GET IN TOUCH?

support@meowanthome.com

MANUFACTURER
Shenzhen Guiyang Network Technology Co., Ltd

ADDRESS
1404K3, East Block, Shengtang Commercial Building,
Futian District, Shenzhen, China

803715

Made In China

Rev_1.0_EN

Meowant

AIR PURIFIER



User Manual

Model: MW-PA08

CONTENT

01 01–03 **IMPORTANT SAFETY INSTRUCTIONS**
Safety Instructions 01
Specifications 03

02 04–06 **EXPLORING AIR PURIFIER**
In the Box 04
Control & Display 05
Air Quality Indicator 06

03 07–11 **USING AIR PURIFIER**
Setting Up 07
Replacing Filter 09

04 12–14 **CARE AND MAINTENANCE**

05 15–16 **TROUBLE-SHOOTING GUIDE**

IMPORTANT SAFETY INSTRUCTIONS

WARNING

READ ALL INSTRUCTIONS BEFORE USE AND SAVE FOR FUTURE REFERENCE

When using an electrical appliance, basic safety precautions should always be followed to reduce the risk of fire, electric shock, and/or injury to persons including the following:

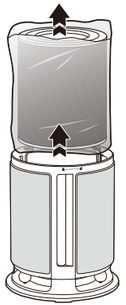

Always ensure the filter is properly installed with plastic wrap removed before use.

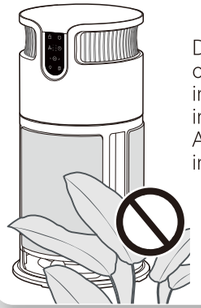

DO NOT cover or block the air inlets or outlets in any manner. Allow at least 8 in of clearance.

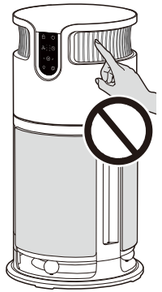

DO NOT insert fingers or any objects through the grille or openings while in operation.

INTENDED USE

- This appliance is not intended for use by persons (including children) with reduced physical, sensory or mental capabilities, or lack of experience and knowledge, unless they have been given supervision or instruction concerning the use of the appliance by person responsible for their safety.
- Close supervision is necessary when any appliance is used by or near children. Children should be supervised to ensure that they do not play with the

appliance. Cleaning and user maintenance shall not be done by children unless they are older than 8 and supervised. Keep the appliance and its cord out of reach of children.

- Use the appliance only for intended household purposes as described in this User Manual. Any other use not recommended by the manufacturer may cause fire, electric shock, or injury to persons.
- **WARNING –** To Reduce The Risk Of Fire Or Electric Shock, Do Not Use This Fan With Any Solid-State Speed Control Device.

ELECTRICITY SAFETY

- **DO NOT** use the appliance with a damaged cord or plug or if it malfunctions, is dropped or damaged in any manner.
- **DO NOT** operate any fan with a damaged cord or plug. Discard fan or return to an authorized service facility for examination and/or repair.
- **DO NOT** use an external power supply other than the one provided with the appliance. Use only the provided power adapter.
- **DO NOT** immerse the appliance, power cord or plug in water or other liquid.
- **DO NOT** touch or hold the plug or operate the control panel with wet hands.
- **DO NOT** let cord hang over edge of table or counter, or touch hot surfaces.
- If the supply cord is damaged, it must be replaced by the manufacturer, its service agent or similarly qualified persons in order to avoid a hazard.

RELATED TO USE

- **DO NOT** use the filter as fuel or for similar purposes.
- **DO NOT** use the air purifier in an enclosed space where flammable, combustible or explosive gases are present.
- Always place and use the air purifier on a dry, stable, level, and horizontal surface. Arrange the air purifier and cord away from traffic areas and where it will not be knocked over.
- **DO NOT** expose to direct sunlight or other sources of sustained heat. Do not place near any heat sources such as radiators, heat registers, stoves, etc.
- **DO NOT** place the air purifier directly below an air conditioner to prevent condensation from dripping onto the appliance.
- **DO NOT** place the air purifier directly on or against soft furnishings, such as bedding or curtains, as this could cause the air purifier to block the air inlet or outlet.
- Keep indoors in a cool, dry location. Reduce exposure to high temperature and humidity.
- **DO NOT** sit on or place any object on top of the air purifier.
- **DO NOT** allow pets to chew on or swallow any parts. Cover or hide the power cord with care to prevent pets from biting.
- **DO NOT** allow anything to rest on the power cord. Do not plug in power adapter in an area where people or animals may walk or trip on cord.
- **DO NOT** run cord under carpeting. Do not cover cord with throw rugs, runners, or similar coverings. Do not route cord under furniture or appliances. Arrange cord away from traffic area and where it will not be tripped over.

- **DO NOT** attempt to disassemble, repair, modify or replace any part of the appliance. No user serviceable parts inside. All servicing should be performed by qualified personnel only.
- To reduce the risk of fire, electric shock, or injury to persons, do not use replacement parts that have not been recommended by the manufacturer (e.g., parts made at home using a 3D printer).
- Always turn off and unplug the air purifier before moving, opening the covers or changing the filter.
- Always turn off and unplug the air purifier before cleaning, making any repairs or servicing, or whenever not in use. To disconnect, turn it off, then remove the plug from the outlet. Do not pull on cord.
- Dispose of all packaging materials properly. Keep away from children and pets. Keep plastic bags away from babies and small children. Do not use in cribs, beds, carriages or play pens.

FOR HOUSEHOLD USE ONLY
READ AND SAVE THESE INSTRUCTIONS

Specifications

Rated Voltage	24V ⎓
Rated Power	38W
Power Adapter	Input: 100-240V~ 50/60Hz 1.0A Output: 24V ⎓ 2A

EXPLORING AIR PURIFIER

In the Box

Check if all parts and accessories are included. Contact us via **email: support@meowanthome.com** if there is any part missing or damaged.

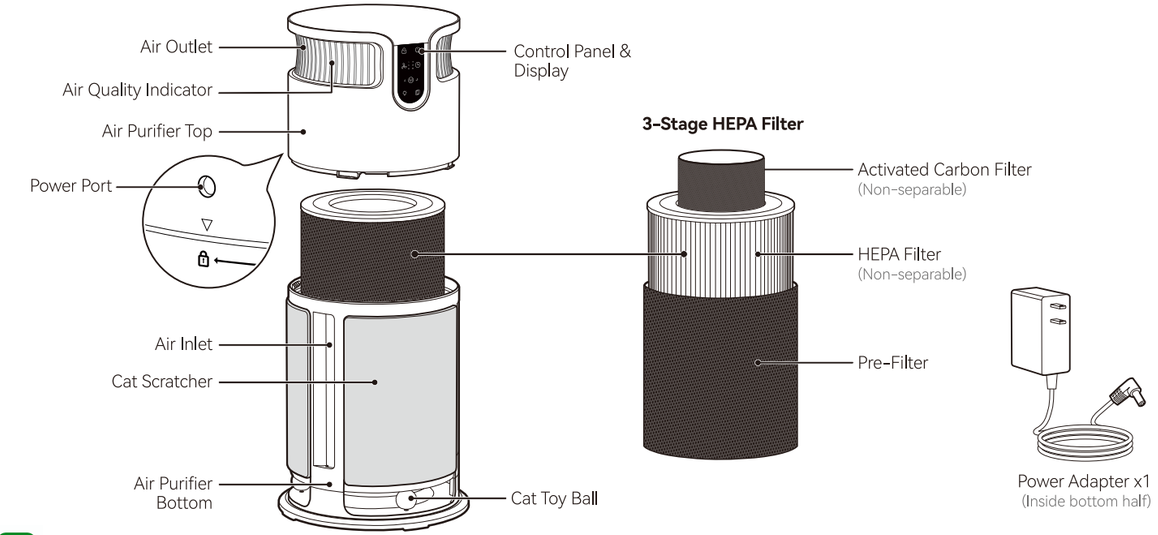

Control & Display

ON / OFF
- Press once to turn the air purifier on (Auto mode on by default).
- Press once again to turn the air purifier off.

Fan Speed
- With air purifier on, press repeatedly to cycle through 3 fan speeds: ~ → ≈ → ≋ → ~ ...
- Adjusting fan speed in Auto or Sleep mode automatically cancels Auto or Sleep mode.

Auto Mode / Sleep Mode
- With air purifier on, press to select Auto or Sleep mode.
- Once Auto mode is enabled, the air purifier automatically adjusts the fan speed based on the air quality.
- Once Sleep mode is enabled, the air purifier automatically runs at low fan speed with display and indicator dimmed.

Child Lock
With air purifier on, press and hold for 2 seconds to turn on or cancel child lock.

Auto OFF Timer
With air purifier on, press repeatedly to set a time to turn off automatically: 1h → 4h → 8h → 0h.

Air Quality Indicator
With air purifier on, press to turn on or off air quality indicator.

Reset Filter
When the filter reaches its service life (1600 hours), will flash red. Replace the filter and reset the filter life by holding the button for 5 seconds.

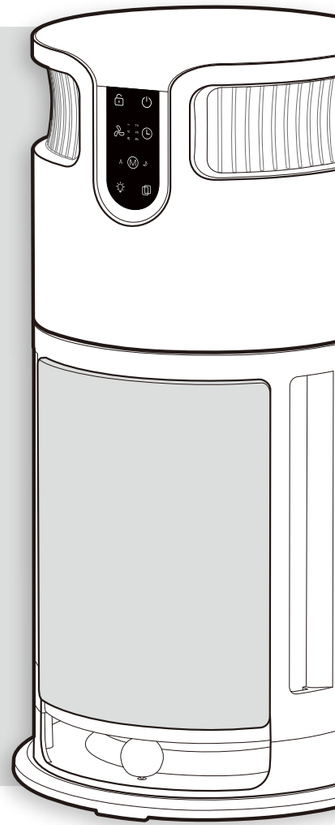

Air Quality Indicator

Upon startup, the air quality indicator light will cycle through blue, green, purple, and red for 20 seconds. Then the air quality sensor begins monitoring and the fan speed will adjust automatically based on the real-time air quality.

Indicator Color	PM2.5 (μg/m³)	Air Quality	Fan Speed
Blue	0-50	Excellent	~
Green	51-100	Good	≈
Purple	101-150	Moderate	≈
Red	151-500	Poor	≈

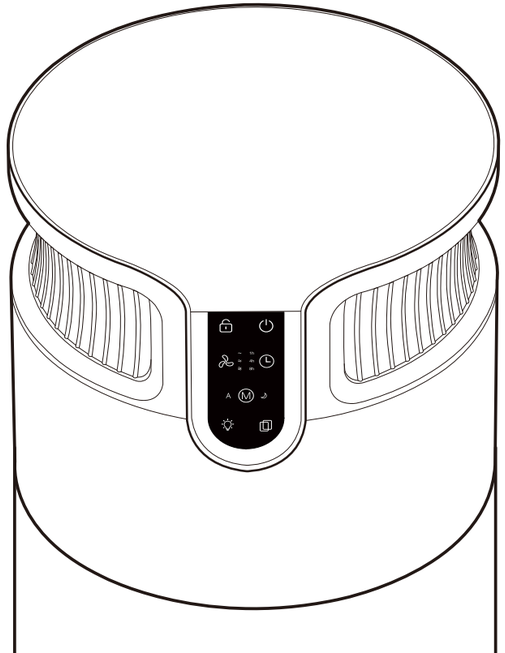

USING AIR PURIFIER

Setting Up

- **IMPORTANT: Remove the plastic wrap from the filter before use.**
- Always ensure that the filter and top half of the air purifier are properly installed in place before use.

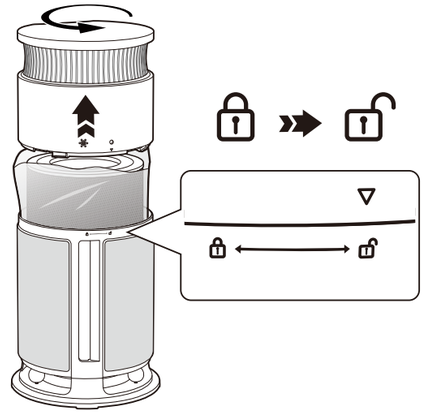

Place the air purifier on a flat, stable surface. Twist the top half of the air purifier to 🔓 position and lift it up to remove.

1

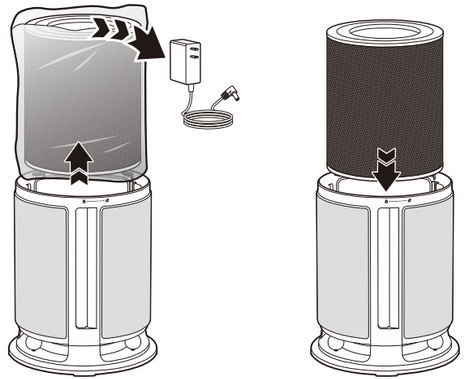

Take the filter and power adapter out. Remove the plastic wrap from the filter and place the filter back into the air purifier.

* Discard and do not allow children to play with the plastic wrap.

2

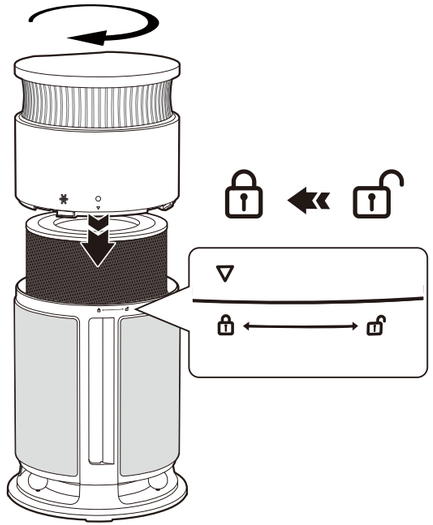

Align the arrow with unlock icon and attach the top half of the air purifier back. Twist to position to lock the top half in place.

3

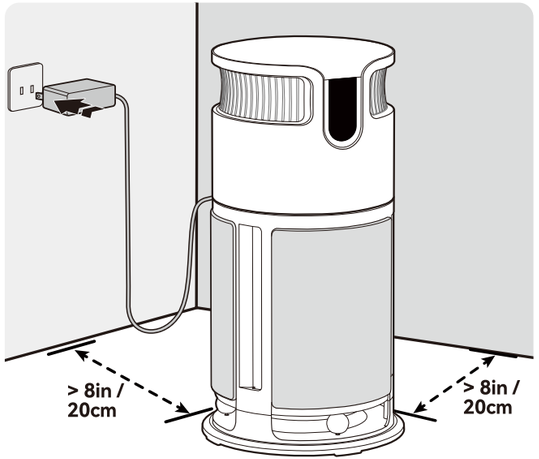

Locate the air purifier with enough circulation space around (> 8 inches). Plug in the air purifier.

4

Replacing Filter

- When the filter reaches its service life (1600 hours), will flash red as a reminder to replace the filter.
- Turn off and unplug the air purifier before replacing the filter.
- Using your purifier in heavily polluted or dusty environments may cause the filter to clog faster, reducing its lifespan. To maintain optimal performance, clean and replace the filter more frequently.

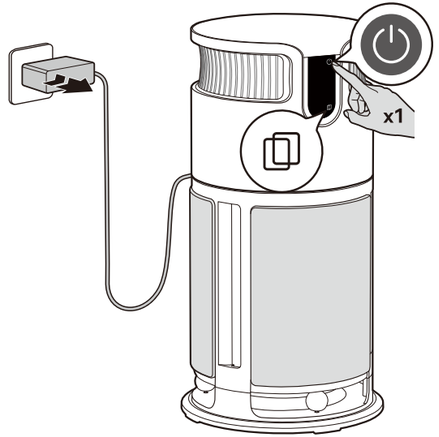

will flash red as a reminder to replace the filter. Press once to turn off and unplug the air purifier.

1

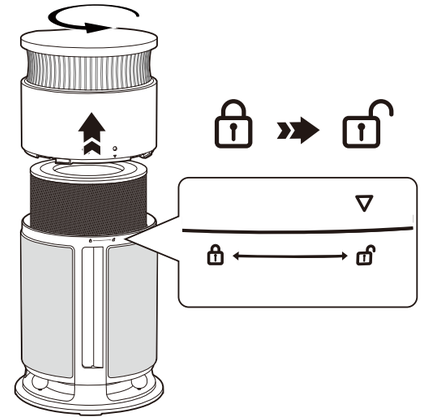

Twist the top half of the air purifier to position and lift it up to remove.

2

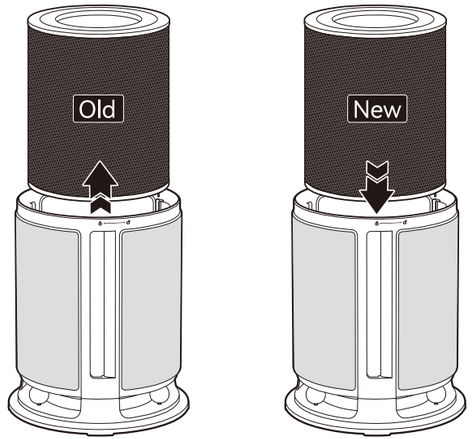

Remove the old filter and place a new one in the air purifier.

3

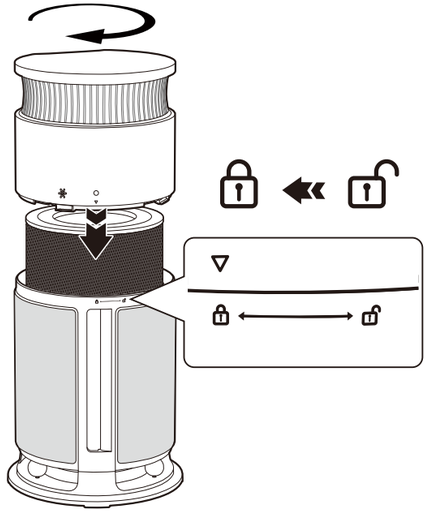

Align and attach the top half of the air purifier back. Twist to position to lock the top half in place.

4

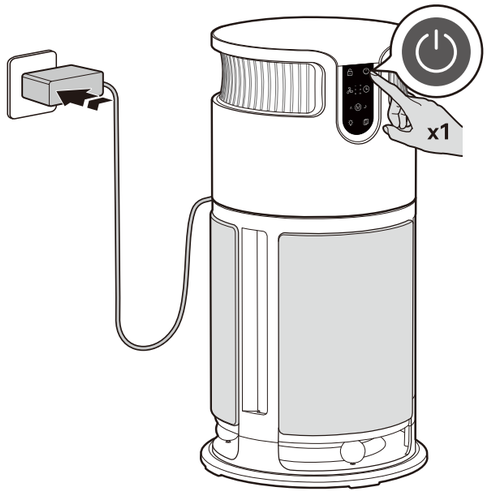

Plug in and press once to turn on the air purifier.

5

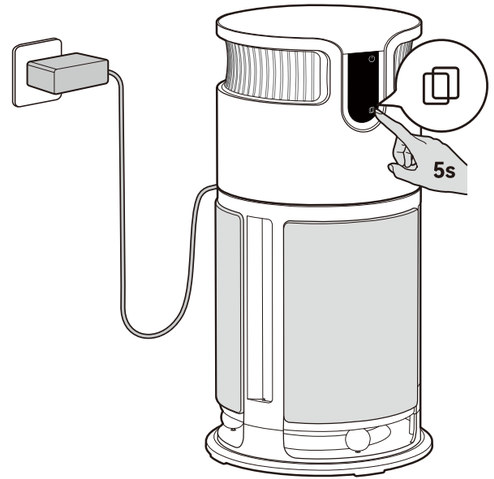

Press and hold for 5 seconds until you hear an audible chime to reset the filter life.

6

CARE AND MAINTENANCE

- Always make sure the air purifier is turned off and unplugged before cleaning.
- DO NOT stick any foreign objects or your fingers inside of the air purifier.
- Never immerse in water or allow water to drip into the motor housing.
- DO NOT clean with abrasive chemicals or flammable cleaning agents.

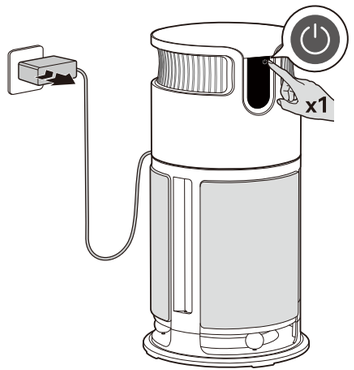

Press ⏻ once to turn off and unplug the air purifier.

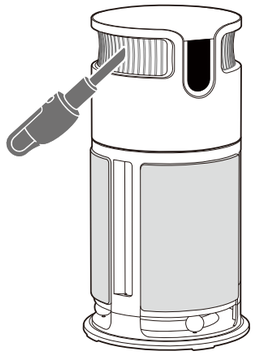

Remove the filter. Vacuum up dust with a vacuum cleaner.

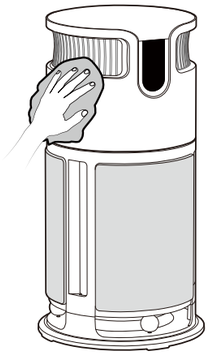

Wipe the surface with a soft, dry cloth. If necessary, wipe with a damp cloth, then immediately dry.

Cleaning HEPA Filter & Pre-Filter

- Clean the pre-filter when particles are visible or excessive noises are heard. It is recommended to clean every 2 to 4 weeks.
- Using your purifier in heavily polluted or dusty environments may cause the filter to clog faster, reducing its lifespan. To maintain optimal performance, clean and replace the filter more frequently.

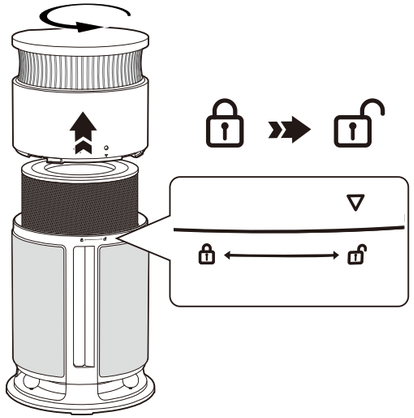

Twist the top half of the air purifier to 🔓 position and lift it up to remove the filter.

1

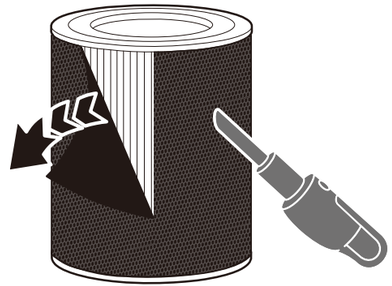

Gently remove the pre-filter from the HEPA filter. Clean the pre-filter with a vacuum cleaner or a soft, dry brush. If heavily soiled with dust and debris, rinse it with water. Air dry thoroughly before attaching it back.

2



Vacuum up dust on the HEPA filter with a vacuum cleaner. Do not rinse or immerse in water. Replace the filter when service life is reached.

3

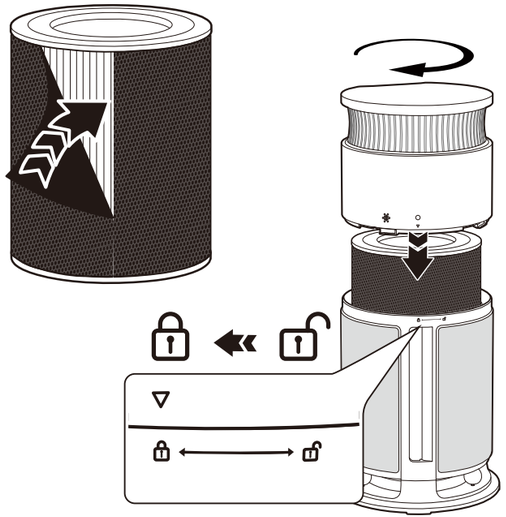

Attach the pre-filter back to the HEPA filter. Place the whole filter back in the air purifier. Align and attach the top half of the air purifier back. Twist to 🔒 position to lock the top half in place.

4

TROUBLESHOOTING GUIDE

The troubleshooting guide addresses the most common problems. If problems persist, feel free to contact the Customer Support via **email: support@meowanthome.com**

Problem	Solution
Air purifier does not turn on or respond to button controls.	• Ensure that the air purifier is properly connected to a powered electrical outlet. • Ensure that the power adapter is firmly plugged into the power port. • Check if the power cord is damaged. Stop using the air purifier if damaged and contact our Customer Support for help. • Check if child lock is turned on. Press and hold child lock button for 2 seconds to cancel.
Airflow is significantly reduced.	• Ensure that the filter is removed from the packaging and properly installed in place. • Leave at least 8 inches / 20 cm of clearance around the air purifier. Ensure enough circulation space. • Adjust to a higher fan speed. • The pre-filter may be clogged by large particles, such as hair or lint, blocking airflow. Clean the pre-filter. • Check if the filter reaches its service life. Replace the filter if necessary.
Strange smell coming from air purifier.	• Check and clean the filter. Replace the filter if necessary. • Make sure not to use your air purifier in an area with high humidity. High humidity levels may cause mildew to grow on the filter.

Air purifier makes an unusual noise while the fan is on.	• Ensure that the filter is properly installed in place with plastic wrap removed. • Ensure that the top half of the air purifier is properly installed in place. • Ensure that the air purifier is operating on a hard, flat, level surface. • Check and clean the filter. Replace the filter if necessary. • Remove the top half and filter to check if there is any foreign object inside the air purifier.
Poor air purification quality.	• Adjust to a higher fan speed. • Ensure that no objects are blocking the front, rear or top of the air purifier (inlet or outlet). • Ensure that the filter is properly installed in place with plastic wrap removed. • Check and clean the filter. Replace the filter if necessary. • For optimal purification performance, close doors and windows while using the air purifier. • If the room is too large, air purification will take longer.
Cat scratcher curls up or peels a bit.	With extended use, the edges of the cat scratcher may curl up or peel away from the surface. This is normal. Simply press firmly down on the lifted area for a few seconds. To replace the cat scratcher, peel the backing paper off the new cat scratcher and stick it firmly onto the air purifier.
How to get replacement filter or cat scratcher?	For replacement filter and cat scratcher, search for MeoWant replacement filter or cat scratcher on Amazon or contact our Customer Support via **email: support@meowanthome.com.** DO NOT use replacement filter or cat scratcher that is not recommended by the manufacturer.

FCC Compliance

This device complies with Part 15 of the FCC Rules. Operation is subject to the following two conditions:
(1) this device may not cause harmful interference, and
(2) this device must accept any interference received, including interference that may cause undesired operation.

Correct Disposal of This Product (Waste Electrical & Electronic Equipment)
(Applicable in countries with separate collection systems)

This marking on the product, accessories or literature indicates that the product and its electronic accessories should not be disposed of with other household waste at the end of their working life. To prevent possible harm to the environment or human health from uncontrolled waste disposal, please separate these items from other types of waste and recycle them responsibly to promote the sustainable reuse of material resources. Household users should contact either the retailer where they purchased this product, or their local government office, for details of where and how they can take these items for environmentally safe recycling. Business users should contact their supplier and check the terms and conditions of the purchase contract. This product and its electronic accessories should not be mixed with other commercial wastes for disposal.