Bäumr-AG®



TR3 Line Trimmer

User Manual

[Revision 1.0]

READ THIS MANUAL CAREFULLY BEFORE USE – FAILURE TO DO SO MAY RESULT IN INJURY, PROPERTY DAMAGE AND MAY VOID WARRANTY. • KEEP THIS MANUAL FOR FUTURE REFERENCE. • Products covered by this manual may vary in appearance, assembly, inclusions, specifications, description, and packaging.

THE BATTERY MAY HAVE SOME CHARGE ON ARRIVAL, IT IS IMPORTANT HOWEVER THAT THE BATTERY IS CHARGED PRIOR TO USE.

Safety

Safety messages are designed to alert you to possible dangers or hazards that could cause death, injury or equipment or property damage if not understood or followed. Safety messages have the following symbols:



You WILL be KILLED or SERIOUSLY INJURED if you do not follow instructions.



You CAN be KILLED or SERIOUSLY INJURED if you do not follow instructions.



You CAN be INJURED if you do not follow instructions or equipment damage may occur.

It is vital that you read and understand this user manual before using the product, including safety warnings, and any assembly and operating instructions. Keep the manual for future reference.

Safety precautions and recommendations detailed here must be fully understood and followed to reduce the risk of injury, fire, explosion, electrical hazard, and/or property damage.

Safety information presented here is generic in nature – some advice may not be applicable to every product. The term "equipment" refers to the product, be it electrical mains powered, battery powered or combustion engine powered.

- **Before Use** - If you are not familiar with the safe operation/handling of the equipment or are in any way unsure of any aspect of suitability or correct use for your application, you should complete training conducted by a person or organization qualified in safe use and operation of this equipment, including fuel/electrical handling and safety.
- Do NOT operate the equipment in flammable or explosive environments, such as in the presence of flammable liquids, gases, or dust. The equipment may create sparks or heat that may ignite flammable substances.
- Keep clear of moving parts.
- Equipment may be a potential source of electric shock or injury if misused.
- Do NOT operate the equipment if it is damaged, malfunctioning or is in an excessively worn state.
- Do NOT allow others to use the equipment unless they have read this manual and are adequately trained.
- Keep packaging away from children - risk of suffocation! Operators must use the equipment correctly. When using the equipment, consider conditions and pay due care to persons and property.

General Work Area Safety

- Work areas should be clean and well it.
- Do not operate the equipment if bystanders, animals etc are within operating range of the equipment or the general work area.
- If devices are provided for connecting dust extraction / collection facilities, ensure these are connected and used properly. Dust collection can reduce dust-related hazards.

General Personal Safety

- Wear appropriate protective equipment when operating, servicing, or when in the operating area of the equipment to help protect from eye and ear injury, poisoning, burns, cutting and crush injuries. Protective equipment such as safety goggles, respirators, non-slip safety footwear, hard hat, hearing protection etc should be used for appropriate equipment / conditions. Other people nearby should also wear appropriate personal protective equipment. Do not wear loose clothing or jewellery, which can be caught in moving parts. Keep hair and clothing away from the equipment.
- Stay alert and use common sense when operating the equipment. Do not over-reach. Always maintain secure footing and balance.
- Do not use the equipment if tired or under the influence of drugs, alcohol, or medication.
- This equipment is not intended for use by persons with reduced physical, sensory, or mental capabilities.

General Fuel Safety

- Petrol/fuel/gasoline is extremely flammable – keep clear of naked flames or other ignition sources.
- Do not spill fuel. If you spill fuel, wipe it off the equipment immediately – if fuel gets on your clothing, change clothing.
- Do NOT smoke near fuel or when refuelling.
- Always shut off the engine before refuelling.
- Do NOT refuel a hot engine.
- Open the fuel cap carefully to allow any pressure build-up in the tank to release slowly.
- Always refuel in well-ventilated areas.
- Always check for fuel leakage. If fuel leakage is found, do not start, or run the engine until all leaks are fixed.

General Carbon-Monoxide Safety

- Using a combustion engine indoors **CAN KILL IN MINUTES**. Engine exhaust contains carbon-monoxide – a poison you cannot smell or see.
- Use combustion engines OUTSIDE only, and far away from windows, doors, and vents.

General Equipment Use and Care

- Keep packaging away from children and pets, potential risk of suffocation or choking.
- The equipment is designed for domestic use only.
- Handle the equipment safely and carefully.
- Before use, inspect the equipment for misalignment or binding of moving parts, loose components, damage, or any other condition that may affect its operation. If damaged, have the equipment repaired by an authorised service centre or technician before use.
- Prevent unintentional starting of the equipment - ensure equipment and power switches are in the OFF position before connecting or moving equipment. Do not carry equipment with hands or fingers touching any controls. Remove any tools or other items that are not a part of the equipment from it before starting or switching on.
- Do not force the equipment. Use the correct equipment for your application. Equipment will perform better and be safer when used within its design and usage parameters.
- Use the equipment and accessories etc. in accordance with these instructions, considering working conditions and the work to be performed. Using the equipment for operations different from those intended could result in hazardous situations.
- Always keep equipment components (engines, hoses, handles, controls, frames, housings, guards etc) and accessories (cutting tools, nozzles, bits etc) properly maintained. Keep the equipment clean and, where applicable, properly lubricated.
- Store the equipment out of reach of children or untrained persons. To avoid burns or fire hazards, let the equipment cool completely before transporting or storing. Never place or store the equipment near flammable materials, combustible gases, or liquids etc.
- The equipment is not weather-proof, and should not be stored in direct sunlight, at high ambient temperatures or locations that are damp or humid.
- Do not clean equipment with solvents, flammable liquids, or harsh abrasives.
- For specific equipment safety use and care, see Equipment Safety.

© Baumr-AG

General Electrical Safety

- Inspect electrical equipment, extension cords, power bars, and electrical fittings for damage or wear before each use. Repair or replace damaged equipment immediately.
- Ensure all power sources conform to equipment voltage requirements and are disconnected before connecting or disconnecting equipment.
- When wiring electrically powered equipment, follow all electrical and safety codes.
- Always use a Residual Current Device (RCD) (GFCI) / Earth Leakage Circuit Breaker / Safety Switch when operating this item (electrical items only).
- High voltage / high current power lines may be present. Use extreme caution to avoid contact or interference with power lines. Electrical shock can be fatal.

General Electrical Safety

- Electrically grounded equipment must have an approved cord and plug and be connected to a grounded electrical outlet.
- Do NOT bypass the ON/OFF switch and operate equipment by connecting and disconnecting the electrical cord.
- Do NOT use equipment that has exposed wiring, damaged switches, covers or guards.
- Do NOT use electrical equipment in wet conditions or in damp locations.
- Do NOT use electrical cords to lift, move or carry equipment.
- Do NOT coil or knot electrical cords, and ensure electrical cords are not trip hazards.

General Service Information

- The equipment must be serviced or repaired at authorised service centres by qualified personnel only.
- Replacement parts must be original equipment manufacturer (OEM) to ensure equipment safety is maintained.
- Do NOT attempt any maintenance or repair work not described in this manual.
- After use, the equipment and components may still be hot – allow the equipment to cool and disconnect spark plugs and/or electrical power sources and/or batteries from it before adjusting, changing accessories, or performing repair or maintenance.
- Do NOT adjust while the equipment is running.
- Perform service-related activities in suitable conditions, such as a workshop.
- Replace worn, damaged or missing warning/safety labels immediately.

Child Choking Hazard!



- **WARNING: CHOKING HAZARD - CHILDREN UNDER 8 YRS. CAN CHOKE OR SUFFOCATE ON SMALL PARTS. ADULT SUPERVISION REQUIRED.**
- Carefully inspect anything a baby or child could gain access to, including this product & packaging.
- Dangers include anything of a size that could become stuck or lodged in a baby or child's airway.
- Dangers include things like raw, hard fruit and vegetable pieces, large pieces of meat, bones or sausage skins, popcorn, nuts, hard lollies and corn chips, small magnets and batteries, coins, beads, marbles and small uninflated balloons, broken toys and smaller toys, buttons, keys, and coins. But there are also many more.
- Pay particular attention to accessories, nuts, bolts, screws, washers, caps, covers, loose parts, parts that could be removed or break off, pieces of packaging, staples, tape etc.
- In the case of any doubt, secure the item of concern in an appropriate manner, or completely remove the possibility of access by a baby or child.

HAZARDOUS COMPONENTS!

- **BE AWARE THAT THE EQUIPMENT MAY INCLUDE HAZARDOUS COMPONENTS, SUCH AS BLADES, HOT SURFACES AND MOVING PARTS.**
- **MOVING BLADES CAN CAUSE SERIOUS INJURY AND EVEN DEATH IF USED IMPROPERLY OR WITHOUT SUFFICIENT PPE.**
- **DO NOT USE THIS EQUIPMENT ON UNEVEN SURFACES AND ALWAYS MAINTAIN GOOD BALANCE WHEN USING THIS EQUIPMENT. FAILURE TO DO SO MAY CAUSE SERIOUS INJURY.**
- **MAINTAIN A SECURE GRIP OF THE TRIGGER ASSEMBLY AT ALL TIMES.**

IMPORTANT SAFETY INSTRUCTIONS

WARNING: DUST GENERATED BY SANDING, SAWING, GRINDING, DRILLING AND OTHER CONSTRUCTION ACTIVITIES MAY CONTAIN CHEMICALS THAT CAN CAUSE CANCER, BIRTH DEFECTS OR OTHER REPRODUCTIVE HARM. EXAMPLES INCLUDE:

- Lead from lead-based paints.
- Crystalline silica from bricks, cement and other masonry products.
- Arsenic and chromium from chemically treated timber.

The risk of exposure depends on how often you perform this type of work. To reduce exposure, work in a well-ventilated area and use approved personal protective equipment (PPE), such as a dust mask designed to filter microscopic particles.

WARNING: ONLY USE ACCESSORIES SUPPLIED WITH THIS PRODUCT OR APPROVED BY THE MANUFACTURER. USING OTHER ACCESSORIES MAY INCREASE THE RISK OF INJURY. FOLLOW THE INSTRUCTIONS IN THIS MANUAL WHEN FITTING AND USING ACCESSORIES.

WARNING: THIS PRODUCT MAY EXPOSE YOU TO HAZARDOUS SUBSTANCES, INCLUDING LEAD AND DI(2-ETHYLHEXYL) PHTHALATE (DEHP), WHICH MAY CAUSE CANCER, BIRTH DEFECTS OR OTHER REPRODUCTIVE HARM.

- Only use this product with the power supply unit provided by the manufacturer.

GENERAL POWER TOOL SAFETY WARNINGS

- **WARNING: READ ALL SAFETY WARNINGS AND INSTRUCTIONS. FAILURE TO FOLLOW THESE WARNINGS AND INSTRUCTIONS MAY RESULT IN ELECTRIC SHOCK, FIRE AND/OR SERIOUS INJURY.**
- Keep all warnings and instructions for future reference.
- The term “power tool” in these warnings refers to mains-powered (corded) power tools or battery-powered (cordless) power tools.

WORK AREA SAFETY

- Keep the work area clean and well lit. Cluttered or poorly lit areas increase the risk of accidents.
- Do not operate power tools in explosive atmospheres, such as in the presence of flammable liquids, gases or dust. Power tools may create sparks that can ignite dust or fumes.
- Keep children and bystanders away while operating a power tool. Distractions may cause you to lose control.

ELECTRICAL SAFETY

- Power tool plugs must match the outlet. Never modify the plug in any way. Do not use adaptor plugs with earthed power tools. Unmodified plugs and matching outlets reduce the risk of electric shock.
- Avoid body contact with earthed surfaces, such as pipes, radiators, stoves and refrigerators. There is an increased risk of electric shock if your body is earthed.
- Do not expose power tools to rain or wet conditions. Water entering a power tool increases the risk of electric shock.
- Do not misuse the power cord. Never use the cord to carry, pull or unplug the power tool. Keep the cord away from heat, oil, sharp edges and moving parts. Damaged or entangled cords increase the risk of electric shock.
- When operating a power tool outdoors, use an extension cord suitable for outdoor use. Using a cord suitable for outdoor use reduces the risk of electric shock.
- If operating a power tool in a damp location is unavoidable, use a supply protected by a residual current device (RCD). Using an RCD reduces the risk of electric shock.

PERSONAL SAFETY

- Stay alert, watch what you are doing and use common sense when operating a power tool. Do not use a power tool while tired or under the influence of drugs, alcohol or medication. A moment of inattention while operating a power tool may result in serious personal injury.
- Use personal protective equipment (PPE). Always wear eye protection. Appropriate protective equipment, such as a dust mask, non-slip safety footwear, hard hat or hearing protection, reduces the risk of personal injury.
- Prevent unintentional starting. Ensure the switch is in the OFF position before connecting the tool to a power source, picking it up or carrying it. Carrying a power tool with your finger on the switch, or connecting a power tool while the switch is on, may cause an accident.
- Remove any adjusting key or spanner before switching on the power tool. A key or spanner left attached to a rotating part of the power tool may cause personal injury.
- Do not overreach. Maintain secure footing and balance at all times. This provides better control of the power tool in unexpected situations.
- Dress appropriately. Do not wear loose clothing or jewellery. Keep your hair, clothing and gloves away from moving parts. Loose clothing, jewellery or long hair may become caught in moving parts.
- If devices are provided for connecting dust extraction and collection equipment, ensure they are properly connected and used. Dust collection can reduce dust-related hazards.
- Do not allow familiarity gained from frequent tool use to make you complacent or cause you to ignore safety principles. A careless action can cause serious injury in a fraction of a second.

POWER TOOL USE AND CARE

- Do not force the power tool. Use the correct power tool for the application. The correct power tool will perform the job better and more safely at the rate for which it was designed.
- Do not use the power tool if the switch does not turn it on and off. Any power tool that cannot be controlled with the switch is dangerous and must be repaired.
- Disconnect the plug from the power source and/or remove the battery pack, if detachable, before making adjustments, changing accessories or storing the power tool. These preventive safety measures reduce the risk of accidental starting.
- Store idle power tools out of reach of children. Do not allow anyone unfamiliar with the power tool or these instructions to operate it. Power tools are dangerous in the hands of untrained users.
- Maintain power tools and accessories. Check for misalignment or binding of moving parts, broken parts and any other condition that may affect operation. If damaged, have the power tool repaired before use. Many accidents are caused by poorly maintained power tools.
- Keep cutting tools sharp and clean. Properly maintained cutting tools with sharp cutting edges are less likely to bind and are easier to control.
- Use the power tool, accessories and tool bits in accordance with these instructions, taking into account the working conditions and the task to be performed. Using the power tool for operations other than those intended may create a hazardous situation.
- Keep handles and gripping surfaces dry, clean and free from oil and grease. Slippery handles and gripping surfaces may prevent safe handling and control of the tool in unexpected situations.

BATTERY TOOL USE AND CARE

- Recharge only with the charger specified by the manufacturer. A charger suitable for one type of battery pack may create a fire risk when used with another battery pack.
- Use power tools only with specifically designated battery packs. Using other battery packs may create a risk of injury and fire.
- When the battery pack is not in use, keep it away from metal objects such as paper clips, coins, keys, nails, screws or other small metal objects that may connect one terminal to another. Short-circuiting the battery terminals may cause burns or fire.
- Under abusive conditions, liquid may be ejected from the battery. Avoid contact. If accidental contact occurs, rinse the affected area with water. If the liquid contacts your eyes, seek medical attention. Liquid ejected from the battery may cause irritation or burns.
- Do not use a battery pack or tool that is damaged or modified. Damaged or modified batteries may behave unpredictably and may result in fire, explosion or injury.
- Do not expose a battery pack or tool to fire or excessive temperatures. Exposure to fire or temperatures above 130°C may cause an explosion.

- Follow all charging instructions. Do not charge the battery pack or tool outside the temperature range specified in these instructions. Incorrect charging or charging outside the specified temperature range may damage the battery and increase the risk of fire.

SERVICE

- Have the power tool serviced by a qualified repair technician using only identical replacement parts. This will help ensure the safety of the power tool is maintained.
- Never service damaged battery packs. Battery packs must only be serviced by the manufacturer or an authorised service provider.

SAFETY WARNINGS FOR LINE TRIMMERS AND EDGE TRIMMERS

- Do not use the machine in bad weather, especially when there is a risk of lightning. This reduces the risk of being struck by lightning.
- Thoroughly inspect the area for wildlife before using the machine. Wildlife may be injured during operation.
- Thoroughly inspect the work area and remove all stones, sticks, wires, bones and other foreign objects. Thrown objects may cause personal injury.
- Before using the machine, always visually inspect the cutting head and cutting assembly for damage. Damaged parts increase the risk of injury.
- Keep all guards in place. Guards must be in good working order and properly fitted. A loose, damaged or incorrectly fitted guard may result in personal injury.
- Keep all cooling air inlets clear of debris. Blocked air inlets may cause overheating or increase the risk of fire.
- Wear eye and hearing protection. Appropriate personal protective equipment (PPE) reduces the risk of injury.
- Always wear non-slip, protective footwear while operating the machine. Do not operate the machine barefoot or while wearing open footwear. This reduces the risk of foot injury from contact with the moving cutting line or cutter.
- Always wear clothing, such as long trousers, that covers your legs while operating the machine. Contact with the moving cutting line or cutter may cause injury.
- Keep bystanders away while operating the machine. Thrown debris may cause serious personal injury.
- Do not operate the machine above waist height. This reduces the risk of accidental contact with the cutting line or cutter and provides better control in unexpected situations.
- Exercise caution when operating the machine on wet grass. Walk; never run. This reduces the risk of slipping and falling.
- Do not operate the machine on excessively steep slopes. This reduces the risk of losing control, slipping or falling.
- When working on slopes, maintain secure footing and always work across the slope, never up or down. Exercise extreme caution when changing direction. This reduces the risk of losing control, slipping or falling.
- Keep all power cords and cables away from the cutting area. Cords or cables may be hidden in hedges or bushes and can be accidentally cut or damaged by the cutting line or cutter.
- Carry the machine switched off and away from your body. Proper handling reduces the risk of accidental contact with a moving cutting line or cutter.
- Only use replacement cutting heads, cutters and cutting lines specified by the manufacturer. Do not replace cutting lines or cutters with metal wire or unauthorised blades. Incorrect replacement parts may cause loss of control, breakage or injury.
- Hold the machine only by the insulated gripping surfaces, as the cutting line or cutter may contact hidden wiring. Contact with a live wire may make exposed metal parts of the machine live and cause electric shock.
- Before clearing jammed material or servicing the machine, ensure the switch is off and remove the battery pack. Unexpected starting may result in serious personal injury.

SAFETY WARNINGS FOR BATTERY PACK

- Do not modify, dismantle, open, shred or attempt to repair the battery pack.
- Do not expose the battery pack or appliance to fire or excessive temperatures. Exposure to fire or temperatures above 130°C may cause an explosion.
- Do not short-circuit the battery pack. Do not store battery packs where they may contact each other or metal objects. When the battery pack is not in use, keep it away from paper clips, coins, keys, nails, screws and other small metal objects that could connect one terminal to another. Short-circuiting the terminals may cause burns or fire.
- Do not subject the battery pack to mechanical shock.
- Observe the positive (+) and negative (–) markings on the battery pack and equipment, and ensure correct installation and use.
- Keep the battery pack out of reach of children.
- Only use a battery pack recommended by the manufacturer for this product.
- Keep the battery pack clean and dry.
- If the battery terminals become dirty, wipe them with a clean, dry cloth.
- Charge the battery pack before use. Always use the specified charger or charging cable and follow the charging instructions provided in this manual.
- Do not leave the battery pack charging for prolonged periods when it is not in use.
- After extended storage, it may be necessary to charge and discharge the battery pack several times to achieve maximum performance.
- The battery pack performs best at normal room temperatures of approximately 20°C ± 5°C.
- Use the battery pack only for its intended application. Do not use a battery pack or appliance that is damaged or modified. Damaged or modified batteries may behave unpredictably and may cause fire, explosion or injury.
- Remove the battery pack from the equipment when it is not in use.
- Dispose of the battery pack responsibly and in accordance with local regulations. Do not dispose of batteries in household waste or fire.
- Do not charge the battery pack outdoors, in the rain or in wet locations.

- Recharge only using the charger or charging cable specified by the manufacturer. A charger or charging cable suitable for one type of battery pack may create a fire risk when used with another battery pack.
- Use power tools only with specifically designated battery packs. Using other battery packs may create a risk of injury or fire.
- Under abusive conditions, liquid may be ejected from the battery. Avoid contact. If accidental contact occurs, rinse the affected area with water. If the liquid contacts your eyes, rinse with water and seek medical attention. Liquid ejected from the battery may cause irritation or burns.

SAVE THESE INSTRUCTIONS! Keep these instructions for future reference and use them to instruct anyone who may operate this tool. If you lend the tool to another person, provide these instructions with it to help prevent misuse and possible injury.

© Baumr-AG

Safety Symbols

The product may have safety warning labels attached to it, explained below. Understand the symbols on your product and their meanings. If any stickers become unreadable, unattached etc., replace them.



Flammable Material Hazard
Flammable liquids, gases, or substances etc may present. Avoid ignition sources and open flames. Danger of fire.



Read User Manual
Read and fully understand product safety warnings, operation, procedures etc before using the product.



Use Hand Protection
Wear appropriate hand protection and take due care as the product or use of the product may present hand hazards.



Carbon-Monoxide Hazard
Do not use the product in confined areas or without adequate ventilation. Carbon-monoxide poisoning can be fatal.



Electrocution / Electrical Shock Hazard
High voltage or high current electricity may be present or required by the product. Take due care when handling electrical products, cables, plugs and leads. Electrical shock can be fatal.



Toxic Fumes / Dust Hazard
Using the product or by-products from use may produce fumes, smoke or particles that could be harmful if inhaled. Wear appropriate breathing protection and have adequate ventilation.



Explosive Material Hazard
Combustible liquids, gases, or substances etc may be present. Avoid ignition sources and open flames. Danger of explosion.



Cutting / Amputation Hazard
The product may have blades, edges or mechanical devices that can cause severe cut injury to fingers, limbs etc. Take due care when handling and using the product.



Crush Hazard
The product may have blades, edges or mechanical devices that can cause severe crush injury to fingers, limbs etc. Take due care when handling and using the product.



Single Operator Only
The product must be operated by a single person only. More than one person operating the product may introduce additional hazards.



Use Face Protection
Wear appropriate full-face protection and take due care as the product or use of the product may present face and eye hazards.



Use Foot Protection
Wear appropriate foot protection and take due care as the product or use of the product may present foot hazards.



Use Eye / Ear / Head Protection
Wear appropriate eye and / or ear and / or head protection and take due care as the product or use of the product may present eye, hearing, and head hazards.



Running Hazard
Do not run on or near the product as doing so may present a fall hazard.



Diving Hazard
Do not dive into the product as doing so may present a neck / head injury hazard.



Adult Supervision Required
Always supervise children and other users of a product to prevent drowning or injury.



Skin Penetration / Puncture Hazard
The product may produce pressure, emit liquids or objects that can cause severe injury to fingers, limbs, blood etc. Take due care when handling and using the product.



Hot Surface Hazard
Be aware that the product may produce high temperatures and hot surfaces that can cause burn injuries.



Flying Debris Hazard
Be aware that the product or use of the product may present hazards produced by flying debris. Wear appropriate clothing and protective devices.



Moving Parts Hazard
Be aware that the product contains or uses mechanical devices that move or rotate. Always wait for moving parts to stop fully before handling the product, adjusting, maintenance etc.

© Baumr-AG

 **Carbon-Monoxide Hazard** Do not use the product in confined areas or without adequate ventilation. Carbon-monoxide poisoning can be fatal.	 **Pull Hazard** Be aware that the product contains or uses mechanical devices that can pull in objects and can cause severe injury to fingers, limbs etc. Take due care when handling and using the product.	 **Slope / Fall Injury Hazard** Be aware that using the product on sloping surfaces or in slippery conditions may present additional dangers from falls and contact with blades, moving parts, hot surfaces etc.	 **"Slam Dunk" Warning** Do NOT attempt "slam dunk" manoeuvres as this may result in severe injury due to falling, product breakage or collapse etc.
 **Electrocution / Electrical Shock Hazard - Outdoor** High voltage or high current electricity may be present or required by the product. Do NOT use in rain, damp, or wet conditions. Electrical shock can be fatal.	 **Electrocution / Electrical Shock Hazard - Disconnect** High voltage or high current electricity may be present or required by the product. Always disconnect the product from the electrical supply before handling the product, adjusting, maintenance etc.	 **Power Line Electrocution Hazard** High voltage / high current power lines may be present. Use extreme caution to avoid contact or interference with power lines. Electrical shock can be fatal.	 **"Kick-Back" Hazard** High level of "kick-back" hazard that can cause the machine to suddenly rotate towards operator. Kick-back injury can be fatal.
 **Winch Operator Position Hazard** Do NOT stand between winch and load. Do NOT use winch to move people.	 **Winch Lift Hazard** Do NOT LIFT load vertically. Use machine to PULL only.	 **Cable Hazard** Ensure that load bearing cable is not kinked or knotted.	 **Winch Cable Hazard** Ensure that there is a minimum number of cable coils on winching mechanism.
 **Winch Hook Hazard** Carry hook to load – do NOT throw or run.	 **Flash / Blinding Hazard** Wear appropriate eye protection for welding. Direct exposure to weld arcs may cause permanent eye injury.	 **Laser Hazard** Laser may be in use – do NOT look directly at laser or allow others to.	 **Choking Hazard** Children under 8 yrs. Can choke or suffocate on small parts. Adult supervision required.

Table of Contents

Safety **2**
Safety Symbols 7
Parts Identification **10**
Assembly **12**
Unpacking 12
Assembling the Edging Wheel 12
Assembling the Safety Guard 14
Fitting the Flower Guard 15
Assembling the Auxiliary Handle 15
Installing/Removing the Battery 16
Operation **17**
Charging Your Battery 17
Intended Use 17
Height Adjustment 17
Cutting Angle Adjustment 18
Starting/Stopping the Line Trimmer 19
Changing to Edging Mode 20
Using Your Line Trimmer 21
Using the Flower Guard 22
Automatic Line Feeding 23
Lithium Battery Care and Maintenance **24**
Top 3 Battery Care Requirements 24
Maintenance **26**
General Maintenance 26
Line Trimmer Maintenance 26
Sharpening the Line Cutter 27
Storage **28**
Troubleshooting **29**
Specifications **30**

© Baumr-AG

Parts Identification

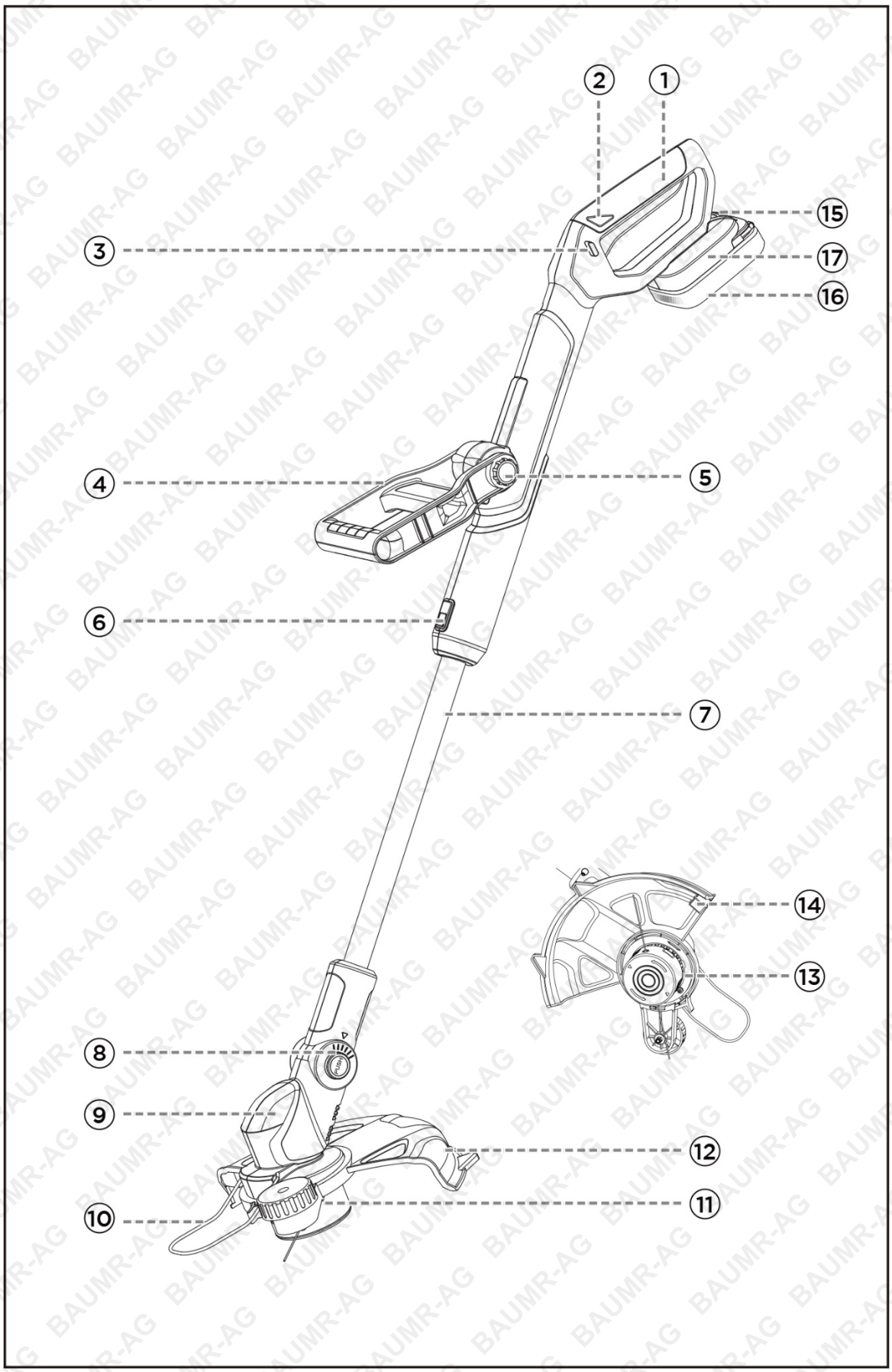

© Baumr-AG

No.	Name	No.	Name
1	Handle	10	Flower Guard
2	On/Off Switch	11	Edging Wheel
3	Lock-Off Button	12	Safety Guard
4	Auxiliary Handle	13	Spool Assembly
5	Auxiliary Handle Rotation Button	14	Line Cutter
6	Shaft Adjustment Button	15	Battery Release Button
7	Telescopic Shaft	16	Battery
8	Head Rotation Button	17	Battery Compartment
9	Trimmer Head		

Assembly

WARNING: To prevent accidental starting and possible serious injury, always remove the battery pack from the tool before assembling or adjusting any parts.

WARNING: Do not modify this tool or use accessories not recommended by the manufacturer. Unauthorised modifications or accessories may create hazardous conditions and result in serious injury.

WARNING: Do not attempt to start the tool until it has been completely assembled.

Unpacking

- This product requires assembly.
- Remove all items from the carton and ensure all items listed in the packing list are included.
- Inspect the tool carefully for any damage that may have occurred during transport.
- Do not discard the packaging until you have inspected the tool and confirmed that it operates correctly.
- If any parts are damaged or missing, contact the manufacturer.

Assembling the Edging Wheel

Installing

Align the edging wheel assembly with the slot on the trimmer head (Fig. 1-1). Rotate the edging wheel assembly to the right along the slot until it locks into place (Fig. 1-2).

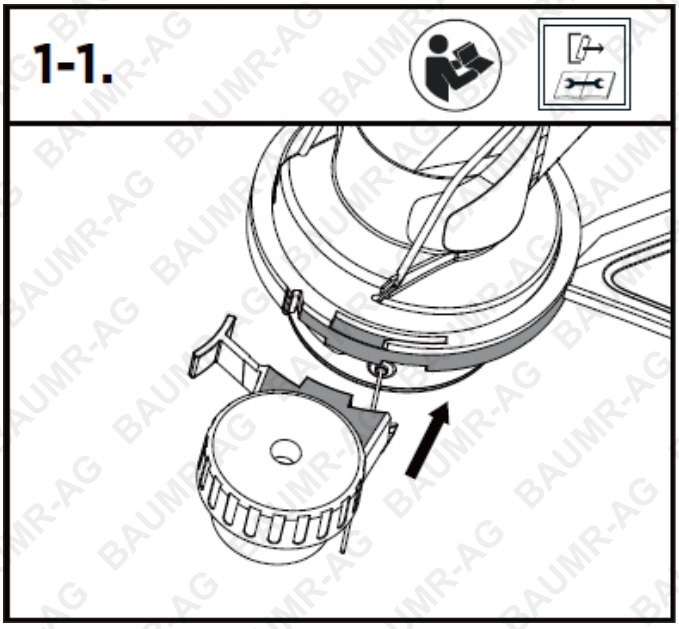

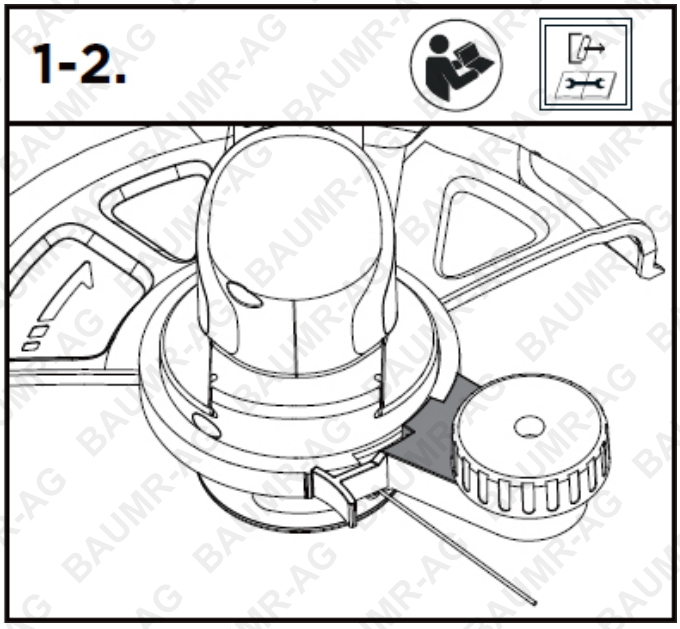

© Baumr-AG

Removing

Press the indicated release point, rotate the edging wheel assembly to the left along the slot (Fig. 2), then lift it out.

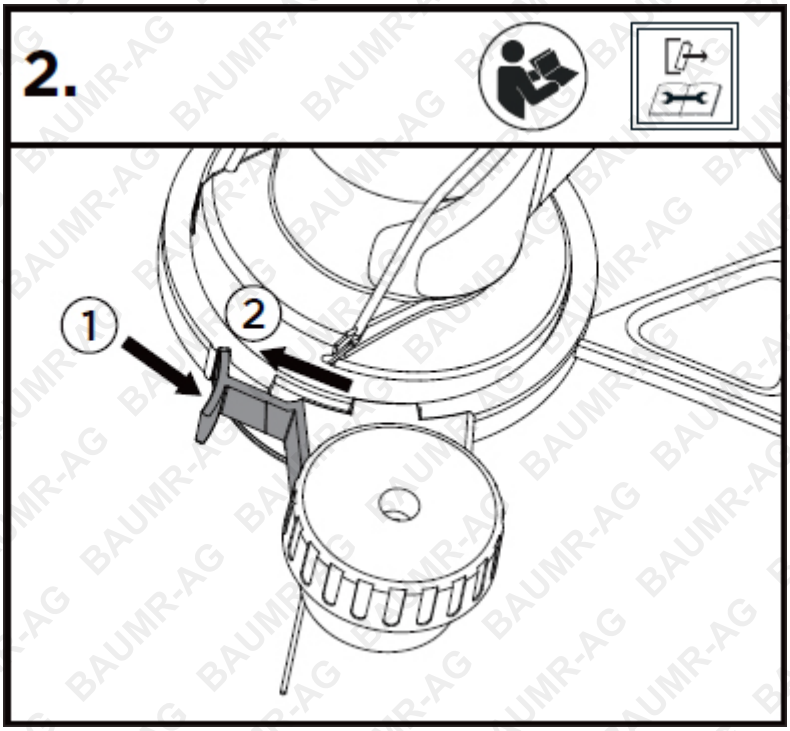

© Baumr-AG

Assembling the Safety Guard

WARNING: NEVER OPERATE THE TOOL WITHOUT THE SAFETY GUARD SECURELY FITTED. The guard must always be properly attached to help protect the user.

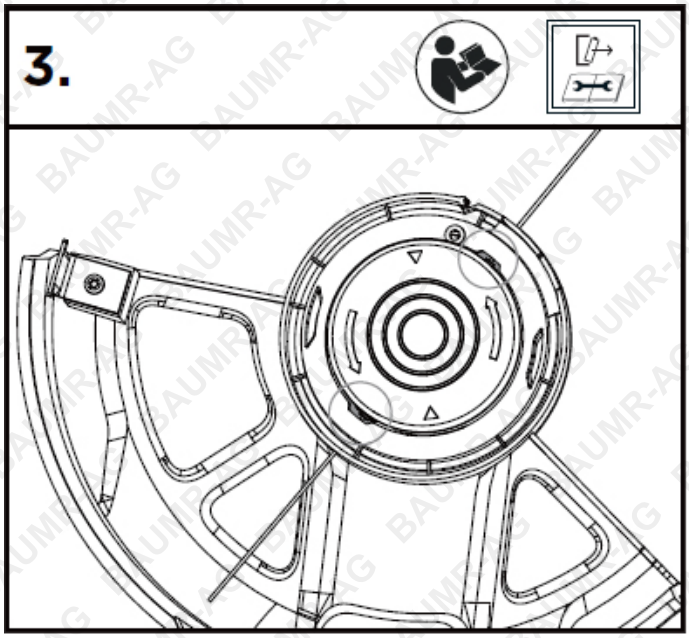

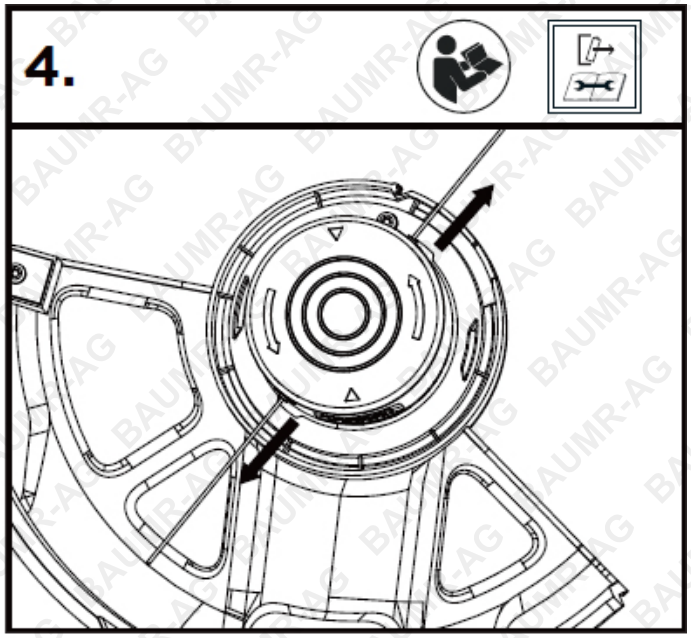

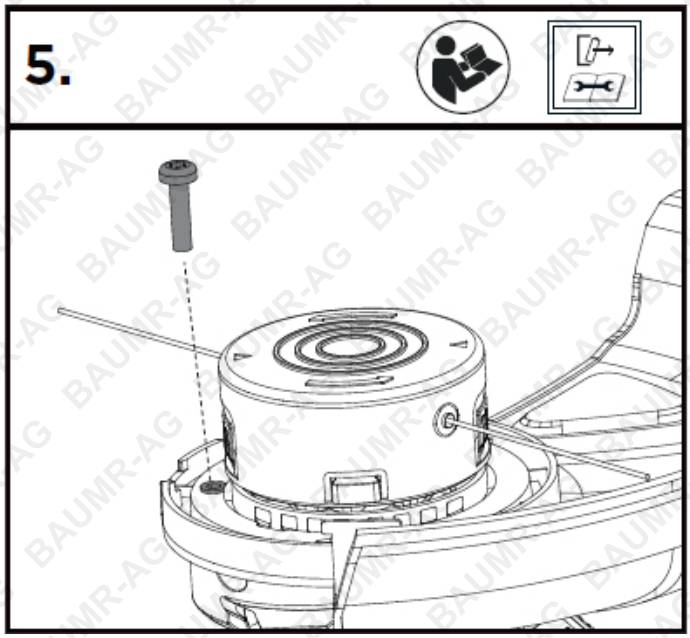

1. Align the two slots on the safety guard with the two cutting lines, then fit the guard into position.
2. Pull both cutting lines through the slots in the guard.
3. Rotate the safety guard until the screw holes align, then secure it with the screw.

© Baumr-AG

Fitting the Flower Guard

Attach the flower guard to the motor housing (Fig. 6).

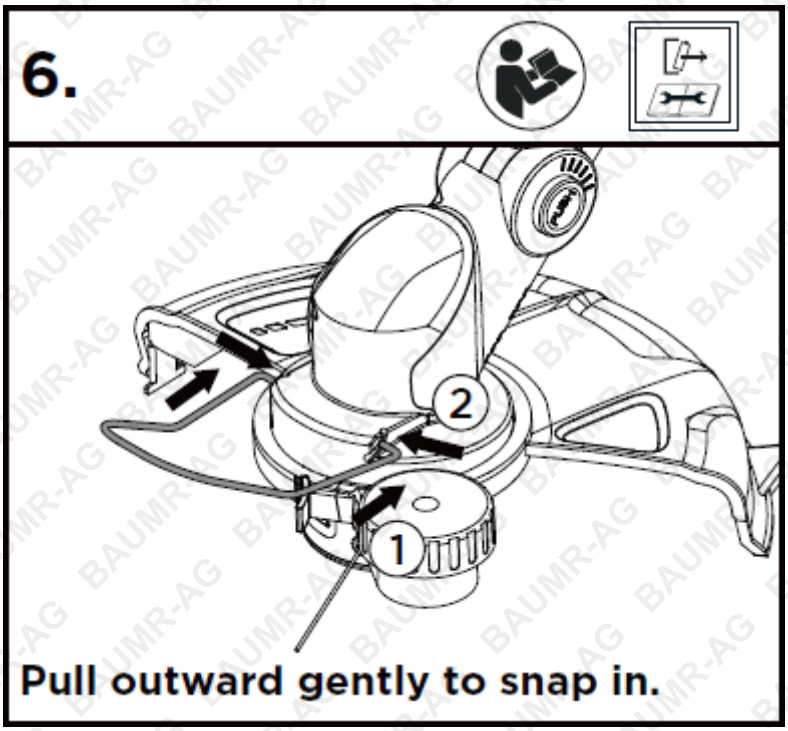

Assembling the Auxiliary Handle

NOTICE: The auxiliary handle can be adjusted to provide optimum balance and comfort.

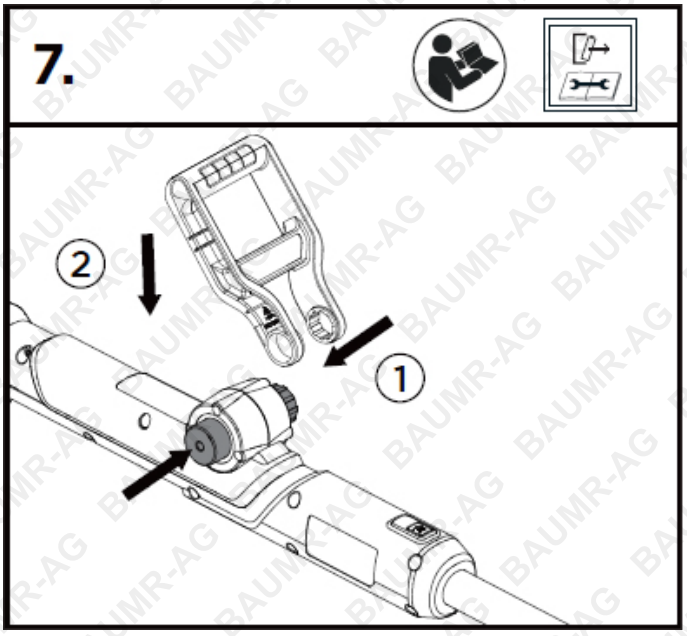

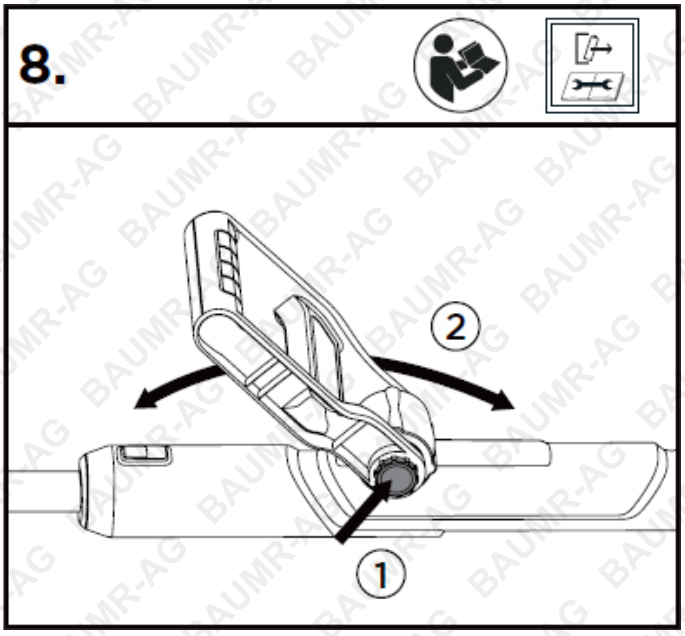

1. To attach the auxiliary handle, press and hold the buttons on both sides of the upper shaft (Fig. 7).
2. Position the auxiliary handle as shown, then push it fully onto the mounting position until it clicks into place. The auxiliary handle can only be installed in the orientation shown.

3. To adjust the auxiliary handle up or down, press the locking button and raise or lower the handle as required (Fig. 8).

Installing/Removing the Battery

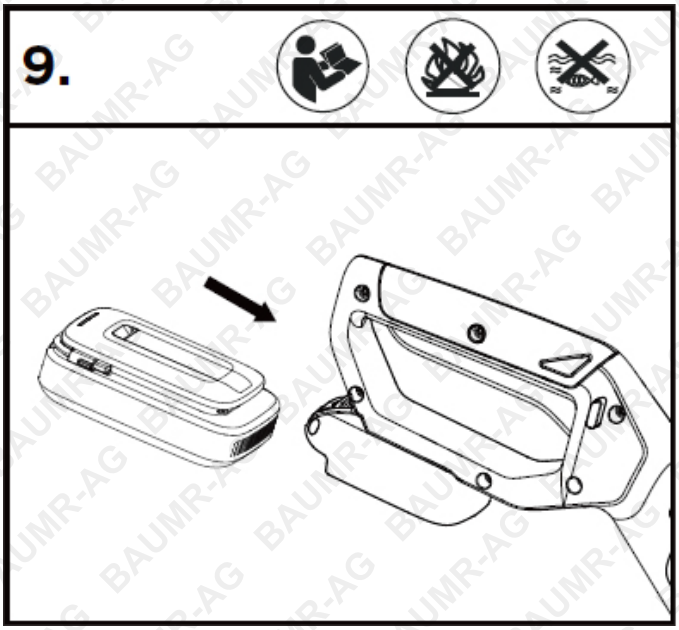

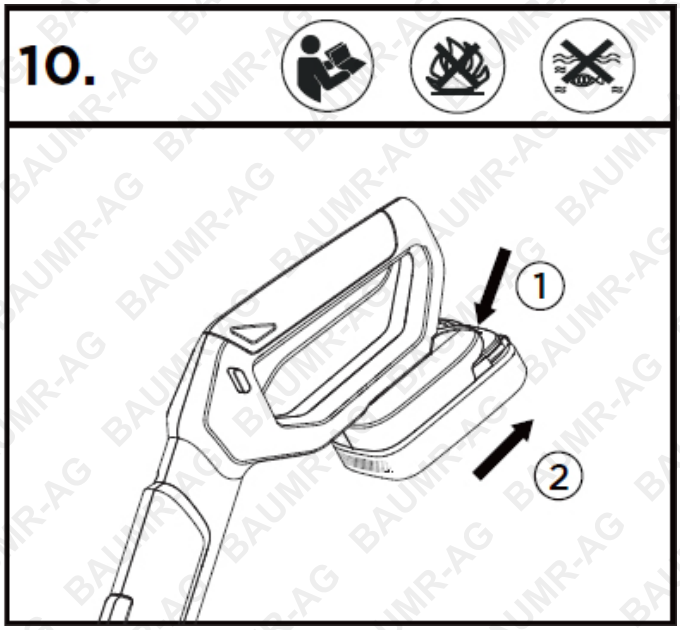

Installing

Slide the battery into the battery compartment in the correct orientation, with the indicator light facing outwards (Fig. 9). Push the battery in until it clicks securely into place.

NOTICE: Do not use excessive force when installing the battery. The battery can only be installed in one orientation.

Removing

Press the battery release button as shown (Fig. 10), then hold the battery and remove it from the tool.

Operation

Charging Your Battery

WARNING: Charge the battery in a dry, well-ventilated area, away from combustible materials and ignition sources.

NOTICE: A charger is not supplied with this appliance. Use a compatible charger with the supplied charging cable. Ensure the charger meets the charging requirements of the battery pack. If you have any questions, contact the manufacturer for assistance.

NOTICE: Lithium-ion batteries are supplied partially charged. Fully charge the battery before first use.

NOTICE: Refer to the Charging Your Battery section for information about indicator lights and charging requirements.

Intended Use

This line trimmer is intended for trimming and edging grass and light vegetation.

NOTICE: Avoid prolonged continuous operation. Allow the product to rest periodically. Avoid striking foreign objects such as posts, fences and walls.

WARNING: Do not allow familiarity with this product to make you careless. A moment of inattention may result in serious injury.

WARNING: Do not use attachments or accessories not recommended by the manufacturer. Using unauthorised attachments or accessories may result in serious personal injury.

WARNING: Keep the work area clear of stones, toys and other foreign objects that may be thrown by the cutting line. Objects may be hidden by grass and are easy to overlook. Thoroughly inspect the work area before starting.

WARNING: Ensure the trimmer head is securely locked in position before starting the tool.

Height Adjustment

NOTICE: Adjust the trimmer length to provide a comfortable working position and for convenient storage.

The telescopic shaft has three selectable length positions.

Press and hold the shaft adjustment button, then extend or retract the telescopic shaft to the required position. Release the button and ensure the shaft locks securely into place (Fig. 11).

© Baumr-AG

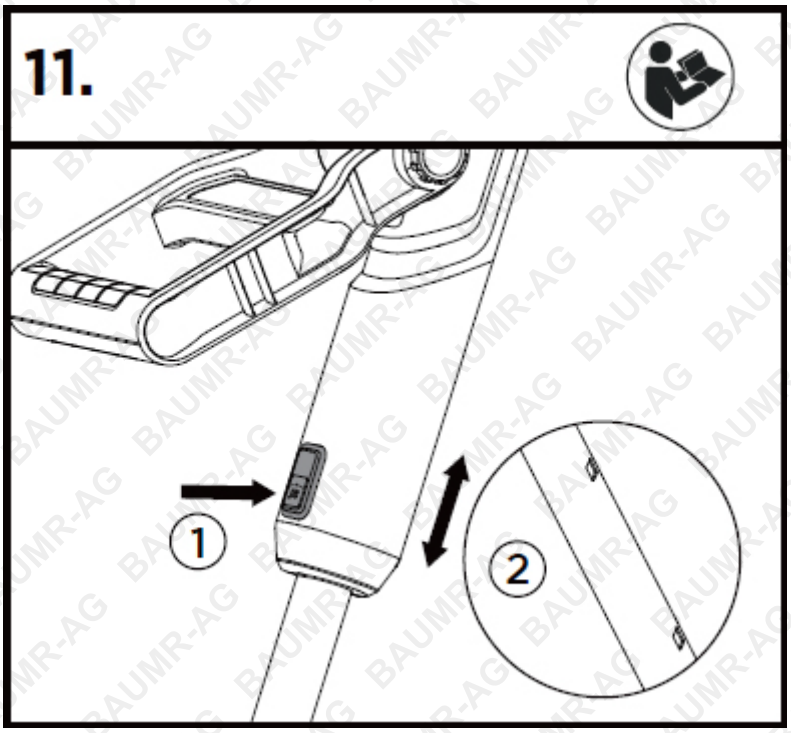

Cutting Angle Adjustment

1. Press and hold the head rotation button.
2. Tilt the trimmer head to the required position. Five positions are available: **−30°, −15°, 0°, 15° and 30°** (Fig. 12).

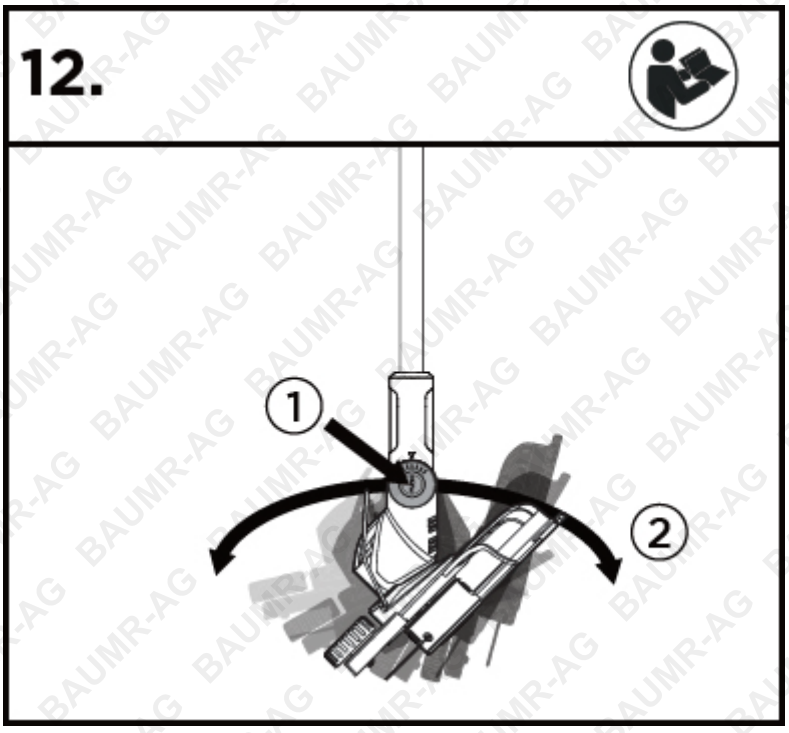

3. Release the button and ensure the trimmer head clicks securely into the selected position.

© Baumr-AG

Starting/Stopping the Line Trimmer

Before Starting

- Ensure you have secure and balanced footing.
- Hold the line trimmer firmly with both hands: one hand on the rear handle and the other on the auxiliary handle.

Starting the Line Trimmer

WARNING: Before starting, ensure you and the line trimmer are in a stable position.

Press and hold the **Lock-Off Button**, then squeeze and hold the **On/Off Switch**. Once the tool starts, release the Lock-Off Button (Fig. 13).

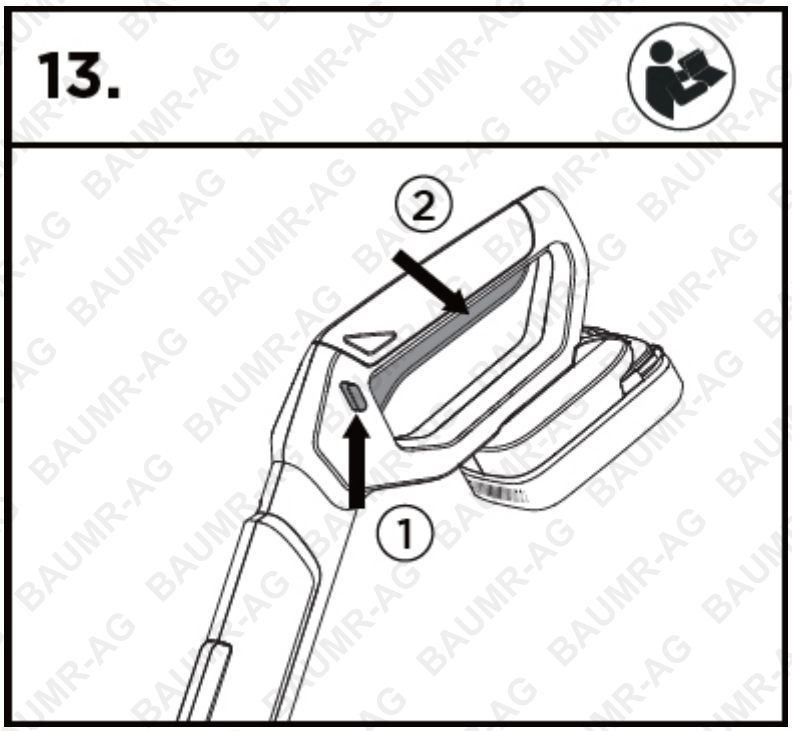

NOTICE: The tool will only operate when the Lock-Off Button and On/Off Switch are activated in the correct sequence.

Stopping the Line Trimmer

Release the On/Off Switch. Wait until the trimmer head and cutting line have come to a complete stop.

© Baumr-AG

Changing to Edging Mode

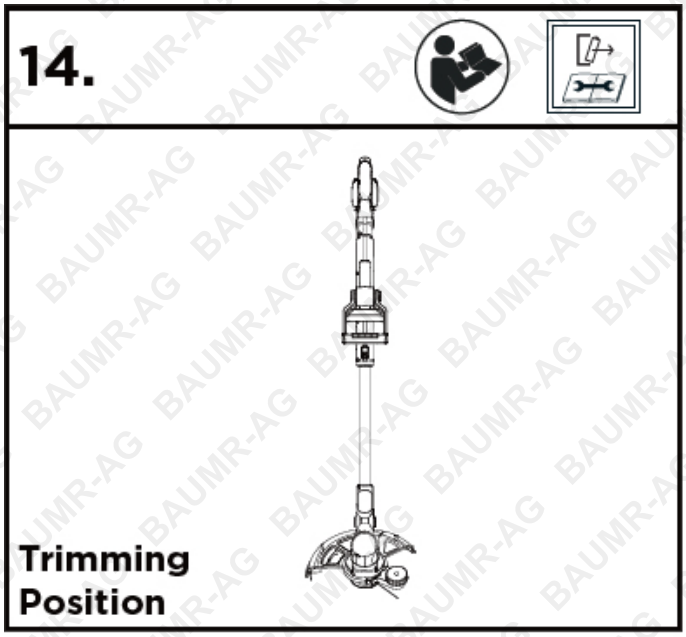

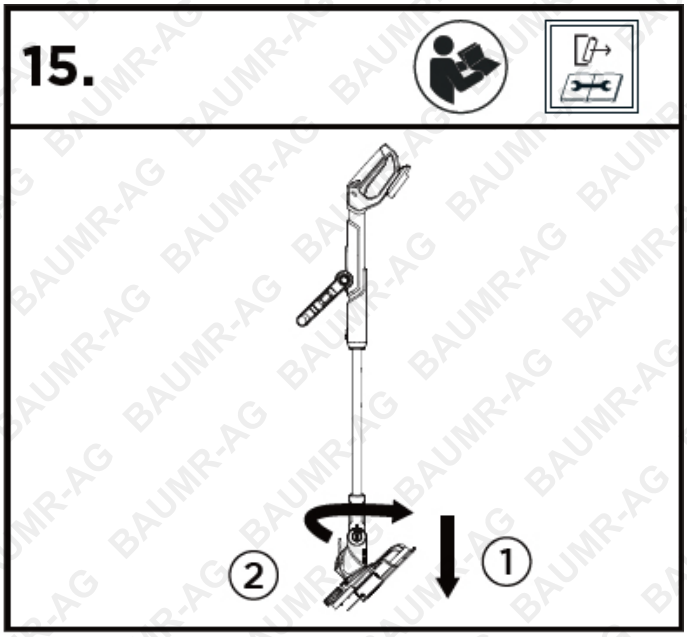

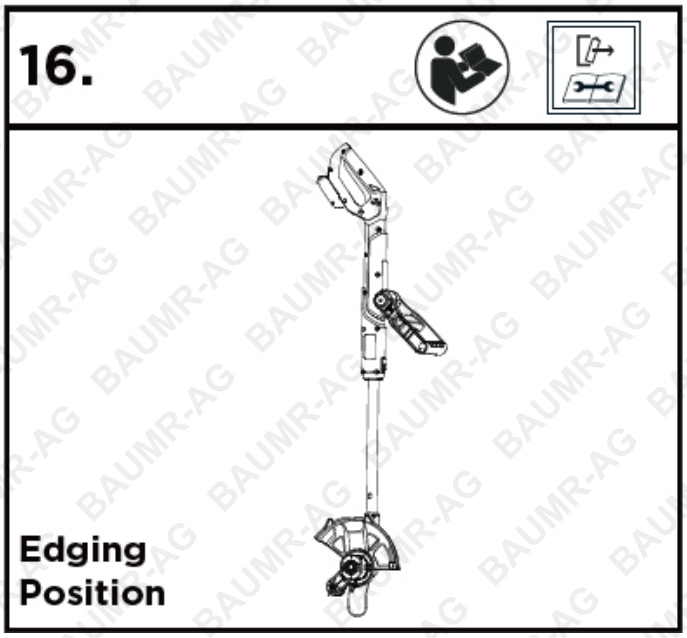

WARNING: To reduce the risk of personal injury, switch off the line trimmer before adjusting the trimmer head.

WARNING: Ensure the trimmer head is securely locked in position before starting the line trimmer.

1. Pull the shaft forward as indicated, then rotate it clockwise by **90°**.
2. Release the shaft and ensure it automatically locks securely into place.

NOTICE: The shaft rotates in one direction only.

Using Your Line Trimmer

Hold the line trimmer away from your body with both hands and maintain secure footing on a firm, stable surface.

Using as a Line Trimmer

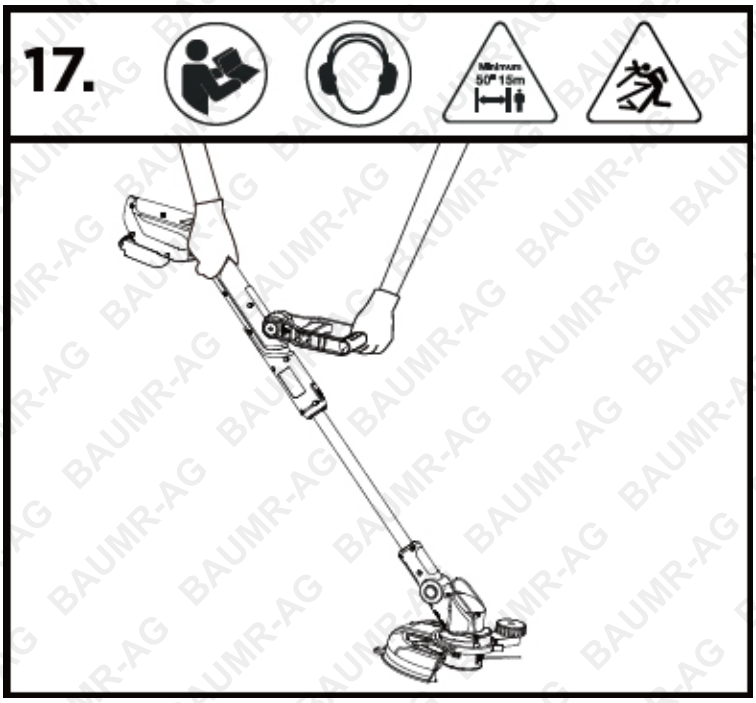

Grip both handles firmly. Move the trimmer slowly and steadily from side to side using a sweeping motion.

Using as an Edge Trimmer

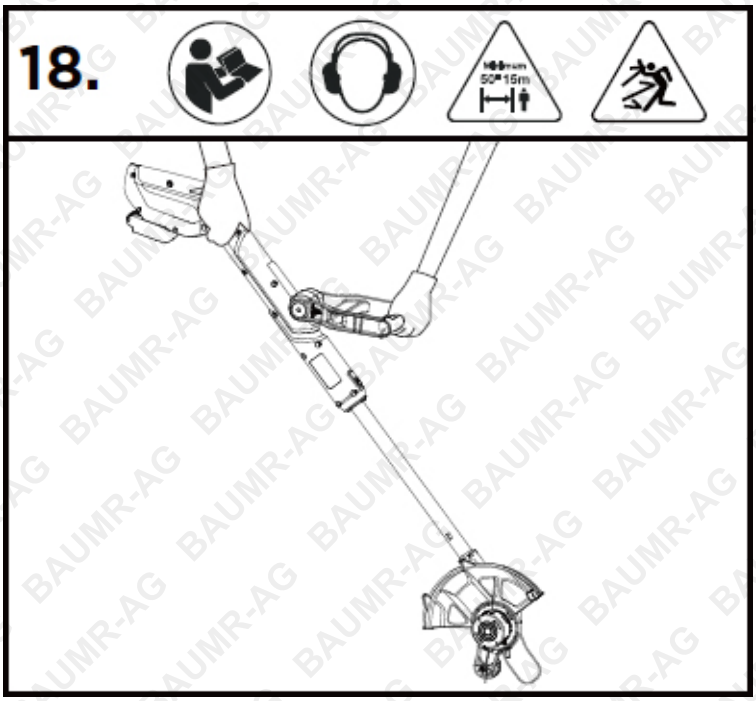

Rest the trimmer on the edging wheel. Grip both handles firmly with the shaft rotated to the edging position, then move the trimmer slowly along the edge of the lawn.

© Baumr-AG

WARNING: Risk of electric shock. Be aware of the location of garden power cables and other electrical cables.

WARNING: To reduce the risk of personal injury, always wear eye protection. Personal protective equipment (PPE), such as sturdy gloves and non-slip footwear, is also recommended.

WARNING: Be aware of the risk to bystanders within the operating area of the line trimmer.

Always take care when other people are nearby. The line trimmer may throw stones and debris at high speed.

Do not overload the line trimmer. Forcing the tool may damage the motor. Trim long or dense vegetation in several light passes.

Do not allow rotating parts to contact or grind against the ground, as this may cause premature wear and damage the line trimmer.

Using the Flower Guard

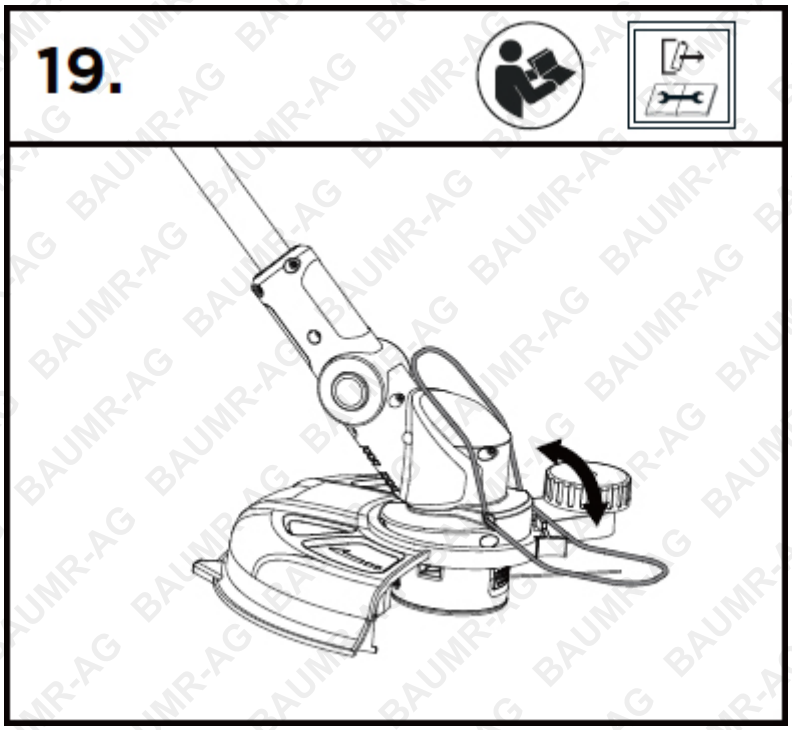

NOTICE: The flower guard helps keep the cutting assembly away from plants, shrubs and other objects.

- Before trimming or edging, lower the flower guard as shown.
- Raise the flower guard when the line trimmer is not in use.

Automatic Line Feeding

WARNING: To prevent damage, DO NOT BUMP THE SPOOL HOUSING AGAINST THE GROUND. This line trimmer uses an automatic line-feed system.

WARNING: Do not remove or modify the line cutter assembly. Excessive cutting-line length may cause the motor to overheat and may result in serious personal injury.

The product is equipped with a dual-line automatic feed mechanism.

The cutting line advances automatically during the stop/start cycle. If the line extends beyond the required cutting diameter, the excess line is automatically trimmed by the line cutter on the safety guard.

NOTICE: If the cutting line appears too short, switch the product off and then restart it several times. When you hear the line cutter trimming the line, the correct cutting length has been reached.

© Baumr-AG

Lithium Battery Care and Maintenance

Top 3 Battery Care Requirements

1. **Charge battery before first use**. The battery may arrive with some charge, regardless of this the battery must be charged for 60 minutes on the initial charge and 60 minutes for each subsequent charge.
2. **Charge battery immediately when it is depleted.** Do not store a depleted battery. This will permanently impact the life of the battery. If the battery is going to be stored for a period of time, fully charge the battery before storing.
3. **Disconnect battery when not in use**. To prolong the life of a battery, disconnect it from the unit when not in use. Disconnect chargers from the battery once charged.

To ensure the battery maintains optimum performance, follow the guidelines outlined below.

- For best results, charge batteries in temperatures between 10°C and 30°C
- When battery is charged, disconnect the charger from the power supply and remove the battery from the charger.
- If a battery is stored or otherwise unused for an extended period, and the battery has no charge remaining when you check it, consider it to be damaged. Do not attempt to recharge it or to use it. Replace it with a new battery.
- Use only with the battery charger specified by the manufacturer.
- Ensure that the battery charger electrical cord is not subjected to damage or stress. Do not operate the battery charger if it has a damaged electrical cord or plug.
- Do not use the charger in wet areas or expose it to rain or water.
- The typical estimated life of a Lithium-Ion battery is about two to three years or 300 to 500 charge cycles, whichever occurs first. One charge cycle is a period of use from fully charged, to fully discharged, and fully recharged again.
- Explosion hazard – protect the battery against heat, for example, direct sunlight and fire. Do not store batteries in vehicles or locations subject to heat.
- Batteries can explode in the presence of an ignition source, such as a pilot light. To reduce the risk of serious personal injury, never use any cordless product in the presence of open flame. Exploding batteries can propel debris and chemicals.
- Do not open the battery – danger of short-circuiting and/or explosion.
- Do not attempt to destroy or disassemble the battery pack or remove any of its components.
- Do not touch the battery terminals with metal objects and/or body parts as short-circuit and/or personal injury may result.
- Explosion hazard – do not open and/or short-circuit the battery.
- Poison hazard – battery leakage (liquid ejection). Under extreme conditions, liquid may be ejected from the battery – avoid contact. If contact accidentally occurs, immediately seek medical attention, and flush with water. If liquid contacts eyes, immediately seek medical attention, flush with clean water for at least 10 minutes. Liquid ejected from the battery may cause irritation or burns.
- Dispose of non-serviceable batteries in an environmentally responsible manner and according to local regulations.

Failure to adhere to the requirements above may result in the battery becoming inoperative or battery life being reduced. In extreme cases or abuse, battery overheating, or fire may result.

DANGER - BATTERY CHARGING, USE AND STORAGE

Like mobile phones, laptops, cordless vacuum cleaners etc, this product may contain or be related to a lithium ion battery pack (lithium ion batteries and lithium ion battery related items only). Lithium ion batteries allow fast charging and high capacities, however care must be taken to reduce chances of a fault, and increase safety in case a fault occurs. Catastrophic incidents involving lithium ion batteries have a tendency to result in large amounts of smoke and fire. Be sure to follow the points below to reduce the likelihood of danger whenever you use, charge or store any lithium ion battery.

- Never charge a battery that has been damaged or subjected to a forceful impact.
- Never charge a battery that has been exposed to moisture or water.
- Never charge a battery with a charger that wasn't supplied with the battery.
- Never use a battery in a device that it wasn't specifically designed for.
- Never use a battery with a modified or damaged device.
- Never modify the battery, product, charger, circuitry or wiring.
- Never charge a battery in an exit path that may be used by people to leave a room or building in case of an emergency, for example, the hallway or foyer of a residence.
- Never charge a battery in an area or building that doesn't have the recommended number of working smoke detectors that have been tested in accordance with local guidelines.
- Never charge a battery when the battery or charger is displaying a problem or charging incorrectly.
- Always charge batteries on a non-combustible surface, for example, on a concrete floor.
- Always charge batteries at least 3m away from anything combustible, such as floors, wall surfaces, furniture, storage shelves etc.
- Always charge batteries in an open area (outside if possible) ensuring the battery and charger are away from moisture and water.
- Always disconnect batteries from the charger after charging.
- Always remove or disconnect batteries from the device/product when not in use.
- Always ensure batteries are charged under adult supervision. Do not charge unattended. Do not charge batteries while no one is home or while people are sleeping.
- Keep batteries away from heat and moisture.
- Damaged batteries should be disposed of through your local e-waste collection service.
- Avoid mixing and matching chargers. Unplug products when fully charged, and charge batteries in a cool, dry place away from combustible materials like beds, lounges, or carpet.
- During charging and use, check your lithium-ion batteries for overheating, signs of swelling, leaking, or venting gas. Immediately stop using your product if these signs are present.
- Allow batteries to cool after use and before charging.

Maintenance

WARNING: When servicing the tool, use only identical replacement parts. Using other parts may create a hazard or damage the product. For safety and reliability, repairs should be performed by a qualified service technician.

WARNING: To prevent serious personal injury, remove the battery pack before servicing, cleaning, changing attachments or removing material from the tool.

WARNING: Worn or damaged parts must be replaced before use. Use only replacement parts specified by the manufacturer.

WARNING: To prevent serious personal injury or equipment failure, do not use damaged equipment. If abnormal noise or vibration occurs, stop using the tool and have the problem corrected before further use.

General Maintenance

- Do not attempt to repair or disassemble the tool unless you have the appropriate tools, knowledge and instructions to do so.
- Check all parts regularly for correct tightness and ensure the tool is in safe working condition.
- Before each use, inspect the general condition of the tool. Check for:
  - loose components;
  - misaligned or binding moving parts;
  - cracked or broken parts;
  - a dull or damaged line cutter; and
  - any other condition that may affect safe operation.

Line Trimmer Maintenance

Regular cleaning and maintenance will help maintain the performance and service life of the line trimmer.

- Keep the ventilation slots, motor housing and handles clean. Use a damp cloth or soft brush.
- Do not immerse the tool in water or spray it with water. Do not use detergents or solvents, as these may damage plastic components.
- After each trimming session, remove grass, dirt and debris from the safety guard and trimmer head.

© Baumr-AG

REPLACING THE SPOOL

NOTICE: Replace the spool when the cutting line is depleted. Do not rewind the spool unless otherwise specified by the manufacturer. Ensure the tool is switched off and remove the battery before replacing the spool.

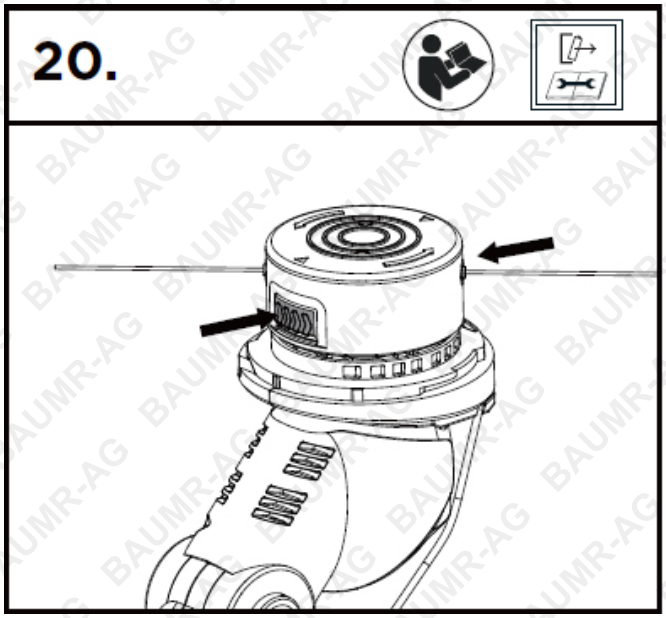

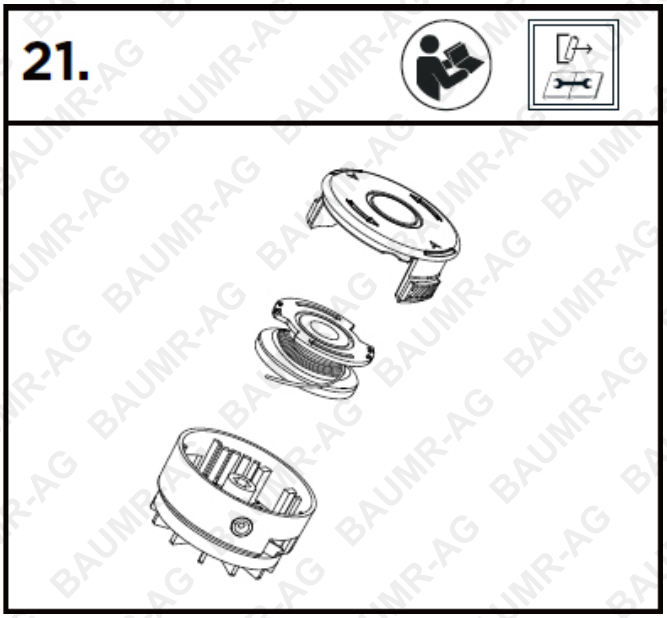

1. Remove the battery.
2. Press both release latches and remove the spool housing cap (Fig. 20).
3. Remove the old spool (Fig. 21).
4. Fit the new spool into the spool housing.
5. Feed both ends of the cutting line through the line outlet eyelets.
6. Refit the spool housing cap and press it into place until it clicks securely.

Sharpening the Line Cutter

WARNING: Always wear heavy-duty protective gloves when performing maintenance on the line cutter.

1. Remove the line cutter from the safety guard.
2. Secure the line cutter in a vice.
3. Wear appropriate eye protection and protective gloves. Take care to avoid contact with the cutting edge.
4. Carefully sharpen the cutting edge using a fine-tooth file or sharpening stone, maintaining the original cutting angle.
5. Refit the line cutter to the safety guard and secure it with the two screws.

© Baumr-AG

Storage

Before storing the line trimmer:

- Inspect the line trimmer thoroughly for worn, loose or damaged parts. If any parts require repair or replacement, contact the manufacturer for assistance.
- Remove the battery. Allow the motor to cool completely, then clean the line trimmer before storage.
- Store the line trimmer indoors in a locked, dry and well-ventilated location, out of reach of children and unauthorised persons.

Troubleshooting

WARNING: Switch off the tool and remove the battery before troubleshooting.

The following table lists common problems, possible causes and recommended actions. If the problem persists, contact the manufacturer for assistance.

Problem	Possible Cause	Remedy
Line trimmer does not operate	Battery is not installed correctly.	Check that the battery is fully inserted and securely locked in place.
	Battery is depleted.	Charge the battery.
	Battery is defective.	Replace the battery.
	Lock-Off Button is not pressed.	Press and hold the Lock-Off Button, then squeeze the On/Off Switch.
	Battery is too cold.	Remove the battery from the line trimmer and allow it to reach a suitable operating temperature before charging and reinstalling it.
	Grass is tangled around the trimmer head.	Remove the battery, then remove the grass and debris from the trimmer head.
	On/Off Switch is defective.	Contact the manufacturer for service.
Abnormal vibration or noise	Tool is defective.	Stop using the tool and contact the manufacturer for service.
	Trimmer head is dirty.	Remove the battery and clean the trimmer head.
	Cutting line is incorrectly positioned or tangled on the spool.	Replace the spool with a correctly wound replacement spool.
Automatic line feed does not operate	Cutting line is incorrectly positioned or tangled.	Remove the battery and replace the spool.
	Cutting line is depleted.	Replace the spool with a new one.
Cutting line does not advance	Insufficient cutting line remains on the spool.	Remove the battery and replace the spool.
	Cutting line is tangled on the spool.	Remove the battery and replace the spool.
	Trimmer head is dirty.	Remove the battery and clean the trimmer head.
Cutting performance is reduced	Grass is too long or dense.	Use lighter cutting passes and trim the grass in several stages.

© Baumr-AG

Specifications

Power Source	Battery
Battery Type	Lithium-ion
Battery Voltage	20V
Motor Type	Brushless
Motor Power	200W
Battery Capacity	2.0Ah
Battery Compatibility	Baumr-AG SYNC range
Charge Time	Approximately 60 minutes
Typical Working Time	Up to 10 minutes
Charger Approval	SAA

© Baumr-AG

Some experts believe that the incorrect or prolonged use of almost any product may cause serious injury or death. To help reduce your risk of serious injury or death, refer to the information below. For more information, see www.datastreamserver.com/safety

- Consult all documentation, packaging, and product labelling before use. Note that some products feature documentation available online. It is recommended to print and retain the documentation.
- Before each use, check the product for loose/broken/damaged/missing parts, wear, or leaks (if applicable). Never use a product with loose/broken/damaged/missing parts, wear, or leaks.
- Products must be inspected and serviced (if applicable) by a qualified technician every 6 months. This is based on average residential use by persons of average size and strength, and on a property of average metropolitan size. Use beyond these recommendations may require more frequent inspections/servicing.
- Ensure that all users of the product have completed a suitable industry recognised training course before being allowed access to the product.
- The product has been supplied by a general merchandise retailer that may not be familiar with your specific application or description of application. Be sure to attain third-party approval from a qualified specialist for your application before use, regardless of any assurances from the retailer or its representatives.
- This product is not intended for use where fail-safe operation is required. As with any product (for example, automobile, computer, toaster), there is the possibility of technical issues that may require the repair or replacement of parts, or the product itself. If the possibility of such failure and the associated time it may take to rectify could in any way inconvenience the user, business, or employee, or financially affect the user, business, or employee, then the product is not suitable for your requirements. This product is not intended for use where incorrect operation or a failure of any kind, including but not limited to, a condition requiring product return, replacement, parts replacement, or service by a technician may cause financial loss, loss of employee time or an inconvenience requiring compensation.
- If this product has been purchased in error when considering the information presented here, contact the retailer directly for details of their returns policy, if required.

edisons.com.au

© Baumr-AG. All rights reserved. No part of this document, including descriptive content, concepts, ideas, diagrams, or images may be reproduced or transmitted in any form or by any means, electronic or mechanical, including photocopying, scanning, or recording, or any information storage and retrieval system, without express permission or consent from the publisher.