greenworks

POWERALL 24V+24V 48V

EN	LAWN MOWER	OPERATOR MANUAL
FR	TONDEUSE À GAZON	MANUEL D'OPÉRATEUR
ES	CORTACÉSPED	MANUAL DEL OPERADOR



LME472

www.greenworkstools.com

EN

THIS MACHINE MUST HAVE TWO BATTERIES TO RUN!

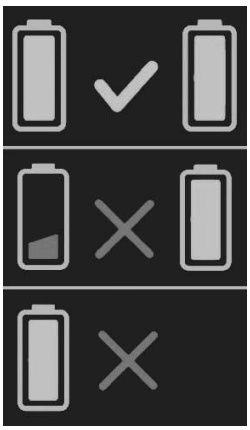

- Must use (2) fully charged Greenworks 24V battery packs.
- Do not use battery packs other than Greenworks 24V.
- Using only one battery pack will not start the machine.

- Ensure both batteries are charged 100%.
- If each battery has a different charge state, the run-time of the machine is subject to the lowest powered battery (For example: one battery is charged 100%, and the other is charged 50%, the unit will only run until the 50% battery is depleted).
- When using (2) batteries with different amp hours (Ah), the machine will run until the lower (Ah) battery is depleted.

FR

CETTE MACHINE DOIT AVOIR DEUX BATTERIES POUR FONCTIONNER!

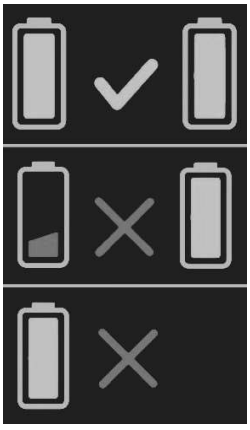

- Doit utiliser (2) blocs-piles Greenworks 24 V entièrement chargés.
- N'utilisez pas de batteries autres que Greenworks 24 V.
- L'utilisation d'une seule batterie ne démarrera pas la machine.

- Assurez-vous que les deux batteries sont entièrement chargées.
- Si l'état de charge de chaque batterie est différente, l'autonomie de la machine est soumise à la batterie la moins alimentée (par ex., : une batterie est entièrement chargée et l'autre ne l'est qu'à 50 %, l'unité ne fonctionnera que jusqu'au 50 % de la batterie est épuisée).
- Lors de l'utilisation de (2) batteries ayant différents ampères-heures (Ah), la machine fonctionnera jusqu'à ce que la batterie inférieure (Ah) soit épuisée.

ES

¡ESTA MÁQUINA DEBE TENER DOS BATERÍAS PARA FUNCIONAR!

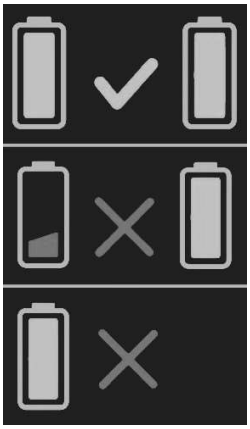

- Deben utilizarse (2) baterías Greenworks de 24V totalmente cargadas.
- No utilice baterías que no sean de Greenworks 24V.
- La utilización de una sola batería no hará que la máquina se ponga en marcha.

- Asegúrese de que ambas baterías estén cargadas al 100%.
- Si cada batería tiene un estado de carga diferente, el tiempo de funcionamiento de la máquina está sujeto a la batería de menor carga (Por ejemplo: una batería está cargada al 100% y la otra al 50%, la unidad solo funcionará hasta que la batería del 50% se agote).
- Cuando se utilizan (2) baterías con diferentes amperios hora (Ah), la máquina funcionará hasta que la batería inferior (Ah) se agote.

1 Description.....4
1.1 Purpose.....4
1.2 Overview.....4
1.3 Packing list.....4
2 Read all instructions.....4
2.1 Children and Bystanders.....4
2.2 General Operation.....4
2.3 Service/Maintenance.....6
2.4 Slope Operation.....6
3 Symbols on the product.....7
4 Risk levels.....7
5 Environmentally safe battery disposal.....8
6 Proposition 65.....8
7 Installation.....8
7.1 Unpack the machine.....8
7.2 Unfold and adjust the handle.....9
7.3 Install the upper handle 9
7.4 Install the grass catcher.....9
7.5 Install the mulch plug.....9
7.6 Set the blade height.....10
7.7 Install the battery pack.....10
7.8 Remove the battery pack.....10
8 Operation.....10
8.1 Start the machine.....10
8.2 Stop the machine.....11
8.3 Empty the grass catcher.....11
8.4 Operation tips.....11
9 Maintenance.....11
9.1 Replace the blade.....11
9.2 Store the machine.....11
10 Troubleshooting.....12
11 Technical data.....12
12 Limited warranty.....13
13 Exploded view.....14

1 DESCRIPTION

1.1 PURPOSE

This machine is used for domestic lawn mowing. The cutting blade must be approximately parallel to the ground. All four wheels must touch the ground while you mow.

1.2 OVERVIEW

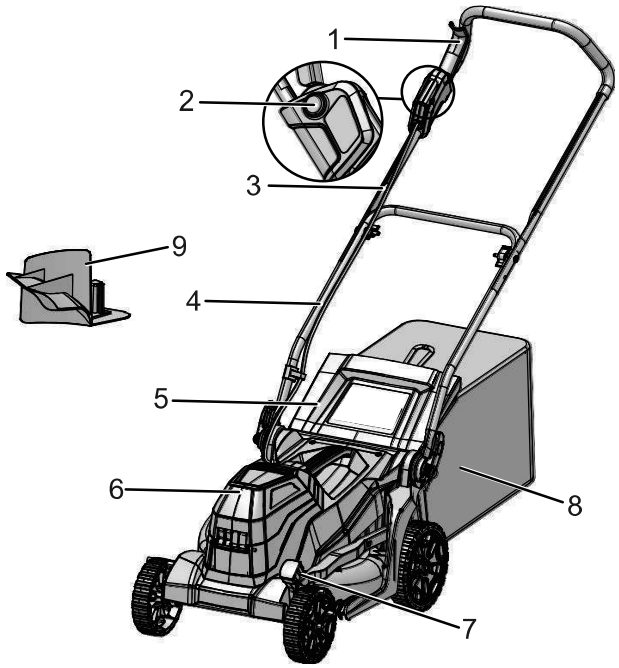

1	Handle switch
2	Start button
3	Upper handle
4	Lower handle
5	Rear discharge door
6	Battery door
7	Height adjustment lever
8	Grass catcher
9	Mulch plug

1.3 PACKING LIST

1	Lawn mower	**3**	Manual
2	Grass catcher		

2 READ ALL INSTRUCTIONS

⚠ DANGER

This machine was built to be operated according to the rules for safe operation included in this manual. As with any type of power equipment, carelessness or error on the part of the operator can result in serious injury. This machine is capable of amputating hands and feet and throwing objects. Failure to observe all safety instructions could result in serious injury or death.

i NOTE

When using electric lawn mowers, basic safety precautions should always be followed to reduce the risk of fire, electric shock, and personal injury. These basic precautions include the following:

2.1 CHILDREN AND BYSTANDERS

Tragic accidents can occur if the operator is not alert to the presence of children or bystanders.

- Keep the area of operation clear of all persons, particularly small children, and pets.
- Use extreme care when approaching blind corners, doorways, shrubs, trees, or other objects that may obscure your vision of a child or bystander. Keep children, bystanders, helpers and pets at least 100 feet (30m) from the mower while it is in operation. Stop the machine if anyone enters the area.
- Never allow children under 14 years old to operate a power mower. Operators 14 years old and over should fully read and understand the operator's manual and safety rules. Only responsible individuals who are familiar with these rules of safe operation should be allowed to use this machine.

2.2 GENERAL OPERATION

- Read this operator's manual carefully in its entirety before assembling or operating this machine. Read, understand, and follow all instructions on the machine and in the manuals before operation. Familiarize yourself with the controls and proper use of this machine before operation. Save this manual for future and regular reference.
- Do not use the lawn mower for any job except that for which it is intended. Your lawn mower has been designed to perform only one job: cut grass.
- Never attempt to make a wheel height adjustment while the motor is running.
- Don't force the lawn mower; it will do the job better and more safely at the rate for which it was designed.
- Don't overreach, keep proper footing and balance at all times. Many injuries occur as a result of the mower being pulled over the foot during a fall caused by slipping or tripping. A slip and fall can cause serious personal injury. If you feel you are losing your footing, release the control

handle immediately and the blade will stop rotating within three seconds.

- Thoroughly inspect the area where the mower is to be used and remove all stones, sticks, wires, dog bones, and other foreign objects.
- Prevent unintentional starting. Ensure the switch is in the off position before connecting to battery pack, picking up or carrying the mower. Carrying the mower with your finger on the switch or energizing mower that has the switch on invites accidents.
- Never pull the mower back toward you while you are walking. If you must back the mower away from a wall or obstruction, first look down and behind you to avoid tripping, and then follow these steps:
  - Step back from the mower in order to fully extend your arms.
  - Be sure that you are well balanced.
  - Pull the mower back slowly.
- Remove the battery pack from the mower before making any adjustments, changing accessories, or storing appliance. Such preventive safety measures reduce the risk of starting the mower accidentally.
- Before and while moving backwards with the mower, look behind and down for small children and other people.
- Do not operate the mower while under the influence of alcohol or drugs. Stay alert and watch what you are doing at all times. Use common sense and do not operate the lawn mower when you are tired.
- Always wear safety glasses or safety goggles during operation and while performing an adjustment or repair to protect your eyes. Thrown objects that ricochet can cause serious injury to the eyes. Always use a face or dust mask if the operation is dusty.
- Keep clear of the discharge opening at all times. Do not put hands or feet near rotating parts or under the cutting deck. Contact with the blade can amputate hands and feet.
- Plan your mowing pattern to avoid discharge of material toward roads, sidewalks, bystanders and the like. Also, avoid discharging material against walls or obstructions, which may cause discharged material to ricochet back toward the operator.
- To help avoid the blade or an injury from a thrown objects, stay in the operator zone behind the handles.
- A missing or damaged discharge cover can cause blade contact or injuries from thrown objects.
- Objects struck by the lawn mower blade can cause severe injuries to persons. The lawn should always be carefully examined and cleared of all objects prior to each mowing.
- Stop the blade when crossing gravel drives, walks or roads.
- Follow all charging instructions and do not charge the battery pack or mower outside of the temperature range specified in the instructions. Charging improperly or at temperatures outside of the specified range may damage the battery and increase the risk of fire.
- If lawn mower strikes a foreign object, follow these steps:
  - Release the bail switch to disengage the motor.
  - Remove the battery.
  - Inspect for damage.
  - Repair any damaged parts before restarting and operating the lawn mower.
- Have servicing performed by a qualified repair person using only identical replacement parts. This will ensure that the safety of the product is maintained.
- Dress properly; do not wear loose clothing or jewelry that can be caught in moving parts. Use of safety gloves and proper footwear is recommended when working outdoors. Wear sturdy, rough-soled work shoes and close-fitting slacks and shirts. Shirts and pants that cover the arms and legs and steel-toed shoes are recommended. Never operate this machine in bare feet, sandals, slippery or lightweight (e.g., canvas) shoes.
- Do not modify or attempt to repair the mower or the battery pack (as applicable) except as indicated in the instructions for use and care.
- Wear protective hair covering to contain long hair.
- Avoid dangerous environments; do not use the lawn mower in damp/wet locations or if it is raining.
- Store idle lawn mower indoors. When not in use, appliances should be stored indoors in dry, and high or locked-up place – out of reach of children. Always remove the battery from the mower before storing.
- Mow only in daylight or good artificial light. Walk, never run while operating.
- If the mower should start to vibrate abnormally, immediately stop the motor, remove the battery and check for the cause. Vibration is generally a warning that the mower is not functioning properly.
- Check bag frequently for deterioration and wear, and replace worn bags. Check that replacement bags comply with the original manufacturer's recommendations or specifications.
- Before cleaning the mower, unclogging or removing the grass bag, mulching insert, or side discharge chute, turn the motor off and wait until the blade comes to a complete stop, then remove the battery pack. The cutting blade continues to rotate for a few seconds after the motor is shut off. Never perform these functions until you are sure the blade has stopped rotating.
- Keep cutting edges clean and sharp to ensure best performance.
- Periodically inspect safety devices and cords for damage. If damaged do not operate the unit until it has been repaired by an authorized service professional.
- Never operate the mower without the proper discharge cover, grass bag, mulching insert, side discharge chute, or other safety devices in place and working. Never operate the mower with damaged safety devices. Failure to do so can result in personal injury.
- Use only approved batteries and chargers. Non-approved batteries and chargers may cause damage to the mower or injure the operator.

- Do not dispose of the battery in a fire. The cells could catch fire or explode. Check with local codes and waste management for proper disposal instructions.
- When battery pack is not in use, keep it away from other metal objects, like paper clips, coins, keys, nails, screws or other small metal objects that can make a connection from one terminal to another. Shorting the battery terminals together may cause burns or a fire.
- Do not open or destroy the battery. Electrolytes contained within the battery are corrosive and may cause damage to eyes or skin if released. It may be toxic if swallowed.
- Under abusive conditions, liquid may be ejected from the battery; avoid contact. If contact accidentally occurs, flush with water. If liquid contacts eyes, additionally seek medical help. Liquid ejected from the battery may cause irritation or burns.
- Do not expose a battery pack or appliance to fire or excessive temperature. Exposure to fire or temperature above130°C may cause explosion.
- Exercise care in handling batteries to avoid shorting the battery with conducting materials such as rings, bracelets, keys, etc. The battery or conductor may overheat and cause burns if contact with said materials is made.
- Do not use a battery pack or appliance that is damaged or modified. Damaged or modified batteries may exhibit unpredictable behavior resulting in fire, explosion or risk of injury.

2.3 SERVICE/MAINTENANCE

- Check the blade and the motor (machine) mounting bolts at frequent intervals for proper tightness.
- Replace the blade if it is bent or cracked. An unbalanced blade causes vibration that could damage the motor drive unit or cause personal injury.
- Keep all nuts, bolts, and screws tight in order to ensure the equipment is in safe working condition.
- Do not wash with a hose; avoid getting water in motor and electrical connections.
- Never remove or tamper with safety devices. Check their proper operation regularly. Never do anything to interfere with the intended function of a safety device or to reduce the protection provided by a safety device.
- Keep mower free of grass, leaves, or other debris build up. Allow mower to cool before storing.
- Never make any adjustments or repairs with the motor running.
- Always remove battery pack from mowers before adjusting, cleaning, or repairing.
- Check grass catcher components and the discharge guard frequently and replace with manufacturer's recommended parts, when necessary.
- Sharpen a dull blade equally at each end to maintain the balance.
- Keep guards in place and in working order. Mower blades are sharp, and can cut. Wrap the blades or wear gloves, and use extra caution when servicing.
- Clean the blade thoroughly and check its balance by supporting it horizontally on a thin nail through its center hole. The nail should also be in a horizontal position. If either end of the blade rotates downward, remove some metal from the heavy or lower end until the blade is balanced. It is balanced when neither end drops.
- Use identical replacement blades only.
- Maintain lawn mower with care. Keep cutting edges sharp and clean for best and safest performance. Follow instructions for lubricating and changing accessories. Inspect lawn mower cord periodically and if damaged, have it repaired by an authorized service facility.
- If situations occur that are not covered in this manual, use care and good judgment or contact Customer Service for assistance.
- Never operate the mower without proper guards, plates, or other safety protective devices in place.
- Before each use, examine the machine for damaged, missing, or loose parts such as screws, nuts, bolts and caps.
- Tighten correctly all the fasteners and caps.
- Clean the machine with a dry cloth. Do not use water.

The recommended ambient temperature range:

Item	Temperature
Mower storage temperature range	32°F (0°C) - 113°F (45°C)
Mower operation temperature range	32°F (0°C) - 113°F (45°C)
Battery charging temperature range	39°F (4°C) - 104°F (40°C)
Charger operation temperature range	39°F (4°C) - 104°F (40°C)
Battery storage temperature range	32°F (0°C) - 113°F (45°C)
Battery discharging temperature range	32°F (0°C) - 113°F (45°C)

2.4 SLOPE OPERATION

Slopes are a major factor related to slip-and-fall accidents, which can result in severe injury. Operation on slopes requires extra caution. If you feel uneasy on a slope, do not mow it.

Do:

- Mow across the face of slopes; never mow up and down. Exercise extreme caution when changing direction on slopes.
- Watch for holes, roots, rocks, hidden objects, or bumps which can cause you to slip or trip. Tall grass can hide obstacles. Remove all obstacles such as rocks and tree limbs.
- Make sure that your footing is stable. If you are out of balance, release the switch immediately.

Do not:

- Mow excessively steep slopes.
- Mow near drop-offs, ditches or embankments; you could lose your footing or balance.
- Mow slopes greater than 15 degrees.
- Mow on wet grass. Unstable footing could cause slipping.

⚠ WARNING

Do not mow on the slopes with incline more than 15°. If you are not comfortable, do not mow on a slope.

i TIP

In case of self-propelled mowers, please keep a low self-propelled speed when you mow on a slope.

3 SYMBOLS ON THE PRODUCT

Some of the following symbols may be used on this mower. Please study them and learn their meaning. Proper interpretation of these symbols will allow you to operate the mower better and safer.

Symbol	Name	Explanation
V	Volt	Voltage
A	Amperes	Current
Hz	Hertz	Frequency (cycles per second)
W	Watt	Power
min	Minutes	Time
/min	Per Minute	Revolutions, strokes, surface speed, orbits etc., per minute
~	Alternating Current	Type of current
⎓	Direct Current	Type or a characteristic of current
n_0	No Load Speed	Rotational speed, at no load
	Safety Alert	Precautions that involve your safety.
	Eye Protection	Always wear eye protection with side shields marked to comply with ANSI Z87.1 when operating this equipment.
	WARNING --- Wet Conditions	Do not expose the product to rain or moist conditions.
	Read Operator's Manual	To reduce the risk of injury, user must read and understand operator's manual before using this product.

Symbol	Name	Explanation
	Maintain Safety Devices	Do not open or remove safety devices while the tool is running.
	Look Behind While Backing	Look down and behind first to avoid tripping when pulling back.
	DANGER --- Keep Hands and Feet Away	To reduce the risk of injury, keep hands and feet away from rotating parts. Do not operate unless discharge cover or grass bag is in its proper place. If damaged, replace immediately.
	DANGER --- Keep Bystanders Away	All visitors should be kept at a distance from work area.
	DANGER --- Thrown Debris	Remove objects that can be thrown by the blade in any direction. Wear safety glasses.
	DANGER --- Steep Slope Hazard	Use extra caution on slopes. do not mow slopes greater than 15 degrees.

4 RISK LEVELS

The following signal words and meanings are intended to explain the levels of risk associated with this product.

SYMBOL	SIGNAL	MEANING
	DANGER	Indicates an imminently hazardous situation, which, if not avoided, will result in death or serious injury.
	WARNING	Indicates a potentially hazardous situation, which, if not avoided, could result in death or serious injury.
	CAUTION	Indicates a potentially hazardous situation, which, if not avoided, may result in minor or moderate injury.
	CAUTION	(Without Safety Alert Symbol) Indicates a situation that may result in property damage.

5 ENVIRONMENTALLY SAFE BATTERY DISPOSAL





The toxic and corrosive materials below are in the batteries used in this machine: **Lithium-Ion, a toxic material.**

⚠ WARNING

Discard all toxic materials in a specified manner to prevent contamination of the environment. Before discarding damaged or worn out Li-ion battery, contact your local waste disposal agency, or the local Environmental Protection Agency for information and specific instructions. Take the batteries to a local recycling and/or disposal center, certified for lithium-ion disposal.

⚠ WARNING

If the battery pack cracks or breaks, with or without leaks, do not recharge it and do not use. Discard it and replace with a new battery pack. DO NOT TRY TO REPAIR IT! To prevent injury and risk of fire, explosion, or electric shock, and to avoid damage to the environment:

- Cover the terminals of the battery with heavy-duty adhesive tape.
- DO NOT try to remove or destroy any of the battery pack components.
- DO NOT try to open the battery pack.
- If a leak develops, the released electrolytes are corrosive and toxic. DO NOT get the solution in the eyes or on skin, and do not swallow it.
- DO NOT put these batteries in your regular household trash.
- DO NOT incinerate.
- DO NOT put them where they will become part of any waste landfill or municipal solid waste stream.
- Take them to a certified recycling or disposal center.

6 PROPOSITION 65

⚠ WARNING

This product contains a chemical known to the state of California to cause cancer, birth defects or other reproductive harm. Some dust created by power sanding, sawing, grinding, drilling, and other construction activities contains chemicals known to cause cancer, birth defects or other reproductive harm. Some examples of these chemicals are:

- Lead from lead-based paints;
- Crystalline silica from bricks and cement and other masonry products;
- Arsenic and chromium from chemically treated lumber.

Your risk of exposure to these chemicals varies depending on how often you do this type of work. To reduce your exposure to these chemicals, work in a well-ventilated area, and work with approved safety equipment, such as dust masks that are specially designed to filter out microscopic particles.

Save these instructions.

7 INSTALLATION

⚠ WARNING

Do not change or make accessories that are not recommended by the manufacturer.

⚠ WARNING

Do not put in the safety key or the battery pack until you assemble all the parts.

7.1 UNPACK THE MACHINE

⚠ WARNING

Make sure that you correctly assemble the machine before use.

⚠ WARNING

- If the parts are damaged, do not use the machine.
- If you do not have all the parts, do not operate the machine.
- If the parts are damaged or missing, speak to the service center.

1. Open the package.
2. Read the documentation in the box.
3. Remove all the unassembled parts from the box.
4. Remove the machine from the box.
5. Discard the box and package in compliance with local regulations.

7.2 UNFOLD AND ADJUST THE HANDLE

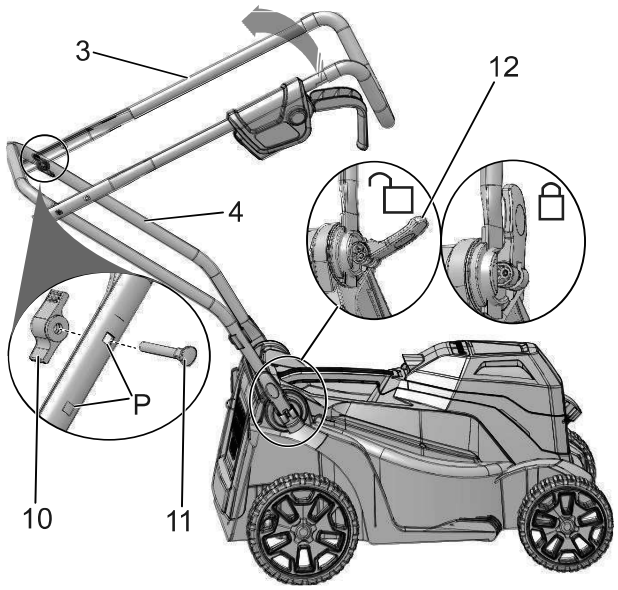

1. Pull up and back the upper handle (3) to lift the handle into operation position. Make sure that the handles click into position correctly.
2. Tighten the lower handle (4) with the quick-release levers (12) on the two sides.

NOTE

Make sure that the two handles are in the same position.

WARNING

Do not make damage to the cables when you fold or unfold the handle.

7.3 INSTALL THE UPPER HANDLE

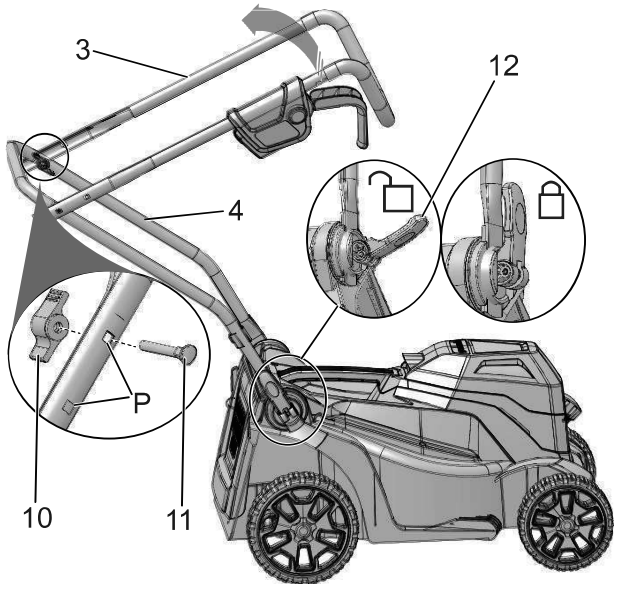

1. Align the holes in the upper handle (3) and the lower handle (4).
2. Put the bolts (11) through the holes.
3. Tighten the knobs (10) onto the bolts.
4. Do the same operation on the other side.

TIP

There are two positions (P) to choose while installing the upper handle.

7.4 INSTALL THE GRASS CATCHER

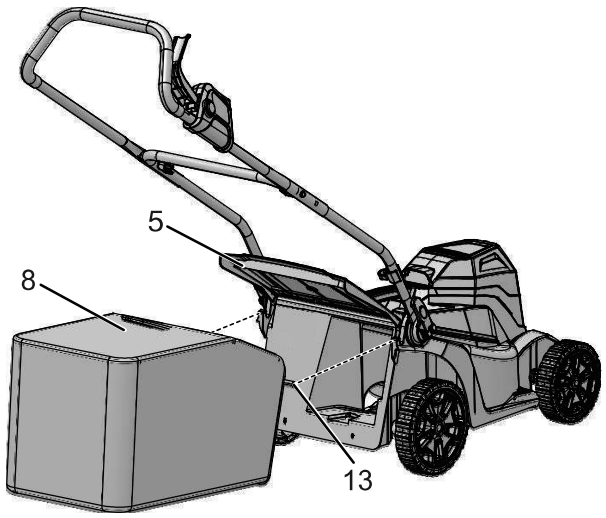

1. Remove the mulch plug.
2. Open the rear discharge door (5) and hold it.
3. Hold the the grass catcher (8) by its handle and put the hooks (13) over the slots.
4. Close the rear discharge door.

7.5 INSTALL THE MULCH PLUG

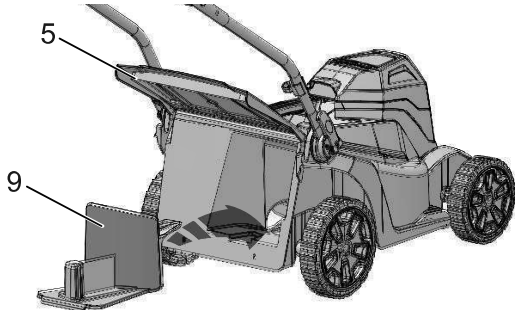

1. Remove the grass catcher.
2. Open the rear discharge door (5) and hold it.
3. Hold the mulch plug (9) by its handle and fit it in the discharge chute.
4. Close the rear discharge door.

7.6 SET THE BLADE HEIGHT

The machine can be set to different blade heights.

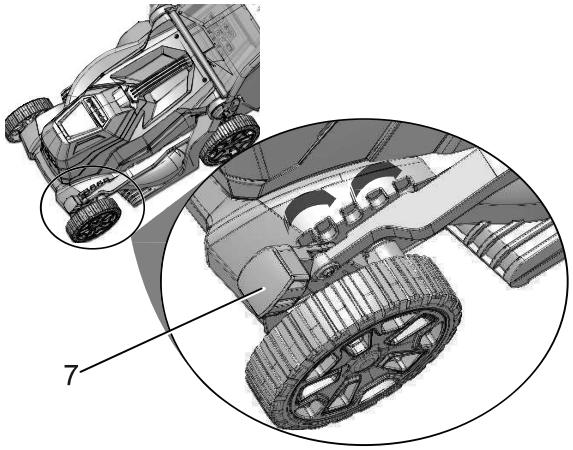

1. Pull the height adjustment lever (7) forward to increase the blade height.
2. Pull the height adjustment lever rearward to decrease the blade height.

7.7 INSTALL THE BATTERY PACK

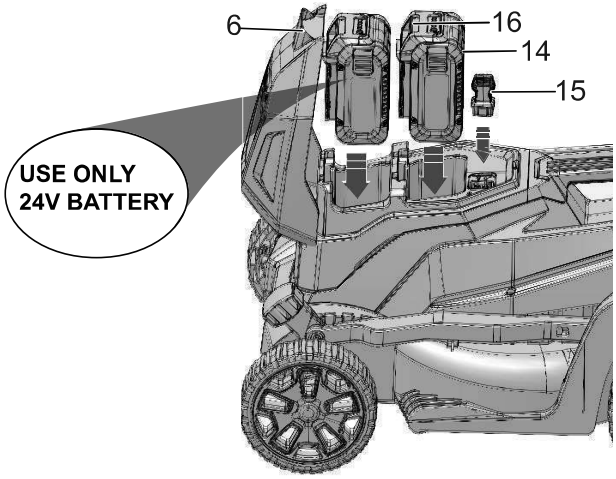

⚠ WARNING

- If the battery pack or charger is damaged, replace the battery pack or the charger.
- Stop the machine and wait until the engine stops before you install or remove the battery pack.
- Read, know, and do the instructions in the battery and charger manual.

⚠ WARNING

USE ONLY 24V BATTERY. DO NOT USE DUAL-VOLTAGE 24/48V BATTERY.

i NOTE

Both batteries should be installed into the compartments in order to start the machine.

1. Open the battery door (6).
2. Align the lift ribs on the battery pack (14) with the grooves in the battery compartment.
3. Push the battery pack into the battery compartment until the battery pack locks into place.
4. When you hear a click, the battery pack is installed.
5. Do the same operation with the other battery.
6. Close the battery door.

i NOTE

The motor starts only when you put in the safety key (15).

7.8 REMOVE THE BATTERY PACK

1. Open the battery door (6).
2. Remove the safety key (15).
3. Push and hold the battery release button (16).
4. Remove the battery pack from the machine.

8 OPERATION

⚠ WARNING

Wear eye protection during operation.

8.1 START THE MACHINE

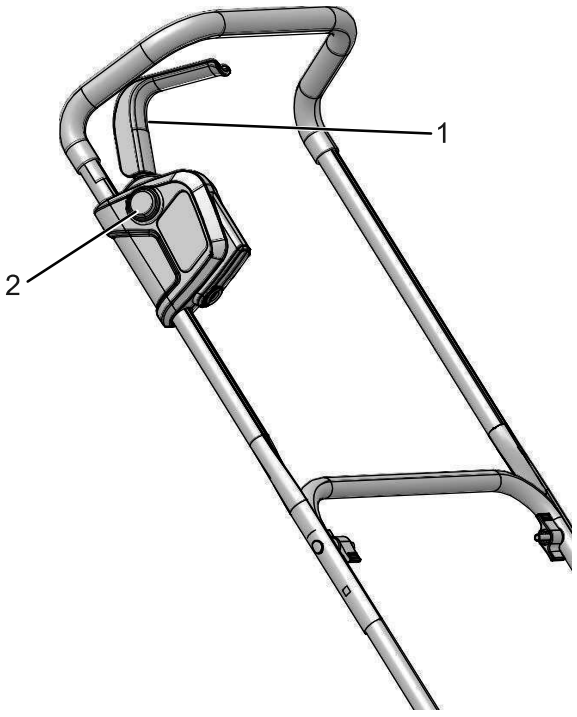

1. Put in the safety key.

2. Push and hold the start button (2).
3. While you hold the start button, pull the handle switch (1) in the direction of the handle bar.
4. Release the start button to start the machine.

8.2 STOP THE MACHINE

1. Release the handle switch to stop the machine.

⚠ WARNING

Wait until the blade fully stops before you start the machine again. Do not quickly turn the machine off and on.

⚠ WARNING

Always remove the safety key and battery pack after you complete the work.

8.3 EMPTY THE GRASS CATCHER

1. Stop the machine.
2. Remove the safety key.
3. Remove the battery pack.
4. Open the rear discharge door and hold it.
5. Hold the grass catcher by its handle and unhook it from the slots.
6. Close the rear discharge door.
7. Empty the grass catcher.

8.4 OPERATION TIPS

- Do not try to override the operation of the start button or handle switch.
- Do not tilt the machine when you start it.
- Do not put hands or feet near or below the turning parts.
- Keep the discharge chute clean.
- Do not cut wet grass.
- Higher blade height is necessary for new or thick grass.
- Clean the bottom of the mower deck after each use. Remove grass clippings, leaves, dirt, and other debris.

9 MAINTENANCE

⚠ WARNING

Remove the safety key and battery pack from the machine before maintenance.

⚠ WARNING

Keep the motor and battery pack free from grass, leaves or too much grease.

⚠ CAUTION

Use only approved replacement parts.

⚠ CAUTION

Do not let brake fluids, gasoline, petroleum-based materials touch the plastic parts. Chemicals can cause damage to the plastic, and make the plastic unserviceable.

⚠ CAUTION

Do not use strong solvents or detergents on the plastic housing or components.

9.1 REPLACE THE BLADE

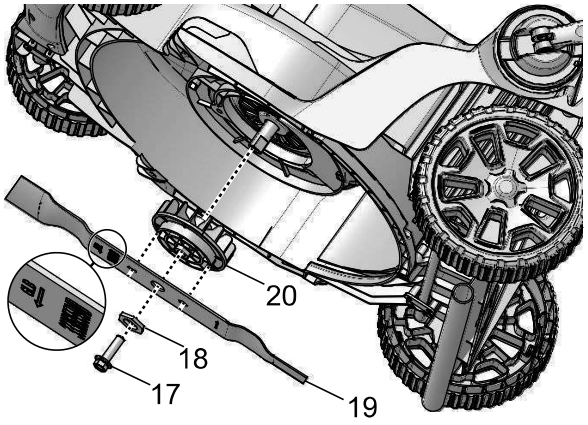

⚠ WARNING

Use only approved replacement blade.

⚠ WARNING

Wear heavy gloves or wind cloth around the blade when you touch the blade.

1. Stop the machine.
2. Make sure that the blade fully stops.
3. Remove the safety key and battery pack.
4. Turn the machine to its side.
5. Use a piece of wood to prevent the movement of the blade.
6. Remove the blade bolt (17), the spacer (18) with a wrench or socket.
7. Remove the blade (19) and fan (20).
8. Install the new blade as shown in the figure. Make sure the arrow-shaped holes on the blade engage the posts on the fan.
9. Put in the spacer and tighten the balde bolt.

9.2 STORE THE MACHINE

- Clean the machine before storage.
- Make sure the motor is not hot when you put the machine into storage.

- Make sure that the machine does not have loose or damaged parts. If it is necessary, do these steps/ instructions:
  - Replace the damaged parts.
  - Tighten the bolts.
  - Speak to a person of an approved service center.
- Store the machine in a dry area.
- Make sure that children cannot come near the machine.

You may lower the handle(s) before you put the machine into the storage.

1. Fully loosen the handle fasteners on the sides of the handle(s).
2. Fold away the handle(s).
3. Do not pinch or trap the cables.

10 TROUBLESHOOTING

Problem	Possible cause	Solution
The handle is not in position.	The bolts are not engaged correctly.	Adjust the height of the handle and make sure that the bolts and nuts are aligned correctly.
The machine does not start.	The battery capacity is low.	Charge the battery pack.
	The start handle is defective.	Replace the start handle.
	The battery key is not put in.	Put in the battery key.
The machine cuts grass unevenly.	The lawn is rough.	Examine the mowing area.
	The blade height is not set correctly.	Move the wheels to a higher position.
The machine does not mulch correctly.	Wet grass clippings attach to the deck.	Wait until the grass dries before mowing.
	The mulch plug is missing.	Install the mulch plug.
The machine is hard to push.	The grass is too tall, or the blade height is too low.	Increase the blade height.
	The grass catcher and the blade drags in thick grass.	Empty the grass clippings from the grass catcher.
There is a high vibration in the machine.	The blade is unbalanced and worn.	Replace the blade.
	The motor shaft is bent.	1. Stop the motor. 2. Remove the safety key and battery pack. 3. Disconnect the power source. 4. Inspect for damage. 5. Repair the machine before you start it again.
The machine stops during mowing.	The blade height is too low.	Increase the blade height.
	The battery pack is out of power.	Charge the battery pack.
	The grass clippings attach to the deck or the blade.	Remove the battery pack and check the deck.
	Operation temperature of the machine is too high.	Cool the machine.

* If you cannot find the solution to these problems, go to the service center.

11 TECHNICAL DATA

Voltage	(2*24) 48 V
No load speed	3600 RPM
Deck size	14"
Height adjustments	1 1/4 - 3 1/8” (3.0 - 8.0 cm)
Functions	2-in-1 Mulch & Rear Bag
Weight (without battery pack)	28.2 lbs (12.8 kg)
Battery model	BAG709 and other BAG series
Charger model	CAG812/CAG817 and other CAG series

12 LIMITED WARRANTY



Greenworks hereby warranties this product, to the original purchaser with proof of purchase, for a period of three (3) years against defects in materials, parts or workmanship. Greenworks, at its own discretion, will repair or replace any and all parts found to be defective, through normal use, free of charge to the customer. This warranty is valid only for units which have been used for personal use that have not been purchased or rented for industrial/commercial use, and that have been maintained in accordance with the instructions in the owners' manual supplied with the product when new.

ITEMS NOT COVERED BY WARRANTY:

1. Any part that has become inoperative due to misuse, commercial use, abuse, neglect, accident, improper maintenance, or alteration; or
2. The unit, if it has not been operated and/or maintained in accordance with the owner's manual; or
3. Normal wear;
4. Routine maintenance items such as lubricants, blade sharpening;
5. Normal deterioration of the exterior finish due to use or exposure.

HELPLINE:

Warranty service is available by calling our toll-free helpline at 1-888-909-6757.

TRANSPORTATION CHARGES:

Transportation charges for the movement of any power equipment unit or attachment are the responsibility of the purchaser. It is the purchaser's responsibility to pay transportation charges for any part submitted for replacement under this warranty unless such return is requested in writing by Greenworks.

USA address:	**Canadian address:**
Greenworks Tools	Greenworks Tools Canada, Inc.
P.O. Box 1238	P.O. Box 93095, Newmarket, Ontario
Mooresville, NC 28115	L3Y 8K3

13 EXPLODED VIEW

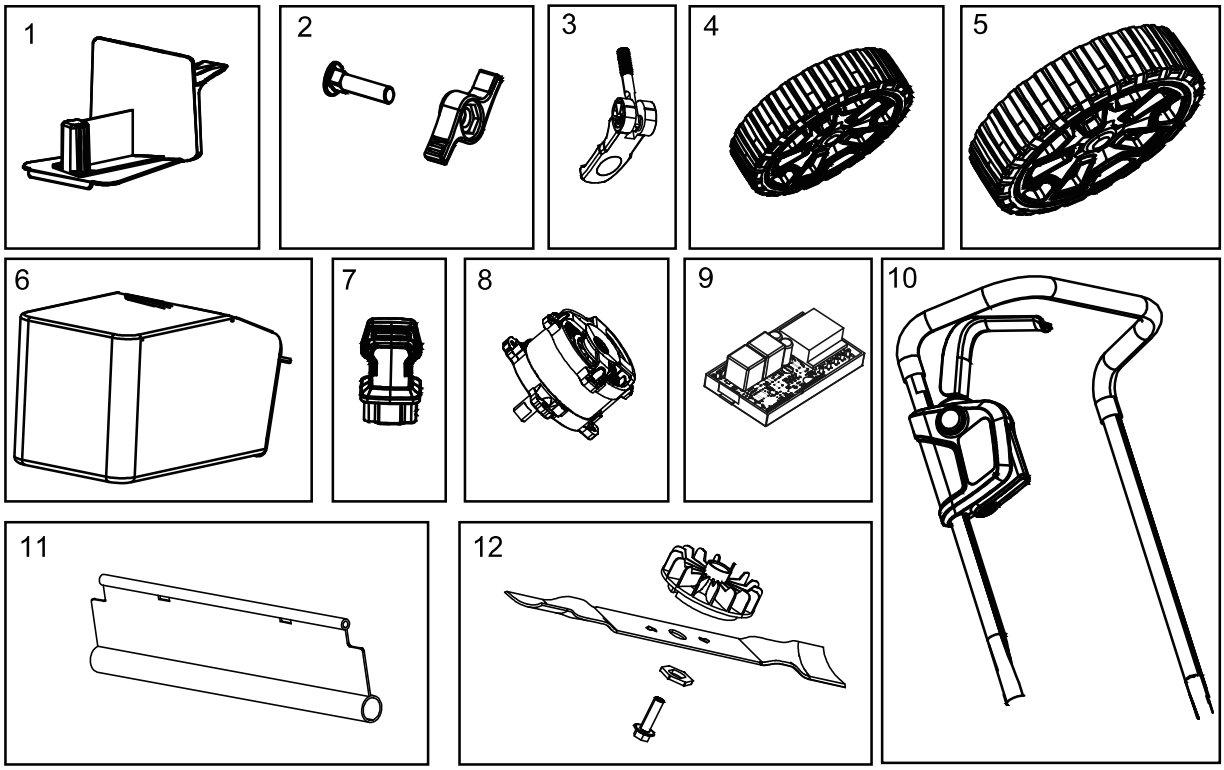

No.	Part No.	Qty.	Description
1	RB341091558	1	Mulch plug kit
2	RB3410835AB	2	Handle bolt / knob
3	R0202434-00	2	Lower handle quick-release lever
4	R0202331-00	2	Front wheel assembly
5	R0202332-00	2	Rear wheel assembly
6	R0202333-00	1	Grass catcher assembly
7	RB322021337	1	Safety key
8	R0202429-00	1	Motor
9	R0202430-00	1	PCBA
10	R0202437-00	1	Upper control assembly
11	R0202435-00	1	Rear shield
12	R0202436-00	1	Blade assembly kit