eXmark®

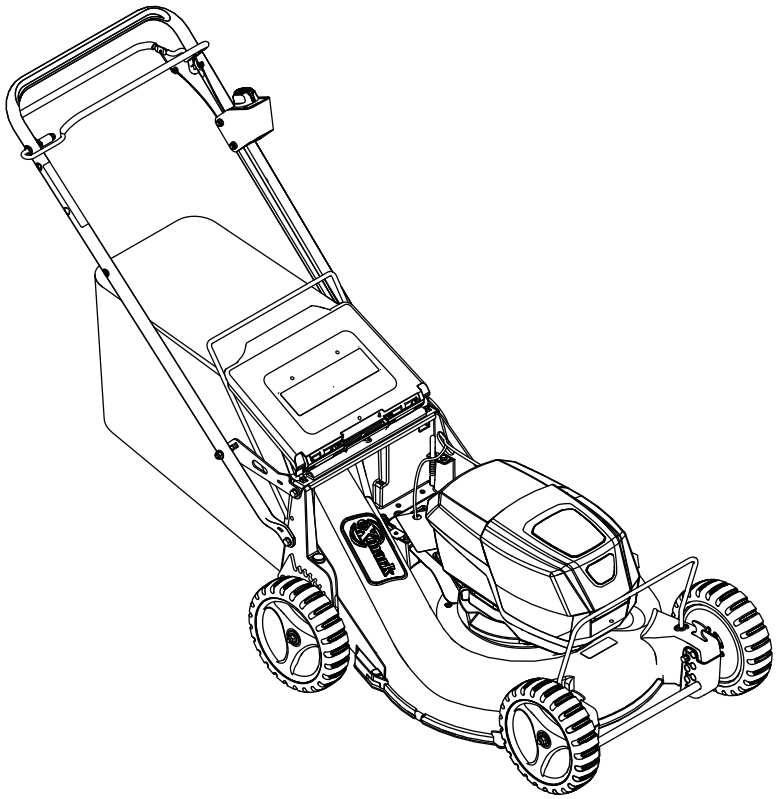

COMMERCIAL 21

V-SERIES

For Serial Nos.
411,294,212 & Higher

Part No. 4506-145 Rev. C

Operator's Manual

⚠ WARNING

CALIFORNIA
Proposition 65 Warning

The power cord on this product contains lead, a chemical known to the State of California to cause birth defects or other reproductive harm. Wash hands after handling.

Use of this product may cause exposure to chemicals known to the State of California to cause cancer, birth defects, or other reproductive harm.

©2022 Exmark Mfg. Co., Inc.
415 Industrial Row
Beatrice, NE 68310

Contact us at www.Exmark.com.
Printed in Mexico
All Rights Reserved

Introduction

CONGRATULATIONS on the purchase of your Exmark Mower. This product has been carefully designed and manufactured to give you a maximum amount of dependability and years of trouble-free operation.

This manual contains operating, maintenance, adjustment, and safety instructions for your Exmark mower.

BEFORE OPERATING YOUR MOWER, CAREFULLY READ THIS MANUAL IN ITS ENTIRETY.

By following the operating, maintenance, and safety instructions, you will prolong the life of your mower, maintain its maximum efficiency, and promote safe operation.

To maximize safety, performance, and proper operation of this machine, it is essential that all operators carefully read and fully understand the contents of the Operator's manual provided with the product. Failure to comply with the operating instructions or receive proper training may result in injury. Go to https://www.Exmark.com for additional safe operation information, such as safety tips, training materials, and Operator's manuals.

If additional information is needed, or should you require trained mechanic service, contact your authorized Exmark equipment dealer or distributor.

All Exmark equipment dealers and distributors are kept informed of the latest methods of servicing and are equipped to provide prompt and efficient service in the field or at their service stations. They carry ample stock of service parts or can secure them promptly for you from the factory.

All Exmark parts are thoroughly tested and inspected before leaving the factory, however, attention is required on your part if you are to obtain the fullest measure of satisfaction and performance.

Whenever you need service, genuine Exmark parts, or additional information, contact an Authorized Service Dealer or Exmark Customer Service and have the model and serial numbers of your product ready.

Figure 1 identifies the location of the model and serial numbers on the product. Write the numbers in the space provided.

This mower is designed to use only Exmark Professional Power System lithium-ion battery pack - P/N 142-8550. This battery pack is designed to be charged only by Exmark Professional Power System battery charger - P/N 142-8383. Using these products for purposes other than their intended use could prove dangerous to you and bystanders.

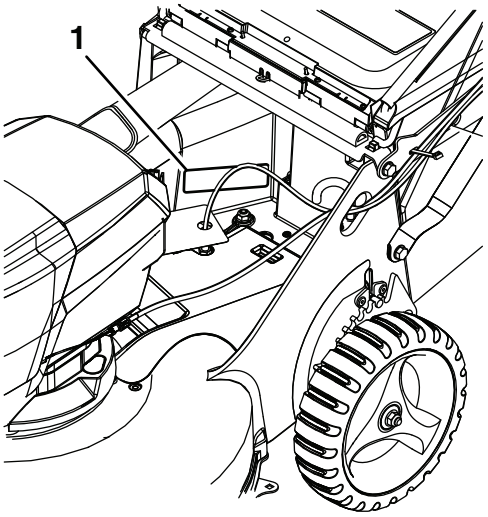

g373133

Figure 1

1. Model and serial number location

Model No. _____

Serial No. _____

For complete warranty details, see https://www.Exmark.com. You may also call us at 402-223-6375 to request a written copy of the product's warranty.



g000502

Figure 2

Safety-alert symbol

This manual uses 2 words to highlight information. **Important** calls attention to special mechanical information and **Note** emphasizes general information worthy of special attention.

Contents

Introduction 3
Safety 5
..... 5
Safety and Instructional Decals 8
Specifications 12
Systems 12
Dimensions 12
Product Overview 13
Operation 13
Controls 13
Before Operation 14
During Operation 15
After Operation 19
Maintenance 20
Recommended Maintenance Schedule(s) 20
Periodic Maintenance 20
Checking the Mower Blade 20
Check for Loose Hardware 22
Check Condition Of Belt 22
Adjustments 22
Adjusting the Self-Propel Drive 22
Cleaning 23
Clean Grass Build-Up Under Deck 23
Cleaning the Discharge Tunnel and Plug 23
Cleaning Under the Belt Cover 24
Cleaning Under the Cover Plate 24
Storage 25
Preparing the Battery Pack for Recycling 25
Troubleshooting 26
California Proposition 65 Warning Information 28

Safety

IMPORTANT SAFETY INSTRUCTIONS

WARNING—When using an electric machine, always read and follow basic safety warnings and instructions to reduce the risk of fire, electric shock, or injury, including the following:

I. Training

1. The operator of the machine is responsible for any accidents or hazards occurring to others or their property.
2. Do not allow children to use or play with the machine, battery pack, or the battery charger; local regulations may restrict the age of the operator.
3. Do not allow children or untrained people to operate or service this device. Allow only people who are responsible, trained, familiar with the instructions, and physically capable to operate or service the device.
4. Before using the machine, battery pack, and battery charger, read all the instructions and cautionary markings on these products.
5. Become familiar with the controls and proper use of the machine, battery pack, and battery charger.

II. Preparation

1. Keep bystanders, especially children and pets, out of the operating area.
2. Do not operate the machine without all guards and safety devices, such as deflectors and grass catchers, in place and functioning properly on the machine.
3. Inspect the area where you will use the machine and remove all objects that could interfere with the operation of the machine or that the machine could throw.
4. Before using the machine, ensure that the blade, blade bolt, and blade assembly are not worn or damaged. Replace any damaged or unreadable labels.
5. Use only the battery pack specified by Exmark. Using other accessories and attachments may increase the risk of injury and fire.
6. Plugging the battery charger into an outlet that is not 120 V can cause a fire or electric shock. Do not plug the battery charger into an outlet other than 120 V. For a different style of connection, use an attachment plug adapter of the proper configuration for the power outlet if needed.
7. Do not use a damaged or modified battery pack or battery charger, which may exhibit unpredictable behavior that results in fire, explosion, or risk of injury.
8. If the supply cord to the battery charger is damaged, contact an Authorized Service Dealer to replace it.
9. Do not use non-rechargeable batteries.
10. Charge the battery pack with only the battery charger specified by Exmark. A charger suitable for 1 type of battery pack may create a risk of fire when used with another battery pack.
11. Charge the battery pack in a well-ventilated area only.
12. Do not expose a battery pack or battery charger to fire or to temperatures higher than 68°C (154°F).
13. Follow all charging instructions and do not charge the battery pack outside of the temperature range specified in the instructions. Otherwise, you may damage the battery pack and increase the risk of fire.
14. Dress properly—Wear appropriate clothing, including eye protection; long pants; substantial, slip-resistant footwear (not barefoot or wearing sandals); and hearing protection. Tie back long hair and do not wear loose clothing or loose jewelry that can get caught in moving parts. Wear a dust mask in dusty operating conditions. Use of rubber gloves is recommended.

III. Operation

1. Contact with the moving blade will cause serious injury. Keep your hands and feet away from the cutting area and all moving parts of the machine. Keep clear of any discharge opening.
2. Using this machine for purposes other than its intended use could prove dangerous to you and bystanders.
3. Disengage the self-propel drive (if equipped) before starting the machine.
4. Do not tilt the machine when starting the motor.
5. Prevent unintentional starting—Ensure that the electric-start button is removed from the ignition before connecting the battery pack and handling the machine.

6. Use your full attention while operating the machine. Do not engage in any activity that causes distractions; otherwise, injury or property damage may occur.
7. When you release the blade-control bar, the motor should shut off and the blade should stop within 3 seconds. If not, stop using your machine immediately and contact an Authorized Service Dealer.
8. Stop the machine, remove the electric-start button, remove the battery pack from the machine, and wait for all movement to stop before adjusting, servicing, cleaning, or storing the machine.
9. Remove the battery pack and electric-start button from the machine whenever you leave it unattended or before changing accessories.
10. Do not force the machine—Allow the machine to do the job better and safer at the rate for which it was designed.
11. Stay alert—Watch what you are doing and use common sense when operating the machine. Do not use the machine while ill, tired, or under the influence of alcohol or drugs.
12. Operate the machine only in good visibility and appropriate weather conditions. Do not operate the machine when there is the risk of lightning.
13. Use extreme caution when reversing or pulling the machine toward you.
14. Keep proper footing and balance at all times, especially on slopes. Mow across the face of slopes, never up and down. Use extreme caution when changing directions on slopes. Do not mow exceedingly steep slopes. Walk, never run with the machine.
15. Do not direct the discharge material toward anyone. Avoid discharging material against a wall or obstruction; material may ricochet toward you. Stop the blade(s) when crossing surfaces other than grass.
16. Watch for holes, ruts, bumps, rocks, or other hidden objects. Uneven terrain could cause you to lose your balance or footing.
17. Wet grass or leaves can cause serious injury if you slip and contact the blade. Avoid mowing in wet conditions or when it is raining.
18. If the machine strikes an object or starts to vibrate, immediately shut off the machine, remove the electric-start button, remove the battery pack, and wait for all movement to stop before examining the machine for damage. Make all necessary repairs before resuming operation.
19. Stop the machine and remove the electric-start button before loading the machine for hauling.
20. Under abusive conditions, the battery pack may eject liquid; avoid contact. If you accidently come into contact with the liquid, flush with water. If the liquid contacts your eyes, seek medical help. Liquid ejected from the battery pack may cause irritation or burns.

IV. Maintenance and Storage

1. Stop the machine, remove the electric-start button, remove the battery pack from the machine, and wait for all movement to stop before adjusting, servicing, cleaning, or storing the machine.
2. Do not attempt to repair the machine except as indicated in the instructions. Have an Authorized Service Dealer perform service on the machine using identical replacement parts.
3. Wear gloves and eye protection when servicing the machine.
4. Sharpen a dull blade on both edges to maintain balance. Clean the blade and ensure that it is balanced.
5. Replace the blade if it is bent, worn, or cracked. An unbalanced blade causes vibration, which could damage the motor or cause personal injury.
6. When servicing the blade, be aware that the blade can still move even though the power source is off.
7. Check the grass collection bag frequently for deterioration or wear, and replace a worn bag with a Exmark [replacement] bag.
8. For best performance, use only genuine Exmark replacement parts and accessories. Other replacement parts and accessories could be dangerous, and such use could void the product warranty.
9. Maintain the machine—Keep cutting edges sharp and clean for the best and safest performance. Keep handles dry, clean, and free from oil and grease. Keep guards in place and in working order. Keep blades sharp. Use identical replacement blades only.

10. Check the machine for damaged parts—If there are damaged guards or other parts, determine whether the machine will operate properly. Check for misaligned and binding moving parts, broken parts, mounting, and any other condition that may affect its operation. Unless indicated in the instructions, have an Authorized Service Dealer repair or replace a damaged guard or part.
11. When the battery pack is not in use, keep it away from metal objects such as paper clips, coins, keys, nails, and screws that can make a connection from 1 terminal to another. Shorting the battery terminals may cause burns or a fire.
12. Check the blade and motor mounting bolts frequently for tightness.
13. When you are not using the machine, store it indoors in a dry, secure place out of the reach of children.
14. CAUTION—A mistreated battery pack may present a risk of fire or chemical burn. Do not disassemble the battery pack. Do not heat the battery pack above 68°C (154°F) or incinerate it. Replace the battery pack with a genuine Exmark battery pack only; using another type of battery pack may cause a fire or explosion. Keep battery packs out of the reach of children and in the original packaging until you are ready to use them.
15. Do not dispose of the battery in a fire. The cell may explode. Check with local codes for possible special disposal instructions.

SAVE THESE INSTRUCTIONS

Safety and Instructional Decals

- Keep all safety signs legible. Remove all grease, dirt and debris from safety signs and instructional labels.
- Replace all worn, damaged, or missing safety signs.
- When replacement components are installed, be sure that current safety signs are affixed to the replaced components.
- If an attachment or accessory has been installed, make sure current safety signs are visible.
- New safety signs may be obtained from your authorized Exmark equipment dealer or distributor or from Exmark Mfg. Co. Inc.
- Safety signs may be affixed by peeling off the backing to expose the adhesive surface. Apply only to a clean, dry surface. Smooth to remove any air bubbles.
- Familiarize yourself with the following safety signs and instruction labels. They are critical to the safe operation of your Exmark commercial mower.



decal94-8072

94-8072

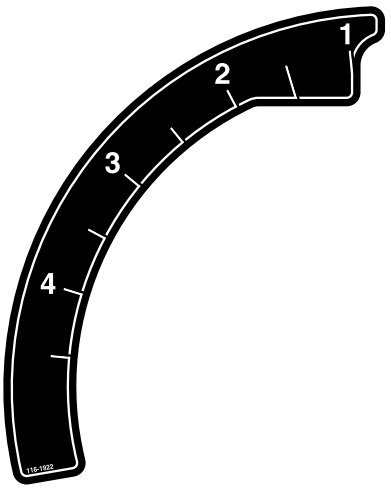

decal116-1922

116-1922

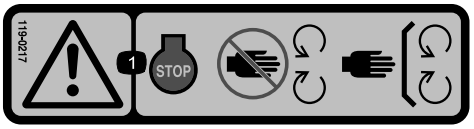

decal119-0217

119–0217

1. Warning—shut off the engine; stay away from moving parts; keep all guards and shields in place.

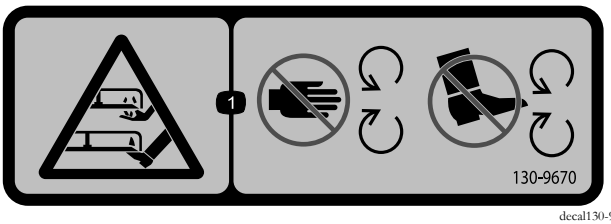

decal130-9670

130-9670

1. Severing hazard of hand or foot; mower blade—keep away from moving parts.



decal133-8054

133-8054

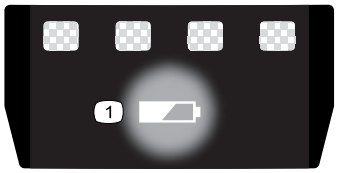

decal137-9461

137-9461

1. Battery charge status

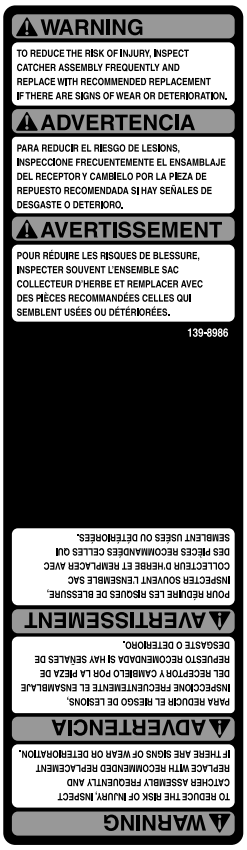

decal139-8986

139-8986



decal142-8395

142-8395

1. Read the Operator's manual.
2. Keep away from open fire or flames.
3. Do not expose to rain.

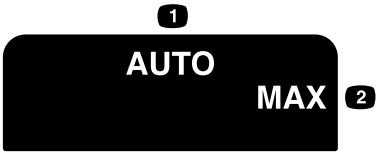

decal142-8830

142-8830

1. Auto
2. Max



decal144-3175

144-3175

1. Read the *Operator's Manual*.
2. To start the machine, squeeze the bar to the handle and press the button.
3. To shut off the machine, release the bar.



decal116-7583

116-7583

1. Warning—read the *Operator's Manual*; do not operate this machine unless you are trained.
2. Thrown object hazard—keep bystanders away.
3. Thrown object hazard—do not operate the mower without the rear discharge plug or bag in place.
4. Cutting/dismemberment hazard of hand or foot, mower blade—stay away from moving parts; keep all guards in place.
5. Warning—wear hearing protection.
6. Cutting/dismemberment hazard of hand or foot, mower blade—do not operate up and down slopes; operate side to side on slopes; shut off the engine before leaving the machine; pick up any debris before mowing; look behind you when moving in reverse.

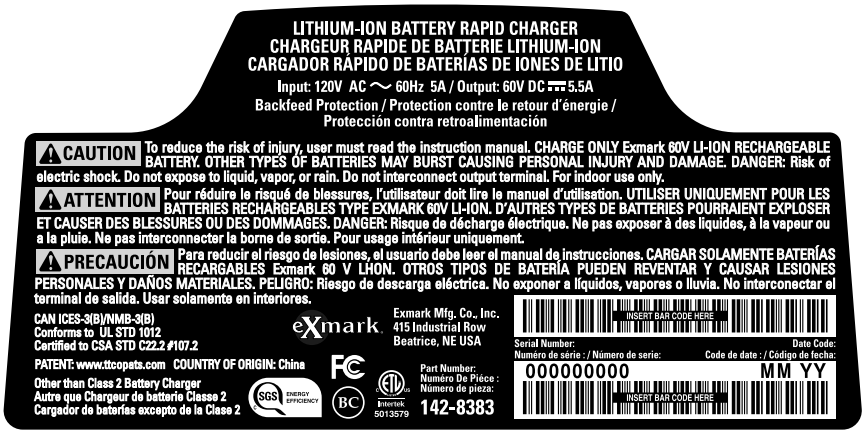

decal142-8393

142-8393

Specifications

Systems

Battery Pack

Part No.	142-8550
Battery pack capacity	7.5 Ah
	405 Wh
Battery manufacturer rating = 60V maximum and 54V nominal. Actual voltage varies with load.	

Battery Charger

Part No.	142-8383
Type	60V MAX Lithium-Ion Battery Rapid Charger
Input	120V AC 60Hz 5.0A
Output	60V DC 5.5A

Appropriate Temperature Ranges

Charge/store the battery pack at	5°C (41°F) to 40°C (104°F)*
Use the battery pack at	-30°C (-22°F) to 49°C (120°F)*
Use the machine at	0°C (32°F) to 49°C (120°F)*

*Charging time will increase if you do not charge the battery pack within this range.

Store the machine, battery pack, and battery charger in an enclosed clean, dry area.

Safety Interlock System

Operator must have the blade control bail depressed to start the motor. Releasing the blade control bail will cause the motor to stop.

Transmission

Variable

Speed Range: 0–3.5 mph (5.6 km/hr)

Cutting Deck

- Cutting Width: 21 inches (53.3 cm)
- Blade Size: (1 ea.): 20.9 inches (53.1 cm)
- Deck: 21 inches rigid. Deck design allows for bagging, or mulching.
- Cutting Height Adjustment:

  Adjusts from 1 inch (2.5 cm) to 4 1/2 inches (11.4 cm) in 1/2 inch (1.3 cm) increments.
- Mulching Kit: Standard on V-Series Units

Dimensions

Curb Weight:

98 lb (44 kg)

Overall Width:

22 inches (55.9 cm)

Overall Length and Height at 2 1/2 inch Cutting Height:

Handle Setting	Length	Height
High	61.00 inches (154.9 cm)	39.00 inches (99.1 cm)
Medium	63.00 inches (160.0 cm)	37.50 inches (95.3 cm)
Low	64.50 inches (163.8 cm)	35.00 inches (88.9 cm)

Product Overview

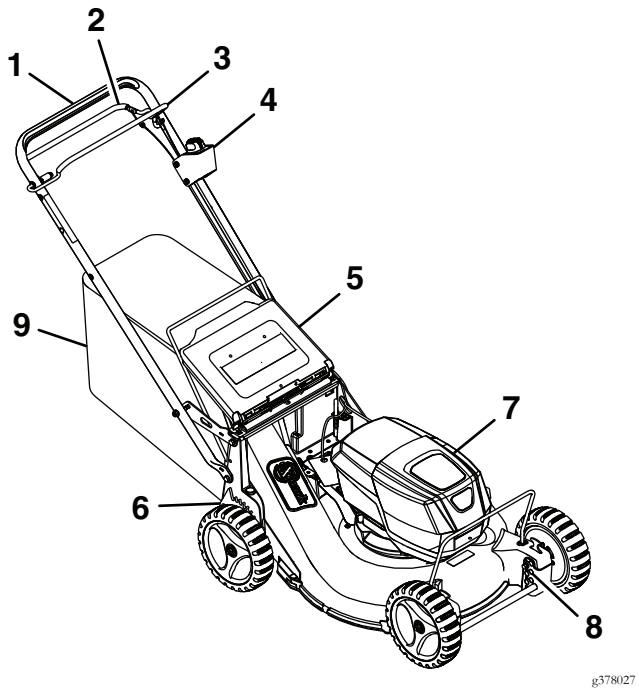

Figure 3

1. Handle
2. Self-propel drive bar
3. Blade-control bar
4. Speed switch and start button
5. Discharge door
6. Rear wheel height adjustment
7. Battery compartment
8. Front wheel height adjustment
9. Grass bag

Operation

Note: Determine the left and right sides of the machine from the normal operating position.

Controls

Note: Become familiar with all the controls before starting the motor and operating the machine.

Blade Control Bail

Located on the upper handle as shown in Figure 4.

When the blade control bail is depressed, the system senses that the operator is in the normal operator's position.

When the blade control bail is released, the system senses that the operator has moved from the normal operating position and will stop the motor.

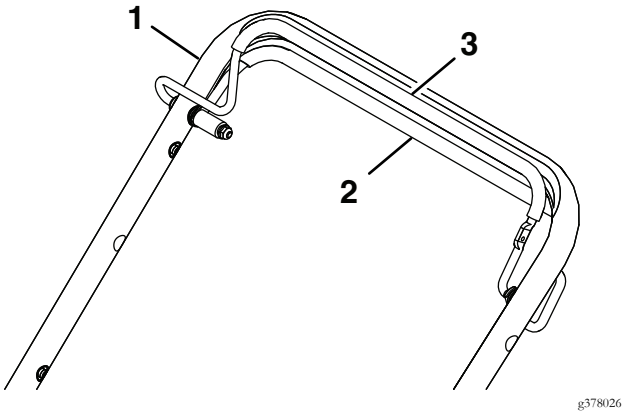

Figure 4

1. Upper handle
2. Self-propel-drive bar
3. Blade-control bar

Self-Propel Drive Bail

Located on the upper handle as shown in Figure 4.

When the self-propel drive bail is squeezed against the handle, the unit ground speed will change based on the distance between the bail and the handle. When this bail is released the unit will stop moving.

Before Operation

Installing the Battery Pack

Important: Use the battery pack only in temperatures that are within the appropriate range.

1. Make sure that the vents on the battery are clear of any dust and debris.
2. Lift up the battery-compartment lid (A of Figure 5).
3. Line up the cavity in the battery pack with the tongue on the machine and slide the battery pack into the compartment until it locks into place (B of Figure 5).
4. Close the battery-compartment lid (C of Figure 5).

   Note: If the battery-compartment lid does not close completely, the battery is not fully installed.

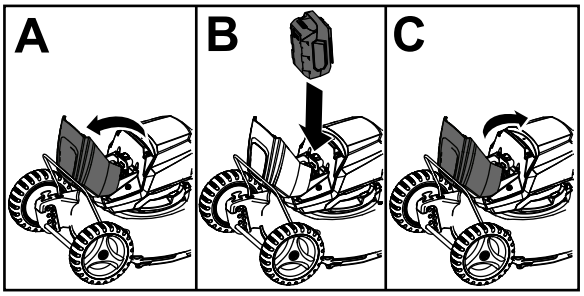

g378076

Figure 5

Handle Adjustment

The height of the handle can be adjusted for comfortable operation. Stand behind the handle to determine the height. To adjust the handle height, position the hardware into one of the three holes in the handle bracket.

Adjusting the Cutting Height

The rear wheels are adjusted together with a height adjustment rod located on the mower housing by the left rear wheel. The front wheels are adjusted separately by removing the front wheel shaft assemblies, adjusting the height, and then replacing the shaft assemblies. The cutting height can be adjusted from 1 inch (25 mm) to 4 1/2 inches (114 mm) in 1/2 inch (12.7 mm) increments.

⚠ WARNING

Adjusting the cutting height levers could bring your hands into contact with a moving blade. A moving blade can cause serious injury.

- **Stop the motor and wait for all movement to stop before adjusting the cutting height.**
- **Do Not put your fingers under the housing when adjusting the cutting height.**

- **Rear Wheel Adjustment:**

  1. Pull the wheel height adjustment rod upward to release the pin from the notch in the adjustment bracket (Figure 6).

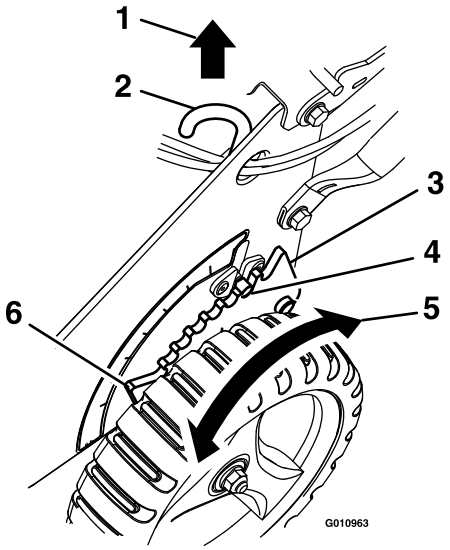

g010963

Figure 6

1.	Pull upward	4.	Pin
2.	Wheel height adjustment rod	5.	Rotate to desired setting
3.	Adjustment bracket	6.	Indicator

  2. Apply downward pressure or lift the housing to rotate the height adjustment bracket. Use the indicator to determine the desired setting.
  3. Release the wheel height adjustment rod to set the pin securely in the desired notch.

- **Front Wheel Adjustment**

  1. Pull up on the height adjuster and pull the front wheel shaft assembly outward as shown in Figure 7.

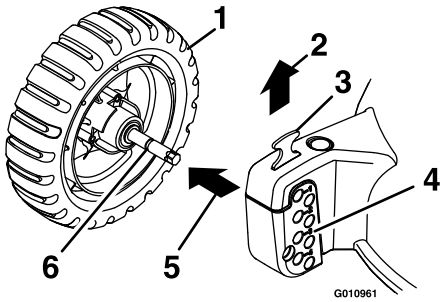

g010961

Figure 7

1. Front wheel shaft assembly
2. Pull up
3. Height adjuster
4. Front quadrant block cut heights
5. Pull outward
6. Shaft groove

2. Insert the front wheel shaft assembly into the desired cut height setting in the front quadrant block. Lower the height adjuster into the groove on the front wheel shaft. Pull and push the wheel shaft assembly to make sure it has locked into place.

During Operation

Starting the Machine

1. Ensure that the battery pack is installed in the machine; refer to **Installing the Battery Pack** (page 14).
2. Insert the electric-start button into the electric starter switch (A of Figure 8).
3. Squeeze the blade-control bar and hold it to the handle (B of Figure 8).
4. Press the electric-start button and keep it pressed until the motor starts (C of Figure 8).

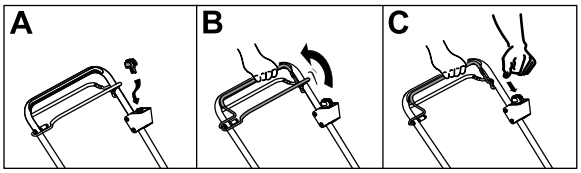

g378095

Figure 8

Stopping the Machine

1. Release the blade-control bar (A of Figure 9).
2. Remove the electric-start button from the electric starter (B of Figure 9).
3. Remove the battery pack.

Note: Whenever you are not using the machine, remove the battery pack.

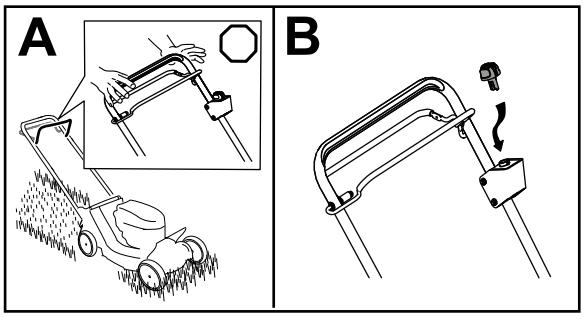

g380663

Figure 9

Operating the Self-Propel Drive

The lawn mower is variable speed, the more you squeeze the drive bail against the handle the faster the machine travels.

1. Start the machine.
2. Squeeze the drive bail against the handle.

Note: You can vary the ground speed by increasing or decreasing the distance between the ground speed control bail and the handle. Lower the control bail to decrease the ground speed when you are making a turn or if the lawn mower is moving too fast for you. If you lower the control bail too far the lawn mower stops self-propelling. Squeeze the ground speed control bail closer to the handle to increase the ground speed. When you hold the ground speed control bail tight against the handle, the lawn mower self-propels at the maximum ground speed. Release the drive bail to stop moving when you use the lawn mower for trimming or whenever you leave the lawn mower.

3. To disengage the self-propel drive, release the drive bail.

Note: The mower comes with freewheeling clutches which make it easier to pull the mower rearward. To disengage the clutches, you may need to push the mower forward one inch (2.5 cm) or more after you release the self-propel drive bail.

Adjusting the Blade Speed

This machine has 2 blade-speed settings: "AUTO" and "MAX".

- In the "AUTO" position, the blade speed adjusts automatically for greater efficiency. The machine detects changes in the cutting conditions and increases the blade speed as needed to maintain the quality of cut.
- In the "MAX" position, the blade speed remains at the maximum speed at all times.

Turn the key in the key switch to either position to adjust the blade speed setting (Figure 10).

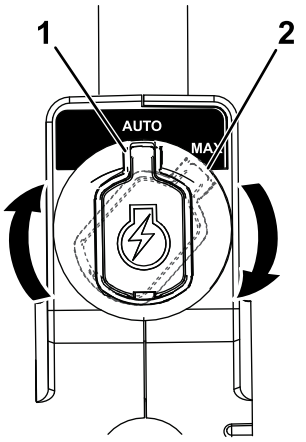

Figure 10

1. Auto position
2. Max position

Using the Mulch Plug

Occasionally you may wish to use the mulch plug to mulch the grass and leaf clippings back into the lawn.

- Installing the Mulch Plug:
  1. Stop the motor and wait for all moving parts to stop.
  2. Remove the grass bag if it is on the mower.
  3. Raise the discharge door and insert the mulch plug into the discharge opening. The lip on the plug will snap into the mower housing.
  4. Lower the discharge door.

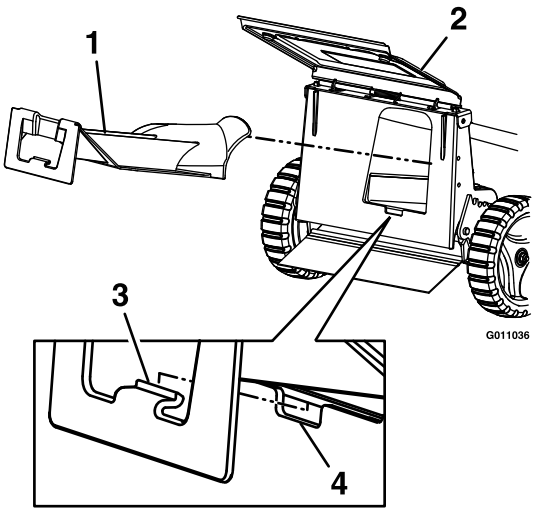

Figure 11

1. Mulch plug
2. Discharge door
3. Lip
4. Mower housing

- Remove the Mulch Plug:
  1. Stop the motor and wait for all moving parts to stop.
  2. Remove the grass bag if it is on the mower.
  3. Raise the discharge door and pull the mulch plug out of the discharge tunnel..
  4. Lift the discharge door.

  Note: When grass is thick and lush, clippings may collect on and around the discharge tunnel plug. This may make it difficult to remove the plug. Clean the plug thoroughly after each use.

Test Using the Grass Bag

1. Install the empty grass bag on the discharge tunnel.
2. Squeeze the blade control bail against the handle and start the machine.
3. The bag should begin to inflate, indicating that the blade is engaged and rotating.
4. Release the blade control bail. If the bag does not immediately deflate, it indicates that the blade is still rotating.

Using the Grass Bag

- Installing the Grass Bag
  1. Stop the motor and wait for all moving parts to stop.
  2. Open the rear door.
  3. Grasp the handle on the bag and set the rear of the bag frame onto the door hinge bracket (Figure 12).

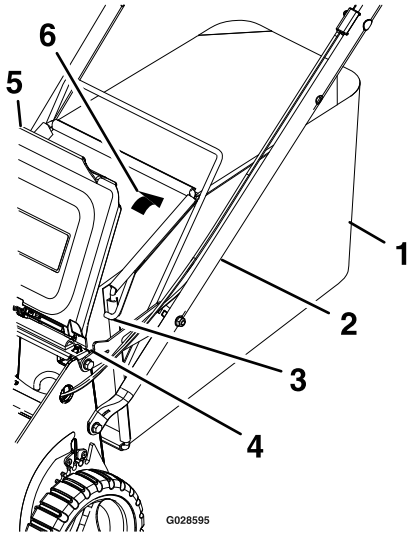

g028595

Figure 12

1. Bag
2. Handle
3. Bag frame
4. Door hinge bracket
5. Rear door
6. Lower

  4. Once the bag is seated, lower the rear door onto the bag.
- Mowing with the Grass Bag

⚠ WARNING

A worn grass bag could allow small stones and other similar debris to be thrown in the operator's or bystander's direction. Thrown objects can result in serious personal injury or death to the operator or bystanders.

Check the grass bag frequently. If it is damaged, install a new Exmark replacement bag.

Cut the grass until the bag is full.

Note: **Do Not** overfill the bag.

- Removing the Grass Bag
  1. Stop the motor and wait for all moving parts to stop.
  2. Raise the rear discharge door and grasp the handle on the bag.
  3. Lift the bag off of the lawn mower and lower the rear discharge door.
  4. Gradually tip the bag forward to empty the clippings.
  5. To install the bag, refer to the section on Installing the Grass Bag.

⚠ DANGER

If the rear discharge door does not close completely, the lawn mower could throw objects. Thrown objects can result in serious personal injury or death to the operator or bystanders.

- **Never open the door to the rear discharge opening when the blade is still running.**
- **If you cannot close the door because the grass clippings clog the discharge area, stop the engine and gently move the discharge door handle back and forth until you can close the door completely. If you still cannot close the door, remove the obstruction with a stick, not your hand.**

Operating Tips

- Review the Safety section and read this manual carefully before operating the lawn mower.
- Set the speed switch to the "MAX" position for the best cutting results.
- Maintain a sharp blade throughout the cutting season. Periodically file down nicks on the blade. Replace the blade when necessary with an original Exmark replacement blade.

Cutting Grass

- Grass grows at different rates at different times of the year. In the summer heat, it is best to cut grass at the 2 1/2 inch (64 mm), 3 inch (76 mm), or 3 1/2 inch (90 mm) cutting height settings. Cut only about a third of the grass blade at a time. Do Not cut below the 2 1/2 inch (64 mm) setting unless the grass is sparse or it is late fall when grass growth begins to slow down.
- When cutting grass over 6 inches (15 cm) tall, first mow at the highest cutting height setting and walk slower; then mow again at a lower setting for the best lawn appearance. If the grass is too long and the grass clumps on top of the lawn, the lawn mower may plug and cause the motor to stall.
- Alternate the mowing direction. This helps disperse the clippings over the lawn for even fertilization.
- If the finished lawn appearance is unsatisfactory, try one or more of the following:
  - Sharpen the blade.
  - Walk at a slower pace while mowing.
  - Cut the grass more frequently.
  - Overlap cutting swaths instead of cutting a full swath with each pass.
  - Set the desired cutting height on the front wheels. Set the rear wheels one to two notches higher. For example, set the front wheels at 2 1/2 inches (64 mm) and the rear wheels at 3 inches (76 mm).

Cutting Leaves

- After cutting the lawn, ensure that half of the lawn shows through the cut leaf cover. You may need to make more than one pass over the leaves.
- For light leaf coverage, set all the wheels at the same cutting height setting.
- If there are more than 5 inches (12.7 cm) of leaves on the lawn, set the front cutting height one or two notches higher than the rear cutting height. This makes it easier to feed the leaves under the lawn mower deck.
- Slow down your mowing speed if the lawn mower does not cut the leaves finely enough.
- If you mow over oak leaves, you can add lime to the grass in the spring to reduce the acidity of the oak leaves.

After Operation

Removing the Battery Pack from the Machine

1. Lift up the battery-compartment lid.
2. Press the battery-pack latch to release the battery pack and remove the battery pack.
3. Close the battery-compartment lid.

Transporting the Machine

- Use extreme care when loading and unloading the machine into a trailer or truck.
- Use full width ramps for loading the machine into a trailer or truck.
- Tie the machine down securely using straps, chains, cable or ropes. If possible both front and rear straps should be directed down and outward from the machine.
- Be sure to remove the battery during transport.

Charging the Battery Pack

Important: The battery pack is not fully charged when you purchase it. Before using the tool for the first time, place the battery pack in the charger and charge it until the LED display indicates the battery pack is fully charged. Read all safety precautions.

Important: Charge the battery pack only in temperatures that are within the appropriate range.

Note: At any time, press the battery-charge-indicator button on the battery pack to display the current charge (LED indicators).

1. Ensure that the vents on the battery and charger are clear of any dust and debris.

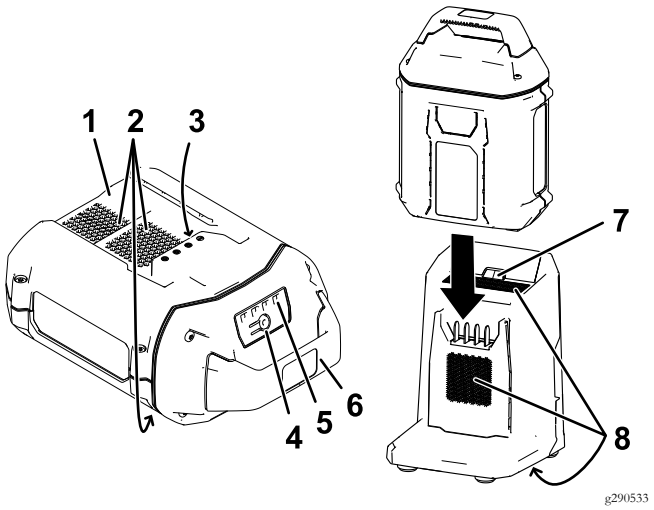

Figure 13

1. Battery pack cavity
2. Battery pack venting areas
3. Battery pack terminals
4. Battery-charge-indicator button
5. LED indicators (current charge)
6. Handle
7. Charger LED indicator light
8. Charger venting areas

2. Line up the cavity in the battery pack (Figure 13) with the tongue on the charger.
3. Slide the battery pack into the charger until it is fully seated (Figure 13).
4. To remove the battery pack, slide the battery backward out of the charger.
5. Refer to the following table to interpret the LED indicator light on the battery charger.

Indicator light	Indicates
Off	No battery pack inserted
Green blinking	Battery pack is charging
Green	Battery pack is charged
Red	Battery pack and/or battery charger is over or under the appropriate temperature range
Red blinking	Battery pack charging fault*

Important: The battery can be left on the charger for short periods between uses.

If the battery will not be used for longer periods, remove the battery from the charger.

Maintenance

Note: Determine the left and right sides of the machine from the normal operating position.

Recommended Maintenance Schedule(s)

Maintenance Service Interval	Maintenance Procedure
After the first 25 hours	• Tighten any loose fasteners.
Before each use or daily	• Check the mower blade. • Check for loose hardware. • Clean the grass build-up from under the deck. • Clean the discharge tunnel and plug. • Check the stopping time of the blade brake. The blade must stop within 3 seconds of releasing the blade-control bar; if it does not, contact an Authorized Service Dealer for repair.
Every 40 hours	• Check the condition of the belt(s).
Every 50 hours	• Clean under the belt cover. • Clean under the cover plate.
Every 100 hours	• Tighten any loose fasteners.

Periodic Maintenance

Checking the Mower Blade

Service Interval: Before each use or daily

Always mow with a sharp blade. A sharp blade cuts cleanly and without tearing or shredding the grass blade.

1. Stop the motor and wait for all moving parts to stop.
2. Remove the electric-start button and the battery pack from the machine.
3. Tip the lawn mower onto its right side.
4. Inspect the blade for sharpness and wear, especially where the flat and the curved parts meet. Because sand and abrasive material can wear away the metal that connects the flat and curved parts of the blade, check the blade before using the lawn mower. If you notice a slot or wear, replace the blade.

   Note: For the best performance, install a new blade before the cutting season begins. During the year, file down any small nicks to maintain the cutting edge.

⚠ DANGER

A worn or damaged blade can break. A piece of the blade could be thrown into the operator's or bystander's area, resulting in serious personal injury or death.

- **Inspect the blade periodically for wear or damage.**
- **Replace a worn or damaged blade.**

If it is necessary to remove the blade for replacement or sharpening, complete the following steps:

A. To remove the blade, use a block of wood to hold the blade steady (see Figure 14). Make sure to grasp the end of the blade using a rag or a thickly padded glove. Remove the blade bolt, blade support, and blade.

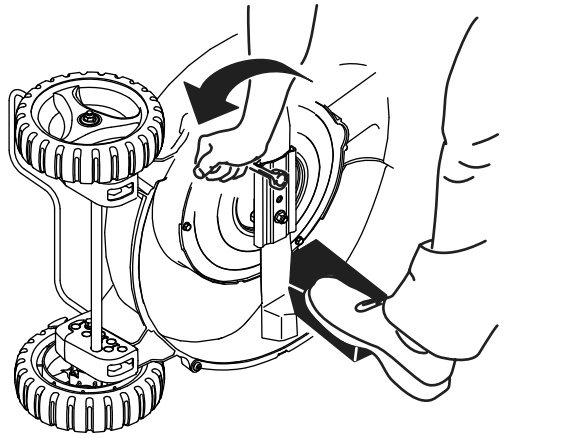

g268708

Figure 14

B. For Sharpening: File the top side of the blade to maintain its original cutting angle (Figure 15 A and B) and inner cutting edge radius (Figure 15 A). The blade will remain balanced if you remove the same amount of material from both cutting edges.

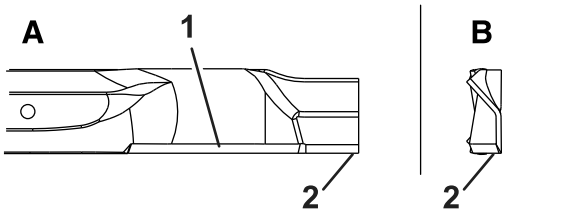

g268707

Figure 15

1. Inner cutting edge radius 2. Cutting angle

C. Check the balance of the blade by placing the center hole of the blade over a nail or screwdriver shank clamped horizontally in a vise (Figure 16). If either end of the blade rotates downward, file that end (not the cutting edge). The blade is properly balanced when neither end drops.

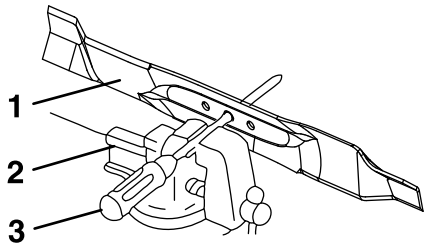

g268706

Figure 16

1. Blade
2. Vise
3. Screwdriver

D. For Installation: Make sure to grasp the end of the blade using a rag or a thickly padded glove.

Install a sharp, balanced Exmark blade, blade support, and blade bolt. The sail of the blade must point toward the top of the lawn mower housing for proper installation. Torque the blade bolt to 44-56 ft-lb (47-61 N m).

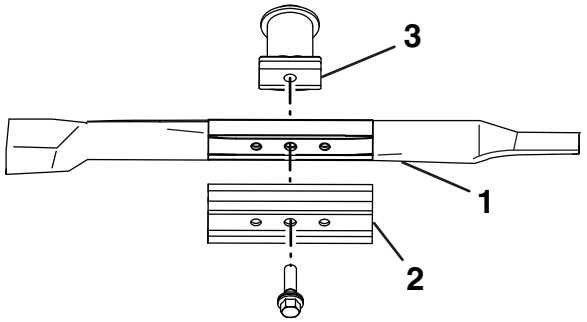

g373083

Figure 17

1. Blade
2. Blade support
3. Blade drive

5. Return the lawn mower to its upright position.

Check for Loose Hardware

Service Interval: Before each use or daily

1. Stop motor, wait for all moving parts to stop.
2. Visually inspect machine for any loose hardware or any other possible problem. Tighten hardware or correct the problem before operating.

Check Condition Of Belt

Service Interval: Every 40 hours

1. Stop motor, wait for all moving parts to stop.
2. Remove the electric-start button and the battery pack from the machine.
3. Remove the belt cover to the lawn mower housing.
4. Check the belt for cracks, frayed edges, burn marks or any other damage.
5. Replace the damaged belt.

Adjustments

Note: Wait for all moving parts to stop and remove the battery pack before servicing, cleaning, or making any adjustments to the unit.

Adjusting the Self-Propel Drive

If the lawn mower does not self-propel or has a tendency to creep forward when the control bail is released, adjust the drive cable nuts as shown in (Figure 19).

⚠ DANGER

Checking the operation of the mower with the belt cover removed will allow debris to be thrown in the operator's or bystander's direction and can result in serious personal injury or death.

Do Not operate the unit when cover is not in place.

1. Stop the motor and wait for all moving parts to stop.
2. Remove the electric-start button and the battery pack from the machine.
3. Remove the belt cover by pulling upward on the back of the cover to unsnap the front and back cover tabs. Remove any debris under the cover.

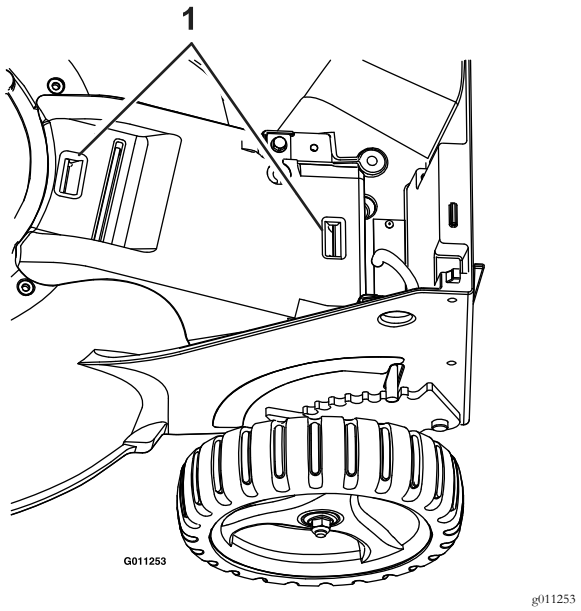

g011253

Figure 18

1. Belt cover tabs

4. If the lawn mower does not self propel with bail engaged, tighten the belt by turning the drive cable nuts clockwise. To maximize belt life, Do Not overtighten the belt.

   If the lawn mower creeps forward without the bail engaged, loosen the belt by turning the drive cable nuts counterclockwise.

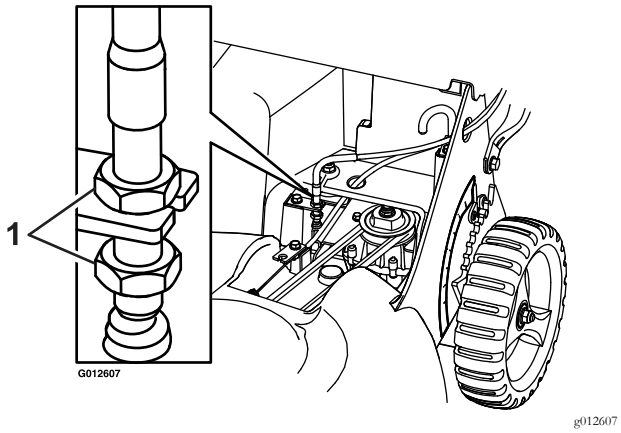

Figure 19

1. Adjustment of drive cable nuts

5. Reinstall the belt cover by pushing down on the rear first and then snapping the front onto the mower housing.
6. Check the operation for desired drive control.
7. Repeat steps 3 through 6 as necessary for further adjustment.

   Note: Adjustment to obtain desired ground speed at full bail travel may be made in order to accommodate slower speeds.

Cleaning

Clean Grass Build-Up Under Deck

Service Interval: Before each use or daily

1. To ensure the best performance, keep the underside of the lawn mower housing clean.

⚠ CAUTION

The mower may dislodge material from under the mower housing.

- **Wear eye protection.**
- **Stay in the operating position (behind the handle).**
- **Do Not allow bystanders in the area.**

Scraping Method

If washing does not remove all debris from under the lawn mower, scrape it clean.

1. Shut off the machine and wait for all moving parts to stop.
2. Remove the electric-start button and the battery pack from the machine.
3. Tip the lawn mower onto its right side.
4. Remove the dirt and grass clippings with a hardwood scraper. Avoid burrs and sharp edges.
5. Turn the lawn mower upright.

Cleaning the Discharge Tunnel and Plug

Service Interval: Before each use or daily

Always be sure that the discharge tunnel door closes securely when you release the handle. If the debris prevents the discharge door from closing securely, clean the inside of the discharge tunnel and the door thoroughly.

⚠ WARNING

Grass clippings and other objects can be thrown from an open discharge tunnel. Thrown objects can cause serious injury or kill the operator or bystanders.

Never start or operate the lawn mower unless one of the following is true:

- **Mulch Mode:**
  - **The discharge tunnel plug is locked securely in the discharge tunnel.**
  - **The discharge tunnel door is closed against frame.**
- **Bag Mode:**
  - **The discharge tunnel plug is removed.**
  - **The grass bag is locked in place.**
  - **The discharge tunnel door is closed against bag.**

Cleaning Under the Belt Cover

Service Interval: Every 50 hours

1. Stop the motor and wait for all moving parts to stop.
2. Remove the electric-start button and battery pack from the machine.
3. Pull upward on the back of the cover to unsnap the front and back cover tabs (see Figure 18).
4. Lift off the cover and brush out all the debris around the belt area.
5. Install the belt cover by pushing down on the rear first and then snapping the front onto the mower housing.

Cleaning Under the Cover Plate

Service Interval: Every 50 hours

1. Stop the motor and wait for all moving parts to stop.
2. Remove the electric-start button and battery pack from the machine.
3. Tip the lawn mower onto its right side.
4. Remove the blade bolt, blade support, and the blade (see Figure 20).

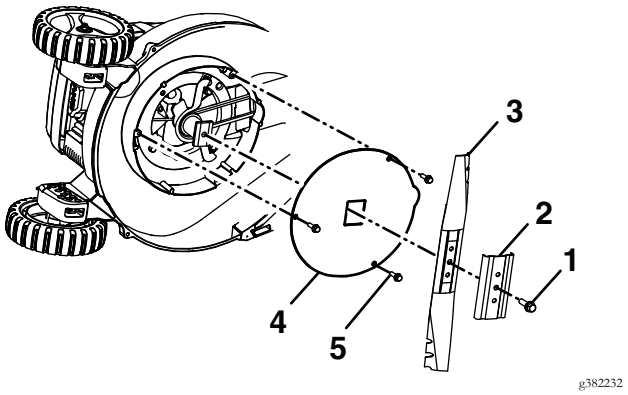

Figure 20

1. Blade bolt
2. Blade support
3. Blade
4. Cover plate
5. Screw

5. Remove the three screws holding the cover plate onto the unit (see Figure 20).
6. Remove the cover plate and brush or blow all the debris from under the plate. Reinstall the cover plate.
7. Install the blade, blade support, and the blade bolt. Torque the blade bolt to 44-56 ft-lb (47-61 N m).
8. Turn the lawn mower upright.
9. Reinstall the electric-start button and battery pack.

Storage

To prepare the machine for off-season storage, perform the recommended maintenance procedures; refer to Maintenance (page 20).

Always shut off the machine, remove the battery pack, and wait for all moving parts to stop before adjusting, servicing, cleaning, or storing it.

Store the machine in a cool, clean, dry place. Cover the machine to keep it clean and protected.

Important: Store the machine, battery pack, and charger only in temperatures that are within the appropriate range; refer to ((page)).

Important: If you are storing the battery pack for the off-season, charge it until 2 or 3 LED indicators turn green on the battery. Do not store a fully charged or fully depleted battery. When you are ready to use the machine again, charge the battery pack until the indicator light turns green on the charger or all 4 LED indicators turn green on the battery.

1. Disconnect the machine from the power supply (i.e., remove the battery pack) and check for damage after use.
2. Do not store the machine with the battery pack installed.
3. Store the machine, battery pack, and battery charger in an enclosed, clean, dry well-ventilated place that is inaccessible to children.
4. Keep the machine, battery pack, and battery charger away from corrosive agents such as garden chemicals and de-icing salts.
5. To reduce the risk of serious personal injury, do not store the battery pack outside or in vehicles.
6. Remove grass clippings, dirt, and grime from the external parts of the motor, the shrouding, and the top of the mower housing.
7. Clean under the machine; refer to (**Clean Grass Build-Up Under Deck** (page 23)).
8. Check the condition of the blade; refer to (**Checking the Mower Blade** (page 20)).
9. Tighten all nuts, bolts, and screws.
10. Touch up all rusted or chipped paint surfaces with paint available from an Authorized Service Dealer.

Preparing the Battery Pack for Recycling

Important: Upon removal, cover the terminals of the battery pack with heavy-duty adhesive tape. Do not attempt to destroy or disassemble the battery pack or remove any of its components.

	Lithium-ion battery packs labeled with the Call2Recycle seal can be recycled at any participating retailer or battery recycling facility in the Call2Recycle program (US and Canada only). To locate a participating retailer or facility closest to you, please call 1-800-822-8837 or visit www.call2recycle.org. If you cannot locate a participating retailer or facility nearby, or if your rechargeable battery is not labeled with the Call2Recycle seal, please contact Exmark Customer Care at (402)-223-6375 or your local municipality for more information on how to responsibly recycle the battery.

Troubleshooting

Important: It is essential that all operator safety mechanisms be connected and in proper operating condition prior to mower use.

When a problem occurs, Do Not overlook the simple causes. For example: starting problems could be caused by a discharged battery.

The following table lists some of the common causes of trouble. If a problem continues, contact an Authorized Service Dealer.

Problem	Possible Cause	Corrective Action
The machine does not run or does not run continuously.	1. The battery is not fully installed in the machine. 2. The battery pack is not charged. 3. The battery pack is damaged. 4. There is another electrical problem with the machine.	1. Remove and then replace the battery into the machine, making sure that it is fully installed and latched. 2. Remove the battery pack from the machine and charge it. 3. Replace the battery pack. 4. Contact an Authorized Service Dealer.
The machine does not reach full power.	1. The battery pack charge capacity is too low. 2. The underside of the machine contains clippings and debris.	1. Remove the battery pack from the machine and fully charge the battery pack. 2. Clean the underside of the machine.
The machine or motor is producing excessive vibration or noise.	1. The blade is bent or is out of balance. 2. The blade mounting nuts are loose. 3. The underside of the machine contains clippings and debris. 4. The motor mounting bolts are loose.	1. Balance the blade. If the blade is bent, replace it. 2. Tighten the blade mounting nuts. 3. Clean the underside of the machine. 4. Tighten the motor mounting bolts.
The is an uneven cutting pattern.	1. All 4 wheels are not at the same height. 2. The blade is dull. 3. You are mowing in the same pattern repeatedly. 4. The underside of the machine contains clippings and debris.	1. Place all 4 wheels at the same height. 2. Sharpen and balance the blade. 3. Change the mowing pattern. 4. Clean the underside of the machine.
The discharge chute plugs up.	1. The throttle lever is not in the Fast position. 2. The cutting height is too low. 3. You are mowing too fast. 4. The grass is wet. 5. The underside of the machine contains clippings and debris.	1. Move the throttle lever to the Fast position. 2. Raise the cutting height. 3. Slow down. 4. Allow the grass to dry before mowing. 5. Clean the underside of the machine.
The machine does not self-propel.	1. The self-propel drive cable is out of adjustment or is damaged. 2. There is debris under the belt cover.	1. Adjust the self-propel drive cable. Replace the cable if necessary. 2. Clean the debris from under the belt cover.

Problem	Possible Cause	Corrective Action
The machine is producing a beeping sound.	1. The battery pack is not charged.	1. Remove the battery pack from the machine and charge it.
	2. The machine is in an unsafe position for operation.	2. Ensure that the machine is not at an extreme angle while operating.
	3. The machine is overloaded.	3. Cut the grass at a higher height of cut or walk at a slower pace while mowing.
	4. There is another electrical problem with the machine.	4. Attempt the other troubleshooting actions, if the alarm still sounds, contact an Authorized Service Dealer.
The battery pack loses charge quickly.	1. The battery pack is over or under the appropriate temperature range.	1. Move the battery pack to a place where it is dry and the temperature is between 5°C (41°F) and 40°C (104°F).
	2. The machine is overloaded	2. Work at a slower pace.
The battery charger is not working.	1. The battery charger is over or under the appropriate temperature range.	1. Unplug the battery charger and move it to a place where it is dry and the temperature is between 5°C (41°F) and 40°C (104°F).
	2. The outlet that the battery charger is plugged into does not have power.	2. Contact your licensed electrician to repair the outlet.
The LED indicator light on the battery charger is red.	1. The battery charger and/or battery pack is over or under the appropriate temperature range.	1. Unplug the battery charger and move the battery charger and battery pack to a place where it is dry and the temperature is between 5°C (41°F) and 40°C (104°F).
The LED indicator light on the battery charger is blinking red.	1. There is an error in the communication between the battery pack and the charger.	1. Remove the battery pack from the battery charger, unplug the battery charger from the outlet, and wait 10 seconds. Plug the battery charger into the outlet again and place the battery pack on the battery charger. If the LED indicator light on the battery charger is still blinking red, repeat this procedure again. If the LED indicator light on the battery charger is still blinking red after 2 attempts, properly dispose of the battery pack at a battery recycling facility.
	2. The battery pack is weak.	2. Contact your authorized service dealer if the battery is in warranty, or properly dispose of the battery pack at a battery recycling facility.

California Proposition 65 Warning Information

What is this warning?

You may see a product for sale that has a warning label like the following:



WARNING: Cancer and Reproductive Harm—www.p65Warnings.ca.gov.

What is Prop 65?

Prop 65 applies to any company operating in California, selling products in California, or manufacturing products that may be sold in or brought into California. It mandates that the Governor of California maintain and publish a list of chemicals known to cause cancer, birth defects, and/or other reproductive harm. The list, which is updated annually, includes hundreds of chemicals found in many everyday items. The purpose of Prop 65 is to inform the public about exposure to these chemicals.

Prop 65 does not ban the sale of products containing these chemicals but instead requires warnings on any product, product packaging, or literature with the product. Moreover, a Prop 65 warning does not mean that a product is in violation of any product safety standards or requirements. In fact, the California government has clarified that a Prop 65 warning "is not the same as a regulatory decision that a product is 'safe' or 'unsafe.'" Many of these chemicals have been used in everyday products for years without documented harm. For more information, go to https://oag.ca.gov/prop65/faqs-view-all.

A Prop 65 warning means that a company has either (1) evaluated the exposure and has concluded that it exceeds the "no significant risk level"; or (2) has chosen to provide a warning based on its understanding about the presence of a listed chemical without attempting to evaluate the exposure.

Does this law apply everywhere?

Prop 65 warnings are required under California law only. These warnings are seen throughout California in a wide range of settings, including but not limited to restaurants, grocery stores, hotels, schools, and hospitals, and on a wide variety of products. Additionally, some online and mail order retailers provide Prop 65 warnings on their websites or in catalogs.

How do the California warnings compare to federal limits?

Prop 65 standards are often more stringent than federal and international standards. There are various substances that require a Prop 65 warning at levels that are far lower than federal action limits. For example, the Prop 65 standard for warnings for lead is 0.5 µg/day, which is well below the federal and international standards.

Why don't all similar products carry the warning?

- Products sold in California require Prop 65 labelling while similar products sold elsewhere do not.
- A company involved in a Prop 65 lawsuit reaching a settlement may be required to use Prop 65 warnings for its products, but other companies making similar products may have no such requirement.
- The enforcement of Prop 65 is inconsistent.
- Companies may elect not to provide warnings because they conclude that they are not required to do so under Prop 65; a lack of warnings for a product does not mean that the product is free of listed chemicals at similar levels.

Why does Exmark include this warning?

Exmark has chosen to provide consumers with as much information as possible so that they can make informed decisions about the products they buy and use. Exmark provides warnings in certain cases based on its knowledge of the presence of one or more listed chemicals without evaluating the level of exposure, as not all the listed chemicals provide exposure limit requirements. While the exposure from Exmark products may be negligible or well within the "no significant risk" range, out of an abundance of caution, Exmark has elected to provide the Prop 65 warnings. Moreover, if Exmark does not provide these warnings, it could be sued by the State of California or by private parties seeking to enforce Prop 65 and subject to substantial penalties.

Notes:

Notes:

Service Record

Date:	Description of Work Done:	Service Done By:

EXMARK ACCESSORIES AND OPTIONS*

MID-MOUNT RIDING ACCESSORIES AND OPTIONS

CUSTOM RIDE SEAT SUSPENSION SYSTEM
FULL SUSPENSION SEAT
DECK LIFT ASSIST KIT
HITCH KIT
LIGHT KIT
12V POWER PORT
MICRO-MULCH SYSTEM
OPERATOR CONTROLLED DISCHARGE
SUN SHADE
TRASH CONTAINER
TURF STRIPER
ULTRA VAC COLLECTION SYSTEM
ULTRA VAC QUICK DISPOSAL SYSTEM

OUT-FRONT RIDING ACCESSORIES AND OPTIONS

CUSTOM RIDE SEAT SUSPENSION SYSTEM
DUAL-TAIL WHEEL
FLOOR PAN EXTENDER
HITCH KIT
LIGHT KIT
MICRO-MULCH SYSTEM
ROLL OVER PROTECTION SYSTEM (ROPS)
SNOW BLADE
SNOWBLOWER
SUN SHADE
TRASH CONTAINER
ULTRA VAC COLLECTION SYSTEM
ULTRA VAC QUICK DISPOSAL SYSTEM
WEATHER CAB

WALK-BEHIND ACCESSORIES AND OPTIONS

GRASS CATCHER
MICRO-MULCH SYSTEM
TURF STRIPER
STANDON

*Some accessories and options not available for some models.

Place Model No. and Serial No. Label Here (Included in the Literature Pack) or Fill in Below

Model No. _____

Serial No. _____

Date Purchased _____

Engine Model No. and Spec. No. _____

Engine Serial No. (E/No) _____

©2022 Exmark Mfg. Co., Inc.
All Rights Reserved

415 Industrial Row
Beatrice, NE 68310
(402) 223-6375
Fax (402) 223-5489

Part No. 4506-145 Rev. C
Printed in Mexico



www.exmark.com