Installation Manual

Installation and Appliance Setup

INSTALLER: Leave this manual with party responsible for use and operation.
OWNER: Retain this manual for future reference.

***NOTICE: DO NOT** discard this manual!*

outdoor lifestyles
by hearth & home technologies®

GAS-FIRED
C UL US
LISTED

ODCOUG-36NR
ODCOUG-36TS
ODCOUG-42NR
ODCOUG-42TS

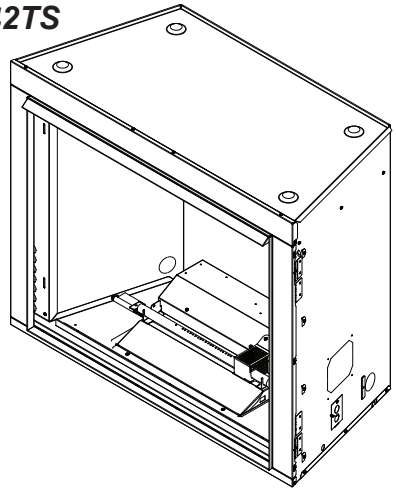

⚠ WARNING! Risk of Fire!

Do not install glass doors on this fireplace. Glass doors could cause overheating of adjacent structures.

⚠ DANGER

FIRE OR EXPLOSION HAZARD

If you smell gas:

- Shut off gas to the appliance.
- Extinguish any open flame.
- If odor continues, leave the area immediately.
- After leaving the area, call your gas supplier or fire department.
- Failure to follow these instructions could result in fire or explosion, which could cause property damage, personal injury, or death.

⚠ WARNING

Do not store or use gasoline or other flammable vapors and liquids in the vicinity of this or any other appliance

An LP-cylinder not connected for use shall not be stored in the vicinity of this or any other appliance.

⚠ WARNING: For outdoor use only.
Installation and service must be performed by a qualified installer, service agency, or the gas supplier.

⚠ WARNING: Improper installation, adjustment, alteration, service or maintenance can cause injury or property damage. Read the installation, operating and maintenance instructions thoroughly before installing or servicing this equipment.

⚠ WARNING: If the information in this manual is not followed exactly, a fire or explosion may result causing property damage, personal injury, or loss of life.

⚠ DANGER

CARBON MONOXIDE HAZARD

This appliance can produce carbon monoxide which has no odor.

Using it in an enclosed space can kill you.

Never use this appliance in an enclosed space such as a camper, tent, car or home.

Safety Alert Key:

- ***DANGER!*** *Indicates a hazardous situation which, if not avoided will result in death or serious injury.*
- ***WARNING!*** *Indicates a hazardous situation which, if not avoided could result in death or serious injury.*
- ***CAUTION!*** *Indicates a hazardous situation which, if not avoided, could result in minor or moderate injury.*
- ***NOTICE:*** *Used to address practices not related to personal injury.*

Table of Contents

Installation Standard Work Checklist 3

1 Product Specific and Important Safety Information

A. Appliance Certification 4
B. BTU Specifications 4
C. High Altitude Installations 4
D. Non-Combustible Materials Specification. 4
E. Combustible Materials Specification 4
F. Electrical Codes 4
G. Fuel 4
H. California 4
I. Requirements for the Commonwealth of Massachusetts. . 5

2 Getting Started

A. Design and Installation Considerations 6
B. Tools and Supplies Needed 6
C. Inspect Appliance and Components. 7
D. Appliance Location for Outdoor Living Space 7

3 Applaince Framing Dimensions and Clearances

A. Appliance Dimension/Weights Diagrams 8
B. Framing Dimensions 9
C. Clearance to Combustibles 10
D. Vent Terminal Clearances 11
E. Hearth Extension/Floor Protection 12
F. Installations 12
G. Moisture Resistance. 12
H. Water Drainage 13

4 Appliance Preparation

A. Securing and Leveling Appliance 14
B. Flashing 14

5 Electrical Information

A. Wiring Requirements 15
B. Intellifire Pilot Ignition System Wiring 15
C. Wiring the Junction Box 15
D. Electrical Service and Repair 15
E. Wall Switch Control 16
F. Wiring Diagram. 17

6 Gas Information

A. Valve Access 18
B. Gas Pressure 18
C. Gas Connection 19
D. Fuel Conversion 19
E. High Altitude Installations 19

7 Finishing

A. Facing Material. 20
B. Mantel and Wall Projections. 20
C.Decorative Fronts. 21
D. Good Faith Wall Surface/TV Guidelines. 21

8 Appliance Setup

A. Remove the Shipping Materials 23
B. Clean the Appliance 23
C. Installing Fiber Refractory (Optional) 23
D. Optional Accessories 23
E. Verify Pilot Shield 24
F. Install Lava Rock Media 24

9 Reference Materials

► A. Accessories 25

➔ = Contains updated information.

ATTENTION INSTALLER:
Follow this Standard Work Checklist

This standard work checklist is to be used by the installer in conjunction with, not instead of, the instructions contained in this installation manual.

Customer: _____
Lot/Address: _____
_____

Model (circle one): **ODCOUG-36NR**
ODCOUG-36TS
ODCOUG-42NR
ODCOUG-42TS

Date Installed: _____
Location of Fireplace: _____
Installer: _____
Dealer/Distributor Phone # _____
Serial #: _____

WARNING! Risk of Fire or Explosion! *Failure to install appliance according to these instructions could lead to a fire or explosion.*

		YES	IF NO, WHY?
Appliance Install Section 3 & 4 (Pg. 8-14)			
Verified that the enclosure is sealed.	☐		
Verified clearances to combustibles.	☐		
Fireplace is leveled and secured.	☐		
Electrical Section 5 (Pg. 15-17)			
Unswitched power (110-120 VAC) provided to the appliance.	☐		
Switch wires properly installed.	☐		
Gas Section 6 (Pg. 18-19)			
Proper appliance for fuel type.	☐		
Was a conversion performed?	☐		
Leak check performed and inlet pressure verified.	☐		
Finishing Section 7 (Pg. 20-22)			
Combustible materials not installed in non-combustible areas.	☐		
Verified all clearances meet installation manuals requirements.	☐		
Mantels and wall projections comply with installation manual requirements.	☐		
Appliance Setup Section 8 (Pg. 23)			
All packaging and protective materials removed (inside & outside of appliance).	☐		
Media installed correctly.	☐		
Optional Mesh front properly installed.	☐		
Manual bag and all of its contents are removed from inside/under the appliance and given to party responsible for use and operation.	☐		
Started appliance and verified no gas leaks exist.	☐		

Hearth & Home Technologies recommends the following:

- Photographing the installation and copying this checklist for your file.
- That this checklist remain visible at all times on the appliance until the installation is complete.

Comments: Further description of the issues, who is responsible (Installer/ Builder/ Other Trades, etc) and corrective action needed _____
_____
_____

Comments Communicated to party responsible _____ by _____on _____
(Builder / Gen. Contractor/) (Installer) (Date)

4150-982A 07/22

1 Product Specific and Important Safety Information

A. Appliance Certification

MODEL: **ODCOUG-36NR; ODCOUG-36TS**
ODCOUG-42NR; ODCOUG-42TS
LABORATORY: **Underwriters Laboratories, Inc. (UL)**
TYPE: **Outdoor Decorative Gas Appliances**
STANDARD: **ANSI Z21.97-2017, CSA 2.41-2017**

This product is listed to ANSI standards for "Outdoor Decorative Gas Appliances" and "Gas Fired Appliances for Use at High Altitudes."

NOTICE: *This installation must conform with local codes. In the absence of local codes you must comply with the National Fuel Gas Code, ANSI Z223.1-latest edition in the U.S.A. and the CAN/CGA B149 Installation Codes in Canada.*

B. BTU Specifications

Model	Gas Type	Max Input BTU	Orifice Size	Burner Air Shutter
ODCOUG-36NR/TS ODCOUG-42NR/TS	Natural	55,000	#25 (.1495 in.)	1/16" Open
	Propane	53,000	#44 (.086 in.)	Fully Open

C. High Altitude Installations

NOTICE: *If the heating value of the gas has been reduced, these rules do not apply. Check with your local gas utility or authorities having jurisdiction.*

When installing above 2000 feet elevation:

- In the USA: Reduce input rate 4% for each 1000 feet above 2000 feet.
- In CANADA: Input ratings are certified without a reduction of input rate for elevations up to 4500 feet (1370 m)above sea level. Please consult provincial and/or local authorities having jurisdiction for installations at elevations above 4500 feet (1370 m).

Check with your local gas utility to determine proper orifice size.

D. Noncombustible Materials Specification

Material which will not ignite and burn. Such materials are those consisting entirely of steel, iron, brick, tile, concrete, slate, glass or plasters, or any combination thereof.

Materials that are reported as passing **ASTM E 136, Standard Test Method for Behavior of Materials in a Vertical Tube Furnace at 750 ºC** shall be considered non-combustible materials.

E. Combustible Materials Specification

Materials made of or surfaced with wood, compressed paper, plant fibers, plastics, or other material that can ignite and burn, whether flame proofed or not, or plastered or unplastered shall be considered combustible materials.

F. Electrical Codes

NOTICE: *This appliance must be electrically wired and grounded in accordance with local codes or, in the absence of local codes, with* **National Electric Code ANSI/NFPA 70-latest edition** *or the* **Canadian Electric Code CSA C22.1.**

- A 110-120 VAC circuit for this product must be protected with ground-fault circuit-interrupter protection, in compliance with the applicable electrical codes.

G. Fuel

This appliance must not be used to burn solid fuel.

When an appliance is connected to a fixed piping system, the installation must conform with local codes, or in the absence of local codes with the ***National Fuel Gas Code, ANSI Z223.1/NFPA 54, or International Fuel Gas Code.***

H. California

⚠ WARNING: This product and the fuels used to operate this product (liquid propane or natural gas), and the products of combustion of such fuels, can expose you to chemicals including benzene, which is known to the State of California to cause cancer and reproductive harm. For more information go to: www.P65Warnings.ca.gov.

Note: The following requirements reference various Massachusetts and national codes not contained in this document.

I. Requirements for the Commonwealth of Massachusetts

For all side wall horizontally vented gas fueled equipment installed in every dwelling, building or structure used in whole or in part for residential purposes, including those owned or operated by the Commonwealth and where the side wall exhaust vent termination is less than seven (7) feet above finished grade in the area of the venting, including but not limited to decks and porches, the following requirements shall be satisfied:

Installation of Carbon Monoxide Detectors

At the time of installation of the side wall horizontal vented gas fueled equipment, the installing plumber or gas fitter shall observe that a hard wired carbon monoxide detector with an alarm and battery back-up is installed on the floor level where the gas equipment is to be installed. In addition, the installing plumber or gas fitter shall observe that a battery operated or hard wired carbon monoxide detector with an alarm is installed on each additional level of the dwelling, building or structure served by the side wall horizontal vented gas fueled equipment. It shall be the responsibility of the property owner to secure the services of qualified licensed professionals for the installation of hard wired carbon monoxide detectors.

In the event that the side wall horizontally vented gas fueled equipment is installed in a crawl space or an attic, the hard wired carbon monoxide detector with alarm and battery back-up may be installed on the next adjacent floor level.
In the event that the requirements of this subdivision can not be met at the time of completion of installation, the owner shall have a period of thirty (30) days to comply with the above requirements; provided, however, that during said thirty (30) day period, a battery operated carbon monoxide detector with an alarm shall be installed.

Approved Carbon Monoxide Detectors

Each carbon monoxide detector as required in accordance with the above provisions shall comply with NFPA 720 and be ANSI/UL 2034 listed and IAS certified.

Signage

A metal or plastic identification plate shall be permanently mounted to the exterior of the building at a minimum height of eight (8) feet above grade directly in line with the exhaust vent terminal for the horizontally vented gas fueled heating appliance or equipment. The sign shall read, in print size no less than one-half (1/2) in. in size, **"GAS VENT DIRECTLY BELOW. KEEP CLEAR OF ALL OBSTRUCTIONS".**

Inspection

The state or local gas inspector of the side wall horizontally vented gas fueled equipment shall not approve the installation unless, upon inspection, the inspector observes carbon monoxide detectors and signage installed in accordance with the provisions of 248 CMR 5.08(2)(a)1 through 4.

Exemptions

The following equipment is exempt from 248 CMR 5.08(2)(a)1 through 4:

- The equipment listed in Chapter 10 entitled "Equipment Not Required To Be Vented" in the most current edition of NFPA 54 as adopted by the Board; and
- Product Approved side wall horizontally vented gas fueled equipment installed in a room or structure separate from the dwelling, building or structure used in whole or in part for residential purposes.

MANUFACTURER REQUIREMENTS

Gas Equipment Venting System Provided

When the manufacturer of Product Approved side wall horizontally vented gas equipment provides a venting system design or venting system components with the equipment, the instructions provided by the manufacturer for installation of the equipment and the venting system shall include:

- Detailed instructions for the installation of the venting system design or the venting system components; and
- A complete parts list for the venting system design or venting system.

Gas Equipment Venting System NOT Provided

When the manufacturer of a Product Approved side wall horizontally vented gas fueled equipment does not provide the parts for venting the flue gases, but identifies "special venting systems", the following requirements shall be satisfied by the manufacturer:

- The referenced "special venting system" instructions shall be included with the appliance or equipment installation instructions; and
- The "special venting systems" shall be Product Approved by the Board, and the instructions for that system shall include a parts list and detailed installation instructions.

A copy of all installation instructions for all Product Approved side wall horizontally vented gas fueled equipment, all venting instructions, all parts lists for venting instructions, and/or all venting design instructions shall remain with the appliance or equipment at the completion of the installation.

See Gas Connection section for additional Commonwealth of Massachusetts requirements.

2 Getting Started

A. Design and Installation Considerations

The Courtyard series gas appliance is designed for outdoor use and may be installed as a stand alone unit or built into a wall.

Note: The Courtyard appliance does NOT require a vent pipe.Appliance is designed for exhaust to vent out the front.

Outdoor spaces - For the purpose of these instructions, an appliance is considered to be outdoors if installed with shelter no more inclusive than:

1. With walls on all sides, but no overhead cover
2. Within a partial enclosure which includes an overhead cover and no more than two side walls. These side walls may be parallel, as in a breezeway, or at right angles to each other; or
3. Within a partial enclosure which includes an overhead cover and three sidewalls, as long as 30% or more of the horizontal periphery of the enclosure is permanently open. For an example, see Figure 2.1.

Note: Screen may be used on the open sides of the shelter, 14x18 and 16x18 screen mesh is approved for use. DO NOT use solar screen or no-see-um screen.

Install on wood, composite or noncombustible continuous flat surface, extending full width and depth of the appliance to prevent damage.

Refer to Section 3 for clearances.

Installation MUST comply with local, regional, state and national codes and regulations. Consult the authorities having jurisdiction over restrictions, installation inspection and permits.

Before installing, determine the following:

- Where the appliance is to be installed.
  - Clearance to side walls
  - Location of indoor appliance terminations, air inlets, gas meters, etc.
  - Doors
  - Location of the fireplace to a door that swings open to ensure it does not interfere with the fireplace when opened.
  - Windows
  - Walkways
  - Wires
  - Possibility of flooding or running water.
- Gas supply piping requirements.
- Electrical wiring requirements.
- Framing and finishing details.
- Prevailing Wind.

Installation and service of this appliance should be performed by qualified personnel. Hearth & Home Technologies recommends HHT Factory Trained or NFI certified professionals.

hearthED FACTORY TRAINING Fuel Your Fire

NFI NATIONAL FIREPLACE INSTITUTE® A CERTIFICATION AGENCY

Improper installation, adjustment, alteration, service or maintenance can cause injury or property damage. For assistance or additional information, consult a qualified service technician, service agency or your dealer.

B. Tools and Supplies Needed

Before beginning the installation be sure that the following tools and building supplies are available.

Tape measure	Framing material
Pliers	Hammer
Phillips screwdriver	Manometer
Gloves	Framing square
Voltmeter	Electric drill and bits (1/4 in.)
Plumb line	Safety glasses
Level	Reciprocating saw
3/4 in. wrench	Crescent wrench
7/8 in. wrench	1/4 in. nut driver
7/16 in. wrench	Pipe sealant

Flat blade screwdriver

Non-corrosive leak check solution

1/2 - 3/4 in. length, #6 or #8 Self-drilling screws

Caulking material (300ºF minimum continuous exposure rating)

C. Inspect Appliance and Components

- Carefully remove the appliance and components from the packaging.
- Remove wall control which is packaged separately.
- Remove protective coating from stainless steel.
- Report any damage in shipment to your dealer.
- **Read all of the instructions before starting the installation. Follow these instructions carefully during the installation to ensure maximum safety and benefit.**

WARNING! Risk of Fire or Explosion! *Damaged parts could impair safe operation.* ***DO NOT*** *install damaged, incomplete or substitute components.*

Hearth & Home Technologies disclaims any responsibility for, and the warranty will be voided by, the following actions:

- Installation and use of any damaged appliance.
- Modification of the appliance.
- Installation other than as instructed by Hearth & Home Technologies.
- Improper positioning of the media.
- Installation and/or use of any component part not approved by Hearth & Home Technologies.

Any such action may cause a fire hazard.

WARNING! Risk of Fire, Explosion or Electric Shock! ***DO NOT*** *use this appliance if any part has been under water. Call a qualified service technician to inspect the appliance and to replace any part of the control system and/or gas control which has been under water.*

D. Appliance Location for Outdoor Living Space

How to Calculate the Minimum Opening Needed In an Outdoor Living Space

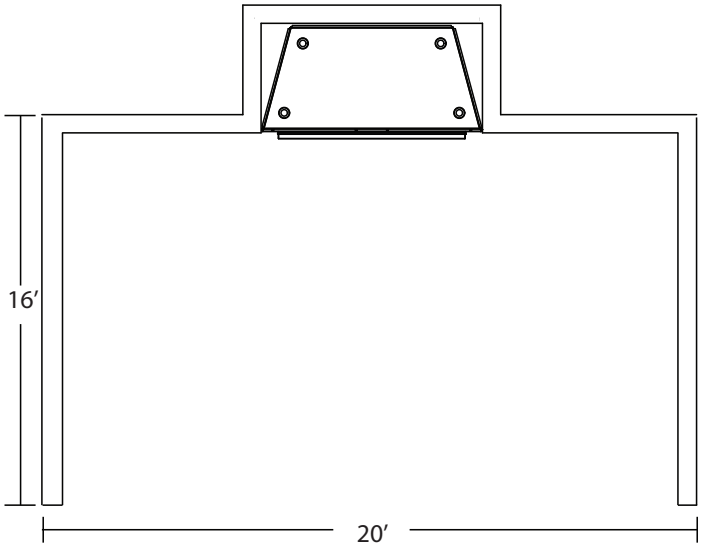

30% (or .30) of the outdoor living space periphery needs to be open.

1. Add lengths of the outside living space.
   16′+20′+16′+20′=72′
2. Divide the open area length by the total outdoor living space.
   20/72=**.28**

.28 is less than the .30 required and therefore this installation would not be approved.

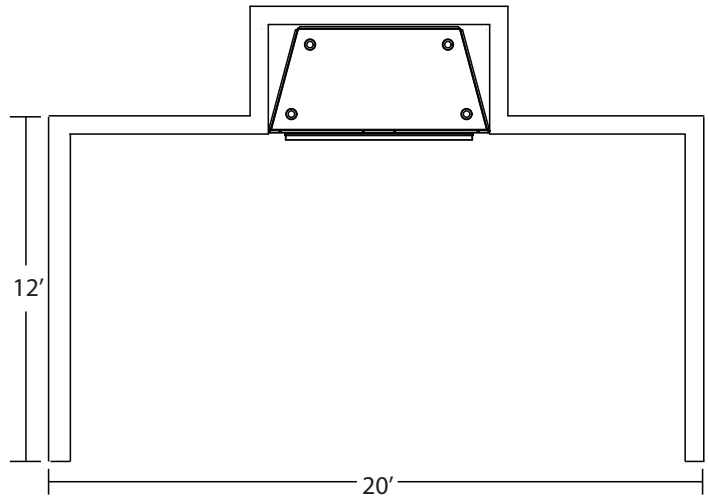

1. Add lengths of the outside living space.
   12′+20′+12′+20′=64′
2. Divide the open area length by the total outdoor living space.
   20/64=**.31**

.31 is greater than the .30 required and therefore this installation would be approved.

Figure 2.1 Appliance Locations

3 Appliance Framing Dimensions and Clearances

A. Appliance Dimension/Weights Diagrams

Dimensions are actual appliance dimensions. Use for reference only. For framing dimensions and clearances refer to page 9.

Appliance Weights

Model	Pounds
ODCOUG-36NR	90
ODCOUG-36TS	170
ODCOUG-42NR	95
ODCOUG-42TS	190

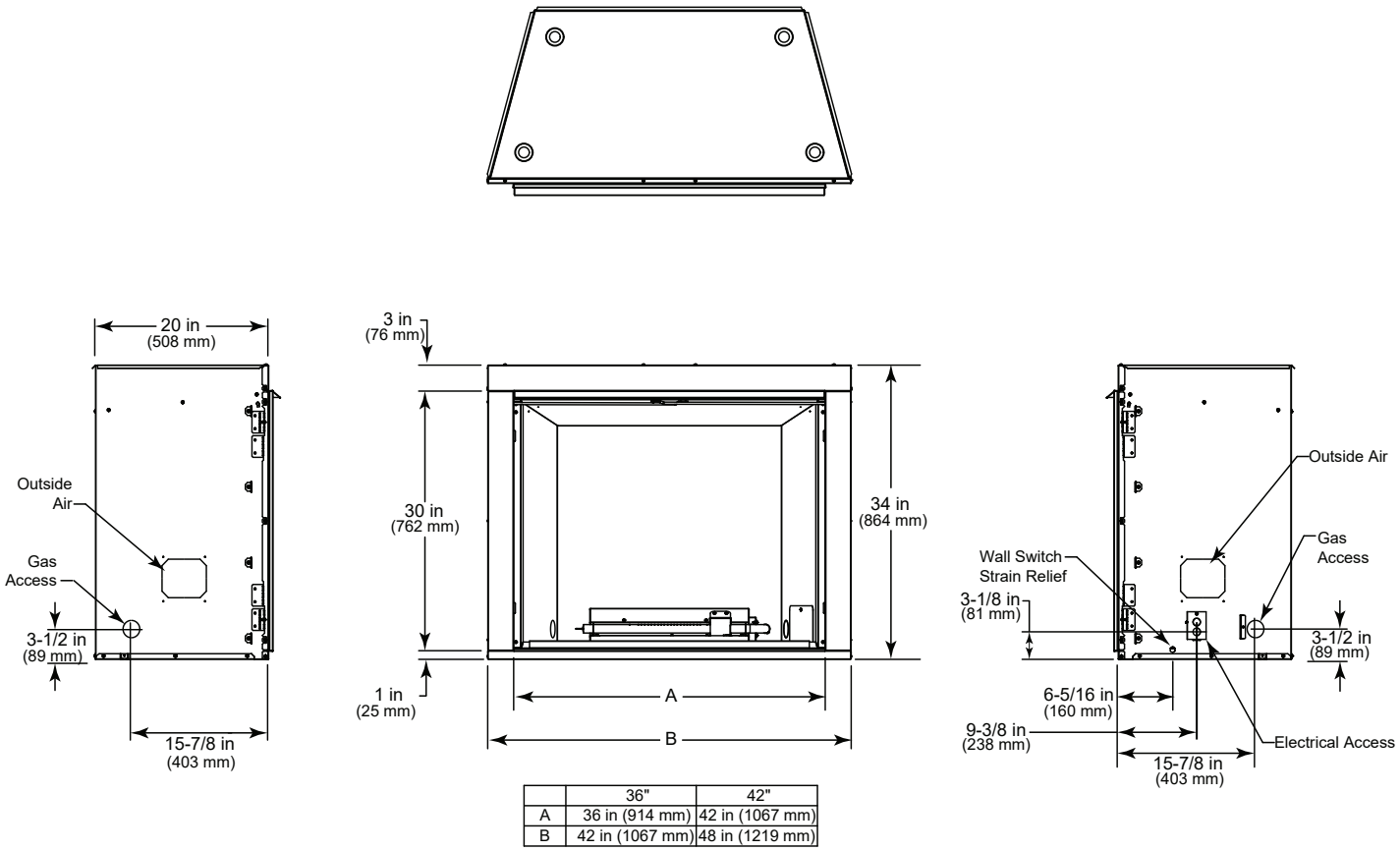

	36"	42"
A	36 in (914 mm)	42 in (1067 mm)
B	42 in (1067 mm)	48 in (1219 mm)

Figure 3.1 Appliance Dimensions

B. Framing Dimensions

WARNING! Risk of Fire or burns! *Provide adequate clearance around air openings and for service access. Due to high temperatures, the appliance should be located out of traffic and away from furniture and draperies.*

NOTICE: *Illustrations reflect typical illustrations and are FOR DESIGN PURPOSES ONLY. Illustrations/diagrams are not drawn to scale. Actual installation may vary due to individual design preference.*

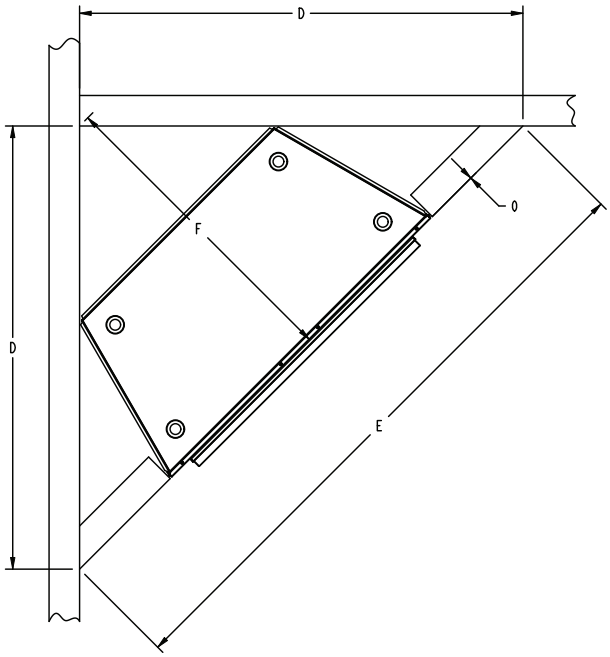

Note: Flash the perimeter of the appliance, corners and the appliance face in a manner consistent with regional practices as required to prevent water penetration around the appliance or manage water that may penetrate the appliance. See Section 3.F for more information regarding wall and enclosure construction.

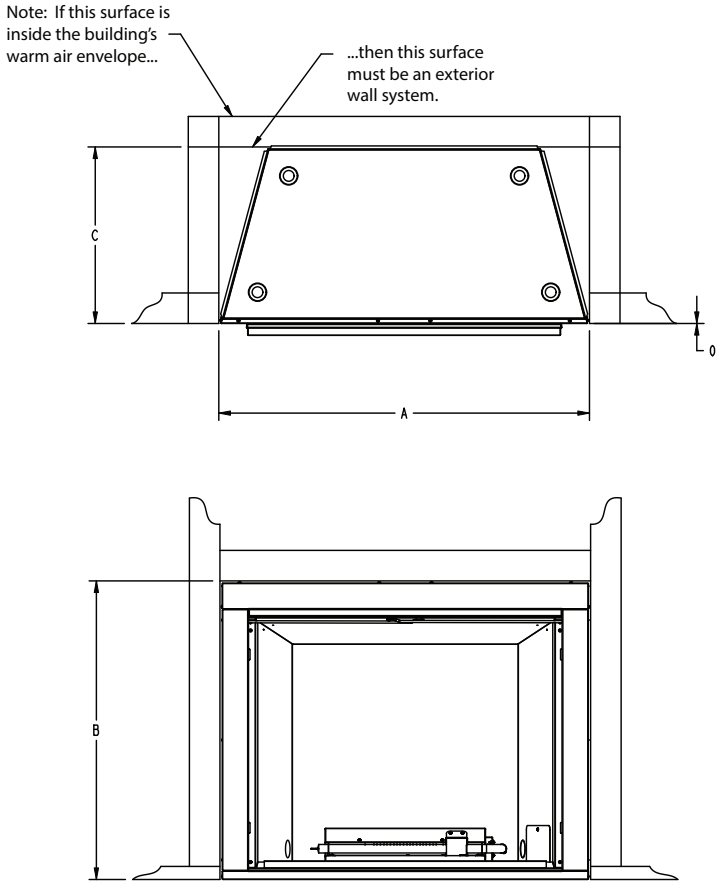

MODEL	A	B	C	D	E	F
ODCOUG-36	42-1/2 in (1080 mm)	34-1/4 in (870 mm)	20-1/4 in (514 mm)	51 in (1295 mm)	72 in (1829 mm)	36 in (914 mm)
ODCOUG-42	48-1/2 in (1232 mm)	34-1/4 in (870 mm)	20-1/4 in (514 mm)	55-1/4 in (1403 mm)	78 in (1981 mm)	39 in (991 mm)

Figure 3.2 Framing Dimensions

C. Clearances to Combustibles

When selecting a location for the appliance it is important to consider the required clearances to walls (see Figure 3.3 and 3.4).

WARNING! Risk of Fire or Burns! *Provide adequate clearance around air openings and for service access. Due to high temperatures, the appliance should be located out of traffic and away from furniture and draperies.*

WARNING! Risk of Fire or Burns! The appliance is hot and wind may cause flames to reach out in front.

- Keep furniture, draperies and other combustibles away.
- Locate the appliance away from traffic areas.
- Clean up fallen leaves, branches and other combustible materials before using the appliance.
- See Figure 3.3 and 3.4 for required clearances.
- Install on wood, composite or noncombustible continuous flat surface, extending full width and depth of the appliance to prevent damage.

WARNING! Risk of Fire! *Maintain specified air space clearances to appliance:*

- Insulation and other materials must be secured to prevent accidental contact.
- The chase/enclosure must be properly blocked to prevent blown insulation or other combustibles from entering and making contact with the appliance.
- Failure to maintain airspace may cause overheating and a fire.

WARNING! Risk of Fire ! *Comply with all minimum clearances to combustibles as specified. Framing or finishing material closer than the minimums listed must be constructed entirely of non-combustible materials (i.e., steel studs, concrete board, etc)*

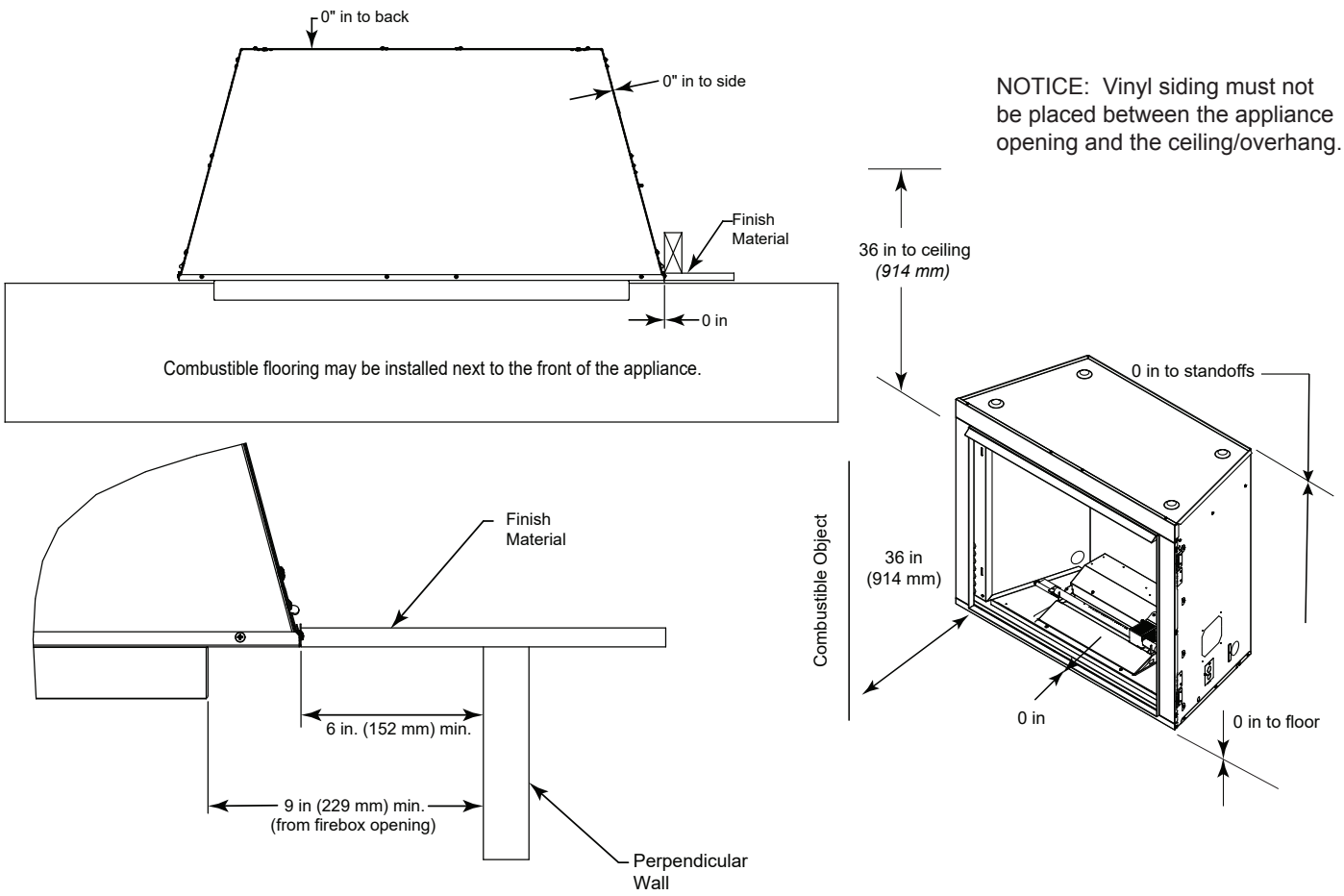

Figure 3.3 Clearance to Combustibles

D. Vent Terminal Clearances

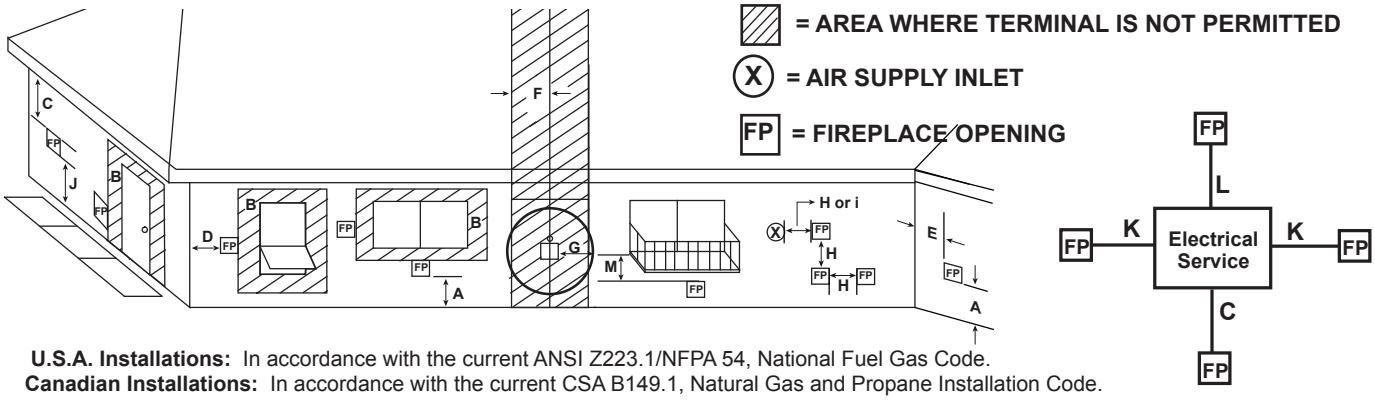

U.S.A. Installations: In accordance with the current ANSI Z223.1/NFPA 54, National Fuel Gas Code.
Canadian Installations: In accordance with the current CSA B149.1, Natural Gas and Propane Installation Code.

			U.S.A.	CANADA
A	Clearance above grade,veranda, porch, deck, or balcony		0 in. (0 cm)	0 in. (0 cm)
B	Clearance to window or door that may be opened, or to permanently closed window	Non-vinyl	12 in. (305 mm)	12 in. (305 mm)
		Vinyl	24 in. (610 mm)	24 in. (610 mm)
C	clearance below unventilated soffit		36 in. (914 mm)	36 in. (914 mm)
	clearance below ventilated soffit		36 in. (914 mm)	36 in. (914 mm)
	clearance below any vinyl soffits and electrical service		60 in. (1524 mm)	60 in. (1524 mm)
D	clearance to outside corner		9 in. (229 mm)	9 in. (229 mm)
E	clearance to inside corner	Non-vinyl siding (1 side)	9 in. (229 mm)	9 in. (229 mm)
		Non-Vinyl siding (Alcove)	12 in. (305 mm)	12 in. (305 mm)
		Vinyl siding & windows	48 in. (1219 mm)	48 in. (1219 mm)
F	not to be installed above a gas meter/regulator assembly within 3 feet horizontally from the center-line of the regulator		3 ft (914 mm)	3 ft (914 mm)
G	clearance to gas service regulator vent outlet		3 ft (914 mm)	3 ft (914 mm)
H	clearance to non-mechanical air supply inlet to building or the combustion air inlet to any other appliance termination (mechanical or non-mechanical)		12 in. (305 mm)	12 in. (305 mm)
I	clearance to a mechanical (powered) air supply inlet ***(All mechanical air intakes within 10 feet of a horizontal termination cap must be a minimum of 3 feet below termination.)		3 ft (914 mm)***	6 ft (1.7 mm)
J	For appliances installed facing or opening onto public property or property servic-ing more than one single family dwelling, such as driveways, sidewalks, etc. refer to local building codes/regulations for proper clearances.		Refer to local codes	Refer to local codes
K	clearance from sides of electrical service		24 in. (610 mm)	24 in. (610 mm)
	Location of the vent termination must not interfere with access to the electrical service.			
L	clearance above electrical service		12 in. (305 mm)	12 in. (305 mm)
	Location of the vent termination must not interfere with access to the electrical service.			
M	clearance under veranda, porch, deck, balcony or overhang (Permitted only if the area meets the requirements of an outdoor space as defined in section 2.A “Design and Installation Considerations”)		36 in. (914 mm)	36 in. (914 mm)
	vinyl or composite overhang		72 in. (1829 mm)	72 in. (1829 mm)

Figure 3.4 Minimum Clearances

E. Hearth Extension/Floor Protection

This appliance does not require a hearth extension.

F. Installations

Stand-Alone Installation

This appliance may be installed as a stand-alone appliance.

- Construct a stand-alone framing of combustible or non-combustible materials.
- Cement board or other non-combustible material can be applied directly to the face of the appliance.
- Air space clearances are not required for stand-alone construction with noncombustible materials.
- Tape and seal all joints and corners.
- Provide proper flashing and moisture management if installed on surfaces that may rot or otherwise be damaged by water. (See also Sections 3G and 3H.

Built-in Installation

When this appliance is installed into a wall, it is recommended that the wall be an exterior wall system.

- See framing measurements in Figure 3.2 and 3.3.
- Minimum air clearance at side and back of the appliance must be maintained. See Figure 3.3.
- The header must not be placed below the top of the top standoffs.
- Non-combustible wall sheathing material is required if covering the face of the appliance.

Flash the perimeter of the appliance, corners and the appliance face in a manner consistent with regional practices as required to prevent water penetration around the appliance.

- An optional Drain Pan is available.

See Section 3B and Figure 3.2 and 3.3 for more information regarding wall and enclosure construction.

G. Moisture Resistance

This outdoor appliance will shed moderate amounts of water, but is not waterproof. This appliance must be enclosed or covered with combustible and non-combustible finish material per framing dimension requirements and all joints sealed to prevent water infiltration.

A moisture membrane material may overlap and be taped onto the face of the appliance a maximum of 2 inches on the sides and top. See Figure 3.5.

The optional Drain Pan can be used to tie in a water membrane material with the front lower edge being the point where moisture exits the appliance. This must be taken into consideration when sealing the appliance. The lower edge should not be covered over, allowing any moisture that has accumulated to drain from the appliance.

Acceptable method for application of moisture membrane material shown. See Figures 3.5, 3.6 and 3.7.

The appliance will not perform as an exterior wall. Moisture penetration must be considered for construction that places the appliance in structure walls or on moisture sensitive surfaces.

When installed on exterior walls: Hearth & Home Technologies recommends that the chase be constructed outside the structure's weather envelope. Where the platform meets the wall, use a flashing detail similar to that required for attached decks. Chase platforms, including hearths should slope away from the structure at 1/8 in. to 1/4 in. per foot. The appliance can be shimmed level.

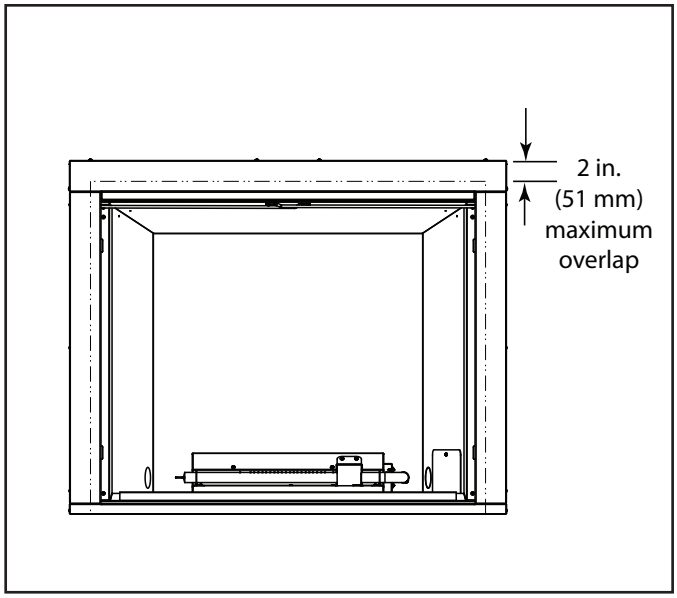

Figure 3.5 Membrane Overlap

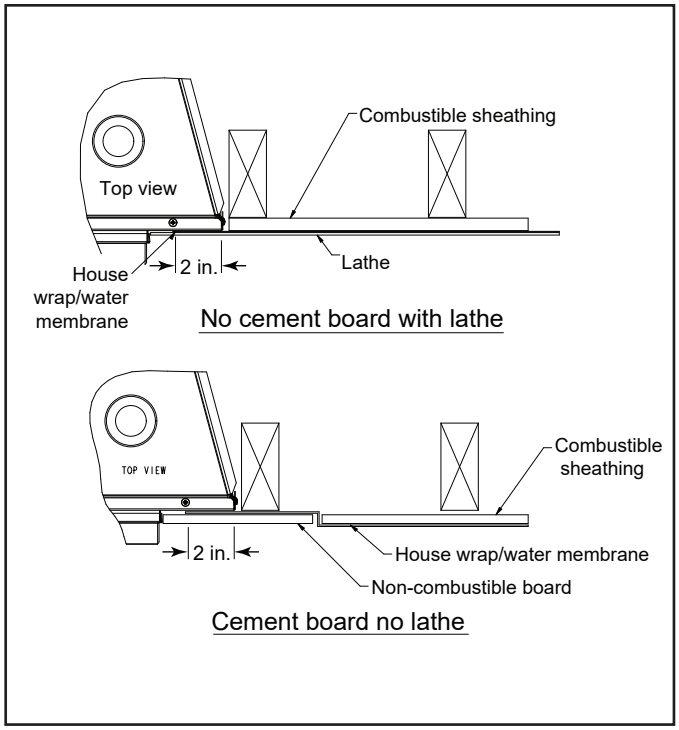

Figure 3.6 Moisture Membrane

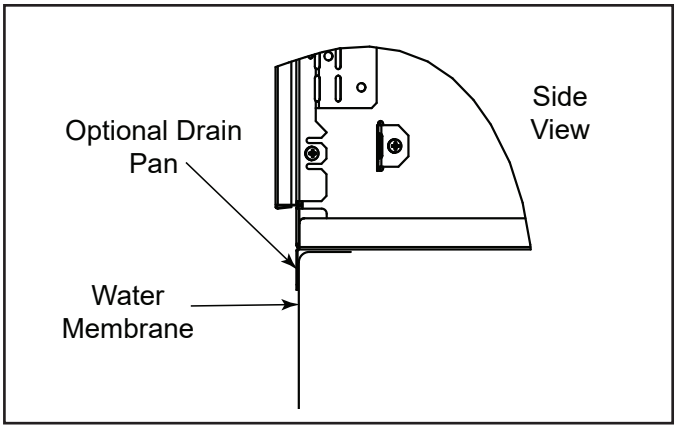

Figure 3.7 Side View of Drainage

H. Water Drainage

This appliance is designed to operate outdoors experiencing rain and other sources of moisture that will enter the firebox. The appliance has built-in drain holes in the base which will allow moisture to pass through the bottom of the enclosure. When constructing the enclosure, the builder must provide a means of draining water from under the appliance and out of the structure. This can be achieved by properly positioned drain holes, slots or other means to allow water to exit at the lowest grade of the structure. Choosing the location of the appliance is also important so that an area that may experience excessive water flow or standing water is avoided. In some cases a drain pan is needed to ensure proper drainage. This can be constructed from a corrosion resistant metal, or suitable material for outdoor use with a water resistant membrane. A slope of 1/4” per foot toward the drain ports of the structure is recommended. An optional drain pan is available for purchase.

4 Appliance Preparation

A. Securing and Leveling Appliance

CAUTION! Risk of Cuts, Abrasions or Flying Debris. *Wear protective gloves and safety glasses during installation. Sheet metal edges are sharp.*

Position, level, and secure the appliance.

- Install on wood, composite or noncombustible continuous flat surface, extending full width and depth of the appliance to prevent damage.
- Level the appliance from side to side and front to back.
- Shim the appliance with noncombustible material, such as sheet metal, as necessary.
- Chase platforms, including hearths should slope away from the structure at 1/8 in. to 1/4 in. per foot.
- Nailing tabs must be moved from shipping position to installation position and secured to framing. Bend the two nailing tabs out on each side. See Figure 4.1.

Note: Nailing tabs are design and positioned to allow the face of the appliance to either be installed flush with the framing materials or extend approximately 1/2 inch beyond framing materials. This allows the face of the appliance to be covered with non-combustible finishing materials, or combustible sheathing to be brought up to the sides of the appliance. See Figure 4.2.

B. Flashing

- Flash the appliance in a manner consistent with regional practices to prevent water penetration around the appliance. Due to elevated temperatures across the top of the appliance, metal flashing and high temperature sealant must be used. Adhesive polymeric flashing materials may melt.
- For brick, stone, stucco and similar construction, weep screeds should be installed per regional codes.
- See Section 3 and Figures 3.2 and 3.3 for more information regarding wall and enclosure construction required to prevent moisture penetration into the structure. The appliance will shed moderate amounts of water but is not waterproof. See Figures 3.5, 3.6, and 3.7.

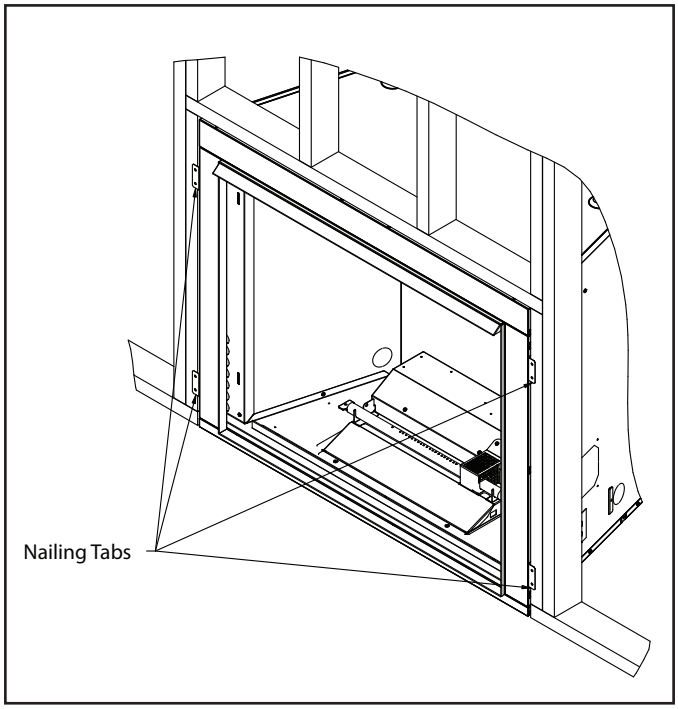

Figure 4.1 Positioning and Securing Nailing Tab

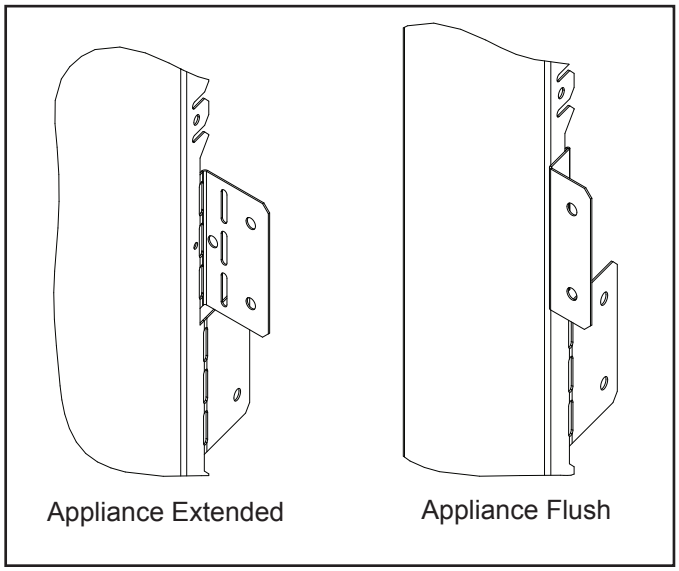

Figure 4.2 Nailing Tab Orientation

5 Electrical Information

A. Wiring Requirements

Note: The Courtyard appliance **MUST** be connected to a GFCI (Ground Fault Circuit Interrupt) protected circuit breaker.

WARNING! Risk of Shock or Explosion! DO NOT *wire 110-120 VAC to the valve or to the appliance wall switch. Incorrect wiring will damage controls.*

NOTICE: *This appliance must be electrically wired and grounded in accordance with local codes or, in the absence of local codes, with* **National Electric Code ANSI/NFPA 70-latest edition** *or the* **Canadian Electric Code CSA C22.1.**

Total Electrial Requirements: 110-120Vac, 60Hz., less than 3 Amperes

- Wire the appliance junction box to unswitched 110-120 VAC. This is required for proper operation of the appliance.
- A 110-120 VAC circuit for this appliance must be protected with ground-fault circuit-interrupter protection in compliance with the applicable electrical codes.
- Low voltage and 110-120 VAC voltage cannot be shared within the same wall box.

B. IntelliFire Pilot Ignition System Wiring

WARNING! Risk of Shock or Explosion! DO NOT *wire IPI controlled appliance junction box to a switched circuit. Incorrect wiring will override IPI safety lockout.*

THIS APPLIANCE SUPPLIED STANDARD WITH:

- IntelliFire control valve (6V)
- Wall Switch Control - Operates unit On/Off
- Wall switch wire

C. Wiring the Junction Box

Junction box wiring on this appliance can be done from either inside or outside of the appliance. However, for ease of installation, it is recommended that the junction box be wired from outside of the appliance.

If the junction box is wired from OUTSIDE appliance:

- Remove the screw attaching the junction box cover to the outer shell. Pull junction box cover out to disengage it from the outer shell. See Figure 5.1.

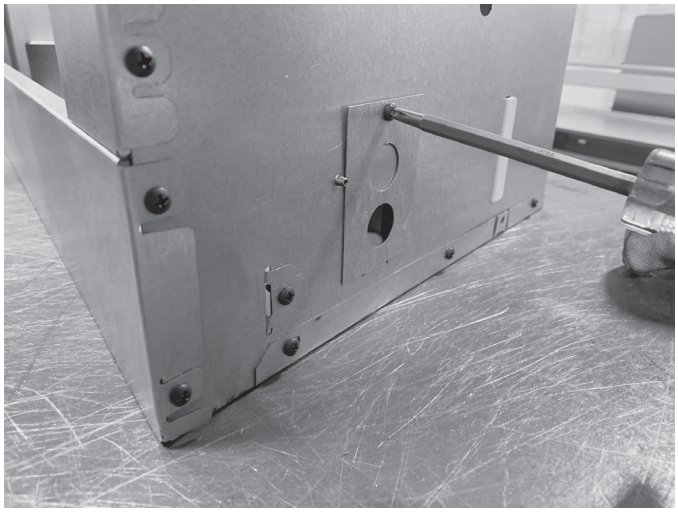

Figure 5.1 Junction Box Cover Removal

- Install electrical wires from outside the appliance through the hole in the cover plate and secure wires with a Romex connector.
- Make all necessary wire connections to the junction box and reattach the cover plate to firebox outer shell. See Figure 5.2.

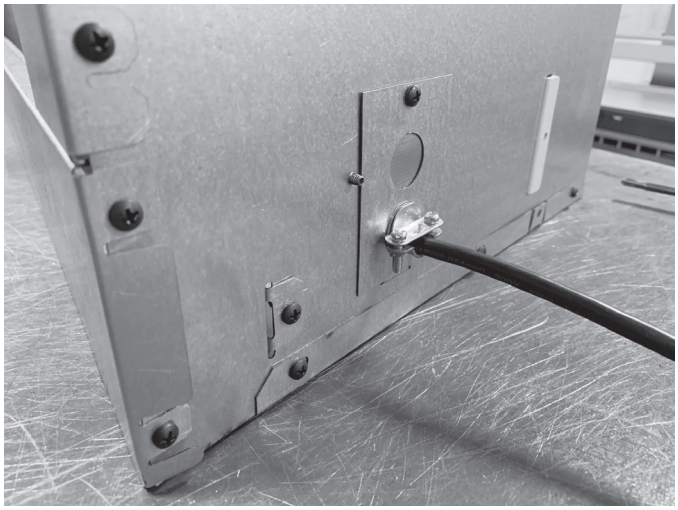

Figure 5.2 Reattaching Junction Box Cover

D. Electrical Service and Repair

WARNING! Risk of Shock! *Label all wires prior to disconnection when servicing controls. Wiring errors could cause improper and dangerous operation. Verify proper operation after servicing.*

WARNING! Risk of Shock! *Replace damaged wire with type 105º C rated wire. Wire must have high temperature insulation.*

E. Wall Switch Control

The Courtyard series outdoor gas appliance is supplied with a Wall Switch Control. See Figure 5.3 .

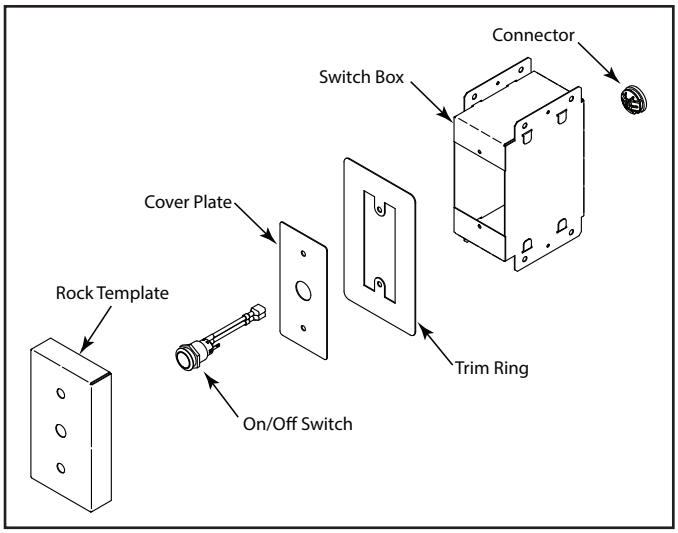

Figure 5.3 Wall Switch Control Kit

Using the nailing tabs, mount control in the desired location, within 14 feet of the appliance. See Figure 5.4.

Note: Wall Switch Control can be located on either the left or right side of the appliance.

Note: If needed, additional wire length can be added.

A maximum length of 50' is allowed, using minimum 20 gauge 2 conductor wire.

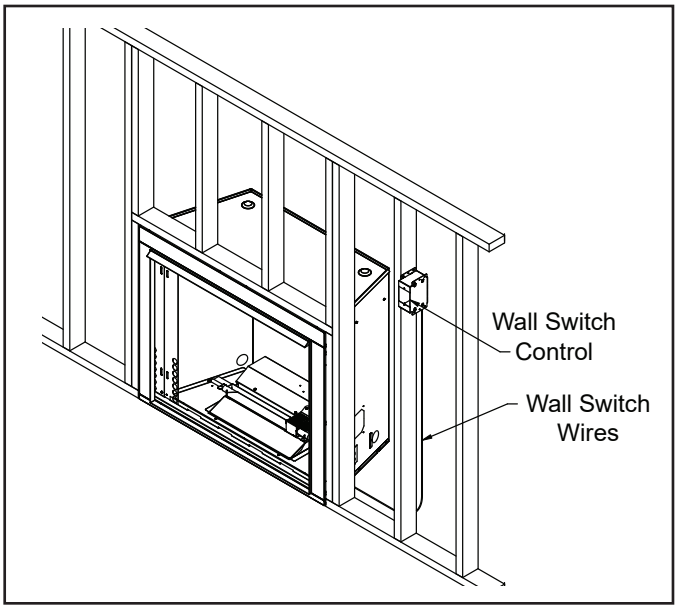

Figure 5.4 Wall Switch Mounting

F. Wiring Diagram

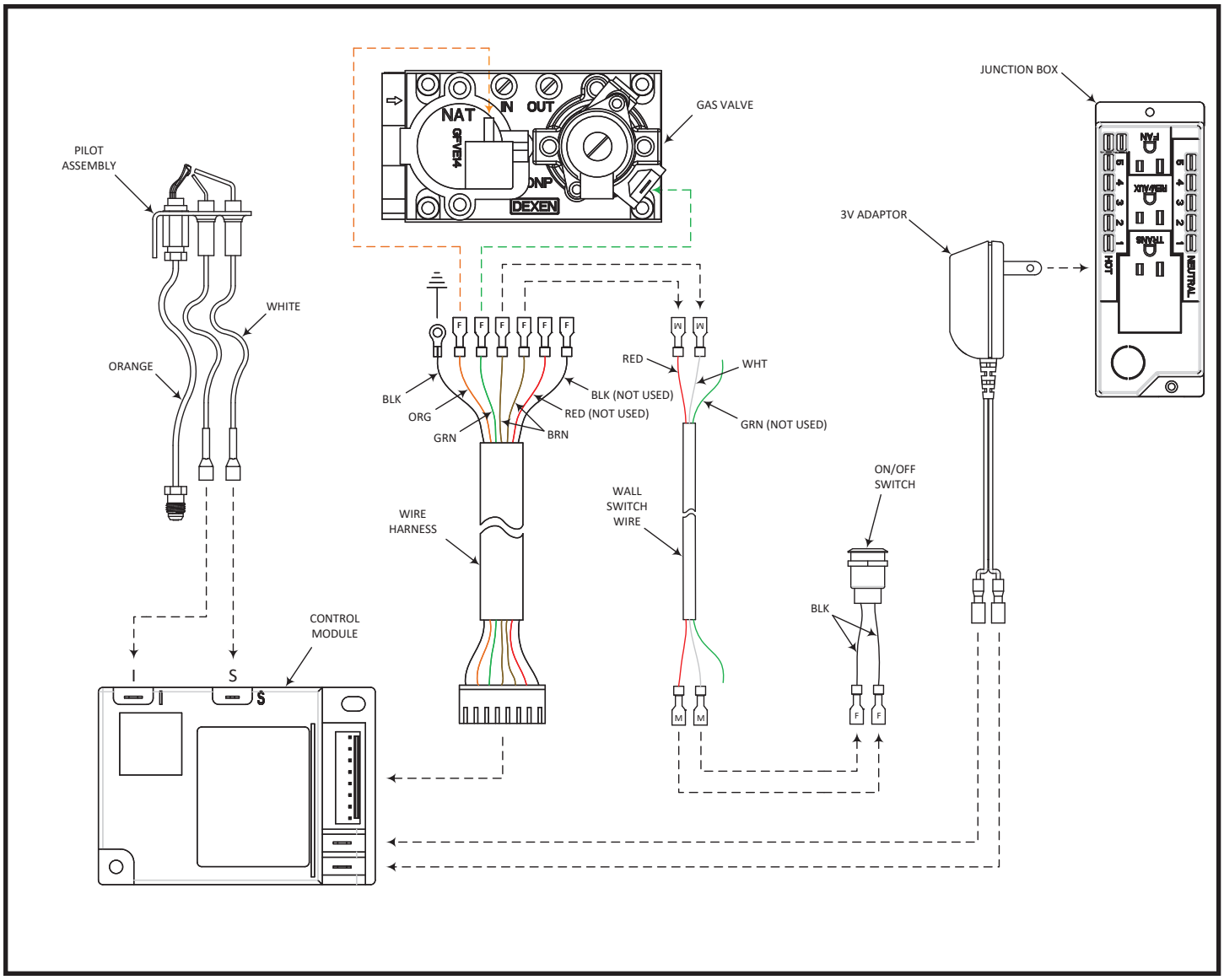

Figure 5.5

6 Gas Information

A. Valve Access

The valve and controls are located inside the burner assembly.
The control box and controls can be accessed by removing the Valve Access Cover shown in Figure 6.1.

- Make sure unit is off and cool.
- Remove media, logs and grate as needed.
- Remove valve access cover by lifting front edge and sliding forward.

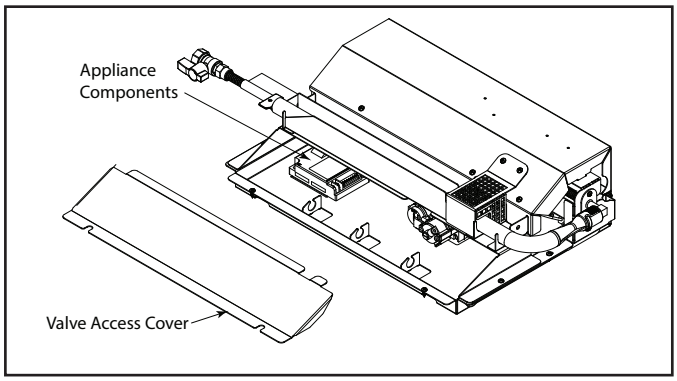

Figure 6.1 Burner Assembly

B. Gas Pressure

- Optimum appliance performance requires proper input pressures.
- Gas line sizing requirements will be determined in ANSI Z223.1 National Fuel Gas Code in the USA and CAN/CGA B149 in Canada.
- Pressure requirements are:

Gas Pressure	Natural Gas	Propane
Minimum inlet gas supply pressure for the purpose of input adjustment	5.0 in. w.c.	11.0 in. w.c.
Maximum inlet pressure	10.0 in. w.c.	13.0 in. w.c.
Manifold pressure	3.5 in. w.c.	10.0 in. w.c.

These pressures can be verified through the access panel as shown in Section 6.A Valve Access.

When an appliance is connected to a fixed piping system, the installation must conform with local codes, or in the absence of local codes with the ***National Fuel Gas Code, ANSI Z223.1/NFPA 54, or International Fuel Gas Code.***

⚠ WARNING

Fire Risk.

Explosion Hazard.

High pressure will damage valve. Low pressure could cause explosion.

- Disconnect gas supply piping BEFORE pressure testing gas line at test pressures above 1/2 psig.
- Close the manual shutoff valve BEFORE pressure testing gas line at test pressures equal to or less than 1/2 psig.
- Verify inlet pressures. Verify minimum pressures when other household gas appliances are operating.
- Install regulator upstream of valve if line pressure is greater than 1/2 psig.

Note: Have the gas supply line installed in accordance with local codes, if any. If not, follow ANSI 223.1 Installation should be done by a qualified installer approved and/or licensed as required by the locality. (In the commonwealth of Massachusetts, installation must be performed by a licensed plumber or gas fitter.)

Note: A listed (and Commonwealth of Massachusetts approved) 1/2 in. (13 mm) T-handle manual shut-off valve and flexible gas connector are connected to the 1/2 in. (13 mm) control valve inlet.

- **If substituting for these components, please consult local codes for compliance.**

Note: An individual manual shutoff valve (not supplied) is required when installing this appliance. The manual shutoff valve must be located in an easily accessible area, no more than 6 feet from the appliance.

C. Gas Connection

- Refer to Section 3.A for location of gas line access in appliance.
- The gap between supply piping and gas access hole may be caulked with caulk with a minimum of 300ºF continuous exposure rating or stuffed with non-combustible, unfaced insulation to help prevent rodents and insects from getting into the control area of the appliance.
- Ensure that gas line does not come in contact with outer wrap of the appliance. Follow local codes.
- Pipe incoming gas line into appliance firebox area.
- Connect incoming gas line to the 1/2 in. (13 mm) connection on manual shutoff valve.

WARNING! Risk of Fire or Explosion! *Support control when attaching pipe to prevent bending gas line.*

- A small amount of air will be in the gas supply lines.

Light the appliance. It will take a short time for air to purge from lines. When purging is complete the appliance will light and operate normally.

WARNING! Risk of Fire! DO NOT *change valve settings. This valve has been preset at the factory.*

WARNING! Risk of Fire, Explosion or Asphyxiation! *Check all fittings and connections with a non-corrosive commercially available leak-check solution.* ***DO NOT*** *use open flame. Fittings and connections could have loosened during shipping and handling.*

WARNING! Risk of Fire or Explosion! *Gas build-up during line purge could ignite.*

- *Purge should be performed by qualified service technician.*
- *Ensure adequate ventilation.*
- *Ensure there are no ignition sources such as sparks or open flames.*

D. Fuel Conversion

- Make sure the appliance is compatible with available gas types.
- The Courtyard series gas appliance is supplied from the factory for use with natural gas. If a Propane(LP) conversion is required, kit ODCOUG-LPK must be purchased in order to convert the unit for use with propane.
- Conversions must be made by a qualified service technician using Hearth & Home Technologies specified and approved parts.

E. High Altitude Installations

Notice: *If the heating value of the gas has been reduced, these rules do not apply. Check with your local gas utility or authorities having jurisdiction.*

When installing above 2000 feet elevation:

- In the USA: Reduce input rate 4% for each 1000 feet above 2000 feet.
- In Canada: Input ratings are certified without a reduction of input rate for elevations up to 4500 feet (1370m) above sea level. Please consult provincial and/or local authorities having jurisdiction for installations at elevations above 4500 feet (1370m.)

Check with your local gas utility to determine proper orifice size. See conversion kit (ODCOUG-LPK) for instructions on how to change main burner orifice.

7 Finishing

A. Facing Material

WARNING! Risk of Fire! *Metal front faces may be covered with non-combustible materials only.*

- Appliance metal front faces may be covered with non-combustible facing and/or finishing materials up to a maximum thickness of 4 inches.
- Facing and/or finishing materials must not interfere with air flow through the front of the appliance.
- Facing and/or finishing materials must never overhang into the appliance opening.
- See Figures 7.1 and 7.2 for combustible and non-combustible mantle and mantle leg clearance requirements.
- Maintain all listed clearances when applying combustible materials.
- Seal joints between the finished wall and appliance top and sides using a 300º F minimum sealant.

WARNING! Risk of Fire! DO NOT *apply combustible materials beyond the minimum clearances. Comply with all minimum clearances to combustibles as specified in this manual. Overlapping materials could ignite and may interfere with proper operation.*

NOTICE: *Surface temperatures around the appliance will become warm while the appliance is in operation. Ensure finishing materials used for all surfaces (floor, walls, mantels, etc.) will withstand temperatures up to 190ºF.*

B. Mantel and Wall Projections

WARNING! Risk of Fire! *Comply with all minimum clearances as specified.*

- Reducing non-combustible mantel and/or mantel leg clearances closer than those listed in this manual requires the use of non-combustible construction materials (eg: steel studs, concrete boards, etc.) to a minimum height of 12 inches (305 mm) above the listed framing height.

Note: Mantel Measurement is taken from top of the appliance opening, NOT the top of the unit.

Combustible/Noncombustible Mantels

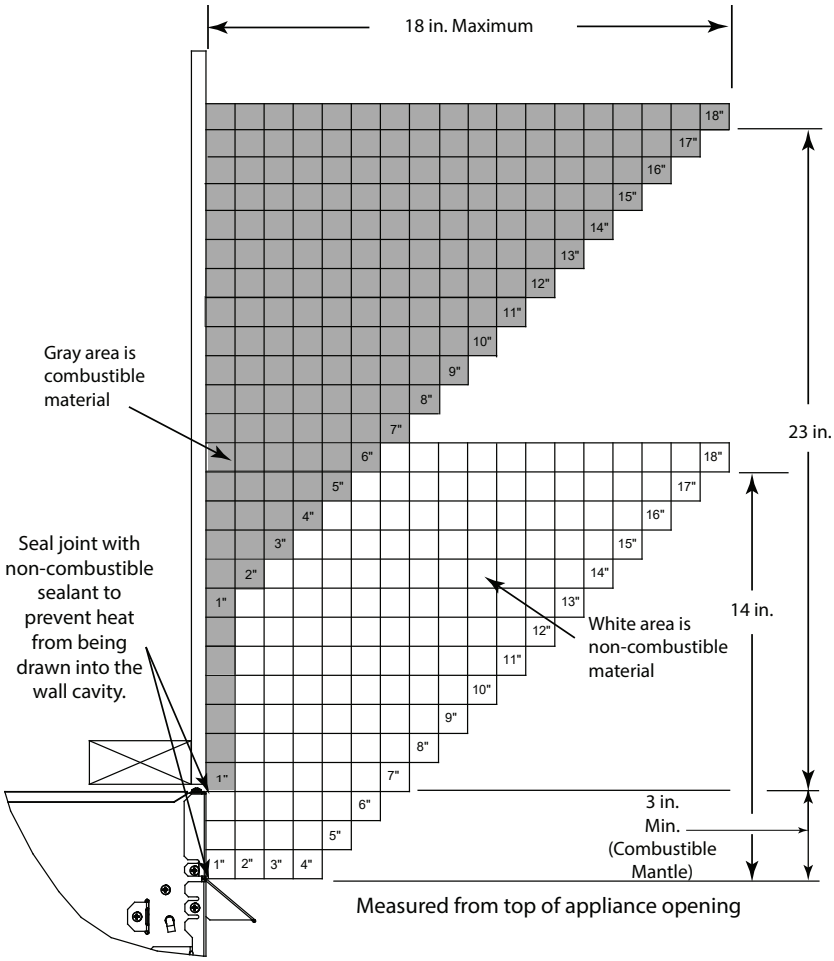

Note: Reducing clearances further requires non-combustible construction materials (eg: steel studs, durock, etc) to a height of 12 inches above the framing height.

Figure 7.1 Minimum Vertical and Maximum Horizontal Dimensions of Combustible and Noncombustible

Combustible or Non-Combustible Mantel Legs or Wall Projections

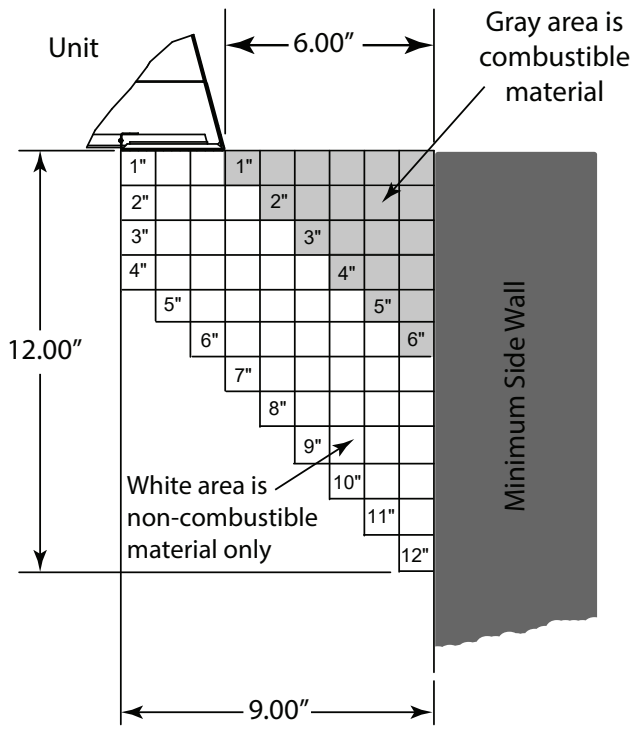

Figure 7.2 Combustible & Non-Combustible Mantel Leg or Wall Projections

C. Decorative Fronts

Only decorative fronts certified for use with this appliance model may be used. Contact your dealer for a list of decorative fronts that may be used.

D. Good Faith Wall Surface/TV Guidelines

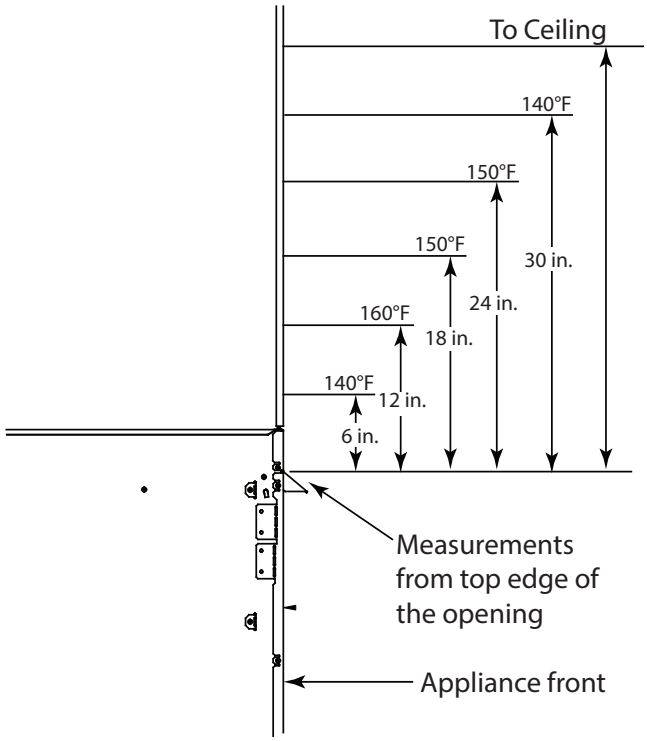

Figure 7.3 Good Faith Wall Surface Temperatures Above Appliance

Notice: *Temperatures listed above are taken with a temperature measuring probe as prescribed by the test standard used for appliance certification. Temperatures on walls or mantels taken with an infrared thermometer may yield increased temperatures of up to 30°F (17°C) or more depending on the thermometer settings and material characteristics being measured. Use appropriate finishing materials that are able to withstand these conditions. For additional finishing guidlines, see Section 7 in the appliance Installation Manual.*

Good Faith Guidelines for TV Installation's above a Typical Gas Appliance

Combustible Mantel	A
inch	20.00
mm	508
Non-Combustible Mantel	
inch	15.00
mm	381

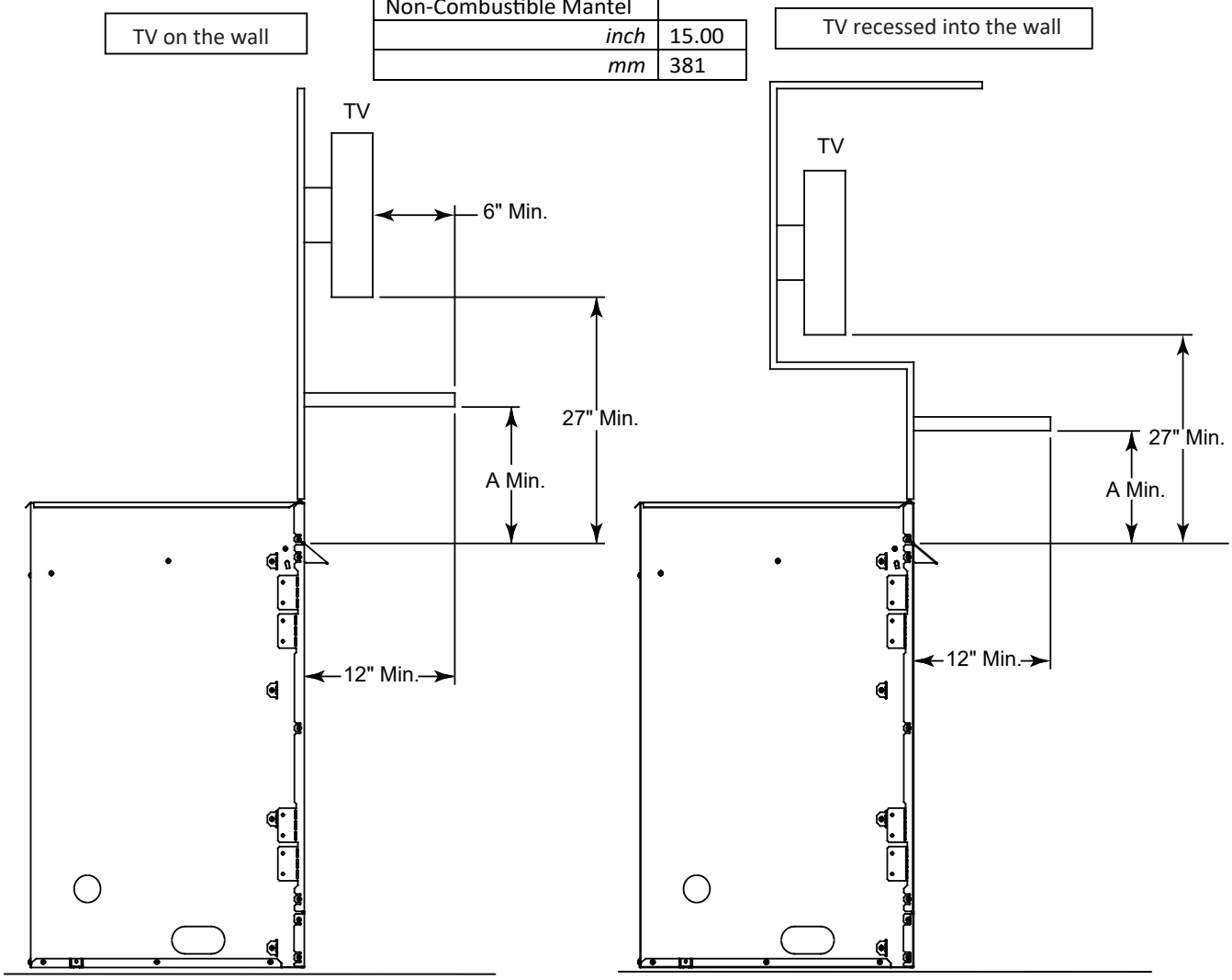

Notes:

1. These are good faith recommended clearances only and not a guarantee of compliance with all TV manufacturers' maximum allowable operating temperatures.
2. Since every installation has unique air flow characteristics and maximum allowable operating tempera tures can vary from manufacturer to manufacturer and from model to model, actual TV temperatures should be validated at the time of each installation. TVs should not be used in situations where the actual TV temperature exceeds the manufacturers' maximum allowable operating temperatures identified in the TV's technical specifications. Contact the TV's manufacturer directly if you cannot locate this information or have questions regarding the information.
3. Mantel height and depth must conform to mantel requirements specified in the installation manual.
4. "A" dimension taken from the top of the appliance opening.
5. Suggestions on how to further reduce TV temperatures:
   -Increase "A" and/or 27" minimum TV height dimensions.

Figure 7.4 Good Faith Clearances

8 Appliance Setup

A. Remove the Shipping Materials

Remove the plastic coating and shipping materials from the appliance.

WARNING! Risk of Fire! *Close the ball valve before installing the media template to prevent accidental lighting. Remove the media template before lighting the appliance.*

B. Clean the Appliance

Clean/vacuum any sawdust that may have accumulated inside the appliance.

Using a stainless steel cleaner, apply to a terry cloth and wipe appliance following the grain of the stainless. Do not spray cleaner directly into the appliance. Use caution while cleaning the mesh as the edges are sharp and may tear the cleaning cloth.

C. Installing Fiber Refractory (Optional)

1. Remove grate, log set and media, if installed.
2. Remove refractory, if installed, by removing brackets at the top and bottom of each side panel. See Figure 8.1. Tilt refractory top edge towards the center of the appliance and lift out. Repeat on other side.

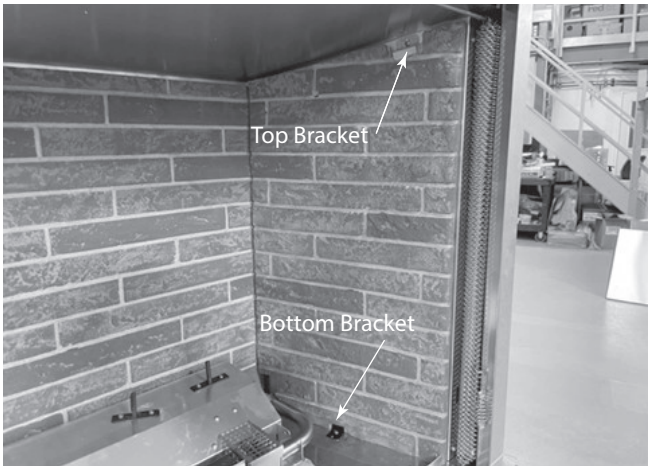

Figure 8.1

3. To remove rear refractory, it is necessary to remove the Burner Rear Cover. Remove (3) screws securing cover, lift cover to remove and set aside. See Figure 8.2.

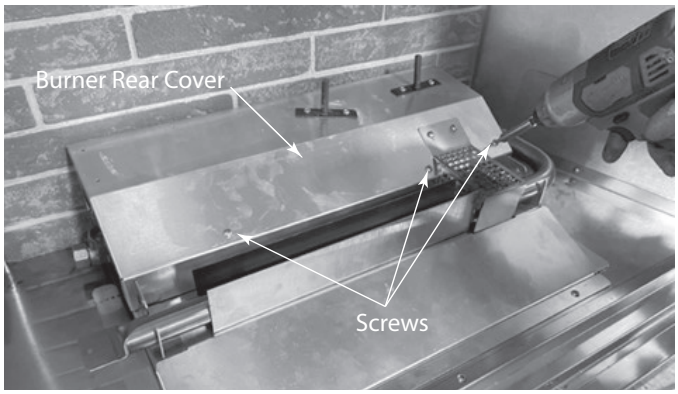

Figure 8.2

4. To remove rear refractory panel, tilt top edge towards the center of the appliance and lift out.
5. Use a shop vac or small brush to clean debris left from refractory panels to ensure a flat surface for the fiber refractory panels to sit upon.
6. Reverse steps 1-4 above to install new optional fiber refractory.

D. Optional Accessories

Install only approved accessories per instructions included with accessories. Contact your dealer for a list of approved accessories.

WARNING! Risk of Fire and Electric Shock! *Use ONLY Hearth & Home Technologies-approved optional accessories with this appliance. Using non-listed accessories could result in a safety hazard and will void the warranty.*

E. Verify Pilot Shield

Ensure proper placement of the pilot shield. See Figure 8.3. Shipping could cause it to become displaced.

F. Install Lava Rock Media

Be sure to spread Lava rock evenly over the hearth area including the hearth pan. Do not cover burner tube or pilot when using Lava rock.

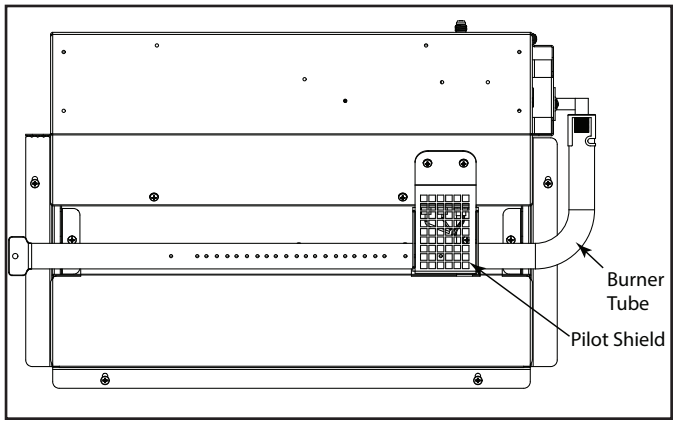

Figure 8.3 Pilot Shield Placement

9 Reference Materials

A. Accessories

Drain Pans

- ODGSDP-36 — 36” Drain Pan
- ODGSDP-42 — 42” Drain Pan
- ODGSDPFLT-36 — 36” Drain Pan, Flat
- ODGSDPFLT-42 — 42” Drain Pan, Flat

LP Conversion Kit

- ODCOUG-NGK — Natural Gas Conversion Kit for Courtyard Appliance
- ODCOUG-LPK — Propane Conversion Kit for Courtyard Appliance

Controls

- WWT — Wired Wall Timer Kit

Optional Door Screen

- ODCOUG-36SCN — Framed mesh screen with canopy 36 in.
- ODCOUG-42SCN — Framed mesh screen with canopy 42 in.

Log Sets: (for use with GR-ODCOUG)

- SDLOGS-ODCOUG — Standard definition log set 36 in. & 42 in.
- HDLOGS-ODCOUG — High definition log set 36 in. & 42 in.

Grate: (for use with Log Sets)

- GR-ODCOUG — Stainless steel grate with lava rock 36 in./42 in.

Optional Liner Kits:

- ODCOUG-36GTR — 36” Gray Traditional Refractory Fiber
- ODCOUG-36GHR — 36” Gray Herringbone Refractory Fiber
- ODCOUG-42GTR — 42” Gray Traditional Refractory Fiber
- ODCOUG-42GHR — 42” Gray Herringbone Refractory Fiber
- ODCOUG-36BTR — 36” Brown Traditional Refractory Fiber
- ODCOUG-36BHR — 36” Brown Herringbone Refractory Fiber
- ODCOUG-42BTR — 42” Brown Traditional Refractory Fiber
- ODCOUG-42BHR — 42” Brown Herringbone Refractory Fiber
- ODCOUG-36SSL — 36” Stainless Steel Liner
- ODCOUG-42SSL — 42” Stainless Steel Liner
-

Miscellaneous:

- ODCOUG-VFP — Vent Free Plate

Printed in U.S.A. - Copyright 2014