PRORUN®

60V /// LITHIUM-ION

OPERATOR'S MANUAL

CHARGER

MODEL: PC16026
MODEL: PC26026

BATTERY

MODEL: PB160-25
MODEL: PB160-50
MODEL: PB160-100

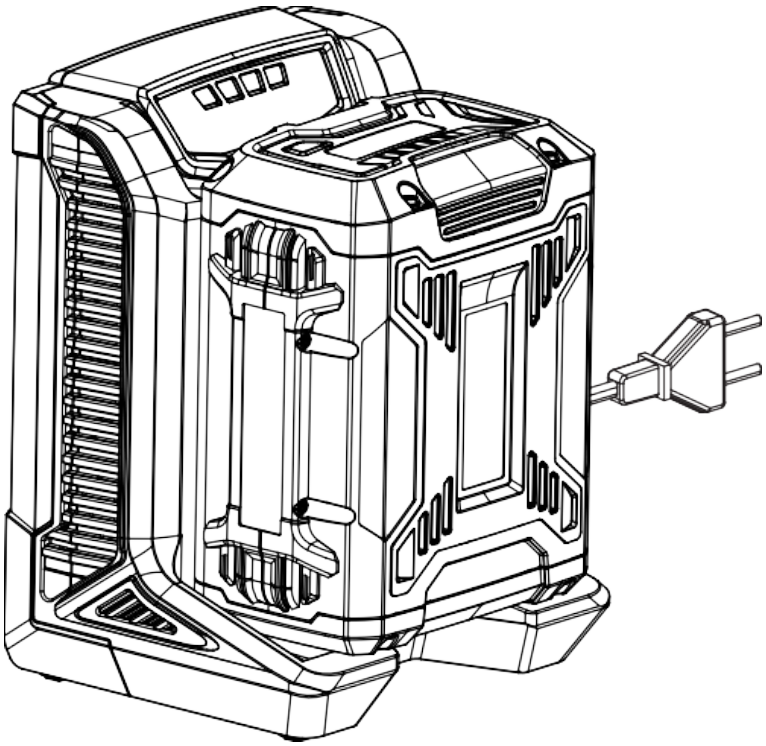

Everything PRORUN

Before using, read the instructions.

⚠ **IMPORTANT – READ CAREFULLY BEFORE USE.**

⚠ **IMPORTANT SAFETY INSTRUCTIONS – SAVE THESE INSTRUCTIONS**

WARNING: To reduce the risk of injury, the user must read and understand the User manual before using this product. Keep these instructions for future reference.

Please let us know what you think. To leave a comment and see our complete product line, Visit:

PRORUNTOOLS.COM ★★★★★

1-844-905-0882, info@proruntech.com

Version: A – Issue Date: 6/4/2025

KEY SYMBOLS FOR CHARGER

Symbol Description	Signification
	**Warning! Incorrect or careless use of a charger can turn it into a dangerous tool that can cause serious or even fatal injury. It is extremely important that you read and understand the contents of the operator's manual.**
	**Please read the operator's manual carefully and make sure you understand the instructions before using the machine.**
	**CLASS II EQUIPMENT**
	**FUNCTIONAL EARTHING EQUIPMENT (For PC26026)**
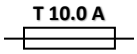	**T 10.0 A TIME-LAG MINIATURE FUSE-LINK (For PC26026)**
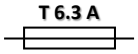	**T 6.3 A TIME-LAG MINIATURE FUSE-LINK (For PC16026)**
	**USE AND STORE BATTERY CHARGER ONLY INDOORS.**
	**Symbols on the product or its packaging indicate that this product cannot be handled as domestic waste. This product must be deposited at an appropriate recycling facility.**

KEY SYMBOLS FOR BATTERY

Symbol Description	Signification
	**Please read the operator 's manual carefully and make sure you understand the instructions before using the machine.**
	**Do not leave or store the battery outdoors in the rain or in wet conditions.**
	**Don't expose the battery to fire or incinerate it.**
	**Don't heat the battery above 100℃ (212 F).**

BATTERY AND BATTERY CHARGER

This section describes the battery and battery charger safety for your battery product.
Only use TOPSUN original batteries for TOPSUN products and only charge them in an original battery QC charger from TOPSUN. The batteries are software encrypted.

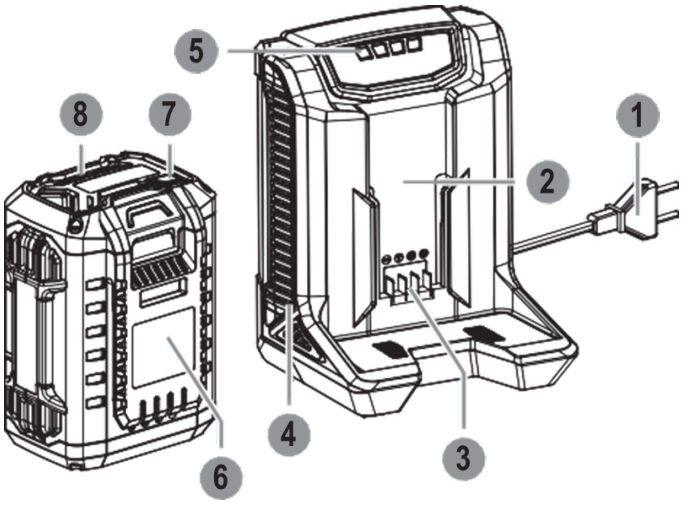

1. **Electric plug**
2. **Battery Charger**
3. **Electrical Terminal**
4. **Cooling slots**
5. **Charger LED light**
6. **Battery**
7. **Electric energy button**
8. **Electric energy LEG light**

IMPORTANT SAFETY INSTRUCTIONS

BATTERY CHARGER

- The battery chargers are only used for fast charging of TOPSUN replacement batteries.
- This manual contains important safety and operating instructions for battery charger.
- Before using battery charger, read all instructions and cautionary markings on battery charger, and product using battery.

⚠CAUTION! Charge only TOPSUN Li-on Batteries. Other types of batteries may burst causing personal injury and damage.

- If the shape of the plug does not fit the power outlet, use an attachment plug adapter of the proper configuration for the power outlet.

⚠WARNING! Minimize the risk of electric shock or short circuit as follows:

- Never insert any object into the charger's cooling slots. Do not try to dismantle the battery charger. Never connect the charger terminals to metal objects as this can short circuit the battery charger. Use approved and intact wall sockets.

⚠WARNING! This machine produces an electromagnetic field during operation.

- This field may under some circumstances interfere with active or passive medical implants. To reduce the risk of serious or fatal injury, we recommend people with medical implants consult their physician and the medical implant manufacturer before operating this machine. Do not use products when a thunderstorm is approaching.

- Regularly check that the battery charger connection wire is intact and that there are no cracks in it.
- Never carry the battery charger using the cord and never pull out the plug by pulling the cord.
- Keep all cords and extension cords away from water, oil and sharp edges. Make sure the cord is not pinched in doors, fences or the like. Otherwise, it can cause the object to become live.
- Never clean the battery or the battery charger with water.
- Never allow the children to use the battery charger.
- When charging, the charger must be placed in a well-ventilated area and under a roof to keep out moisture.

⚠WARNING! Do not charge non-rechargeable batteries in the battery charger or use them in the machine.

⚠WARNING! Do not use the battery charger close to corrosive or flammable mate- rials. Do not cover the battery charger. Pull out the plug to the battery charger in the event of smoke or fire. Risk of fire.

Use the battery charger only when the surrounding temperature is between 0 °C (32 °F) and 40 °C (104 °F). Use the charger in an environment which is well ventilated, dry and free from dust.

Do not use:

- A faulty or damaged battery charger
- The battery in the battery charger outdoors.

Do not charge:

- Or never use faulty, damaged or deformed battery.
- The battery in the rain or in wet conditions.
- The battery in direct sunlight.

BATTERY

- Do not dismantle, open or shred secondary batteries. Keep batteries out of the reach of children.
- Battery usage by children should be supervised. Especially keep small batteries out of reach of small children.
- Do not expose batteries to heat or fire. Avoid storage in direct sunlight.
- Do not short-circuit a battery. Do not store batteries haphazardly in a box or drawer where they may short-circuit each other or be short-circuited by other metal objects.
- Do not remove a battery from its original packaging until required for use. Do not subject batteries to mechanical shock.
- In the event of a cell leaking, do not allow the liquid to encounter the skin or eyes. If contact has been made, wash the affected area with copious amounts of water and seek medical advice.
- Do not use any charger other than that specifically provided for use with the equipment. Do not use any battery which is not designed for use with the equipment.
- Always purchase the battery recommended by the device manufacturer for the equipment.
- Keep batteries clean and dry.
- Wipe the battery terminals with a clean dry cloth if they become dirty.

- Secondary batteries need to be charged before each use. Always use the correct charger and refer to the manufacturer's instructions or equipment manual for proper charging instructions.
- Do not leave a battery on prolonged charge when not in use.
- After extended periods of storage, it may be necessary to charge and discharge the batteries several times to obtain maximum performance.
- Retain the original product literature for future reference.
- Use the battery only in the application for which it was intended.
- When possible, remove the battery from the equipment when not in use. Dispose of properly.

OPERATION

⚠WARNING! Risk of electric shock and short circuiting. Use approved and intact wall sockets. Make sure that the cable is not damaged. Replace the cable if it appears to be damaged in any way.

Connect the battery charger

- Connect the electric plug (1) to the voltage and frequency specified on the rating plate.
- Put the electric plug in an earthed socket-outlet. The charger LED light (5) lit green in the begin 5s, then the light will turn off if there is no battery in the charger (2).

Connect the battery to the battery charger

- The battery (6) must be charged before using it the first time. The battery is only 30% charged when delivered.

NOTE! During charging monitoring the charging process and never leave the battery in the charger when charging is complete.

- Push the battery into the battery charger.



The charger LED light always flashes green when the battery is charging.



The charger LED light always light green if the battery is fully charged.



The battery will not be charged if the battery temperature is deviated. In that case the charger LED light flashes red until the battery cools down or heats to normal temperature.



The battery will never be charged if the battery is damaged. In that case the charger LED light always lit red.

- The electric energy is divided into 5 grades, if you want to check the electric energy of battery, you need to press down the electric energy button (7).
- When the battery is fully-charged the battery charger will stop charging (switch to stand by), and the charger LED will light green always until the battery is removed from the charger.

There are no restrictions on how long a battery can remain in the charger. Recommendation is to remove the battery from the battery charger when the battery is fully charged.
- Pull out the electric plug. Never jerk the power supply cable to disconnect it from the wall socket.

MAINTENANCE

- Make sure the battery and battery charger are clean and that the terminals on the battery and the battery are always clean and dry before the battery is placed in the battery charger.
- Keep the battery guide tracks clean. Clean plastic parts with a clean and dry cloth.

TRANSPORT AND STORAGE

- Store the equipment in a lockable area so that it is out of reach of children and unauthorized people.
- Store the battery and the battery charger in a dry, moisture-free and frost-free space. Store the battery where the temperature is between -20 °C (-4 °F) and 75°C (167 °F) and never in direct sunlight.
- Store the battery charger only in an enclosed and dry space. Be sure to store the battery separate from the battery charger.

LED Display	Possible Faults	Possible Action
Charger LED flashing red.	The battery is ok, but temperature deviation.	Charge the battery in surroundings where temperatures are between 0 °C (32 °F) and 40 °C (1 °F). Wait the battery cool down.
Charger LED always light red.	Battery is damaged. Charger is damaged.	Contact your service agent.

Disposal of the battery, battery charger and machine

- Symbols on the product or its packaging indicate that this product cannot be handled as domestic waste. It must instead be submitted to an appropriate recycling station for the recovery of electrical and electronic equipment.
- By ensuring that this product is taken care of correctly, you can help to counteract the potential negative impact on the environment and people that can otherwise result through the incorrect waste management of this product. For more detailed information about recycling this product, contact your municipality, your domestic waste service or the shop from where you purchased the product.

PRORUN

TECHNICAL DATA

Battery Charger		Rechargeable Li-ion Battery			
Model	PC26026	Model	PB160-25	PB160-50	PB160-100
Input Voltage, V	AC 220-240	Cells (pcs)	15	30	60
Frequency, Hz	50	Rated Capacity	2.5 Ah	5.0 Ah	10.0 Ah
Output Voltage, V	62.4	Voltage	Nominal	54 VDC	
Output current, A	10.5		Max	60 VDC	
Power, W	710	Electric Energy	135 Wh	270 Wh	540 Wh

Battery Charger		Rechargeable Li-ion Battery			
Model	PC16026	Model		PB160-25	PB160-50
Input Voltage, V	AC 220-240	Cells (pcs)		15	30
Frequency, Hz	50	Rated Capacity		2.5 Ah	5.0 Ah
Output Voltage, V	62.4	Voltage	Nominal	54 VDC	
Output current, A	2.6		Max	60 VDC	
Power, W	191	Electric Energy		135 Wh	270 Wh

PRORUN regularly improves our products, and you may find slight differences between your machine and the descriptions contained within this operator's manual. Modifications can be made to the machine without notice and without the obligation to update the manual, providing that the essential safety and functional characteristics remain unaltered. Contact PRORUN Customer Service with any questions and for current specifications.

PRORUN / TOPSUN USA
10130 Perimeter Parkway
Suite 140
Charlotte, NC 28216
Customer Service: (844) 905-0882
Email: info@proruntech.com
Website: www.proruntools.com

Zhejiang Zhongjian Technology Co., Ltd
Web: www.topsunpower.cc
E-mail: sales@topsunpower.cc
ADD: No.155 Mingyuan North AVE, Economic Development Zone,
Yongkang, Zhejiang, 321300, P.R. CHINA
Made in China