NordicTrack®

nordictrack.com

COMMERCIAL LE

Model No. NTL13125.0
Serial No. _____

Write the serial number in the space above for reference.

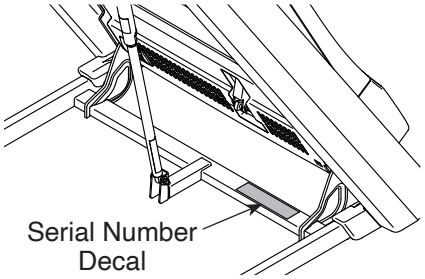

MEMBER CARE

For service at any time, go to my.iFIT.com or scan the QR code below. PLEASE DO NOT CONTACT THE STORE.

⚠CAUTION

Read all precautions and instructions in this manual before using this equipment. Keep this manual for future reference.

USER'S MANUAL

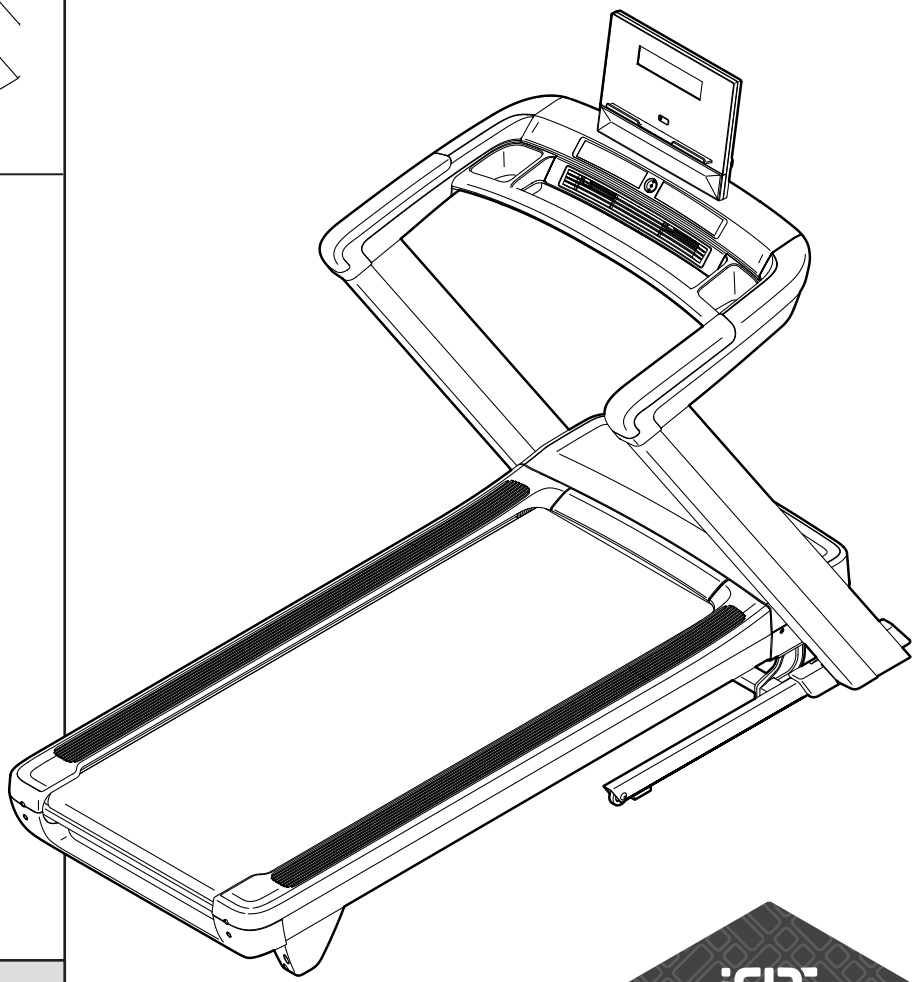



TABLE OF CONTENTS

WARNING DECAL PLACEMENT 2
IMPORTANT PRECAUTIONS 3
BEFORE YOU BEGIN 5
PART IDENTIFICATION CHART 6
ASSEMBLY 7
HOW TO PLUG IN THE POWER CORD 16
HOW TO USE THE TREADMILL 17
FCC INFORMATION 26
HOW TO FOLD AND MOVE THE TREADMILL 27
MAINTENANCE AND TROUBLESHOOTING 28
EXERCISE GUIDELINES 31
PART LIST 34
EXPLODED DRAWING 36
ORDERING REPLACEMENT PARTS . . . . . Back Cover
LIMITED WARRANTY . . . . . Back Cover

WARNING DECAL PLACEMENT

This drawing shows the locations of the warning decals. **If a decal is missing or illegible, see the front cover of this manual and request a free replacement decal. Apply the decal in the location shown.** Note: The decals may not be shown at actual size.

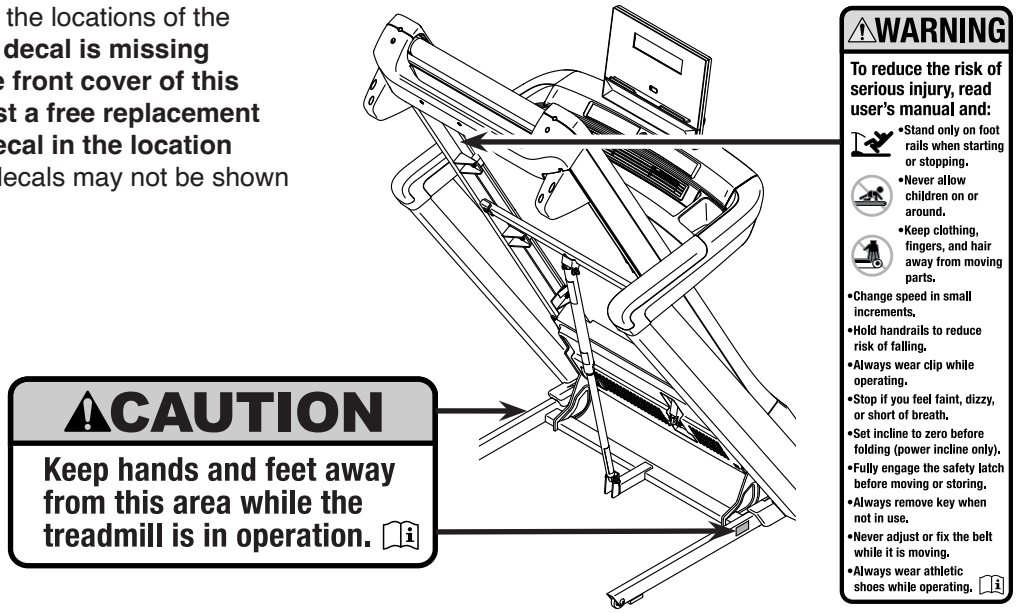

NORDICTRACK and IFIT are registered trademarks of iFIT Inc. App store is a trademark of Apple Inc., registered in the U.S. and other countries. Android and Google Play are trademarks of Google LLC. The Bluetooth® word mark and logos are registered trademarks of Bluetooth SIG, Inc. and are used under license. IOS is a trademark or registered trademark of Cisco in the U.S. and other countries and is used under license.

IMPORTANT PRECAUTIONS

⚠WARNING: To reduce the risk of burns, fire, electric shock, or injury to persons, read all important precautions and instructions in this manual and all warnings on your treadmill before using your treadmill. iFIT assumes no responsibility for personal injury or property damage sustained by or through the use of this product.

1. It is the responsibility of the owner to ensure that all users of the treadmill are adequately informed of all warnings and precautions.
2. Keep children under age 16 and pets away from the treadmill at all times.
3. Consult your health care provider before beginning any exercise program. This is especially important for persons over age 35 or persons with pre-existing health problems.
4. Consult your health care provider before beginning or continuing any exercise program during pregnancy. Use the treadmill only as authorized by your health care provider.
5. The treadmill is not intended for use by persons with reduced physical, sensory, or mental capabilities or lack of experience and knowledge, unless they have been given supervision or instruction concerning the use of the treadmill by someone responsible for their safety.
6. Use the treadmill only as described in this manual.
7. The treadmill is intended for home use only. Do not use the treadmill in any commercial, rental, or institutional setting.
8. Keep the treadmill indoors, away from moisture and dust. Do not put the treadmill in a garage or covered patio, or near water.
9. Place the treadmill on a level surface, with at least 8 ft. (2.4 m) of clearance behind it and 2 ft. (0.6 m) on each side. Do not place the treadmill on any surface that blocks air openings. To protect the floor or carpet from damage, place a mat under the treadmill.
10. Do not operate the treadmill where aerosol products are used or where oxygen is being administered.
11. The treadmill should be used only by persons weighing 400 lbs. (182 kg) or less.
12. Never allow more than one person on the treadmill at a time.
13. Wear appropriate exercise clothes while using the treadmill. Do not wear loose clothes that could become caught in the treadmill. Athletic support clothes are recommended for both men and women. Always wear athletic shoes. Never use the treadmill with bare feet, wearing only stockings, or in sandals.
14. Plug the power cord into a surge suppressor (not included), and plug the surge suppressor into an appropriate outlet (see page 16). To avoid overloading the circuit, do not plug other electrical devices, except for low-power devices such as cell phone chargers, into the surge suppressor or into an outlet on the same circuit.
15. Use only a surge suppressor that meets all of the specifications described on page 16. To purchase a surge suppressor, see your local NORDICTRACK dealer, see the front cover of this manual, or see your local electronics store.
16. Failure to use a properly functioning surge suppressor could result in damage to the control system of the treadmill. If the control system is damaged, the walking belt may slow, accelerate, or stop unexpectedly, which may result in a fall and serious injury.
17. Keep the power cord away from heated surfaces.
18. Never move the walking belt while the power is turned off. Do not operate the treadmill if the power cord or plug is damaged, or if the treadmill is not working properly. (See MAINTENANCE AND TROUBLESHOOTING on page 27 if the treadmill is not working properly.)

19. Read, understand, and test the emergency stop procedure before using the treadmill (see HOW TO TURN ON THE CONSOLE on page 18). Always wear the clip while using the treadmill.

20. Be careful when mounting and dismounting the treadmill. Always stand on the foot rails when starting or stopping the walking belt. Always hold the handrails while using the treadmill.

21. When a person is walking on the treadmill, the noise level of the treadmill will increase.

22. Keep fingers, hair, and clothing away from the moving walking belt.

23. The treadmill is capable of high speeds. Adjust the speed in small increments to avoid sudden jumps in speed.

24. Never leave the treadmill unattended while it is running. Always remove the key, press the power switch into the off position (see the drawing on page 5 for the location of the power switch), and unplug the power cord when the treadmill is not in use.

25. Do not attempt to move the treadmill until it is properly assembled. (See ASSEMBLY on page 7 and HOW TO FOLD AND MOVE THE TREADMILL on page 26.) You must be able to safely lift 45 lbs. (20 kg) to move the treadmill.

26. When folding or moving the treadmill, make sure that the storage latch is holding the frame securely in the storage position. Do not operate the treadmill while it is folded.

27. Do not change the incline of the treadmill by placing objects under the treadmill.

28. Never insert any object into any opening on the treadmill.

29. Inspect and properly tighten all parts each time the treadmill is used. Replace any worn parts immediately. Use only manufacturer-supplied parts.

30. **DANGER:** Always unplug the power cord immediately after use, before cleaning the treadmill, and before performing the maintenance and adjustment procedures described in this manual. Never remove the motor hood unless instructed to do so by an authorized service representative. Servicing other than the procedures in this manual should be performed by an authorized service representative only.

31. Over exercising may result in serious injury or death. If you feel faint, if you become short of breath, or if you experience pain while exercising, stop immediately and cool down.

SAVE THESE INSTRUCTIONS

BEFORE YOU BEGIN

Thank you for selecting the new NORDICTRACK® COMMERCIAL LE treadmill. The COMMERCIAL LE treadmill provides a large selection of features designed to make your workouts at home more effective and enjoyable.

For your benefit, read this manual carefully before you use the treadmill. If you have questions after reading this manual, please see the front cover of this manual. To help us assist you, note the product model number and serial number before contacting us (see the front cover of this manual).

Before reading further, please familiarize yourself with the parts that are labeled in the drawing below.

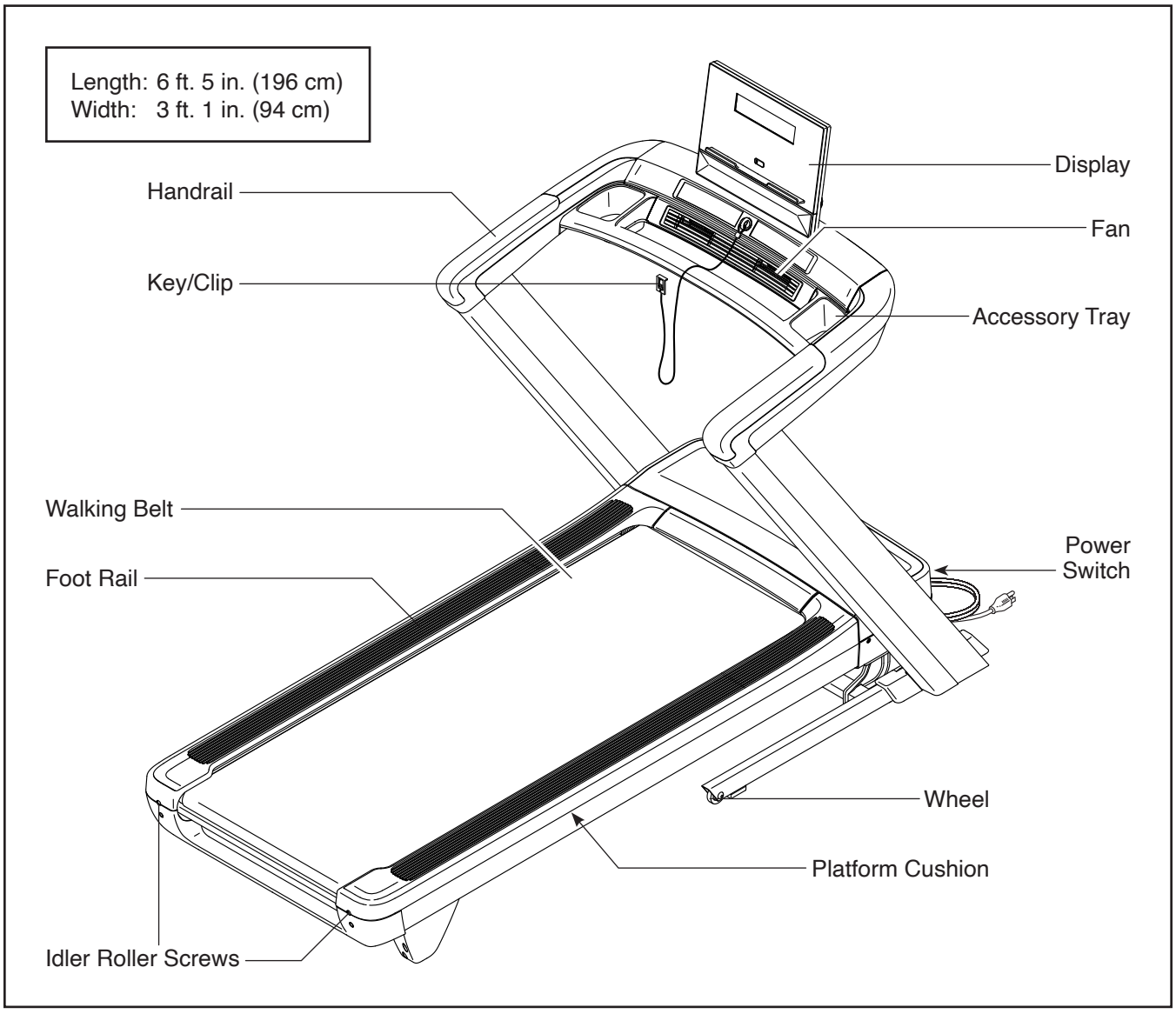

PART IDENTIFICATION CHART

Use the drawings below to identify small parts used for assembly. The number in parentheses below each part is the key number of the part, from the PART LIST near the end of this manual. The number after the key number is the quantity required for assembly. **Note: If a part is not in the hardware kit, check to see whether it is preattached. Extra parts may be included.**

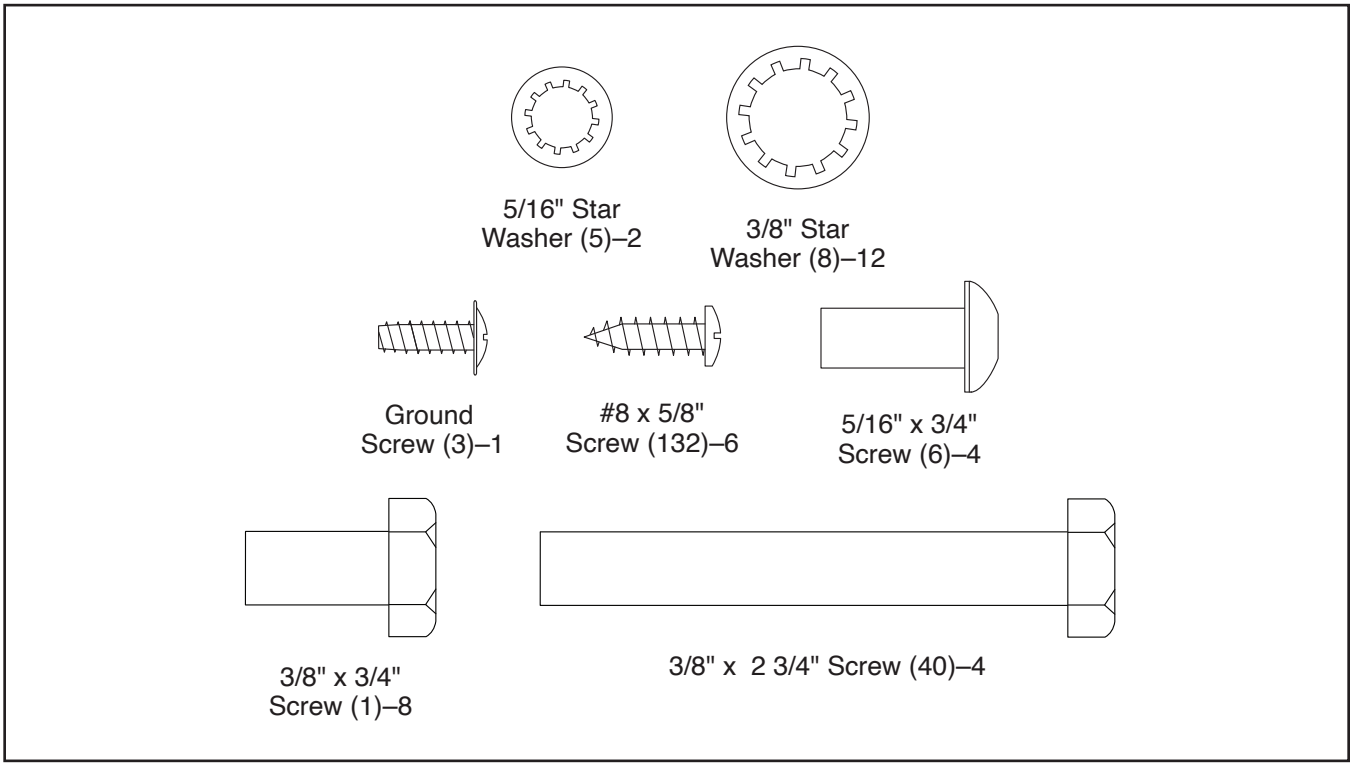

ASSEMBLY

- Assembly requires two persons.
- Place all parts in a cleared area and remove the packing materials. Do not dispose of the packing materials until you finish all assembly steps.
- After shipping, there may be an oily substance on the exterior of the treadmill. This is normal. If there is an oily substance on the treadmill, wipe it off with a soft cloth and a mild, non-abrasive cleaner.
- Left parts are marked “L” or “Left” and right parts are marked “R” or “Right.”
- To identify small parts, see page 6.
- Assembly can be completed using the included tools. Note: Keep the included tools. One or more of the tools may be needed to make adjustments in the future. To avoid damaging parts, do not use power tools for assembly or adjustment.

1. **Go to my.nordictrack.com and register your product.**
   - documents your ownership
   - activates your warranty
   - ensures priority customer support if you ever need assistance

1

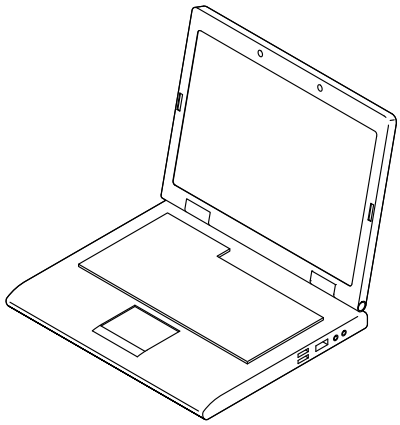

2. **Make sure that the power cord is unplugged.**

Remove any ties securing the Upright Wire (92) to the right side of the Base (101).

Next, identify the Right Upright (94), and have a second person hold it near the Base (101).

See the inset drawing. Locate the wire tie (A) in the Right Upright (94). Tie the wire tie through the wire pull (B) on the Upright Wire (92). Next, insert the wire pull and the Upright Wire into the Right Upright.

Then, pull the upper end of the wire tie (A) until the Upright Wire (92) is routed through the Right Upright (94). **Do not untie the wire tie from the Right Upright yet.**

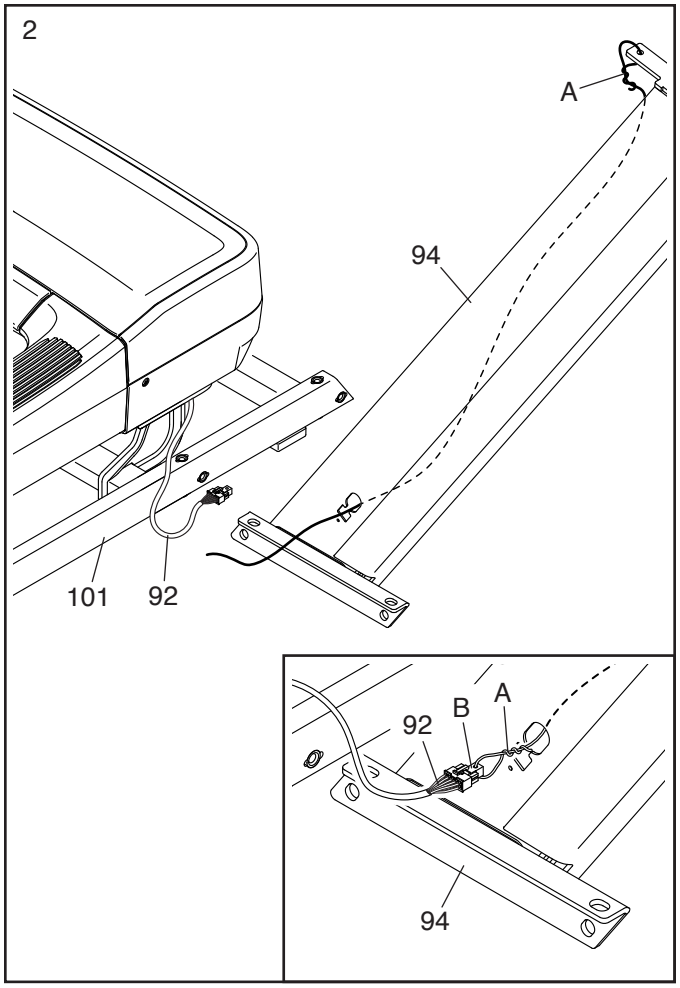

3. Remove the indicated screw (C) from the Right Upright (94); **discard the screw.**

Next, attach the ground wire (D) on the Upright Wire (92) to the Right Upright (94) with a Ground Screw (3).

See the inset drawing. Locate the small ear (E) on the Grommet (81) on the Upright Wire (92). Insert the ear into the square hole (F) in the Right Upright (94), and then press the Grommet into the square hole.

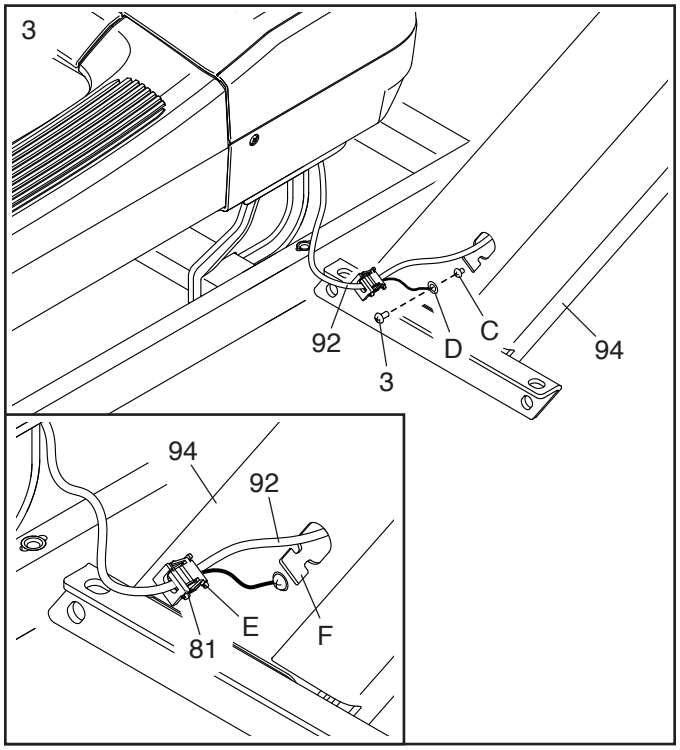

4. Have a second person hold the Right Upright (94) on the Base (101).

   Insert two 3/8" x 3/4" Screws (1) with two 3/8" Star Washers (8) into the top of the bracket on the Right Upright (94), and partially tighten the Screws into the Base (101); **do not fully tighten the Screws yet.**

   Finish attaching the Right Upright (94) with two additional 3/8" x 3/4" Screws (1) and 3/8" Star Washers (8); **do not fully tighten the Screws yet.**

   Attach the Left Upright (not shown) in the same way. Note: There is not a wire on the left side.

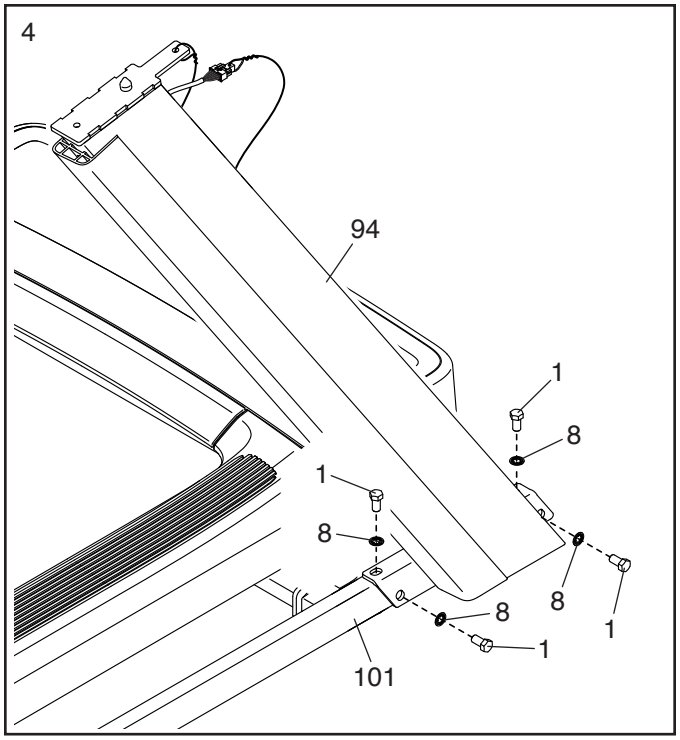

5. **See the inset drawing.** Untie the wire tie (A) from the Right Upright (94).

   Next, have a second person hold the handrail assembly (E) on the Left and Right Uprights (93, 94). Note: The handrail assembly has slots (U) that fit over the locator pins (P).

   Attach the handrail assembly (E) with four 3/8" x 2 3/4" Screws (40) and four 3/8" Star Washers (8); **start all four Screws, and then tighten them.**

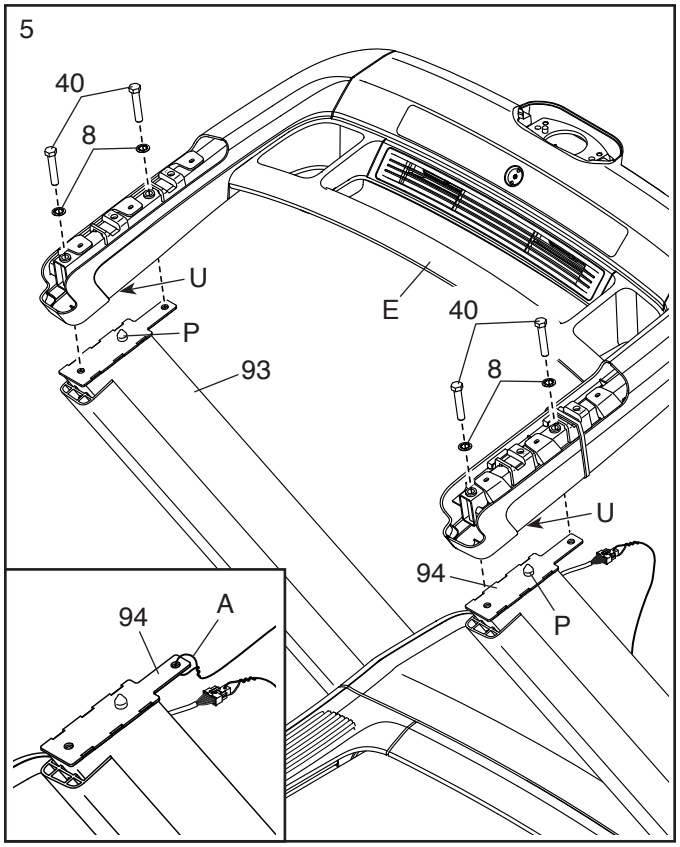

6. **See the inset drawing.** Press the small latch (H) on the connector on the Upright Wire (92), and remove and discard the wire pull (B). Then, cut and discard the plastic tie (Q) securing the Handrail Wire (91).

   Next, connect the Upright Wire (92) to the Handrail Wire (91). **IMPORTANT: The wire connectors should slide together easily and snap into place with an audible click. You must connect the wires properly for your treadmill to function properly.**

   Then, insert the connectors and the excess wire into the Right Upright (94).

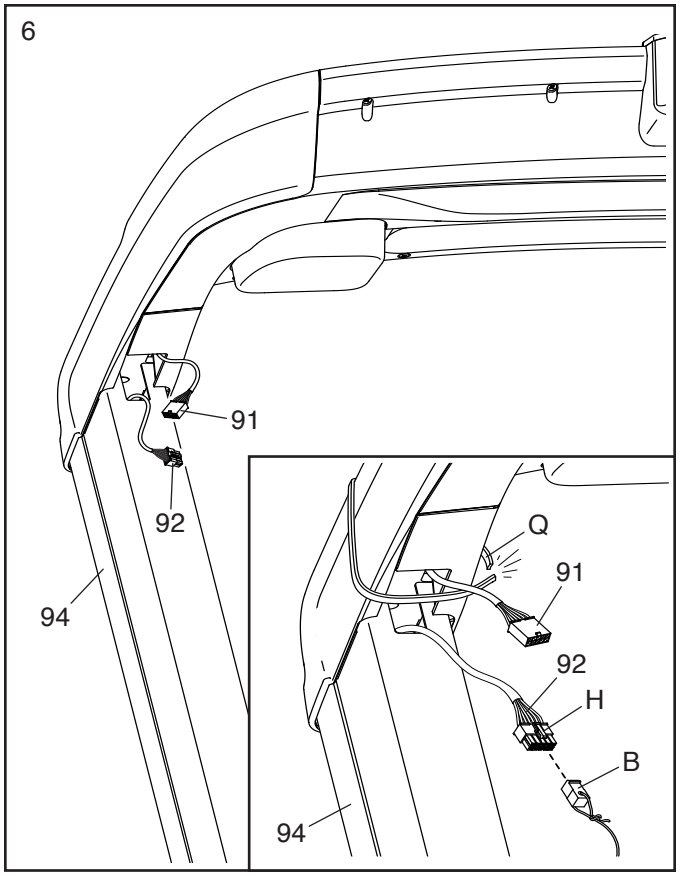

7. Identify the Right Handrail Cover (84). Insert the front edge of the Right Handrail Cover into the right side of the handrail assembly (E), and press down on the top of the Right Handrail Cover until it snaps into place.

   Attach the Left Handrail Cover (83) in the same way.

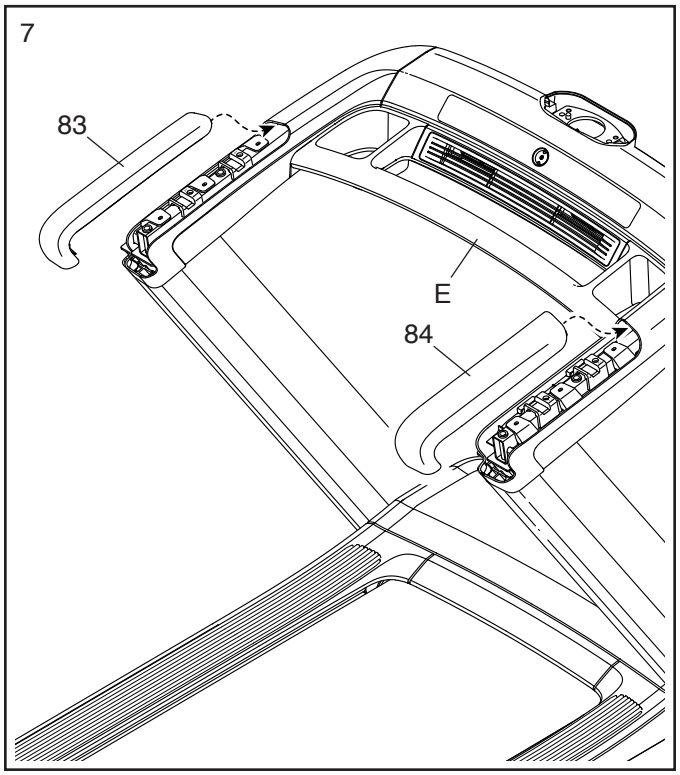

8. Have a second person hold the console assembly (F) near the handrail assembly (E).

   See the inset drawing. Make sure that the console assembly (F) is oriented so that the indicated hole (H) is aligned with the locator pin (I). Next, insert the console wires (G) downward through the round opening in the handrail assembly (E) and set the console assembly on the handrail assembly. **Do not pinch the wires.**

   Attach the console assembly (F) with four 5/16" x 3/4" Screws (6); **start all four Screws, and then tighten them.**

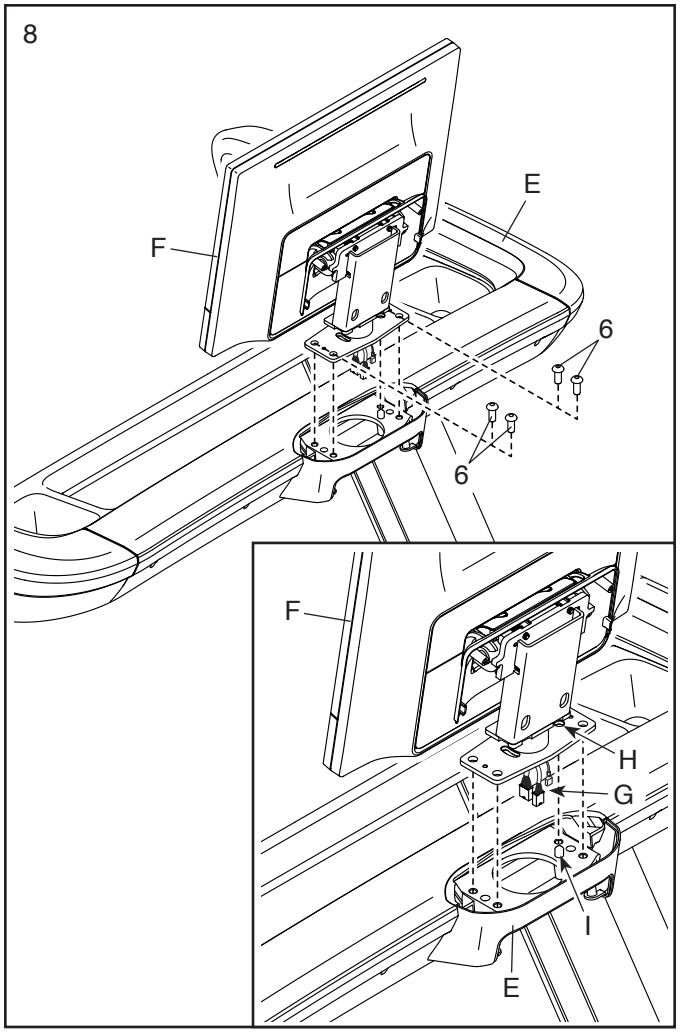

9. Attach the Large Pivot Cover (110) to the console assembly (F) with two #8 x 5/8" Screws (132).

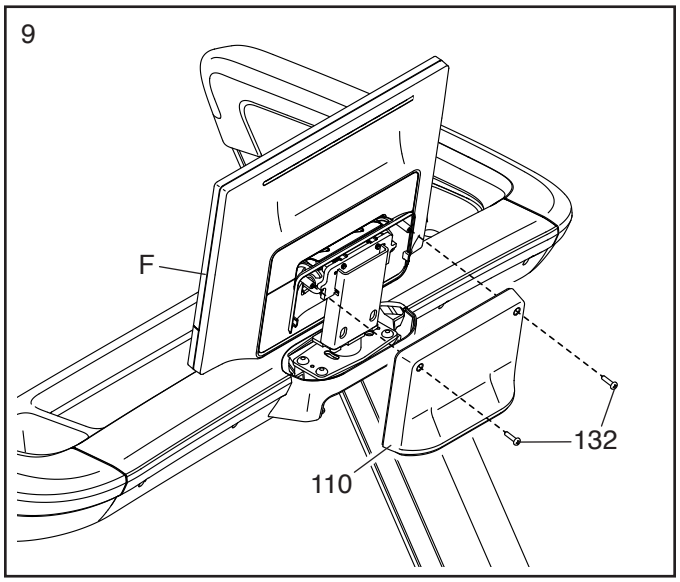

10. Tilt the top of the console assembly (F) in the direction shown by the arrow as far as you can. Then, attach the Lower Pivot Cover (34) to the console assembly with two #8 x 5/8" Screws (132).

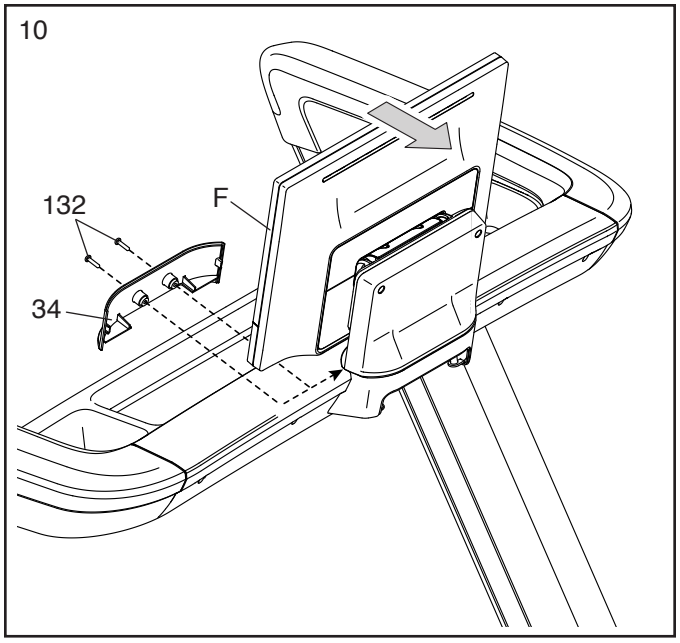

11. **See the left inset drawing.** Connect the console ground wire (R) to the ground wire (S) in the handrail assembly (E).

    See the right inset drawing. Connect the two console wires (G) to the two wires (T) in the handrail assembly (E). **IMPORTANT: The wire connectors should slide together easily and snap into place with an audible click. You must connect the wires properly for your treadmill to function properly.**

    Then, carefully push all wires into the handrail assembly (E), and attach the Access Cover (118) with two #8 x 5/8" Screws (132); **do not overtighten the Screws.**

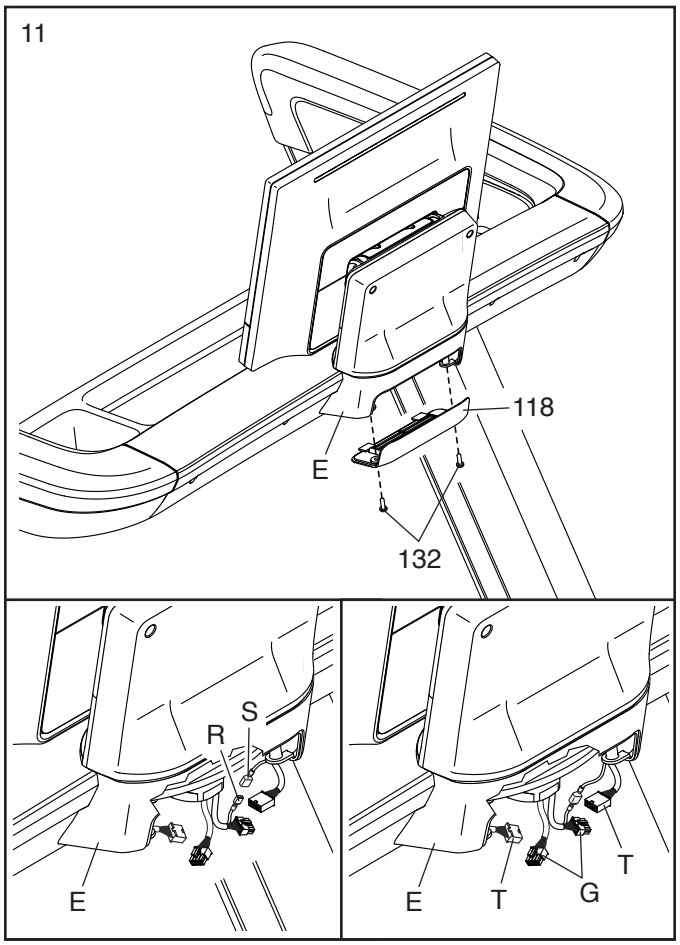

12. Raise the Frame (66) to the position shown. **IMPORTANT: Have a second person hold the Frame until step 14 is completed.**

See the inset drawing. Remove the two 5/16" x 1" Screws (9) from the Latch Crossbar (62).

Then, orient the Latch Crossbar (62) as shown, **with the "This side toward belt" sticker (L) facing the treadmill.** Attach the Latch Crossbar to the Frame (66) with the two 5/16" x 1" Screws (9) that you just removed and two 5/16" Star Washers (5).

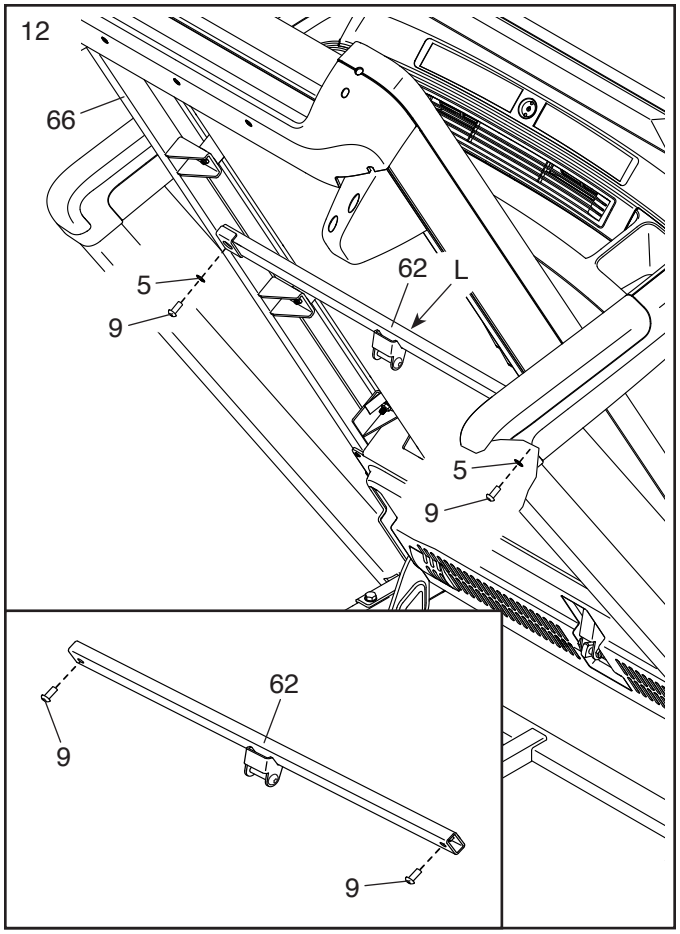

13. Remove the 5/16" Nut (12), the two 3/8" Thrust Washers (37), and the 5/16" x 1 3/4" Bolt (10) from the Base (101). **Note: If a 5/16" Bushing (130) comes out, reinsert it.**

Next, orient the Storage Latch (65) as shown.

Attach the Storage Latch (65) to the Base (101) with the 5/16" x 1 3/4" Bolt (10), the two 3/8" Thrust Washers (37), and the 5/16" Nut (12) that you just removed.

Then, remove the tie (N) from the Storage Latch (65).

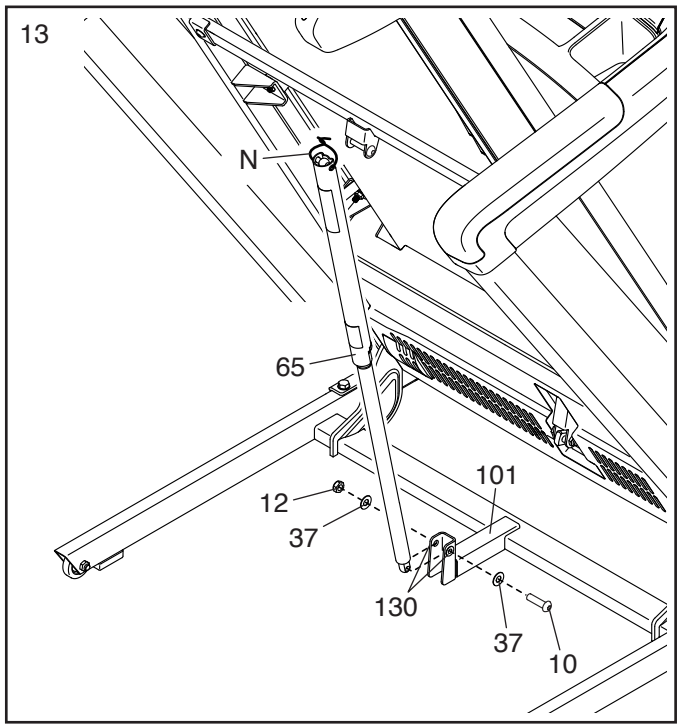

14. Remove the 5/16" Nut (12) and the 5/16" x 2 1/4" Bolt (11) from the Latch Crossbar (62).

    Next, align the Storage Latch (65) with the bracket on the Latch Crossbar (62), and insert the 5/16" x 2 1/4" Bolt (11) through the bracket and the Storage Latch. **This will push a spacer (O) out of the Storage Latch; discard the spacer. Note: If a 5/16" Bushing (130) comes out, reinsert it.**

    Next, tighten the 5/16" Nut (12) onto the 5/16" x 2 1/4" Bolt (11). **Do not overtighten the Nut; the Storage Latch (65) must be able to pivot.**

    Then, lower the Frame (66) (see HOW TO LOWER THE TREADMILL FOR USE on page 26).

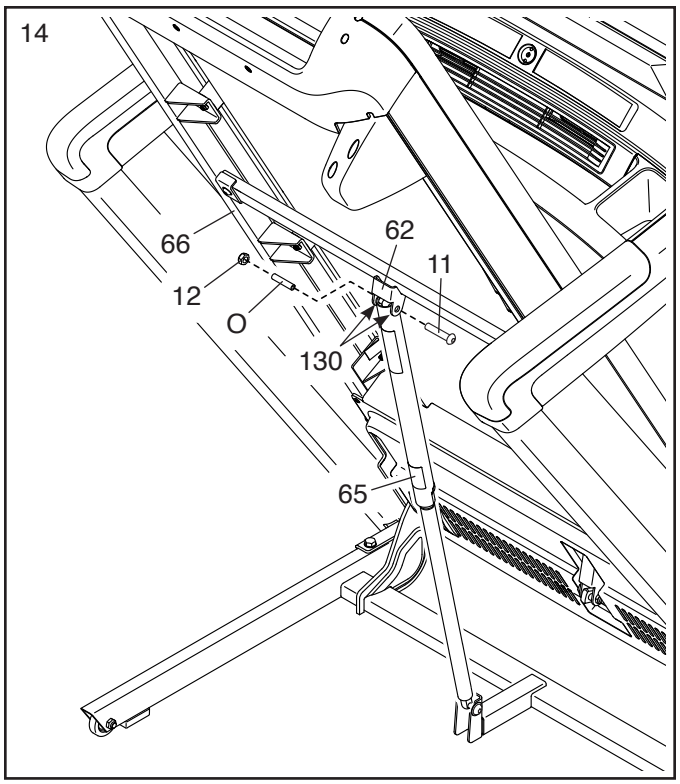

15. Firmly tighten the four 3/8" x 3/4" Screws (1) in the Right Upright (94).

    Repeat this step on the left side of the treadmill.

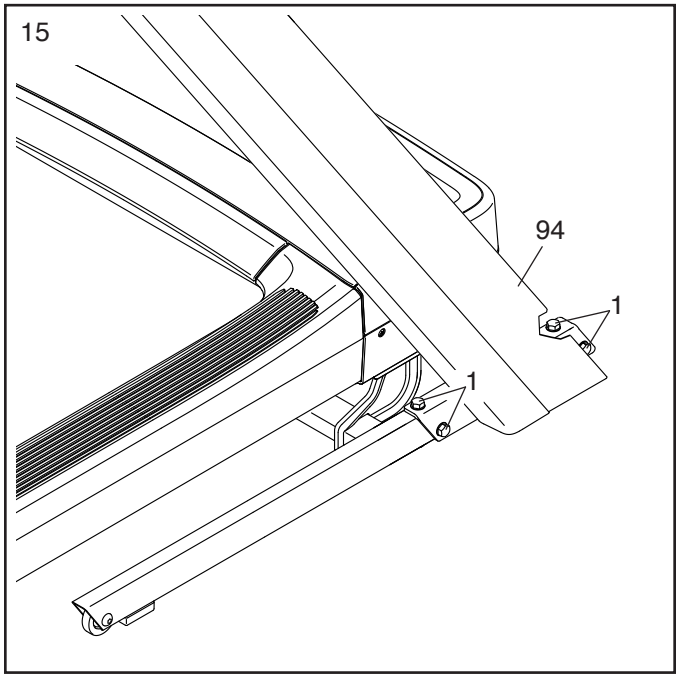

16. Identify the Right Base Cover (98). Slide the Right Base Cover under the Upright Wire (92) and onto the Base (101). **Make sure that the Right Base Cover is under the Upright Wire.**

    Repeat this step on the left side of the treadmill with the Left Base Cover (not shown). Note: There is not a wire on the left side.

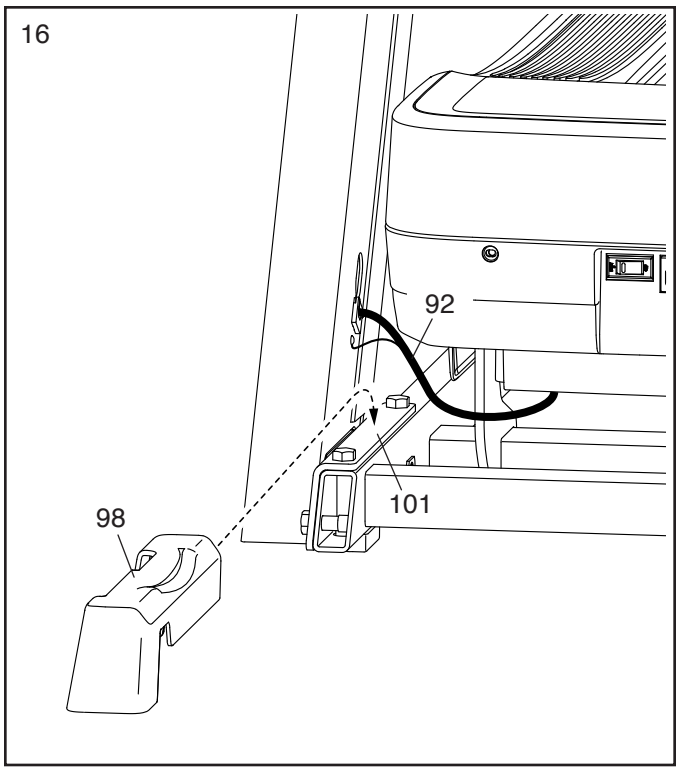

17. **Make sure that all parts are properly tightened before you use the treadmill.** If there are sheets of plastic on the treadmill decals, remove the plastic. To protect the floor or carpet, place a mat under the treadmill. To avoid damage to the console, keep the treadmill out of direct sunlight. Keep the included tools in a secure place; one or more of the tools may be needed to make adjustments to the treadmill in the future. Note: Extra hardware may be included.

HOW TO PLUG IN THE POWER CORD

USE A SURGE SUPPRESSOR

Your treadmill, like other electronic equipment, can be damaged by sudden voltage changes in your home's power. Voltage surges, spikes, and noise interference can result from weather conditions or from other appliances being turned on or off. **To decrease the risk of damaging the treadmill, always use a surge suppressor (A) with the treadmill. To purchase a surge suppressor, see precaution 15 on page 3.**

Use only a surge suppressor (A) that is UL 1449 listed as a transient voltage surge suppressor (TVSS). The surge suppressor must have a UL suppressed voltage rating of 400 volts or less and a minimum surge dissipation of 450 joules. The surge suppressor must also be electrically rated for 120 volts AC and 15 amps. There must be a monitoring light on the surge suppressor to indicate whether it is functioning properly. **Failure to use a properly functioning surge suppressor could result in damage to the control system of the treadmill and serious injury to users.**

PLUG IN THE POWER CORD

The treadmill must be grounded. If it should malfunction or break down, grounding provides a path of least resistance for electric current to reduce the risk of electric shock. The treadmill power cord (B) has a plug with a grounding pin (C) (see drawing 1 on this page).

⚠DANGER: Improper connection of the power cord increases the risk of electric shock. Do not modify the plug—if it will not fit an outlet, have a proper outlet installed by a qualified electrician. If you are unsure whether the treadmill is properly grounded, contact a qualified electrician.

Plug the power cord (B) into a surge suppressor (A), and plug the surge suppressor into an appropriate outlet (D) that is properly installed and grounded in accordance with all local codes and ordinances. **The outlet must be on a nominal 120-volt circuit capable of carrying 15 or more amps. To avoid overloading the circuit, do not plug other electrical devices, except for low-power devices such as cell phone chargers, into the surge suppressor or into an outlet on the same circuit. IMPORTANT: If the treadmill is connected to an AFCI-equipped outlet and your circuit breaker trips repeatedly when the treadmill is used, see the front cover of this manual to purchase an arc filter.**

1

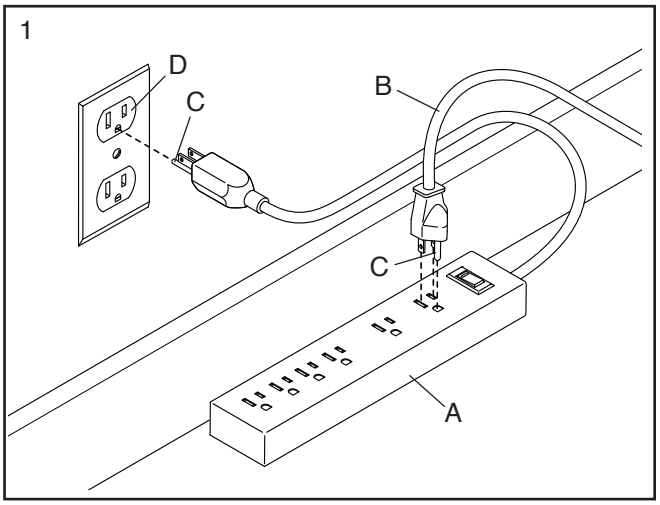

A temporary adapter (E) may be used to connect the surge suppressor (A) to a 2-pole receptacle (F) if a properly grounded outlet is not available.

2

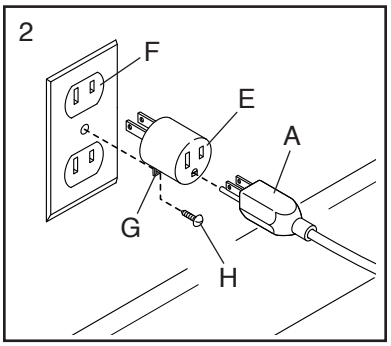

The lug (G) or wire extending from the adapter must be connected with a metal screw (H) to a permanent ground such as a properly grounded outlet box cover. **Some 2-pole receptacle outlet box covers are not grounded. Before using an adapter, contact a qualified electrician to determine whether the outlet box cover is grounded. The temporary adapter should be used only until a properly grounded outlet can be installed by a qualified electrician.**

HOW TO USE THE TREADMILL

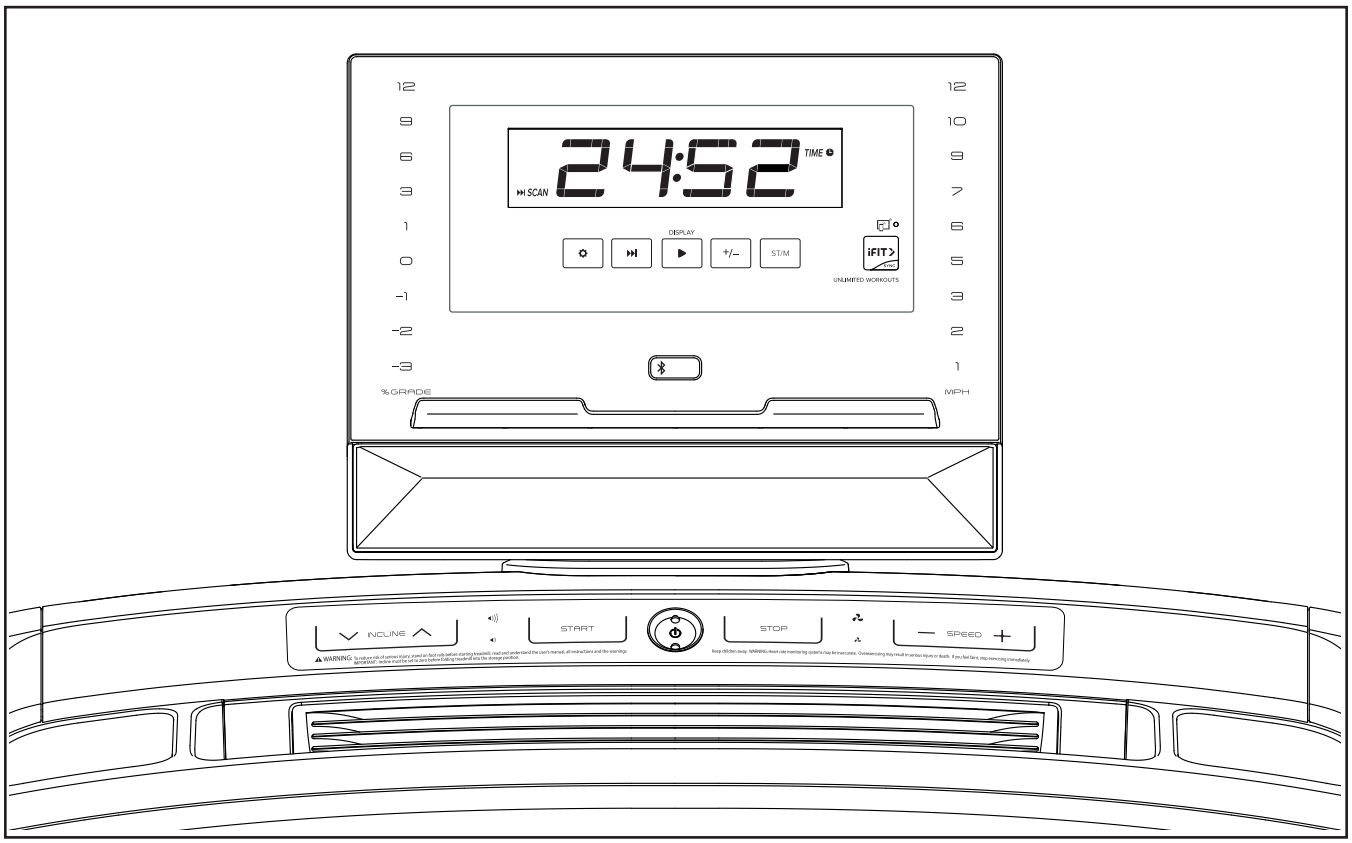

FEATURES OF THE CONSOLE

The treadmill console offers a selection of features designed to make your workouts more effective and enjoyable. When you use the manual mode of the console, you can change the speed and incline of the treadmill with a touch of a button. As you exercise, the console will display continuous exercise feedback.

You can even monitor your heart rate when you use a compatible heart rate monitor (see page 24).

The console also features wireless technology that enables the console to connect to iFIT®. With the iFIT app, you can choose from a rotating selection of featured workouts that automatically control the speed and incline of the treadmill as iFIT trainers guide you through immersive exercise sessions.

With an iFIT subscription, you can access a large and varied library of thousands of destination and studio workouts, create your own workouts, track your workout results, and access many other features.

To turn on and turn off the console, see page 18. **To use the manual mode,** see page 19. **To use an iFIT workout,** see page 21. **To change console settings,** see page 22.

Note: If there is a sheet of plastic on the display, remove the plastic.

HOW TO TURN ON THE CONSOLE

IMPORTANT: If the treadmill has been exposed to cold temperatures, allow it to warm to room temperature before you turn on the console. If you do not do this, you may damage the console display or other electrical components.

Plug in the power cord (see page 16). Next, locate the power switch on the treadmill frame near the power cord. Make sure that the power switch is in the reset position (A).

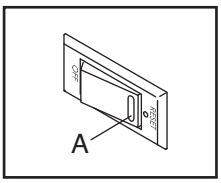

Next, **stand on the foot rails of the treadmill.** Find the clip (B) attached to the key (C), and slide the clip onto the waistband of your clothes. Then, insert the key into the console. After a moment, the display will light. **IMPORTANT: In an emergency, the key can be pulled from the console, causing the walking belt to slow to a stop. Test the clip by carefully taking a few steps backward; if the key is not pulled from the console, adjust the position of the clip.**

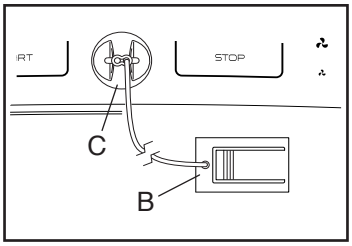

IMPORTANT: The console may feature a demo mode, designed to be used if the treadmill is displayed in a store. If the display lights as soon as you plug in the power cord and press the power switch into the reset position, the demo mode is turned on. To turn off the demo mode, hold down the Stop button for a few seconds. If the display remains lit, see HOW TO CHANGE CONSOLE SETTINGS on pages 22 and 23 to turn off the demo mode.

IMPORTANT: The first time you use the treadmill, you must calibrate the incline system. To calibrate the incline system, see HOW TO CHANGE CONSOLE SETTINGS on pages 22 and 23.

IMPORTANT: To prevent damage to the walking platform, wear clean athletic shoes while using the treadmill. The first time you use the treadmill, observe the alignment of the walking belt, and center it if necessary (see page 28).

HOW TO TURN OFF THE CONSOLE

When you finish using the treadmill, first remove the key from the console and put it in a secure place. Then, press the power switch into the off position and unplug the power cord. **IMPORTANT: If you do not do this, the electrical components of the treadmill may wear prematurely.**

IMPORTANT: To avoid damaging the treadmill, adjust the incline to 0% before you fold the treadmill.

HOW TO USE THE MANUAL MODE

1. **Insert the key into the console.**

   See HOW TO TURN ON THE CONSOLE on page 18.

2. **Select the manual mode.**

   When you turn on the console, the manual mode will be selected automatically.

3. **Get ready for the workout.**

   To use the fan, see page 23.

   To use the sound system, see page 24.

   To use a heart rate monitor, see page 24.

4. **Change the speed as desired.**

   To start the workout, press the Start button. The walking belt will start to move at a low speed.

   You can change the speed of the walking belt in the following ways:

   Speed increase and decrease buttons—Each time you press a button, the speed setting will change in small increments; if you hold down the button, the speed setting will change more quickly.

   Numbered speed buttons—Each time you press a button, the walking belt will gradually change speed until it reaches the selected speed setting. To select a speed setting that includes a decimal—such as 3.5 mph—press two numbered buttons in succession. For example, to select a speed setting of 3.5 mph, press the 3 button and then immediately press the 5 button.

5. **Change the incline as desired.**

   You can change the incline of the treadmill in the following ways:

   Incline increase and decrease buttons—Each time you press a button, the incline will gradually change until it reaches the selected incline setting.

   Numbered incline buttons—Each time you press a button, the incline will gradually change until it reaches the selected incline setting.

6. **Follow your progress.**

   The display can show the following workout information:

   Calories (CALS)—The approximate number of calories you have burned.

   Calories per Hour (CALS/HR)—The approximate number of calories you are burning per hour.

   Time—The elapsed time.

   Pace—The speed in minutes per mile or minutes per kilometer. To change the unit of measurement, press the St/M button.

   Vertical Distance (VRT FT or VRT M)—The distance you have walked or run in vertical feet or vertical meters. To change the unit of measurement, press the St/M button.

   Incline (%Grade)—The incline level.

   Distance (MI or KM)—The distance that you have walked or run in miles or kilometers. To change the unit of measurement, press the St/M button.

   Speed (MPH or KPH)—The speed in miles per hour or kilometers per hour. To change the unit of measurement, press the St/M button.

   Pulse (BPM and heart symbol)—Your heart rate when you use a compatible heart rate monitor (see page 24).

Press the Display button (D) repeatedly to view the desired workout information in the display.

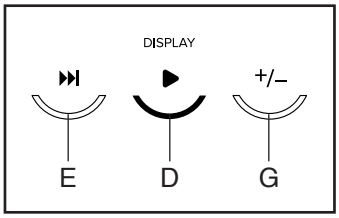

Scan mode—The console also has a scan mode that will display workout information in a repeating cycle. **To turn on the scan mode,** press the Scan button (E); the scan indicator (F) and the word SCAN will turn on in the display.

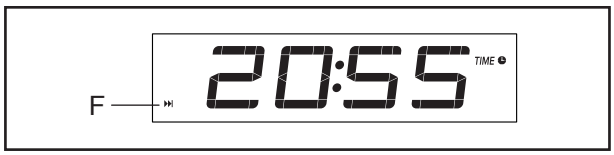

To manually advance the scan cycle, press the Scan button (E) repeatedly.

To turn off the scan mode, press the Display button (D); the scan indicator and the word SCAN will turn off.

You can also customize the scan mode to display only the desired workout information in the repeating cycle.

To customize the scan mode, first press the Display button (D) repeatedly until the workout information that you want to add to or remove from the scan cycle appears in the display.

Next, press the +/- button (G) to add or remove that workout information from the scan cycle. **When workout information is added,** its indicator will turn on in the display. **When workout information is removed,** its indicator will turn off.

Then, press the Scan button (E) to turn on the scan mode.

7. **Pause or end the workout.**

   To pause the workout, first **step onto the foot rails.** Next, press the Stop button. The walking belt will stop and the time will flash in the display.

   To continue the workout, press the Start button or one of the speed buttons.

   To end the workout and reset the display to zero, first **step onto the foot rails.** Next, press the Stop button twice. The word DONE will appear in the display, and then your workout results will be shown. Press the Stop button a third time to reset the display to zero.

8. **When you are finished using the treadmill, turn off the console.**

See page 18.

HOW TO USE AN IFIT WORKOUT

The console offers access to a large and varied library of iFIT workouts when you download the iFIT app to your smart device and connect it to the console.

Note: The console supports Bluetooth® connections to smart devices via the iFIT app and to compatible heart rate monitors. Other Bluetooth connections are not supported.

1. **Download and install the iFIT app on your smart device.**

   On your iOS® or Android™ smart device, open the App Store℠ or the Google Play™ store, search for the free iFIT app, and then install the app on your smart device. Make sure that the Bluetooth option is enabled on your smart device.

   Then, open the iFIT app and follow the instructions to set up an iFIT account and customize settings.

   Take time to explore the iFIT app and learn about its features and settings.

2. **Get ready for the workout.**

   To use the fan, see page 23.

   To use the sound system, see page 24.

   To use a heart rate monitor, see page 24. Note: If you are connecting both your heart rate monitor and your smart device to the console, **you must connect your heart rate monitor before you connect your smart device.**

3. **Connect your smart device to the console.**

   Press the iFIT Sync button on the console; the console pairing number will appear in the display. Then, follow the instructions in the iFIT app to connect your smart device to the console.

   When a connection is established, the LED on the console will turn solid blue.

4. **Select an iFIT workout.**

   In the iFIT app, touch the buttons at the bottom of the screen to select either the home screen (Home button) or the workout library (Browse button).

   To select a workout from the home screen or the workout library, simply touch the desired workout button on the screen. Slide or flick the screen to scroll as necessary.

   When you select a workout, the screen will show an overview of the workout that includes details such as the duration and distance of the workout and the approximate number of calories you will burn during the workout.

5. **Start the workout.**

   Touch *Start Workout* to start the workout.

   During some workouts, an iFIT trainer will guide you through an immersive video workout. Touch the screen in any open space to view and select music, trainer voice, and volume options for the workout.

   During some workouts, the screen will show a map of the route and a marker indicating your progress. Touch the buttons on the screen to select the desired map options.

   If the speed or incline setting for the current segment of the workout is too high or too low, you can manually override the setting by pressing the speed and incline buttons on the console.

   To return to the programmed speed and incline settings of the workout, touch *Follow Trainer*.

   Note: The calorie goal shown in the workout description is an estimate of the number of calories that you will burn during the workout. The actual number of calories that you burn will depend on various factors, such as your weight. In addition, if you manually change the speed or incline during the workout, the number of calories you burn will be affected.

6. **Pause or end the workout.**

To pause the workout, simply touch the screen or press the Stop button on the console. To continue the workout, touch the play symbol on the screen, or press the Start button on the console.

To end the workout, touch the screen to pause the workout, and then follow the prompts on the screen to end the workout and return to the home screen.

When the workout ends, a workout summary will appear on the screen. If desired, you can select options such as adding the workout to your schedule or adding the workout to your favorites list. Then, touch *Finish* to return to the home screen.

7. **Disconnect your smart device from the console.**

To disconnect your smart device from the console, select the disconnect option in the iFIT app.

Note: All Bluetooth connections between the console and other devices (including any smart devices, heart rate monitors, and so forth) will be disconnected.

8. **When you are finished using the treadmill, turn off the console.**

See page 18.

HOW TO CHANGE CONSOLE SETTINGS

1. **Select the settings mode.**

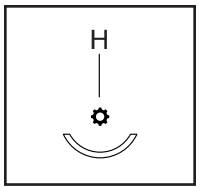

To select the settings mode, press the settings button (H). The first settings screen will appear in the display. Note: If you have selected a workout, you may need to press the Stop button repeatedly to return to the main menu before selecting the settings mode.

2. **Navigate the settings mode.**

While the settings mode is selected, you can navigate through several settings screens. Press the Stop button repeatedly to select the desired settings screen.

3. **Change settings as desired.**

Unit of Measurement—The currently selected unit of measurement may appear in the display. The console can show speed and distance in standard or metric units of measurement. To change the unit of measurement, press the Speed increase button repeatedly. To view workout information in standard units, select STD. To view workout information in metric units, select MET.



Software Version Number—The software version number will appear in the display.

Incline System Calibration—The letters CAL will appear in the display. If the incline system is not functioning properly, it may need to be calibrated. To calibrate the incline system, press the Incline increase or decrease button. The frame will automatically rise to the maximum incline level, descend to the minimum level, and then return to the starting position. When the treadmill stops moving, the incline system is calibrated.



IMPORTANT: Keep pets, feet, and other objects away from the treadmill while the incline system is calibrating. In an emergency, remove the key from the console to stop the calibration operation. Note: The incline system may occasionally calibrate automatically when you turn on the treadmill. Wait for the frame to stop moving before you attempt to use the treadmill.

Display Test—This screen is intended to be used by service technicians to identify whether the display is working correctly.

Button Test—This screen is intended to be used by service technicians to identify whether a certain button is working correctly.

Demo Mode—The currently selected demo mode option will appear in the display. The console features a demo mode, designed to be used if the treadmill is displayed in a store. If the demo mode is turned on, the console will not turn off and the display will not be reset when you finish exercising. Press the Speed increase button repeatedly to select a demo mode option. To turn on the demo mode, select DON. To turn off the demo mode, select DOFF.



Total Time—The word TIME will appear in the display. The display will show the total number of hours that the treadmill has been used.

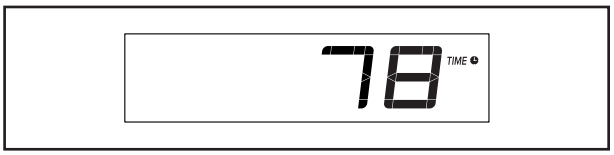

Total Distance—The letters MI or KM will appear in the display. The display will show the total distance (in miles or kilometers) that the walking belt has moved.



Contrast Level—The currently selected contrast level will appear in the display. Press the Incline increase and decrease buttons to adjust the contrast level.

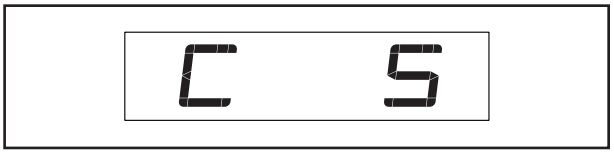

4. Exit the settings mode.

Press the settings button (H) to exit the settings mode.

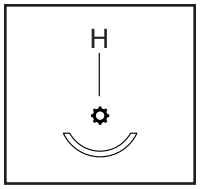

HOW TO USE THE FAN

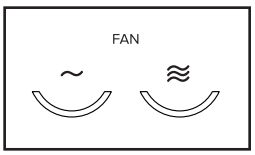

The fan has several speed settings, including an auto mode. While the auto mode is selected, the speed of the fan will automatically increase or decrease as the speed of the walking belt increases or decreases. Press the fan increase and decrease buttons on the console repeatedly to select a fan speed or to turn off the fan.

HOW TO USE THE SOUND SYSTEM

1. **Make sure that your device's Bluetooth setting is turned on, and hold your device near the console.**

2. **Press and hold the Bluetooth Audio button on the console for 3 seconds.**

   A tone will sound and the Bluetooth button will begin flashing to indicate that the console has entered pairing mode.

3. **Pair your device to the console.**

   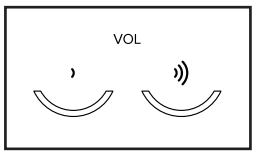

   Once your device and the console pair successfully, the audio from your device will play through the console speakers. To adjust the volume, press the Vol increase and decrease buttons on the console or use the volume control on your personal audio player.

   Note: The console can save multiple devices in its memory. If you have previously paired your device to the console, you can simply press the Bluetooth Audio button to connect your device to the console.

4. **Erase the console's device memory if necessary.**

   If you need to erase all the Bluetooth-enabled devices saved in the console's memory, press and hold the Bluetooth Audio button for 10 seconds

HOW TO USE THE CHARGING PORT

The console features a charging port to charge USB-C compatible devices, such as smartphones and tablets, while you exercise.

To use the charging port, plug a USB-C charging cable (not included) into the receptacle on your device and into the charging port on the right side of the console; **make sure that the USB-C charging cable is fully plugged in.** Note: The charging port cannot be used to view or transfer data or to play music through the console sound system.

HOW TO USE AN OPTIONAL HEART RATE MONITOR

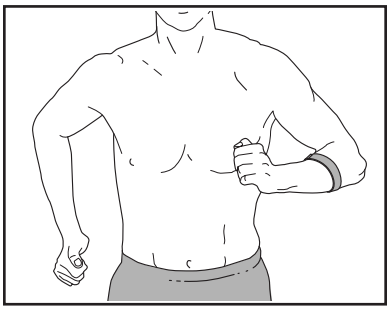

Whether your goal is to burn fat or to strengthen your cardiovascular system, the key to achieving the best results is to maintain the proper heart rate during your work-outs. The optional heart rate monitor will enable you to continuously monitor your heart rate while you exercise, helping you to reach your personal fitness goals. **To purchase an optional heart rate monitor, please see the front cover of this manual.**

The console is compatible with all Bluetooth® Smart heart rate monitors.

To connect your Bluetooth Smart heart rate monitor to the console, press the iFIT Sync button on the console; the console pairing number will appear in the display. When your heart rate monitor is connected, the LED on the console will flash red twice. Note: If there is more than one compatible heart rate monitor near the console, the console will connect to the heart rate monitor with the strongest signal.

To disconnect your heart rate monitor from the console, press and hold the iFIT Sync button on the console until the LED on the console turns solid green. Note: All Bluetooth connections between the console and other devices (including any smart devices, heart rate monitors, and so forth) will be disconnected.

FCC INFORMATION

This console has been tested and found to comply with the limits for a Class B digital device, pursuant to part 15 of the FCC Rules. These limits are designed to provide reasonable protection against harmful interference in a residential installation. This equipment generates, uses, and can radiate radio frequency energy and, if not installed and used in accordance with the instructions, may cause harmful interference to radio communications. However, there is no guarantee that interference will not occur in a particular installation. If this equipment does cause harmful interference to radio or television reception, which can be determined by turning the equipment off and on, try to correct the interference by one or more of the following measures:

- Reorient or relocate the receiving antenna.
- Increase the separation between the equipment and the receiver.
- Connect the equipment into an outlet on a circuit different from that to which the receiver is connected.
- Consult the dealer or an experienced radio/TV technician for help.

FCC CAUTION: To assure continued compliance, use only shielded interface cables when connecting to computer or peripheral devices. Changes or modifications not expressly approved by the party responsible for compliance could void the user's authority to operate this equipment.

IMPORTANT: To satisfy exposure compliance requirements, the antenna and transmitter in the console must be at least 8 in. (20 cm) from all persons and must not be near or connected to any other antenna or transmitter.

Note: The console contains FCC ID: OMCBMD1.

HOW TO FOLD AND MOVE THE TREADMILL

HOW TO FOLD THE TREADMILL

To avoid damaging the treadmill, adjust the incline to 0% before you fold the treadmill. Then, remove the key and unplug the power cord. CAUTION: You must be able to safely lift 45 lbs. (20 kg) to raise, lower, or move the treadmill.

1. Hold the metal frame (A) firmly in the location shown by the arrow below. **CAUTION: Do not hold the frame by the plastic foot rails. Bend your legs and keep your back straight.**

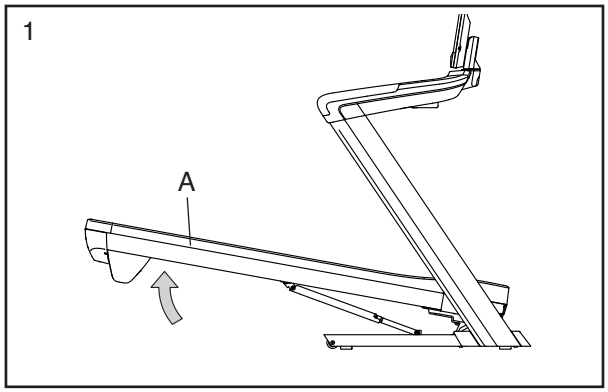

2. Raise the frame (A) until the storage latch (B) locks in the storage position. **CAUTION: Make sure that the storage latch locks.**

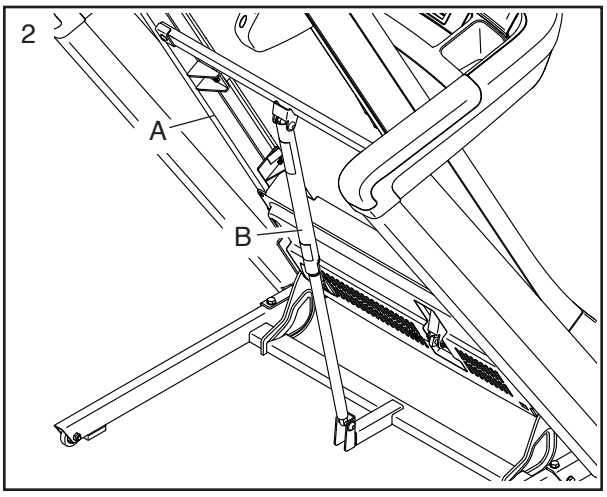

To protect the floor or carpet, place a mat under the treadmill. Keep the treadmill out of direct sunlight. Do not leave the treadmill in the storage position in temperatures above 85°F (30°C).

HOW TO MOVE THE TREADMILL

Before moving the treadmill, fold it as described at the left. **CAUTION: Make sure that the storage latch is in the locked position. Moving the treadmill requires two people. Take any necessary measures to avoid damaging your floor.**

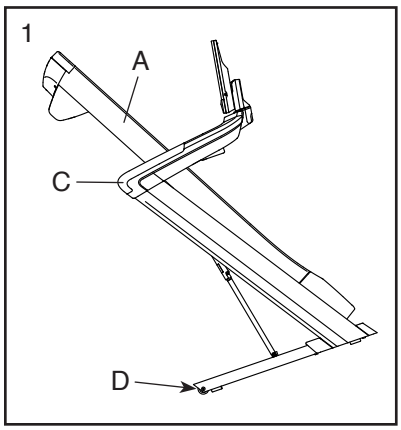

1. Hold the frame (A) and one of the handrails (C), and place one foot against a wheel (D).

2. Pull back on the handrail (C) until the treadmill will roll on the wheels (D), and carefully move it to the desired location. **CAUTION: Do not move the treadmill without tipping it back, do not pull on the frame, and do not move the treadmill over an uneven surface.**

3. Place one foot against a wheel (D), and carefully lower the treadmill.

HOW TO LOWER THE TREADMILL FOR USE

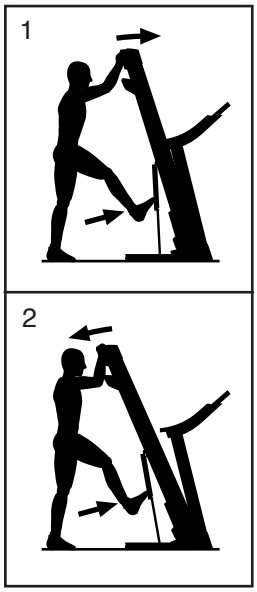

1. Push the upper end of the frame forward, and gently press the upper part of the storage latch with your foot at the same time.

2. While pressing the storage latch with your foot, pull the upper end of the frame toward yourself.

3. Step back and let the frame descend to the floor.

MAINTENANCE AND TROUBLESHOOTING

MAINTENANCE

Regular maintenance is important for optimal performance and to reduce wear. Inspect and properly tighten all parts each time the treadmill is used. **Replace any worn parts immediately.** Use only manufacturer-supplied parts.

Regularly clean the treadmill and keep the walking belt clean and dry. First, **press the power switch into the off position and unplug the power cord.** Wipe exterior parts of the treadmill with a damp cloth and a small amount of mild soap. **IMPORTANT: Do not spray liquids directly onto the treadmill. To avoid damage to the console, keep liquids away from the console.** Then, thoroughly dry the treadmill with a soft towel.

TROUBLESHOOTING

Many problems can be solved with the simple steps in this section. Find the symptom that applies, and follow the steps listed. If further assistance is needed, go to my.iFIT.com, scan the QR code at the right, or call 1-833-680-IFIT (1-833-680-4348).

SYMPTOM: The power does not turn on

a. Make sure that the power cord is plugged into a surge suppressor, and that the surge suppressor is plugged into a properly grounded outlet (see page 16). Use only a surge suppressor that meets all of the specifications described on page 16. **IMPORTANT: If the treadmill is connected to an AFCI-equipped outlet and your circuit breaker trips repeatedly when the treadmill is used, see TROUBLESHOOTING above to purchase an arc filter.**

b. After the power cord has been plugged in, make sure that the key is inserted into the console.

c. Check the power switch located on the treadmill frame near the power cord. If the switch protrudes as shown (A), the switch has tripped. To reset the power switch, wait for five minutes and then press the switch back in (B).

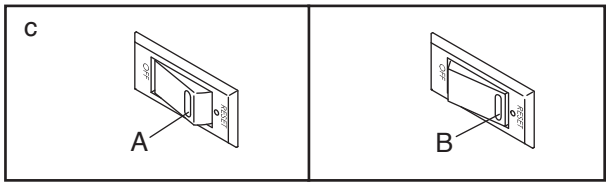

SYMPTOM: The power turns off during use

a. Check the power switch (see drawing c above). If the switch has tripped, wait for five minutes and then press the switch back in.

b. Make sure that the power cord is plugged in. If the power cord is plugged in, unplug it, wait for five minutes, and then plug it back in.

c. Remove the key from the console, and then reinsert it.

d. If the treadmill still will not run, please see TROUBLESHOOTING at the left for further assistance.

SYMPTOM: The incline of the treadmill does not change correctly

a. See page 23 to calibrate the incline system.

SYMPTOM: The console display remains lit when you remove the key from the console

a. The console features a display demo mode, designed to be used if the treadmill is displayed in a store. See HOW TO CHANGE CONSOLE SETTINGS on pages 22 and 23 to check your console settings and turn off the demo mode if needed.

SYMPTOM: The walking belt slows when walked on

a. Use only a surge suppressor that meets all of the specifications described on page 16.

b. If the walking belt is overtightened, treadmill performance may decrease and the walking belt may become damaged. Remove the key and **UNPLUG THE POWER CORD.** Using the hex key, turn both idler roller screws (C) counterclockwise, 1/4 of a turn. When the walking belt is properly tightened, you should be able to lift each edge of the walking belt 2 to 3 in. (5 to 7 cm) off the walking platform. **Be careful to keep the walking belt centered.** Then, plug in the power cord, insert the key, and walk on the treadmill for a few minutes. Repeat until the walking belt is properly tightened.

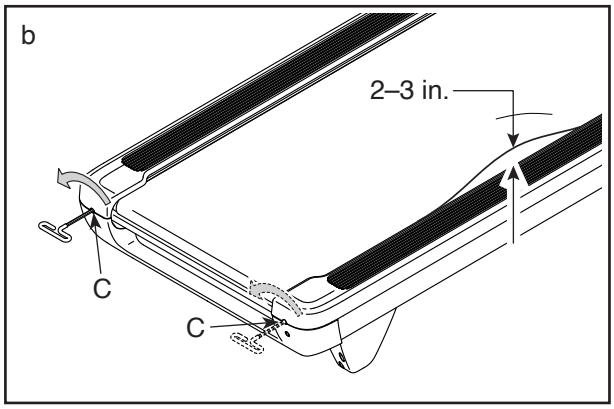

c. Your treadmill features a walking belt coated with high-performance lubricant. **IMPORTANT: Never apply silicone spray or other substances to the walking belt or the walking platform unless instructed to do so by an authorized service representative. Such substances may deteriorate the walking belt and cause excessive wear.** If you suspect that the walking belt needs more lubricant, please see TROUBLESHOOTING on page 27 for further assistance.

d. If the walking belt still slows when walked on, please see TROUBLESHOOTING on page 27 for further assistance.

SYMPTOM: The walking belt is off-center

a. First, remove the key and **UNPLUG THE POWER CORD. If the walking belt has shifted to the left,** use the hex key to turn the left idler roller screw clockwise 1/2 of a turn; **if the walking belt has shifted to the right,** turn the left idler roller screw counterclockwise 1/2 of a turn. **Be careful not to overtighten the walking belt.** Then, plug in the power cord, insert the key, and walk on the treadmill for a few minutes. Repeat until the walking belt is centered.

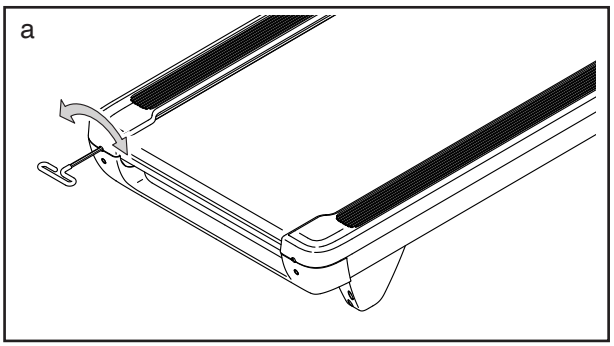

SYMPTOM: The walking belt slips when walked on

a. First, remove the key and **UNPLUG THE POWER CORD.** Using the hex key, turn both idler roller screws clockwise, 1/4 of a turn. When the walking belt is correctly tightened, you should be able to lift each edge of the walking belt 2 to 3 in. (5 to 7 cm) off the walking platform. **Be careful to keep the walking belt centered.** Then, plug in the power cord, insert the key, and walk on the treadmill for a few minutes. Repeat until the walking belt is properly tightened.

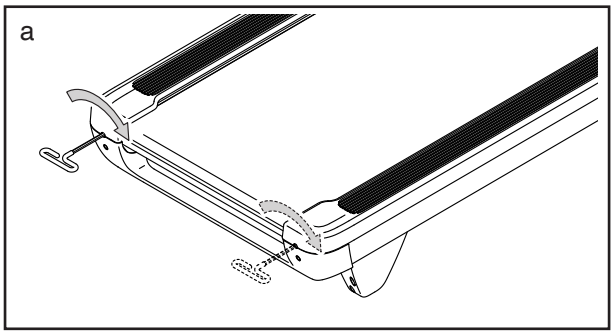

SYMPTOM: The console does not stay in place when it is tilted upward and downward

a. Using a standard screwdriver, carefully pry the upper console cover (F) and then the lower console cover (G) off the console (H). **Be careful to avoid damaging these parts.**

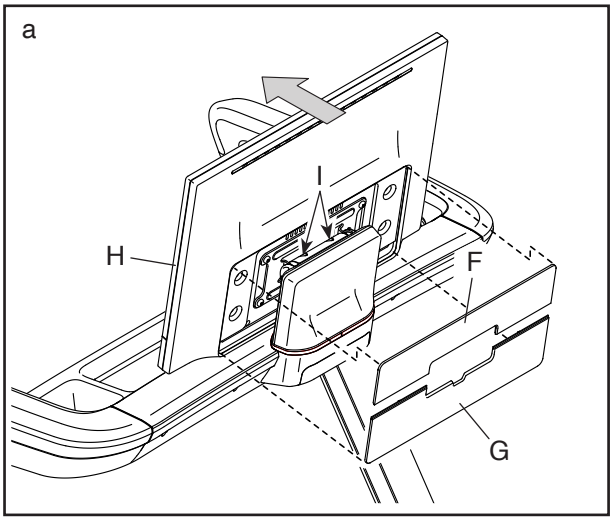

Next, tilt the top of the console (H) in the direction shown by the arrow, and use one of the included hex keys to tighten the two indicated M6 x 15mm screws (I) a small amount.

vb. Tilt the console (H) to the position shown, and use the hex key to tighten the two indicated M6 x 15mm screws (I) a small amount, until the upward and downward movement of the console no longer feels loose. Then, see the upper drawing and reattach the lower console cover (G) and then the upper console cover (F).

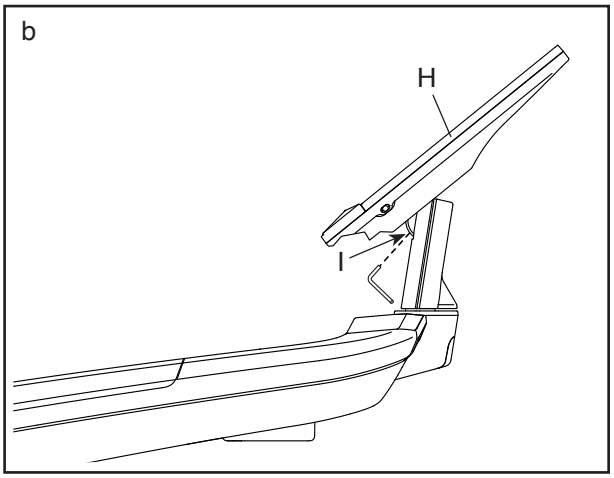

EXERCISE GUIDELINES

⚠ WARNING: Before beginning this or any exercise program, consult your physician. This is especially important for persons over age 35 or persons with pre-existing health problems.

These guidelines will help you to plan your exercise program. For detailed exercise information, obtain a reputable book or consult your physician. Remember, proper nutrition and adequate rest are essential for successful results.

EXERCISE INTENSITY

Whether your goal is to burn fat or to strengthen your cardiovascular system, exercising at the proper intensity is the key to achieving results. You can use your heart rate as a guide to find the proper intensity level. The chart below shows recommended heart rates for fat burning and aerobic exercise.

165	155	145	140	130	125	115	♥
145	138	130	125	118	110	103	♥
125	120	115	110	105	95	90	♥
20	30	40	50	60	70	80	

To find the proper intensity level, find your age at the bottom of the chart (ages are rounded off to the nearest ten years). The three numbers listed above your age define your "training zone." The lowest number is the heart rate for fat burning, the middle number is the heart rate for maximum fat burning, and the highest number is the heart rate for aerobic exercise.

Burning Fat—To burn fat effectively, you must exercise at a low intensity level for a sustained period of time. During the first few minutes of exercise, your body uses carbohydrate calories for energy. Only after the first few minutes of exercise does your body begin to use stored fat calories for energy. If your goal is to burn fat, adjust the intensity of your exercise until your heart rate is near the lowest number in your training zone. For maximum fat burning, exercise with your heart rate near the middle number in your training zone.

Aerobic Exercise—If your goal is to strengthen your cardiovascular system, you must perform aerobic exercise, which is activity that requires large amounts of oxygen for prolonged periods of time. For aerobic exercise, adjust the intensity of your exercise until your heart rate is near the highest number in your training zone.

HOW TO MEASURE YOUR HEART RATE

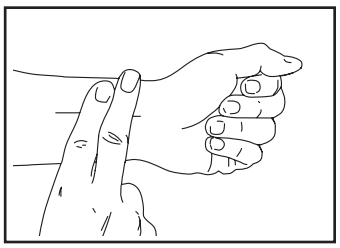

To measure your heart rate, exercise for at least four minutes. Then, stop exercising and place two fingers on your wrist as shown. Take a six-second heartbeat count, and multiply the result by 10 to find your heart rate. For example, if your six-second heartbeat count is 14, your heart rate is 140 beats per minute.

WORKOUT GUIDELINES

Warming Up—Start with 5 to 10 minutes of stretching and light exercise. A warm-up increases your body temperature, heart rate, and circulation in preparation for exercise.

Training Zone Exercise—Exercise for 20 to 30 minutes with your heart rate in your training zone. (During the first few weeks of your exercise program, do not keep your heart rate in your training zone for longer than 20 minutes.) Breathe regularly and deeply as you exercise; never hold your breath.

Cooling Down—Finish with 5 to 10 minutes of stretching. Stretching increases the flexibility of your muscles and helps to prevent post-exercise problems.

EXERCISE FREQUENCY

To maintain or improve your condition, complete three workouts each week, with at least one day of rest between workouts. After a few months of regular exercise, you may complete up to five workouts each week, if desired. Remember, the key to success is to make exercise a regular and enjoyable part of your everyday life.

SUGGESTED STRETCHES

The correct form for several basic stretches is shown at the right. Move slowly as you stretch—never bounce.

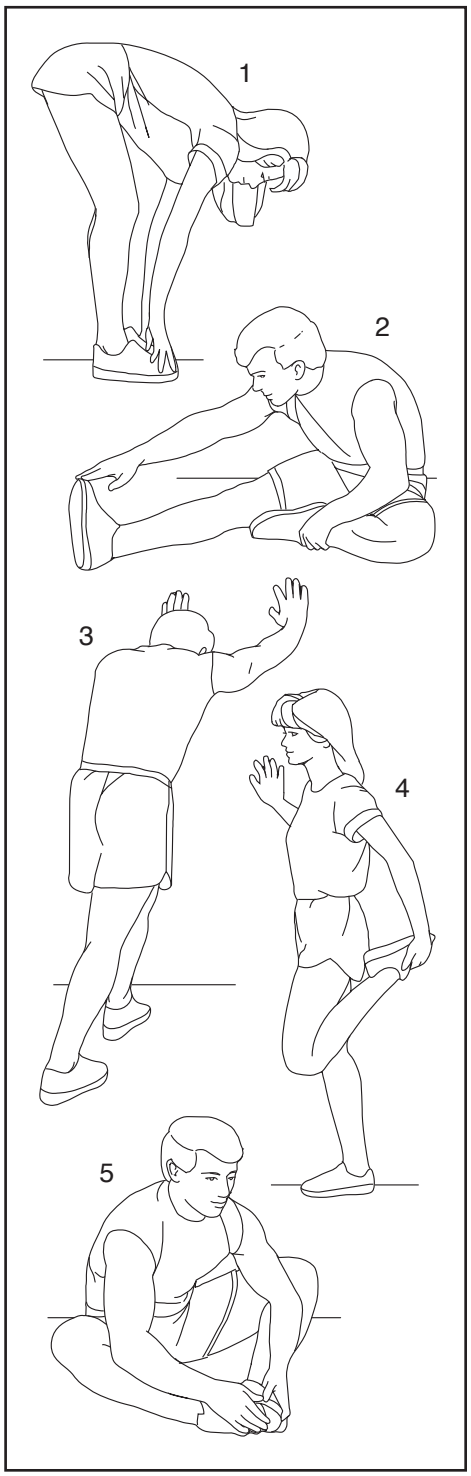

1. Toe Touch Stretch

Stand with your knees bent slightly and slowly bend forward from your hips. Allow your back and shoulders to relax as you reach down toward your toes as far as possible. Hold for 15 counts, then relax. Repeat 3 times. Stretches: Hamstrings, back of knees and back.

2. Hamstring Stretch

Sit with one leg extended. Bring the sole of the opposite foot toward you and rest it against the inner thigh of your extended leg. Reach toward your toes as far as possible. Hold for 15 counts, then relax. Repeat 3 times for each leg. Stretches: Hamstrings, lower back and groin.

3. Calf/Achilles Stretch

With one leg in front of the other, reach forward and place your hands against a wall. Keep your back leg straight and your back foot flat on the floor. Bend your front leg, lean forward and move your hips toward the wall. Hold for 15 counts, then relax. Repeat 3 times for each leg. To cause further stretching of the achilles tendons, bend your back leg as well. Stretches: Calves, achilles tendons and ankles.

4. Quadriceps Stretch

With one hand against a wall for balance, reach back and grasp one foot with your other hand. Bring your heel as close to your buttocks as possible. Hold for 15 counts, then relax. Repeat 3 times for each leg. Stretches: Quadriceps and hip muscles.

5. Inner Thigh Stretch

Sit with the soles of your feet together and your knees outward. Pull your feet toward your groin area as far as possible. Hold for 15 counts, then relax. Repeat 3 times. Stretches: Quadriceps and hip muscles.

NOTES

NOTES

PART LIST

Model No. NTL13125.0 R0624B

Key No.	Qty.	Description
1	8	3/8" x 3/4" Screw
2	5	M4 x 10mm Screw
3	1	Ground Screw
4	–	(Not Used)
5	2	5/16" Star Washer
6	4	5/16" x 3/4" Screw
7	69	#8 x 3/4" Screw
8	12	3/8" Star Washer
9	2	5/16" x 1" Screw
10	5	5/16" x 1 3/4" Bolt
11	1	5/16" x 2 1/4" Bolt
12	6	5/16" Nut
13	8	#8 x 3/4" Tek Screw
14	3	1/4" x 2 1/2" Screw
15	11	#8 x 1/2" Screw
16	4	M3 x 12mm Screw
17	1	3/8" x 1 1/2" Bolt
18	2	#8 x 5/8" Pan Head Screw
19	4	Plastic Standoff
20	1	3/8" x 1 3/4" Bolt
21	4	#8 Belt Guide Screw
22	2	#8 x 3/4" Pan Head Screw
23	4	M6 x 25mm Screw
24	4	M6 x 16mm Screw
25	2	5/16" Motor Screw
26	2	3/8" x 1 3/8" Bolt
27	12	#8 x 3/4" Truss Head Screw
28	4	1/4" x 1" Screw
29	2	3/8" x 1 1/8" Screw
30	4	5/16" Flat Washer
31	2	1/4" x 1 1/4" Screw
32	2	#8 Washer
33	14	#8 x 5/8" Flat Head Screw
34	1	Lower Pivot Cover
35	1	Controller Mount
36	2	1/2" Plastic Washer
37	4	3/8" Thrust Washer
38	4	3/8" Nut
39	5	1/4" Nut
40	4	3/8" x 2 3/4" Screw
41	–	(Not Used)
42	1	Right Rear Foot
43	4	3/8" Plastic Bushing
44	4	Platform Cushion
45	1	Left Frame Cover
46	1	Right Frame Cover
47	2	3/8" Locknut
48	1	Idler Roller
49	1	Walking Platform
50	1	Walking Belt
51	1	Left Foot Rail
52	1	Right Foot Rail
53	2	Belt Guide
54	4	Rubber Cushion
55	1	Drive Roller
56	2	9/32" Plastic Bushing
57	1	Incline Power Board
58	1	Power Board Bracket
59	1	Power Supply
60	1	Power Supply Bracket
61	3	Cable Tie
62	1	Latch Crossbar
63	1	Drive Motor
64	1	Motor Belt
65	1	Storage Latch
66	1	Frame
67	1	Left Rear Foot
68	1	Rear End Cap
69	1	Motor Hood
70	1	Incline Frame
71	1	Incline Motor
72	2	Frame Spacer
73	2	Incline Motor Spacer
74	1	Controller
75	–	(Not Used)
76	1	Controller Bracket
77	8	Fan Screw
78	1	Power Cord
79	1	Power Cord Grommet
80	1	Screw Block
81	1	Grommet
82	1	Belly Pan
83	1	Left Handrail Cover
84	1	Right Handrail Cover
85	1	Left Handrail Outer Cover
86	1	Right Handrail Outer Cover
87	1	Left Inner Handrail Cover
88	1	Right Inner Handrail Cover
89	1	Tray
90	1	Handrail Frame
91	1	Handrail Wire
92	1	Upright Wire
93	1	Left Upright
94	1	Right Upright
95	1	Left Upright Cover
96	1	Right Upright Cover
97	1	Left Base Cover
98	1	Right Base Cover
99	14	Mushroom Fastener
100	4	Base Pad

Key No.	Qty.	Description
101	1	Base
102	1	Large Saddle Bracket
103	2	Wheel
104	1	Upper Display Cover
105	1	Lower Display Cover
106	1	Display
107	1	Display Back Plate
108	1	Small Saddle Bracket
109	1	Pivot Cover
110	1	Large Pivot Cover
111	1	Upper Pivot Cover
112	2	Fan
113	–	(Not Used)
114	–	(Not Used)
115	–	(Not Used)
116	–	(Not Used)
117	1	Pivot Bracket
118	1	Access Cover
119	1	Control Base
120	1	Primary Control
121	1	Key/Clip
122	8	Wire Tie
123	2	Display Ground Wire
124	2	Left Handrail Cover Bracket
125	2	Right Handrail Cover Bracket
126	5	Clip
127	2	1/2" Pin
128	1	Power Switch
129	12	#8 x 5/8" Washer Head Screw
130	4	5/16" Bushing
131	2	3/8" Plastic Washer
132	8	#8 x 5/8" Screw
*	–	User's Manual

Note: Specifications are subject to change without notice. For information about ordering replacement parts, see the back cover of this manual. *These parts are not illustrated.

EXPLODED DRAWING A

Model No. NTL13125.0 R0624B

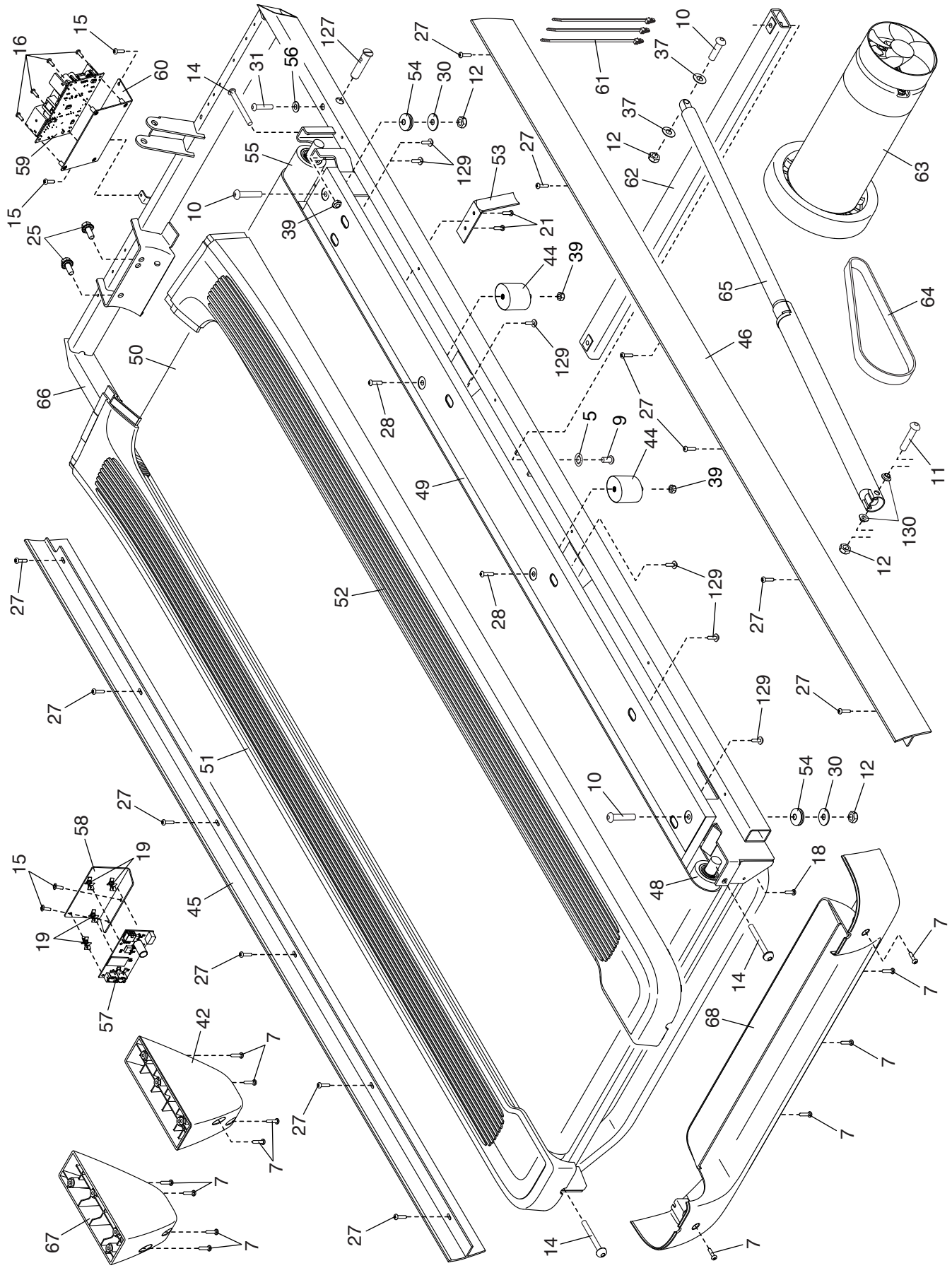

EXPLODED DRAWING B

Model No. NTL13125.0 R0624B

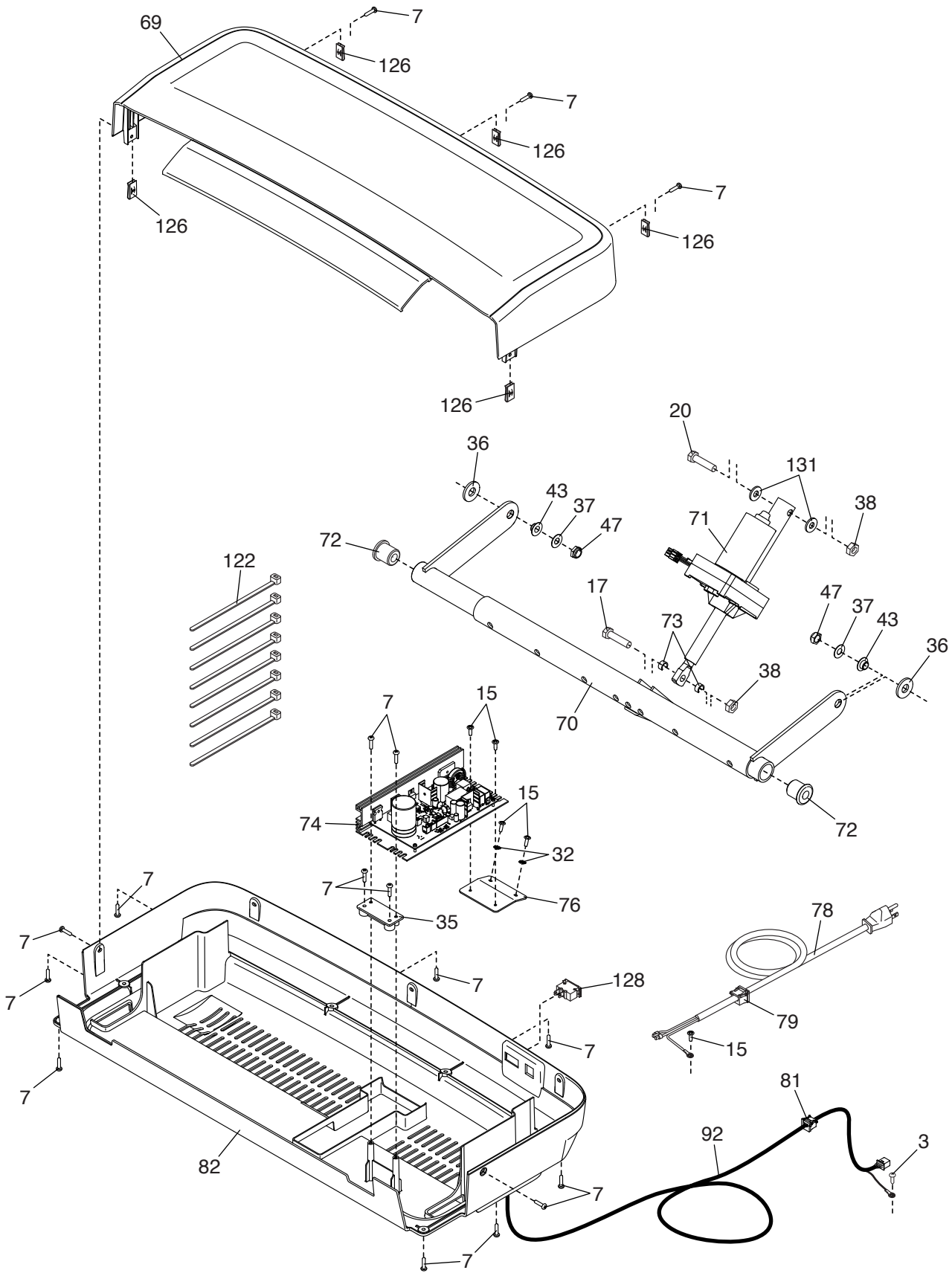

EXPLODED DRAWING C

Model No. NTL13125.0 R0624B

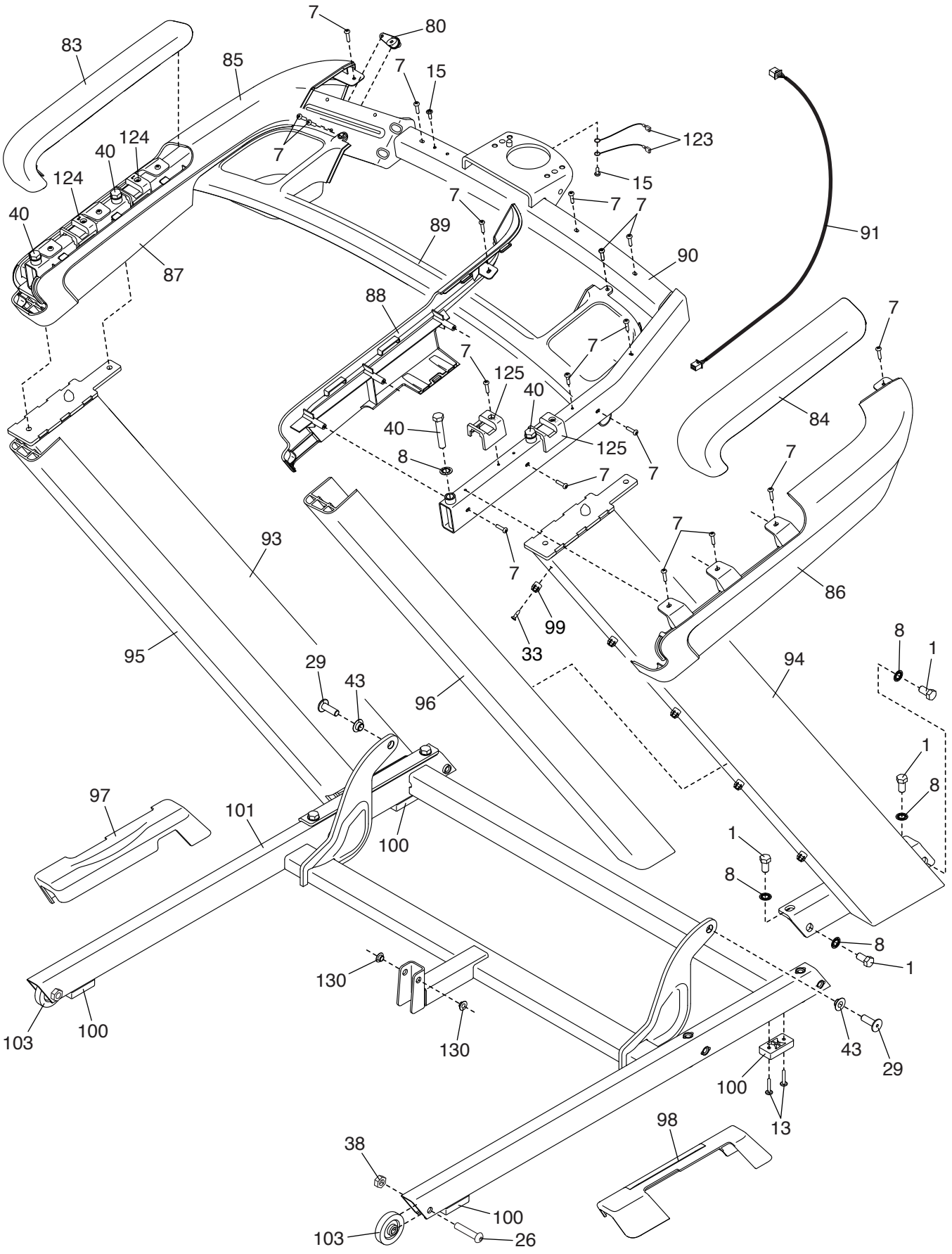

EXPLODED DRAWING D

Model No. NTL13125.0 R0624B

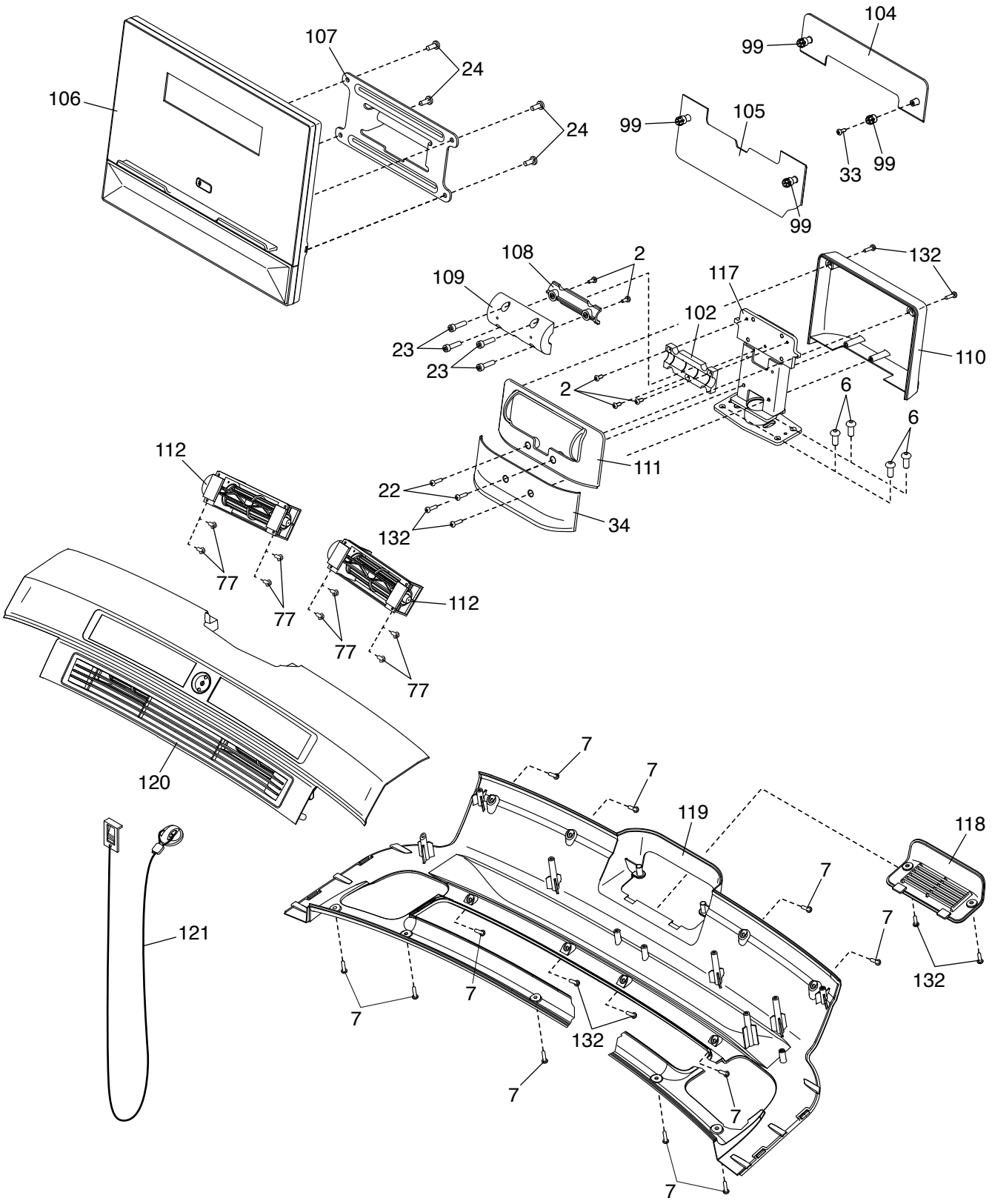

ORDERING REPLACEMENT PARTS

To order replacement parts, please see the front cover of this manual. To help us assist you, be prepared to provide the following information when contacting us:

- the model number and serial number of the product (see the front cover of this manual)
- the name of the product (see the front cover of this manual)
- the key number and description of the replacement part(s) (see the PART LIST and the EXPLODED DRAWING near the end of this manual)

LIMITED WARRANTY

iFIT Inc. (iFIT) warrants this product to be free from defects in workmanship and material, under normal use and service conditions. The frame is warranted for ten (10) years from the date that you receive this product. Parts are warranted for two (2) years. The tablet and labor are warranted for one (1) year.

This warranty extends only to the original purchaser (customer) and is not transferrable. iFIT's obligation under this warranty is limited to repairing or replacing, at iFIT's discretion, the product through one of its authorized service providers. All repairs for which warranty claims are made must be preauthorized by iFIT. If replacement parts are shipped while the product is under warranty, the customer will be responsible for a minimal handling charge. For in-home service, the customer may be responsible for a minimal trip charge. This warranty does not extend to freight damage to the product. This warranty will automatically be voided by the following conditions: (1) if the product is used as a store display model, (2) if the product is purchased or transported outside the USA, (3) if any instruction or warning in this manual is not followed, (4) if the product is abused or improperly or abnormally used, (5) if the product is modified to alter functionality or capability without the written permission of iFIT, or (6) if the product is used for commercial or rental purposes. No other warranty beyond that specifically set forth above is authorized by iFIT.

iFIT is not responsible or liable for the following damages: (1) indirect, special, or consequential damages arising out of or in connection with the use or performance of the product; (2) damages with respect to any economic loss, loss of property, loss of revenues or profits, loss of enjoyment or use, or costs of removal or installation; or (3) other consequential damages of any kind. Some states do not allow the exclusion or limitation of incidental or consequential damages. Accordingly, the above limitation may not apply to the customer.

The warranty extended hereunder is in lieu of any and all other warranties, and any implied warranties of merchantability or fitness for a particular purpose are limited in their scope and duration to the terms set forth herein. Some states do not allow limitations on how long an implied warranty lasts. Accordingly, the above limitation may not apply to the customer. This warranty provides specific legal rights; the customer may have other rights that vary from state to state.

For warranty service, please go to my.iFIT.com. Please be prepared to provide the model number and serial number of the product (see the front cover of this manual).

iFIT Inc., 1500 S. 1000 W., Logan, UT 84321-9813

Part No. 454492 R0624B

Printed in China © 2024 iFIT Inc.