TRINITY

Everything in its place.®

# OWNER'S MANUAL

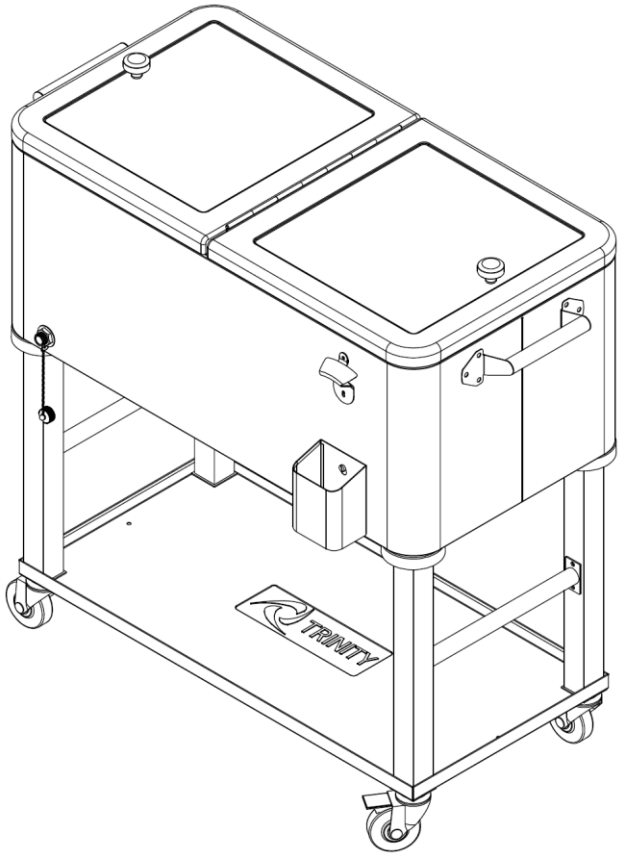


## TRINITY 100 QT DETACHABLE STAINLESS STEEL COOLER W/ SHELF

## Model # TXK-0805

**WARNING! Do not push cooler with cart on uneven surface.**

# PARTS LIST

Your TRINITY Stainless Steel Cooler should include the following parts. Please inspect box contents to ensure you have received all components.

If you are missing any parts, need assistance with assembly or have questions, please contact TRINITY Customer Service: 800.985.5506 or customerservice@trinityii.com. Parts can also be requested online via our "Contact Us" section at www.trinityii.com.

You will need a Phillips screwdriver for assembly.

A

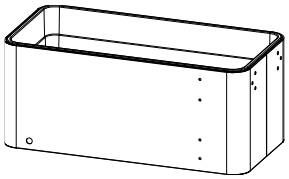

**TUB (1)**

B

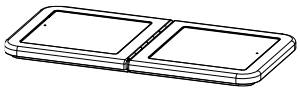

**LID (1)**
**(Knobs screwed to the underside)**

C

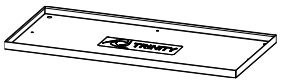


**SHELF (1)**

D

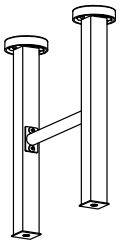

**FRAME (2)**

E

**SMALL SCREW (2)**

F

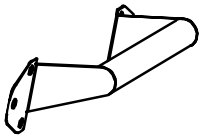

**HANDLE (2)**

G

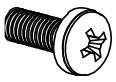

**LARGE SCREW (12)**

H

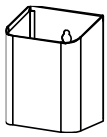

**CAP CATCHER (1)**

I

**BOTTLE OPENER (1)**

J

**DRAIN PLUG (1)**

K

**LOCKING CASTER (2)**

L

**NON-LOCKING CASTER (2)**

M

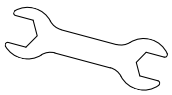

**WRENCH (1)**



© 2015 TRINITY - 800.985.5506

# ASSEMBLY INSTRUCTIONS

## STEP 1

Place FRAMES (D) upside down so that the black circular receivers are on the floor and approximately SHELF (C) width apart.

Align the holes in the SHELF (C) with the bottom of the FRAME (D), making sure that the Shelf Lip is facing downwards.

Screw the LOCKING CASTERS (K) into the bottom of FRAMES (D), securing the SHELF (C) in-between. Please make sure the LOCKING CASTERS (K) are installed on the same side.

Screw the NON-LOCKING CASTERS (L) into the bottom of the FRAME (D), securing the SHELF (C) in-between. Tighten all CASTERS (K, L) with the provided WRENCH (M).

***<u>Use the provided caster wrench to tighten completely. Failure to do as instructed could result in the caster stem breaking.</u>***

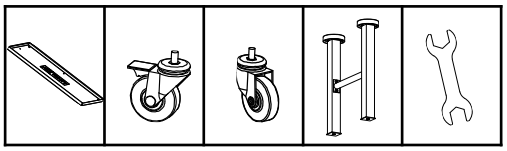

C (1) D (2) K (2) L (2) M (1)

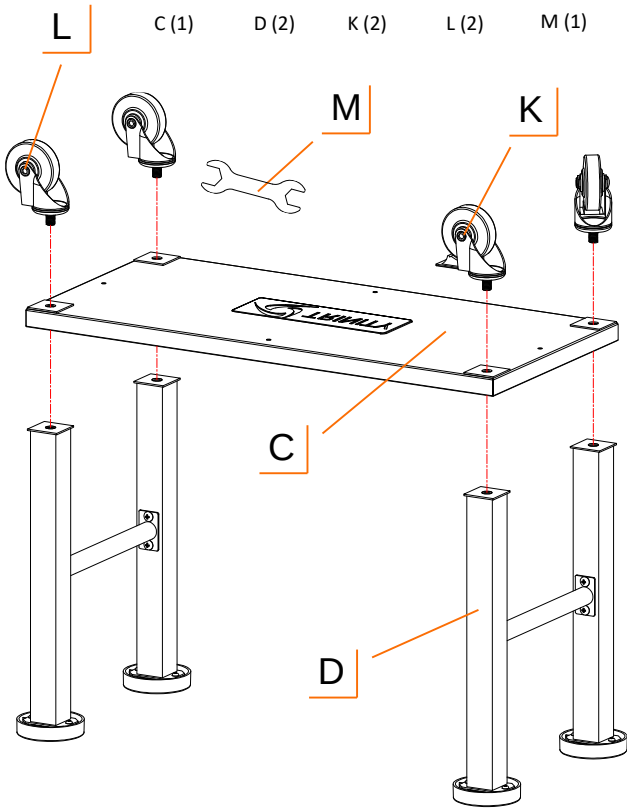


## STEP 2

Align the HANDLES (F) on each side of the TUB (A). Attach HANDLES (F) with the LARGE SCREWS (G. Make sure to tighten securely.

The HANDLES (F) can be attached either angled up or down based on your preference.

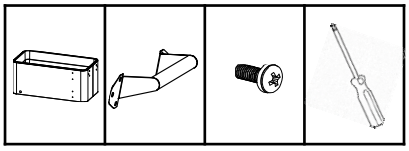

A (1) F (2) G (12) Phillips

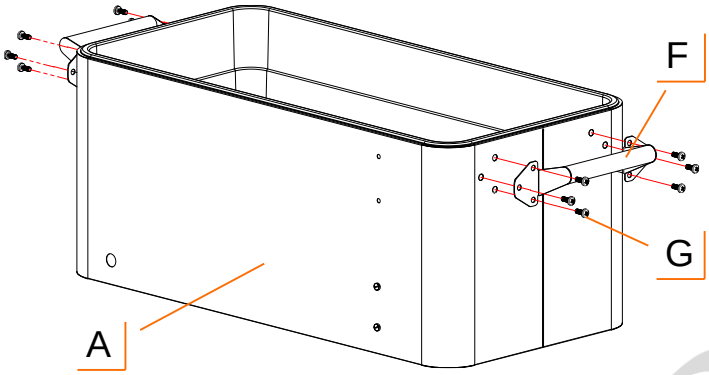


© 2017 TRINITY - 800.985.5506

# ASSEMBLY INSTRUCTIONS

## STEP 3

Attach the CAP CATCHER (H) to the TUB (A) by sliding it downward, over the metal notch. Attach the BOTTLE OPENER (I) to the TUB (A) using SMALL SCREWS (E).

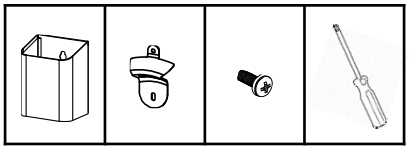

H (1) I (1) E (2) Phillips

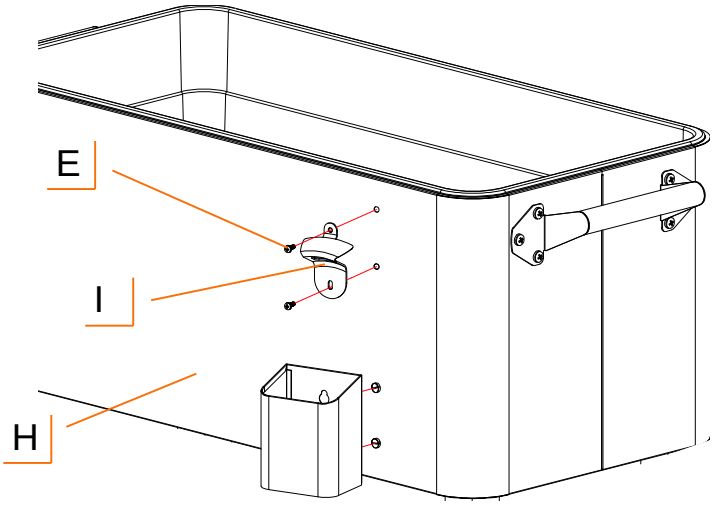


## STEP 4

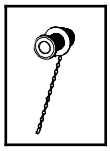

J (1)

Unscrew the DRAIN PLUG (J) assembly. Insert the DRAIN PLUG (J) through the opening in the TUB (A) from the inside. Make sure the rubber seal is on the ***inside*** of the TUB (A).

From the outside, slide the Washer on first, then the second Washer with Chain, and then screw on the Nut. Be sure not to overtighten. Once the DRAIN PLUG (J) is in place, screw on the Cap.

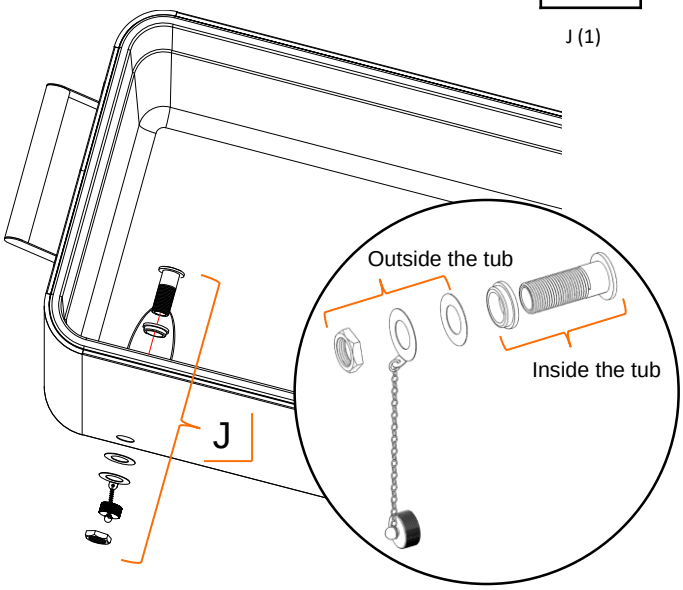




© 2017 TRINITY - 800.985.5506

## STEP 5

Carefully turn Cart right-side up. Set TUB (A) on top of the Cart. Make sure the Tub Feet sit securely inside the Receivers found at the top of the FRAME (D).

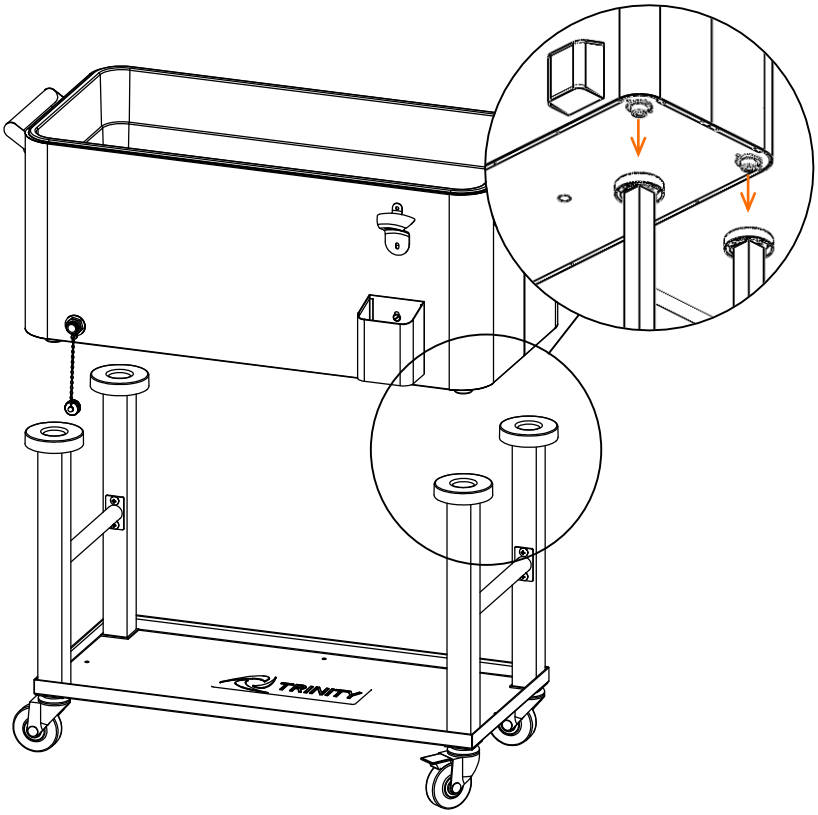


## STEP 6

Unscrew the Cooler Lid Knobs from underneath the LID (B). Re-screw the (2) Lid Knobs to the top of the LID (B) with the same (2) Screws.

Set LID (B) on top of TUB (A).

Clean the inside of the Cooler thoroughly before use.

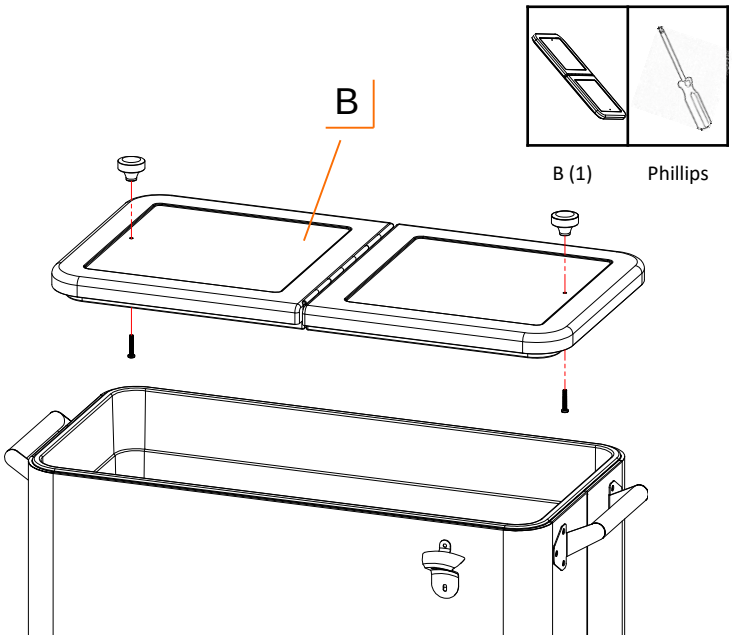

# SERVICE PARTS LIST – TXK-0805

TRINITY Customer Service provides the following replacement parts:

| | Part Number | Description | | Part Number | Description |
|---|---|---|---|---|---|
| 1) | PBR-17-002-3317 | Cooler Lid | 10) | ZSV-99-011-3010 | Non-Locking Caster |
| 2) | AMA-05-005-0150 | Lid Knob | 11) | XXX-97-002-0001 | Wrench |
| 3) | XSV-01-010-0530 | Knob Screw | 12) | PBR-03-028-3116 | Shelf |
| 4) | XST-18-015-3317 | Cooler Tub | 13) | PBR-14-015-1717 | Frame |
| 5) | XST-02-004-0001 | Bottle Opener | 14) | XSV-01-010-0416 | Small Screw |
| 6) | XST-02-005-0002 | Cap Catcher | 15) | CGL-02-003-0001 | Drain Plug |
| 7) | XBK-98-009-4818 | Tub Foot | 16) | XSV-05-001-0675 | Handle |
| 8) | XBK-02-019-0001 | Plastic Receiver | 17) | XSV-01-010-0615 | Large Screw |
| 9) | ZSV-99-012-3010 | Locking Caster | | | |

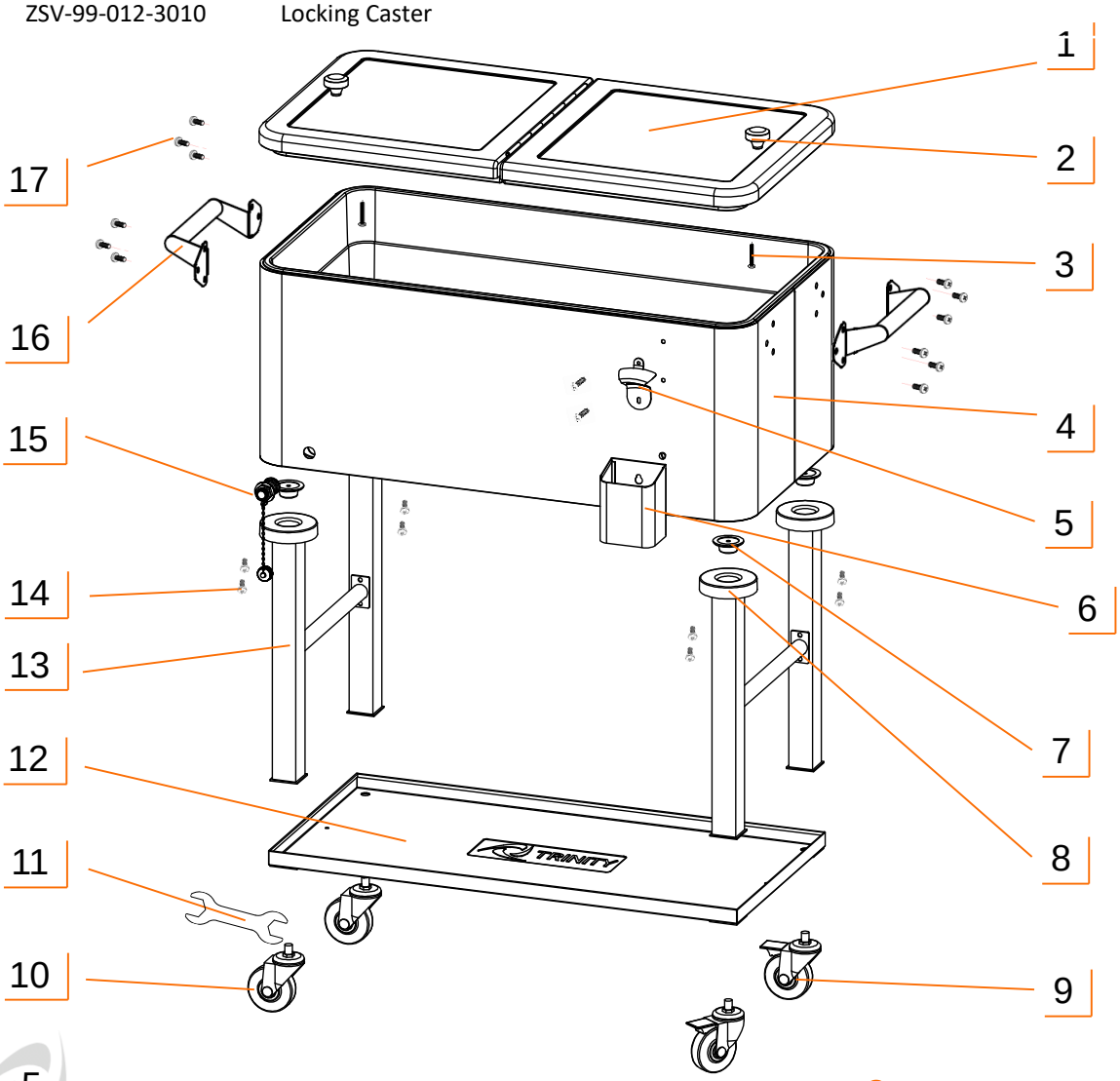




© 2017 TRINITY - 800.985.5506

# WARNINGS

1. **Read and understand all instructions.** Failure to follow all instructions may result in injury and/or damage.
2. **The warnings, cautions, and instructions discussed in this manual cannot cover all possible conditions or situations that may occur.** The user must always be aware of their environment and ensure that they use the product in a safe and responsible manner.
3. **Use the provided caster wrench to tighten completely.** Failure to do as instructed could result in the caster stem breaking thereby causing the cooler to collapse.
4. **Do NOT modify the product in any way.** Unauthorized modification may impair the function and/or safety of the product, and may affect the life of the product.
5. **Check for damaged parts.** Before using this product, carefully check that all parts are in good condition, and that the product will operate properly and perform its intended function. Check for damaged parts and any other conditions that may affect the operation of this product. Replace damaged or worn parts, and never use this product with a damaged part.
6. **Do NOT let children climb or play in the tub.**
7. **Do NOT overload the product.**

| | |
|---|---|
| Volume Capacity | 25 gallons / 100 qt |
| Weight capacity per shelf | 50 lb |
| Total weight capacity | 250 lb |

8. **Lock the casters when leaving cooler in stationary position.**

# CARE AND MAINTENANCE

- Avoid harsh, abrasive cleaners, and other corrosive chemicals.
- Do not use scouring pad for cleaning.
- Keep dry and avoid damp environments.
- Use a quality stainless steel cleaner and follow instructions that come with the cleaner. Wipe ALONG the grain (NOT against).
- Cooler should not be left out unprotected in the elements. A protective Cooler Cover (UBK-24-001-3519) is available as an accessory through www.trinityii.com.

© 2017 TRINITY - 800.985.5506

# PRODUCT REGISTRATION

Thank you for purchasing a TRINITY Stainless Steel Cooler. In order to register your product and receive streamlined customer service, please fill out the following Product Registration Form and (1) fax the form to 310.347.4134 (2) complete the Product Registration Form online at www.trinityii.com or (3) scan and email the form to customerservice@trinityii.com. Include a copy of your original receipt with your submission.

First Name: _____ Last Name: _____

Address: _____

City: _____ State: _____ Zip Code: _____

Email Address: _____ Phone: _____

Product Model #: TXK-0805 Purchase Date: ____ / ____ / ____

Location of Purchase: _____

Please rate the importance of each feature (1=least important; 10=most important)

Quality ____ Price ____ Size/Capacity ____ Appearance ____ Other ____

How did you hear about our product?

☐ Magazine Ad ☐ Catalog ☐ Salesperson ☐ Word of Mouth

☐ Internet ☐ Store Display ☐ Other

Marital Status: ☐ Single ☐ Married

Household Income: ☐ Below $50,000 ☐ $50,000-$150,000 ☐ $150,000+

Education: ☐ High School ☐ College ☐ Graduate School

Primary Residence: ☐ Own ☐ Rent

Comments/Suggestions:

© 2017 TRINITY - 800.985.5506

# 1 YEAR LIMITED WARRANTY

## TRINITY Stainless Steel Cooler
## Model # TXK-0805

Trinity International Industries ("Trinity") warrants to the original consumer purchaser ("Purchaser") of the TRINITY Stainless Steel Cooler ("Product") that each Product shall be free from defects in workmanship and materials for a period of 1 year from the date of original purchase. Trinity's obligation under this warranty shall be limited to repair or replacement of, or adequate compensation for the Product which shall not be greater than the amount of the purchase price of the Product, at the option of Trinity, during the warranty period. All replaced parts and Products become the property of Trinity and must be returned to Trinity.

This warranty excludes normal wear and tear of the Product and its parts or components, and damage arising from any of the following: negligent use or misuse of the Product, use contrary to this User's Manual, or alteration by any one other than Trinity. The warranty period of 1 year shall not be extended or renewed by the repair or replacement of, or compensation for, the Product. Any warranty implied by applicable law is limited in duration to one year from the date of purchase and is subject to the same conditions and limitations as is provided for our express warranty.

Except as set forth herein, and to the extent of applicable there are no warranties on this Product either express or implied, and Trinity disclaims all warranties including, but not limited to, any implied warranties of merchantability, infringement or fitness for a particular purpose. No warranty or guarantee given by any person, firm, or corporation with respect to this product shall be binding on Trinity.

If your Product is defective or otherwise requires service or parts, please call TRINITY Customer Service toll-free at (800) 985-5506, between 8:00 a.m. and 5:00 p.m., PST. Please tell us which model you purchased, the date of the purchase, and the problem with your Product. A copy of your original purchase receipt must accompany your service request.

## LIMITATION OF REMEDIES AND LIABILITY

Trinity (and its employees, officers, members, managers, affiliates an assigns) shall not be liable for any incidental, consequential, special, indirect, remote, special or punitive damages for breach of any warranty, express or implied, including, but not limited to, lost profits, lost savings, loss of anticipated benefits and attorneys' fees, which arise out of the purchase, use or inability to use the Product, whether arising out of contract, negligence, strict tort, product liability, or any other legal theory on which a claim is based. As noted above, to the extent damages are allowed by our express warranty or by applicable law, those damages may not exceed the purchase price paid for the Product. Without limiting the foregoing Purchaser assumes all risk and liability for loss, damage or injury to Purchaser and Purchaser's property and to others and their property arising out of the use, misuse, or inability to use this Product. This limited warranty shall not extend to anyone other than the original purchaser of this product, is nontransferable and states your exclusive remedy.

Some states do not allow the exclusion or limitation of incidental, consequential, special, or punitive damages, so the above limitation or exclusion may not apply to you. The above warranty gives you specific legal rights, and you may have other rights which vary from state to state.

# CONTACT US

**QUESTIONS? NEED PARTS?**
**WE ARE HERE TO HELP!**

**Please feel free to contact us. There are no questions too small, or any problems too big. We're committed to providing our customers with the highest level of service.**


## TRINITY Customer Service

**TEL: 800.985.5506**
**FAX: 310.347.4134**
**EMAIL: customerservice@trinityii.com**


**Monday through Friday**
**8:00 AM – 5:00 PM (PST)**

**www.trinityii.com**