Compact-Pro

Operator's Manual
Manuel de l'utilisateur

GRAVELY

Models

991144 – Compact-Pro 34
(SN 000101 +)

991145 – Compact-Pro 44
(SN 000101 +)

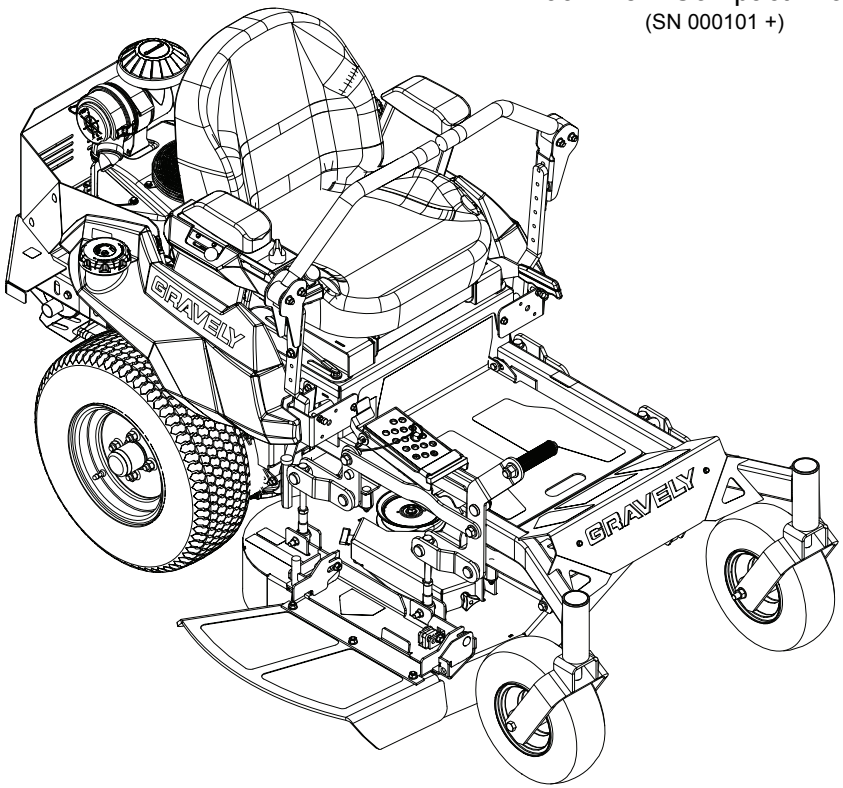

E10 E15 E20 E85

EN ENGLISH

FR FRANÇAIS

05245000A • 4/19
Printed in USA

TABLE OF CONTENTS

WELCOME 1
Register Your Product!. 1
SAFETY. 2
Practices & Laws 2
Emission Control System. 2
Required Operator Training 2
Safety Alert Symbol 2
Signal Words 2
Safety Decals. 3
Safety Rules. 6
CONTROLS AND FEATURES 11
Ignition Key 12
Choke Control Knob. 12
Throttle Control Lever 12
Power-Take-Off (PTO) Knob 12
Hour Meter 12
Height-of-Cut Adjustment System 12
Transport Lock Release Lever. 12
Deck Lift Pedal. 13
Seat Adjustment Lever. 13
Seat Latch 13
Rollover Protection Structure (ROPS) . . 13
Parking Brake Lever 13
Safety Interlock System 13
Steering Levers 13
Transaxle Bypass Levers. 13
Anti-scalp Wheels 14
OPERATION 14
Emergency Stopping 14
Before Operating Unit 14
Start the Engine 14
Operate Unit. 14
Stop the Engine 15
Move Unit Manually 15
Transport Unit 16
Release transport lock 16
MAINTENANCE 16
Service Position 16
Maintenance Schedule 17
Service Parts 17
Hour / Maintenance Meter 17
Check Safety Interlock System 18
Check Parking Brake 18
Check Engine Oil 18
Check Tire Pressure 18
Check Fasteners 18
Lubricate Unit. 18
Check Mower Blades. 18
Battery Service 20
Check Mower Belts 20
Check Hydraulic System 20
SERVICE & ADJUSTMENTS 22
Adjust Seat 22
Adjust Steering Levers. 22
Adjust Unit to Drive Straight. 23
Adjust Transaxles 24
Electrical Service 24
Replace PTO Belt 25
Replace Transaxle Drive Belt 26
Reverse Clutch Brake Plates. 28
Adjust Anti-Scalp Wheels 28
Adjust Parking Brake Lever 28
Remove and Install Mower Deck. 29
Level and Pitch Mower Deck 30
TROUBLESHOOTING 32
STORAGE 34
Short-Term Storage 34
Long-Term Storage 34
Start-of-Season Preparation 34
ACCESSORIES. 34
SPECIFICATIONS. 35
WARRANTY 36

WELCOME

Congratulations on your purchase and welcome to the Gravely family! Every machine in the Gravely lineup is designed for long-lasting and unsurpassed performance. We are confident your machine will be part of your family for many years to come.

Have Questions or Need Assistance?

www.gravely.com

A parts manual for your unit is available for free download or purchase at www.gravely.com.
Manual del operador español está disponible para su descarga gratuita o compra en www.gravely.com.

REGISTER YOUR PRODUCT!

It is extremely important to register your product at time of purchase. Product registration activates the warranty and establishes a communication link from AriensCo.

Locate the model and serial number decal on your unit and register those numbers online at www.gravely.com. See Figure 1 for decal location. Be aware that the original selling dealer may have already completed product registration on behalf of the original purchaser.

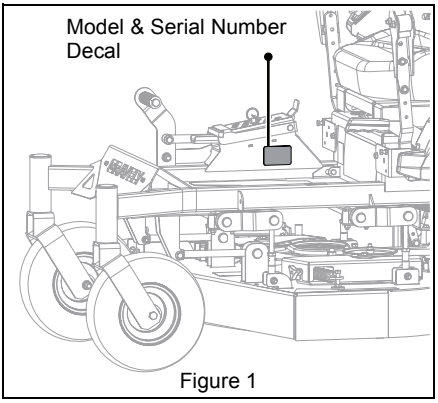

Figure 1

Record model number here.

Record serial number here.

MANUALS

Before operating or servicing the unit, carefully and completely read the manuals provided with the unit. They contain safety instructions and important information about unit controls.

The engine on this unit is covered by a separate manual. Refer to the engine manual for engine service recommendations. Contact the engine manufacturer for a replacement manual if necessary.

Your dealer must review important information in this manual with you before or upon delivery of the unit. It is your responsibility to read and understand all safety precautions and instructions in the manuals. If you do not understand or have difficulty following the instructions, contact your Gravely dealer for assistance. To locate your nearest Gravely dealer, go to www.gravely.com.

DISCLAIMER

Gravely reserves the right to discontinue, make changes to, and add improvements upon its products at any time without public notice or obligation. The descriptions and specifications contained in this manual were in effect at printing. Equipment described in this manual may be optional. Some illustrations may not be applicable to your unit.

© 2019 • AriensCo • Brillion, WI 54110

SAFETY

Read these safety rules and follow them closely. Failure to follow these rules could lead to loss of control of unit, severe personal injury or death to you or bystanders, or result in damage to property or the unit.

PRACTICES & LAWS

Practice usual and customary safe working precautions. Learn applicable rules and laws in your area. ALWAYS follow the practices set forth in this manual.

EMISSION CONTROL SYSTEM

This equipment and/or its engine may include exhaust and evaporative emissions control system components required to meet U.S. Environmental Protection Agency (EPA) and/or California Air Resources Board (CARB) regulations. Tampering with emission controls and components by unauthorized personnel may result in severe fines or penalties. Emission controls and components can only be adjusted by an Gravely dealer or an authorized engine manufacturer's service center. Contact your Gravely Equipment Retailer concerning emission controls and component questions.

REQUIRED OPERATOR TRAINING



Read and understand the Operator's Manual and decals on the unit. This information is for your safety and the proper use of your equipment. Failure to follow these instructions and warnings may cause death or serious injury. If you have purchased this product from a Gravely dealer, the dealer can provide you with training.

Familiarize yourself and any other operators with all controls and the safe use of the features of this unit. If you loan, rent or sell this product to others, provide them with all manuals.

If you have any questions, please call our customer support line at 920-756-4688 or contact us at www.gravely.com. Do not use this equipment if, after reading the Operator's Manual and the on-board decals, you have any questions about the safe use of this product.



WARNING: AVOID INJURY. This cutting machine is capable of amputating body parts and throwing objects. Failure to observe the safety instructions in the manuals and on decals could result in serious injury or death.

ALWAYS disengage blades, stop unit and engine, remove key, set parking brake and allow moving parts to stop before leaving operator's position.

SAFETY ALERT SYMBOL



This is the safety alert symbol. It means:

- **ATTENTION!**
- **YOUR SAFETY IS INVOLVED!**

When you see this symbol:

- **BECOME ALERT!**
- **OBEY THE MESSAGE!**

SIGNAL WORDS

The safety alert symbol above and signal words below are used on decals and in this manual. Read and understand all safety messages.

1. Danger



DANGER: Indicates an IMMINENTLY HAZARDOUS SITUATION! If not avoided, WILL RESULT in death or serious injury.

2. Warning



WARNING: Indicates a POTENTIALLY HAZARDOUS SITUATION! If not avoided, COULD RESULT in death or serious injury.

3. Caution



CAUTION: Indicates a POTENTIALLY HAZARDOUS SITUATION! If not avoided, MAY RESULT in minor or moderate injury. It may also be used to alert against unsafe practices.

4. Notice

NOTICE: Indicates information or procedures that are considered important but not hazard related. If not followed, property damage could result.

5. Important

IMPORTANT: Indicates general reference information worthy of special attention.

SAFETY DECALS

The safety decals on your unit are visual reminders of the important safety information in this manual. All messages on your unit must be fully understood and carefully followed. Safety decals on the unit are explained below.

ALWAYS replace missing or damaged safety decals. Replacement decal information is in the parts manual for your unit. Decals can be ordered from your dealer.

See Figure 2 for safety decal locations.

Safety Decal Locations

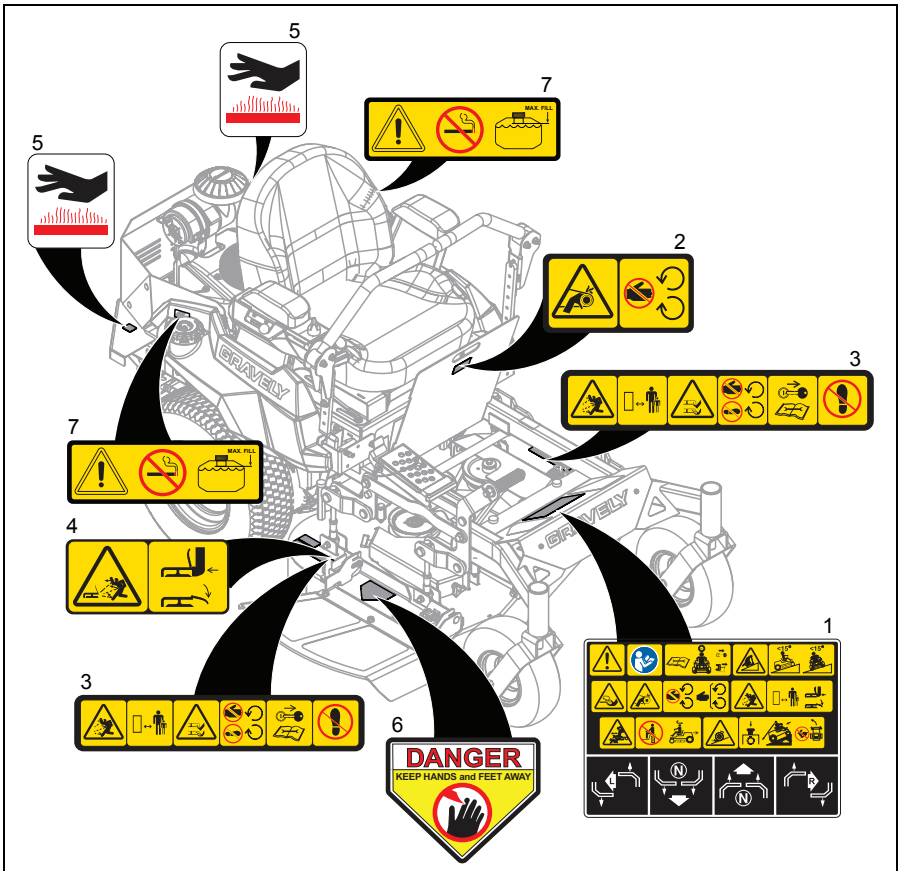

Figure 2

Safety Decal Descriptions

1. DANGER!



DANGER!



Read Operator's Manual.

1.1 Service Hazard



Read Operator's Manual before servicing or making adjustments to unit.



Set parking brake.

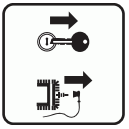

Remove key and disconnect spark plug before servicing or making adjustments to unit.

1.2 Tipping Hazard



Avoid tipping hazard.



DO NOT operate on slopes over 15°.



DO NOT operate on slopes over 15°.

1.3 Amputation Hazard



To avoid amputation hazard, DO NOT put hands near rotating blades.



To avoid amputation hazard, DO NOT put hands near moving belts.



Keep hands away from all rotating or moving parts.



Keep all guards and shields in place.

1.4 Discharge Hazard



NEVER direct discharge toward people, pets or property. Thrown objects can cause injury or damage.



Keep children and others away from unit while unit is in operation.



DO NOT operate mower unless all guards are in operating position or bagger is attached.

1.5 Bystander Hazard



DO NOT operate the unit in the presence of bystanders.



DO NOT carry passengers.



Look behind when operating the unit in reverse.

1.6 Loss of Traction Hazard



If loss of traction is experienced do the following:

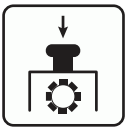

Disengage PTO.



Look before backing. Proceed off slope slowly.



DO NOT try to turn or speed up.

2. DANGER!



Discharge Hazard – NEVER operate unit without discharge chute in operating position. Thrown objects can cause injury or damage.



DO NOT operate mower unless all guards are in operating position or bagger is attached.

3. DANGER!



Discharge Hazard – NEVER direct discharge toward people, pets or property. Thrown objects can cause injury or damage.



Keep children and others away from unit while unit is in operation.



Amputation Hazard – NEVER stick hands or feet under deck or shielded areas.



Keep hands and away from all rotating or moving parts.



Stop engine, remove key, and read manual before servicing or making adjustments to unit.



DO NOT step or stand in this area.

4. DANGER!



Discharge Hazard – NEVER operate unit without discharge chute in operating position. Thrown objects can cause injury or damage.



DO NOT operate mower unless all guards are in operating position or bagger is attached.

5. HOT SURFACES!



DO NOT touch parts which are hot from operation. ALWAYS allow parts to cool.

6. DANGER!



Keep hands and feet away from all rotating or moving parts.

7. WARNING!



Overfilling may cause severe damage to evaporative system.

NEVER fill fuel tank when engine is running, hot, or unit is indoors.

Replace fuel cap securely and clean up spilled fuel.



No smoking.

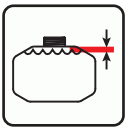

Fill fuel tank to bottom of filler neck – MAXIMUM.

SAFETY RULES

The following safety instructions are based on the B71.4 specifications of the American National Standards Institute and ISO 5395 in effect at the time of production.

Training
Read, understand and follow all instructions on the machine and in the manual(s) before operating this unit.
Keep the area of operation clear of all persons, particularly small children. Be alert and shut off unit if children enter area.
ALWAYS remove key and/or wire from spark plug before assembly, maintenance or service. Unintentional engine start up can cause death or serious injury.
Complete a walk-around inspection of the unit to understand the unit, your work area and all safety decals.
Understand: • How to operate all controls • The functions of all controls • How to STOP in an emergency • Braking and steering characteristics • Turning radius and clearances If the operator or the mechanic cannot read the manual, it is the owner's responsibility to explain it to them.
Only allow responsible adults, who are familiar with the instructions, to operate this machine.
ALWAYS train any inexperienced operators and require them to read and understand all manuals and decals.
Only the user can prevent and is responsible for accidents or injuries occurring to themselves, other people or property.

Operator Age
DO NOT allow children under the age of 18 to operate outdoor power equipment.
Local regulations may restrict the age of the operator.
Data indicates operators above age 60 are involved in a large percentage of riding mower-related injuries. These operators should evaluate their ability to operate the riding mower safely enough to protect themselves and others from serious injury.

Children

Tragic accidents can occur if the operator is not alert to the presence of children.

Children are often attracted to the machine and the mowing activity. NEVER assume that children will remain where you last saw them.

Be alert and turn machine off if a child enters the area.

Before and while backing, look behind and down for small children.

NEVER carry children, even with the blade(s) shut off. They may fall off and be seriously injured or interfere with safe machine operation. Children who have been given rides in the past may suddenly appear in the mowing area for another ride and be run over or backed over by the machine.

NEVER allow children to operate the machine.

Use extreme care when approaching blind corners, shrubs, trees, or other objects that may block your view of a child.

Keep children out of the mowing area and in the watchful care of a responsible adult other than the operator.

Personal Protection

DO NOT wear loose clothing or jewelry and tie back hair that may get caught in rotating parts.

Wear adequate outer garments.

NEVER wear open sandals or canvas shoes during operation. Wear adequate safety gear, protective gloves and footwear.

Wear proper footwear to improve footing on slippery surfaces.

ALWAYS wear eye and ear protection when operating machine.

Before Operation

Keep all nuts and bolts tight to be sure the equipment is in safe working condition.

Maintain the machine to be in compliance with the maintenance schedule.

Clean grass and debris from unit, especially from around muffler and engine, to help prevent fires.

Check parking brake operation frequently. Adjust and service as required.

Inspect unit before each use for missing or damaged decals and shields, correctly operating safety interlock system, and deterioration of grass catchers. Replace or repair as needed.

Ensure Safety Interlock System is functioning properly. DO NOT operate unit if safety interlock is damaged or disabled.

Start and operate unit only when seated in operator's position. Steering control levers must be in neutral, PTO disengaged and parking brake set when starting engine.

NEVER tamper with safety devices. Check their proper operation regularly.

Keep machine free of grass, leaves, or other debris build-up. Clean up oil or fuel spillage and remove any fuel-soaked debris.

Operation

Be sure the area is clear of bystanders before operating. Stop machine if anyone enters the area.

NEVER operate machine in a closed or poorly ventilated area.

ALWAYS maintain unit in safe operating condition. Damaged or worn out muffler can cause fire or explosion.

This product is equipped with an internal combustion type engine. DO NOT use unit on or near any unimproved, forest-covered or brush covered land unless exhaust system is equipped with a spark arrester meeting applicable local, state or federal laws. A spark arrester, if it is used, must be maintained in effective working order by operator.

DO NOT operate machine while feeling tired, ill or under the influence of alcohol or other drugs.

DO NOT put hands or feet near rotating parts or under the machine. Keep clear of the discharge opening at all times.

DO NOT touch parts which are hot. Allow parts to cool.

DO NOT operate machine without the entire grass catcher, discharge guard, or other safety devices in place and working.

ALWAYS keep hands and feet away from all pinch points.

Avoid slippery surfaces. ALWAYS be sure of your footing.

NEVER carry passengers.

NEVER direct discharged material toward anyone. Avoid discharging material against a wall or obstruction. Material may ricochet back toward the operator. Stop the blade(s) when crossing gravel surfaces.

NEVER engage PTO when attachment, including mower blades, is not in use. ALWAYS turn off power to attachment when not in active use such as traveling or crossing driveways.

ALWAYS disengage PTO, stop unit and engine, remove key, engage parking brake and allow moving parts to stop before leaving operator's position.

NEVER engage PTO while raising the attachment, including mower blades, or when attachment is in the raised position.

Keep safety devices or guards in place and functioning properly. NEVER modify or remove safety devices.

DO NOT mow in reverse unless absolutely necessary. ALWAYS look down and behind before and while backing.

Stop engine before removing grass catcher or unclogging chute.

Slow down before turning.

If you strike a foreign object, stop and inspect the machine. Repair, if necessary, before restarting.

NEVER leave a running machine unattended. ALWAYS turn off blade(s), set parking brake, stop engine and remove key before dismounting.

Disengage blade(s) when not mowing. Shut off engine and wait for all parts to come to a complete stop before cleaning the machine, removing the grass catcher, or unclogging the discharge guard.

Operation Conditions

Lightning can cause severe injury or death. If lightning is seen or thunder is heard in the area, do not operate the machine; seek shelter.

ALWAYS check overhead and side clearances carefully before operation.

Watch for traffic when operating near or crossing roadways.

Clear the area of objects such as rocks, wire, toys, etc., which could be thrown by the blades.

Check for weak spots on docks, ramps or floors. Avoid uneven work areas and rough terrain. Stay alert for hidden hazards or traffic.

Use care when approaching blind corners, shrubs, trees or other objects that may obscure vision.

Dust, smoke, fog, etc. can reduce vision and cause an accident.

Operate machine only in daylight or good artificial light.

Slope Operation

Slopes are a major factor related to loss of control and tip-over accidents, which can result in severe injury or death. Operation on all slopes requires extra caution. If you cannot back up the slope or if you feel uneasy on it, DO NOT mow it.

DO NOT operate on slopes of more than 15°.

Mow up and down slopes, not across.

Watch for holes, ruts, bumps, rocks, or other hidden objects. Uneven terrain could overturn the machine. Tall grass can hide obstacles.

DO NOT mow on moist or wet grass. Tires may lose traction causing a loss of control.

Use extra care while operating machine with grass catchers or other attachments; they can affect the stability of the machine. DO NOT use on steep slopes.

Keep all movements on the slope *slow* and *gradual*. DO NOT make sudden changes in speed or direction, which could cause the machine to roll over.

Avoid starting, stopping, or turning on a slope. If the tires lose traction, disengage the blade(s) and proceed slowly straight down the slope.

Operation on slopes may lead to loss of steering control. When operating on slopes be prepared to react to an emergency situation:

- Return steering levers to neutral position.
- Immediately set parking brake.
- Turn off PTO and engine.

DO NOT try to stabilize the machine by putting your foot on the ground.

DO NOT park on slopes unless necessary. When parking on slope, ALWAYS chock or block wheels. ALWAYS set parking brake.

Choose a low ground speed so you will not have to stop or shift while on a slope.
DO NOT operate near drop-offs, ditches, or embankments. Unit can suddenly turn over if a wheel is over the edge of a cliff or ditch, or if an edge caves in.
DO NOT bypass transmission or allow transmission to free-wheel when on a slope.

Fuel
To avoid personal injury or property damage, use extreme care in handling gasoline. Gasoline is extremely flammable and the vapors are explosive.
Ethanol blends must not exceed E10. Higher ethanol content may cause your machine to run hotter and damage your engine.
Replace fuel cap securely and clean up spilled fuel before starting engine.
Extinguish all cigarettes, cigars, pipes, and other sources of ignition.
Use only an approved gasoline container.
NEVER store the machine or fuel container where there is an open flame, spark, or pilot light such as on a water or space heater or other appliances.
NEVER fill containers inside a vehicle or on a truck or trailer bed with a plastic liner. ALWAYS place containers on the ground away from your vehicle before filling.
NEVER fuel the machine indoors.
NEVER remove gas cap or add fuel with the engine running. Allow engine to cool before fueling.
Fuel is highly flammable and its vapors are explosive. Handle with care. Use only an approved gasoline container with an appropriately sized dispensing spout. NO smoking, NO sparks, NO flames.
Remove gas-powered equipment from the trailer and refuel it on the ground. If this is not possible, then refuel such equipment with a portable container, rather than from a gasoline dispenser nozzle.
Keep the nozzle in contact with the rim of the fuel tank or container opening at all times until the fueling is complete. DO NOT use a nozzle lock-open device.
NEVER overfill fuel tank. Replace gas cap and tighten securely.
If fuel is spilled on clothing, change clothing immediately.

Towing/Transporting
Follow the manufacturer's recommendations for weight limits for towed equipment and towing on slopes.
NEVER allow children or others in or on towed equipment.
Tow only with a machine that has a hitch designed for towing. DO NOT attach towed equipment except at the hitch point.
On slopes, the weight of the towed equipment may cause loss of control.
Travel slowly and allow extra distance to stop.

Accessories
Use only attachments recommended by AriensCo that are appropriate to your use and can be used safely in your application.
Follow the manufacturer's recommendation for wheel weights or counterweights
Check grass catcher components and the discharge guard frequently and replace with the manufacturer's recommended parts, when necessary.

Batteries
Avoid Electric Shock. Objects contacting both battery terminals at the same time may result in injury and unit damage. DO NOT reverse battery connections.
Reverse connections may result in sparks which can cause serious injury. ALWAYS connect positive (+) lead of charger to positive (+) terminal, and negative (-) lead to negative (-) terminal.
ALWAYS disconnect negative (-) cable FIRST and positive (+) cable SECOND. ALWAYS connect positive (+) cable FIRST, and negative (-) cable SECOND.
Explosive Gases from battery can cause death or serious injury. Poisonous battery fluid contains sulfuric acid and its contact with skin, eyes or clothing can cause severe chemical burns.
No flames, No sparks, No smoking near battery.
ALWAYS wear safety glasses and protective gear near battery. Use insulated tools.

ALWAYS keep batteries out of reach of children.
Battery posts, terminals and related accessories contain lead and lead compounds, chemicals known to the State of California to cause cancer and reproductive harm. Wash hands after handling.

Rollover Protection Structure (ROPS)
Frequently inspect ROPS and seat belt for damage or loose hardware.
Use extreme care when working close to fences, ditches, or on hills.
Check overhead clearance carefully before driving under any objects.
ALWAYS wear seat belt while operating the unit with the ROPS in the upright position.
Only lower ROPS for transport.
DO NOT wear a seat belt while operating the unit with the center bar in the lowered position.
DO NOT weld, cut, drill or modify ROPS in any manner unless instructed by the manufacturer.

Service
The use of non-genuine replacement parts or accessories could adversely affect machine operation and safety.
Do not change engine governor setting or overspeed the engine.
Maintain or replace safety and instruction labels, as necessary.
Keep unit free of debris. Clean up oil or fuel spills.
Do not change engine governor setting or overspeed the engine.
ALWAYS block wheels and know all jack stands are strong and secure and will hold weight of unit during maintenance.
Release any pneumatic or hydraulic pressure from components slowly.
NEVER attempt to make any adjustments to unit while engine is running (except where specifically recommended). Stop engine, remove key or spark plug wire and wait for all moving parts to stop before servicing or cleaning.
Lower cutting deck unless a positive mechanical lock is used.
Allow engine to cool before servicing.

Moving parts can cut or amputate fingers or a hand. On multiblade mowers, rotation of one blade will cause all blades to rotate.
NEVER weld or straighten mower blades.
NEVER make adjustments or repairs with the engine running.
Mower blades are sharp. Wrap the blade or wear gloves, and use extra caution when servicing them.
ALWAYS keep body and hands away from pin holes or nozzles which eject hydraulic fluid under pressure.
Foreign fluid, such as hydraulic fluid, injected into body can result in gangrene. Fluid must be surgically removed within a few hours by a doctor familiar with this form of injury.

Transporting Unit
Use extra care when loading or unloading the machine into a trailer.
Secure unit chassis to transport vehicle. NEVER secure from rods or linkages that could be damaged.
DO NOT transport machine while engine is running.
ALWAYS turn off power to attachment and shut off fuel when transporting unit.

Storage
NEVER store unit with fuel in fuel tank, inside a building where any ignition sources are present.
Keep machine free of grass, leaves, or other debris build-up. Clean up oil or fuel spillage and remove any fuel-soaked debris. Allow machine to cool before storing.
For extended storage, shut off fuel and clean unit thoroughly. See engine manual for proper storage.

CONTROLS AND FEATURES

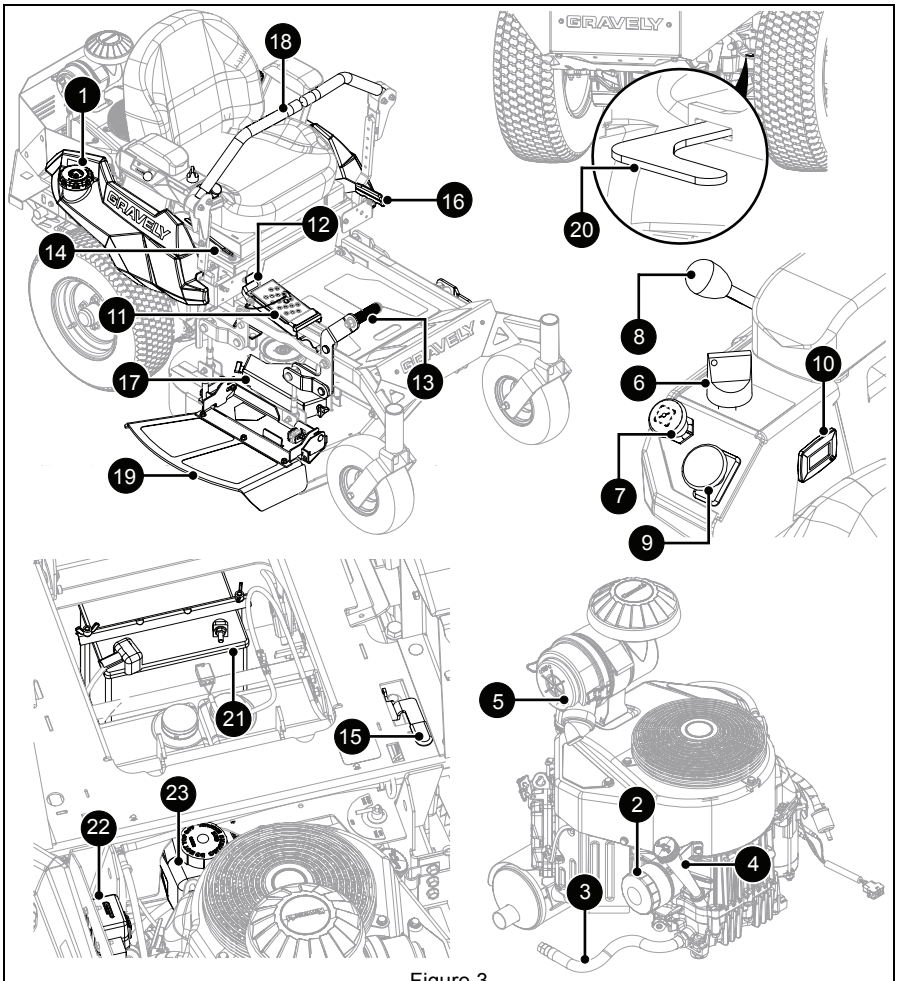

Figure 3

1. Fuel Tank and Cap
2. Oil Filter
3. Oil Drain
4. Engine Oil Dipstick
5. Air Filter
6. Ignition Key
7. Choke Control Knob
8. Throttle Control Lever
9. Power Take-off (PTO) Knob
10. Hour Meter
11. Height-of-Cut Adjustment System
12. Transport Lock Release Lever
13. Deck Lift Pedal
14. Seat Adjustment Lever
15. Seat Latch
16. Parking Brake Lever
17. Belt Cover (2)
18. Steering Lever (2)
19. Discharge Chute
20. Transaxle Bypass Lever (2)
21. Battery (Under Seat)
22. Fuse Box
23. Hydraulic Oil Expansion Tank
24. Anti-Scalp Wheel (5) (Model 991145)

WARNING: AVOID INJURY. Read and understand the *Safety* section before proceeding.

See Figure 3 for all controls and features locations.

IGNITION KEY

See Figure 4.

Controls power to the engine. The key cannot be removed when in run position.

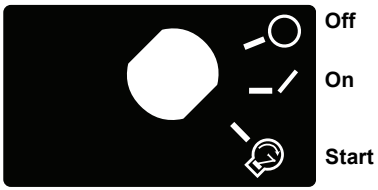

Figure 4

CHOKE CONTROL KNOB

See Figure 5.

Controls airflow to the engine.

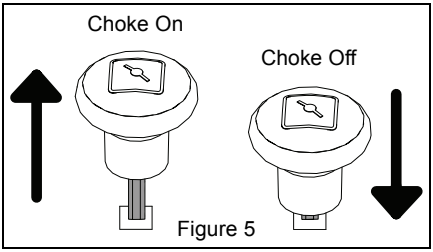

Figure 5

THROTTLE CONTROL LEVER

See Figure 6.

Controls engine speed.

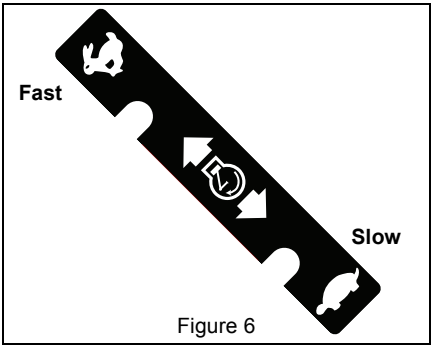

Figure 6

POWER-TAKE-OFF (PTO) KNOB

See Figure 7.

Controls power to mower blades. The engine will not start with the PTO knob in the on position.

WARNING: AVOID INJURY. Blades will not *immediately* stop after pushing PTO knob down to off position.

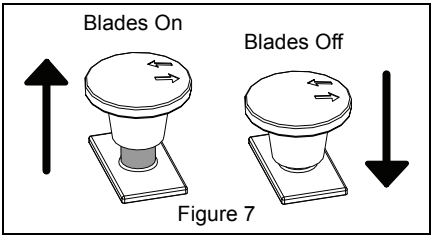

Figure 7

HOUR METER

Displays the amount of time spent on individual jobs, service alerts, and recommended service intervals.

HEIGHT-OF-CUT ADJUSTMENT SYSTEM

Sets the height of cut.

TRANSPORT LOCK RELEASE LEVER

See Figure 8.

Releases deck from transport lock position.

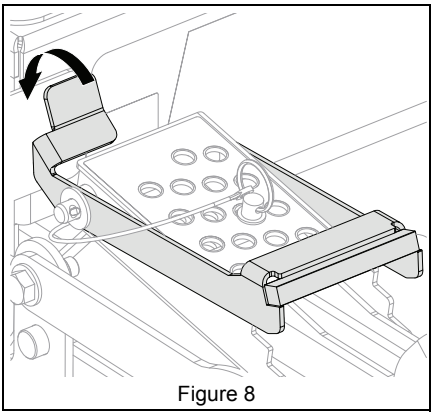

Figure 8

DECK LIFT PEDAL

Raises mower deck to change height-of-cut setting.

SEAT ADJUSTMENT LEVER

Unlocks seat to allow operator to move seat forward or backward and then lock in desired position. See Figure 9.

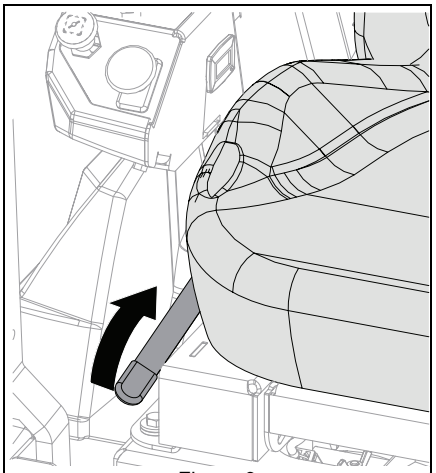

Figure 9

SEAT LATCH

Unlocks seat to allow operator to rotate seat forward for service. See Figure 10.

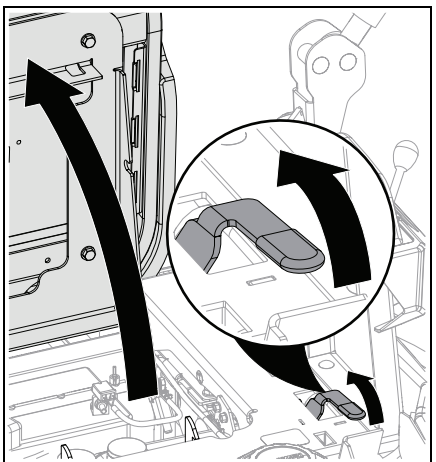

Figure 10

ROLLOVER PROTECTION STRUCTURE (ROPS)

An optional rollover protection structure (ROPS) is available for this unit. See *Accessories* on page 34.

PARKING BRAKE LEVER

See Figure 11.

Controls the parking brake. The engine will not start with brake in the off position.

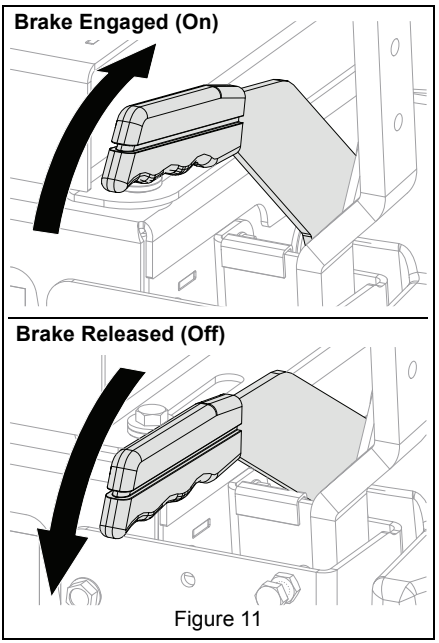

Figure 11

SAFETY INTERLOCK SYSTEM

Monitors the interaction of various unit features for operator safety.

STEERING LEVERS

Control the direction and speed of unit. To stop unit, return both steering levers to neutral.

TRANSAXLE BYPASS LEVERS

Engage and disengage the transaxles so unit may be moved with the engine off.

ANTI-SCALP WHEELS

Model 991145

Help prevent the deck from contacting the ground and scalping the lawn when passing over a high spot.

OPERATION

WARNING: AVOID INJURY. Read and understand the *Safety* section before proceeding.

IMPORTANT: All references to left, right, front or rear are given from the perspective of operator in operator's position, facing the direction of forward travel.

EMERGENCY STOPPING

1. Move steering levers to neutral position.
2. Set parking brake.
3. Push PTO knob down to off position.
4. Turn ignition key to off position and remove key.

BEFORE OPERATING UNIT

IMPORTANT: Register your product! See *Register Your Product!* on page 1.

1. Check fuel level and add fuel if needed.

IMPORTANT: Use fresh unleaded fuel with an octane rating of at least 87. DO NOT use E85 blended fuels; the engine is not E20 / E30 / E85 compatible. The maximum recommended ethanol content is 10%. Gravely recommends using a quality fuel stabilizer in all fuel. See *Short-Term Storage* on page 34.

2. Check engine oil level and add oil if needed. Refer to engine manual.
3. Check condition of air cleaner. Refer to engine manual.
4. Check function of the Safety Interlock System by performing the tests in *Check Safety Interlock System* on page 18. Contact your Gravely dealer for repair if any of the tests fail.
5. Set cutting height. See Figure 12.
   a. Push mower lift pedal forward until transport lock engages.
   b. Insert adjustment pin through desired setting in height-of-cut adjustment system.
   c. Push mower lift pedal slightly forward, release transport lock and slowly release pedal until it contacts adjustment pin and stops.

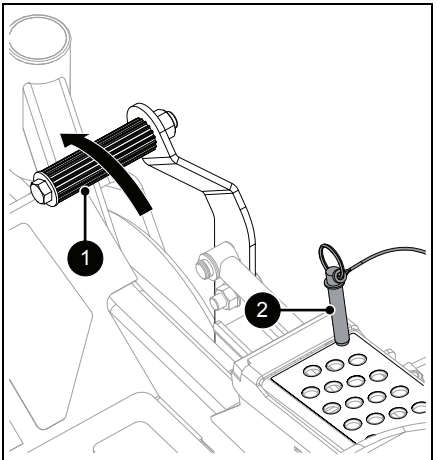

1. Deck Lift Pedal
2. Height-of-Cut Adjustment System

Figure 12

START THE ENGINE

1. Push PTO knob down to off position.
2. Move steering levers to neutral position.
3. Engage parking brake.
4. If engine is cold, pull choke knob up to on position. If engine is warm or hot, turn choke off.
5. Set throttle to slow speed.
6. Insert ignition key and turn to start position. Release key when engine starts.

NOTICE: Do not operate the starter for more than 10 seconds at a time. If the engine does not start, allow a 60-second cool down period between starting attempts.

7. If choke is on, wait a few seconds after engine starts and then push choke knob down to off position.

IMPORTANT: Make sure choke is completely off. Engine will not run smoothly using partial choke.

OPERATE UNIT

1. Release parking brake.
2. Set throttle control lever to fast position.

IMPORTANT: Engaging the PTO knob with the throttle lever set lower than fast position can cause excessive belt wear. ALWAYS use fast position when engaging the PTO.

3. Pull PTO knob up to on position.

IMPORTANT: Never engage the PTO if the mower is plugged with grass or other material. This may cause damage to the electric clutch.

WARNING: AVOID INJURY. Move the steering levers slowly and keep the throttle at slow speed until you learn how to operate the unit.

4. Move steering levers to begin mowing.

Direction of Travel	Lever Position
Forward	Push both levers forward from neutral position. 
Reverse	Pull both levers backward from neutral position. 
Right Turn	Push left lever farther forward than the right lever. 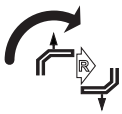
Left Turn	Push right lever farther forward than the left lever. 
Stop	Return both levers to neutral position. 

IMPORTANT: Aggressive turning can scuff or damage lawns. Always keep both wheels rotating when making sharp turns. DO NOT make turns with inside wheel completely stopped. For minimum turning radius, slowly reverse inside wheel while moving outside wheel slowly forward.

For Best Mowing Results

- Cut grass when it is dry.
- Keep mower blades sharp.
- Keep mower deck properly leveled.
- Adjust anti-scalp wheels to prevent scalping.
- Do not set height of cut too low. For very tall grass, mow twice.
- Do not travel too fast.
- Mow with the engine set at full throttle.
- When mulching, only remove 1/3 of grass length per cutting. Do not cut more than 2.5 cm (1") at any one time.
- Discharge clippings into areas already cut.
- Vary cutting pattern with each mowing.
- Do not allow grass or debris to collect inside of mower deck. Clean after each use.

STOP THE ENGINE

WARNING: AVOID INJURY. Wait for all moving parts to stop before leaving operator's position.

1. Place steering levers in neutral position and rotate outward.
2. Engage parking brake.
3. Push PTO knob down to off position.
4. Set throttle to slow speed.
5. Turn ignition key to off position and remove key.

MOVE UNIT MANUALLY

CAUTION: AVOID INJURY. Muffler is hot. DO NOT touch muffler or heat shield.

Bypass the transaxles to move the unit with the engine off.

IMPORTANT: There is one transaxle bypass lever on each side of unit. Ensure that both levers are fully in front or rear position.

1. Stop engine, remove key and wait for moving parts to stop and for hot parts to cool. See *Stop the Engine* on page 15.
2. Pull both transaxle bypass levers out into bypass position. See Figure 13.

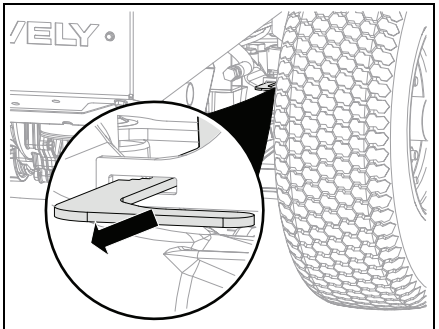

Figure 13

3. Release parking brake and push unit to desired location.
4. Engage parking brake.
5. Return transaxle bypass levers to operating position. See Figure 14.

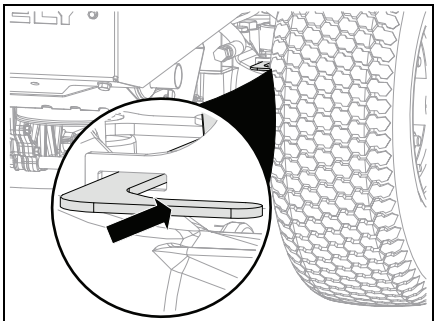

Figure 14

TRANSPORT UNIT

1. Push deck lift pedal completely forward to engage transport lock. Release pedal.
2. Move unit to transport vehicle.
3. Stop engine, engage parking brake, remove key from ignition.
4. Secure mower frame to transport vehicle.

NOTICE: NEVER secure unit to vehicle from rods or linkages that could be damaged.

RELEASE TRANSPORT LOCK

1. Push deck lift pedal forward and lift transport lock release lever.
2. Slowly return mower lift pedal to resting position.

MAINTENANCE

WARNING: AVOID INJURY. Read and understand the *Safety* section before proceeding.

Proper maintenance can prolong the life of unit. The *Maintenance Schedule* on page 17 shows the recommended service schedule.

Your Gravely dealer can provide service and adjustments to keep your unit operating at peak efficiency. Contact an authorized engine manufacturer's service center for engine service.

More frequent service may be required due to working conditions (heavy loads, high ambient temperatures, dusty conditions, or airborne debris).

See the maintenance instructions in the Engine Manual for additional information.

SERVICE POSITION

1. Park unit on a flat, level surface.
2. Stop engine, remove key and wait for moving parts to stop and for hot parts to cool.
3. Engage parking brake.
4. Chock wheels. Strap and clamp unit onto lift, if used.
5. Place steering levers in neutral position and rotate outward.
6. Pull seat latch and rotate seat forward. See Figure 15.

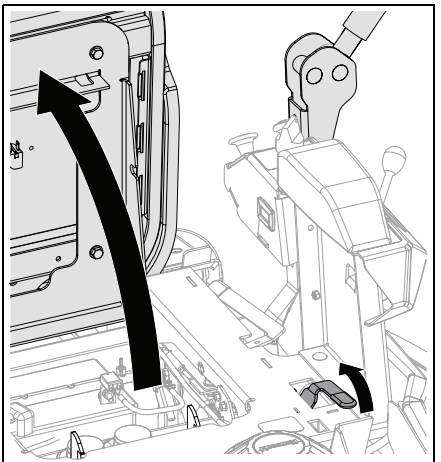

Figure 15

MAINTENANCE SCHEDULE

Service Performed	Each Use	Every 25 hrs.	Every 50 hrs.	Every 100 hrs.	Every 400 hrs.
Check Safety Interlock System	•				
Check Hydraulic System	•				
Check Parking Brake	•				
Check Engine Oil *	•				
Change Engine Oil *					
Check Tire Pressure	•				
Check Mower Blades	•				
Check Battery		•			
Clean Battery		•			
Check Air Filter *			•		
Check Fasteners			•		
Lubricate Unit			•		
Clean Engine Cooling System*				•	
Check Belts				•	
Change Hydraulic Oil and Filter **					•

* Refer to engine manual for instructions.

**Change after first 75 hours of operation.

SERVICE PARTS

See your Gravely dealer to purchase service parts for your unit.

Description	Qty.	Part No.
Transaxle Drive Belt	1	07200726
PTO Belt – 34"	1	07200809
PTO Belt – 44"	1	07200808
Mower Blade – 34"	2	00450300
Mower Blade – 44"	3	00450200
Hydraulic Oil – 32 oz (1 Qt.)	AR	00057100
Hydraulic Oil Filter	1	21548100
Fuel Filter	1	21548101
Engine Oil Filter	1	21535800
Air Filter	1	21548200
Muffler Gasket	1	00191627
Fuel Stabilizer – 118 ml (4 oz.)	AR	
• Except Canada		04730400
• For Canada only		04742500

HOUR / MAINTENANCE METER

Hour Meter-only Models

Hour meter measures engine runtime and cannot be reset.

Maintenance Models

See Figure 16.

When the key is in the on position, the Timer mode displays. Press the Mode button to toggle between different modes.

Timer: Measures engine runtime until reset. To reset the timer, press the Mode button to select TMR1 mode and then hold Mode button for 3 seconds.

IMPORTANT: Turn ignition key to the off position when unit is not in use. Some meters may count hours when the key is in the on position, even if the engine is off. This results in inaccurate maintenance intervals.

Service Alerts: Counts down hours until service is needed and displays "Now" when service is due. Service time is measured for:

- Engine oil and filter changes (CHG OIL)
- Hydraulic oil and filter changes (CHG H OIL)
- Air filter service (SVC AIRFILTER)

The service intervals preset into the hour meter are:

- Hydraulic oil and filter: First 75 hours and every 400 hours thereafter
- Engine oil and filter: First 25 hours and every 100 hours thereafter
- Air filter: Every 100 hours

NOTICE: The preset engine oil services intervals are normal recommended intervals. Specific engine manufacturer's recommendations may vary.

To clear a service message, press the mode button to select service alert mode and then hold the mode button for 3 seconds.

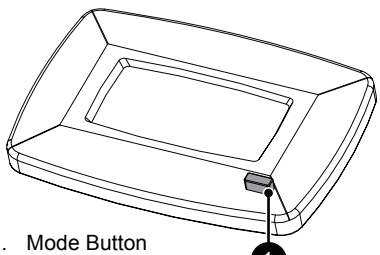

1. Mode Button

Figure 16

CHECK SAFETY INTERLOCK SYSTEM

Check function of the Safety Interlock System by performing the tests below. Contact your Gravely dealer for repair if any of the tests fail.

Test	Steering Levers	PTO	Parking Brake	Result
Starting Interlock				
1	Neutral	Off	On	Engine starts.
2	Forward, Neutral, Reverse	On	On or Off	Engine does not start.
3	Forward, Neutral, Reverse	On or Off	Off	Engine does not start.
Operating Interlock (Engine On)				
4 *	Forward, Neutral, Reverse	On	On or Off	Engine shuts off.
5 *	Forward, Neutral, Reverse	On or Off	Off	Engine shuts off.
* When operator lifts off seat.				

CHECK PARKING BRAKE

1. Park unit on a flat, level surface.
2. Position steering levers in neutral.
3. Engage parking brake.
4. Stop engine and wait for moving parts to stop and for hot parts to cool.
5. Bypass transaxles. See *Move Unit Manually* on page 15.
6. Push unit forward.
   - If unit does not move forward, no adjustment is needed.
   - If unit moves forward easily, adjust the brake lever.

CHECK ENGINE OIL

NOTICE: Engine oil level must be maintained at correct level or engine damage may occur. Refer to engine manual.

CHECK TIRE PRESSURE

See *Specifications* on page 35 for recommended tire pressure.

WARNING: AVOID INJURY. Explosive separation of tire and rim parts is possible.

- DO NOT inflate tires above the recommended pressure.
- DO NOT inflate tires with a compressor; use a hand pump.
- DO NOT stand in front of tire assembly when inflating. Use a clip-on chuck and extension hose long enough to allow you to stand to one side.
- DO NOT mount a tire without proper equipment and experience.

CHECK FASTENERS

Check for loose or missing hardware.

LUBRICATE UNIT

1. Apply oil to all pivot points and pin connections.

CHECK MOWER BLADES

Check blades for wear. Replace or sharpen as needed.

CAUTION: AVOID INJURY. Use sturdy gloves or padding to protect hands when working with mower blades.

Rotation of one blade rotates the other blades.

Remove Blades

1. Stop engine, remove key and wait for moving parts to stop and for hot parts to cool.
2. Disconnect spark plug wires.
3. Remove hardware securing blades to spindles and remove blades. Retain all hardware for reinstallation. See Figure 17.

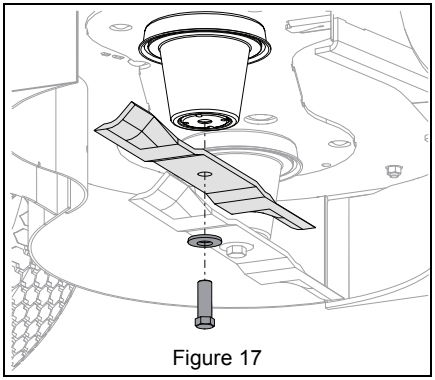

Figure 17

Sharpen Blades

CAUTION: DO NOT sharpen blades while attached to unit.

1. Remove blades. Discard blades if:
   - More than 1.3 cm (1/2") of metal is removed.
   - Air lifts are eroded.
   - Blades are bent or broken.
2. File or grind an equal amount of material from each cutting edge of the blade until sharp. DO NOT change angle of cutting edge or round the corner of the blade. See Figure 18.

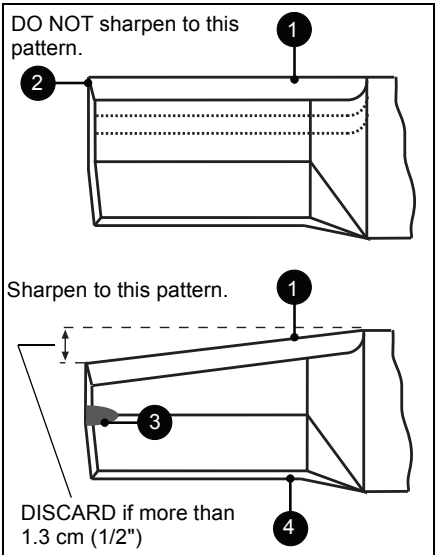

1. Cutting Edge
2. Square Corner
3. Air Lift Erosion
4. Air Lift

Figure 18

CAUTION: Unbalanced blades cause excessive vibration and eventual damage to unit. Balance blades before reinstalling on unit.

NEVER weld or straighten blades.

3. Check blade balance by sliding blade on an unthreaded bolt. If blade does not remain horizontal, sharpen the heavy end until blade is balanced.

Install Blades

See Figure 17.

1. Reinstall blades and secure with original hardware. Torque to 156 N•m – 217 N•m (115 lb-ft – 160 lb-ft).

BATTERY SERVICE

WARNING: Battery posts, terminals and related accessories contain lead and lead compounds, chemicals known to the State of California to cause cancer and reproductive harm. Wash hands after handling.

Remove Battery

1. Place unit in service position. See *Service Position* on page 16.
2. Disconnect the negative cable and then the positive cable from the battery.

See Figure 19.

3. Remove and retain hardware securing hold-down bracket to battery.
4. Remove battery.

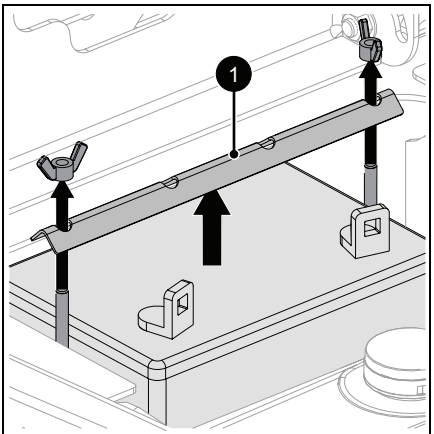

1. Hold-Down Bracket

Figure 19

Clean Battery

1. Clean terminals and battery cable ends with a wire brush.
2. Coat terminals with dielectric grease or petroleum jelly.

Install Battery

CAUTION: DO NOT allow direct metal contact across battery posts.

1. Reinstall battery.
2. Reinstall positive cable and then the negative cable.
3. Reinstall hold-down bracket using original hardware.
4. Return seat to operating position.

Charge Battery

Check battery with a voltmeter. If battery is less than 11 volts, charge battery.

NOTICE: DO NOT fast charge. Charging at a higher rate damages or destroys the battery. ONLY use an automatic charger designed for use with your battery.

NOTICE: Always follow information provided on battery by battery manufacturer. Contact battery manufacturer for detailed information about charging.

1. Remove battery from unit. See *Remove Battery* on page 20.
2. Place battery on bench or other well-ventilated area.
3. Connect positive lead of charger to positive battery terminal.
4. Connect negative lead of charger to negative battery terminal.
5. Charge battery following battery manufacturer's instructions.
6. Reinstall battery. See *Install Battery* on page 20.

Jump Starting

Gravely does not recommend jump starting your unit. Jump-starting can damage engine and system components. Refer to engine manual for details.

CHECK MOWER BELTS

Check belts for wear and replace as needed.

CHECK HYDRAULIC SYSTEM

Check Hydraulic Oil Level

1. Place unit in service position. See *Service Position* on page 16.

See Figure 20.

2. Check oil level in expansion tanks. Oil should reach the cold fill indicator mark.

IMPORTANT: Cold fill indicator mark is blocked by engine. Locate additional indicator marks on sides of tank. Engine should be cold when checking initial oil level.

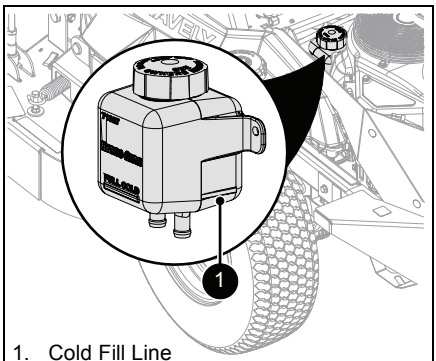

1. Cold Fill Line

Figure 20

3. Operate engine for 1 minute and recheck oil levels.
4. Add hydraulic oil, if needed.
   a. Remove expansion tank caps.
   b. Fill expansion tanks with 15W-50 synthetic motor oil (Gravely p/n 00057100) or equivalentuntil oil reaches the cold fill indicator mark.
   c. Reinstall expansion tank caps.

Change Hydraulic Oil and Filter

1. Operate unit for a few minutes to warm hydraulic oil.
2. Stop engine, remove key and wait for all moving parts to stop and for hot parts to cool.
3. Position container under oil filter to catch used oil.

See Figure 21.

4. Remove filter guard and oil filter from transaxle.
5. Remove the vent / fill plug from the fill port and allow transaxle to drain completely.

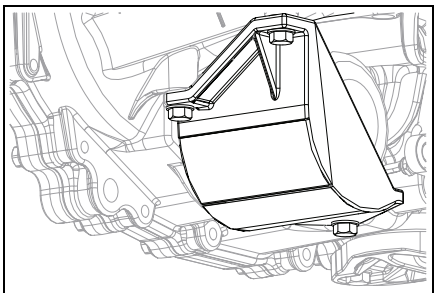

Figure 21

6. Wipe filter-mounting surface clean.
7. Lubricate rubber gasket on new oil filter with clean hydraulic oil.
8. Spin filter onto filter housing until it makes contact, and then turn filter 3/4 turn to tighten.
9. Reinstall filter guard and torque to 7.3 N•m (65 lb-in). DO NOT overtighten.
10. Add 15W-50 synthetic motor oil (Gravely p/n 00057100) or equivalentuntil oil appears at the bottom of the fill port (1892.7 mL (64 fl. ounces) per transaxle).
11. Reinstall the vent / fill plug and torque to 20.3 N•m (180 lb-in).
12. Add hydraulic oil to expansion tank until oil reaches cold fill indicator mark.
13. Repeat steps 3 – 12 for other transaxle.
14. Purge hydraulic system. See *Purge Hydraulic System* on page 21.

Purge Hydraulic System

Purge air from hydraulic system after draining oil or changing the filter.

WARNING: AVOID INJURY. This adjustment requires operating the engine. Use extreme care to avoid contact with moving parts and hot surfaces. Be sure rear of unit is well supported and secure before starting engine.

1. Park unit facing a wall or chock wheels.
2. Release parking brake.
3. Support unit so drive wheels are off the ground.
4. Bypass transaxles. See *Move Unit Manually* on page 15.
5. Start the engine and slowly move steering levers forward and backward 5 or 6 times.
6. Stop engine.
7. Return transaxle bypass levers to operating position. See *Move Unit Manually* on page 15.
8. Start engine.
9. Slowly move steering levers forward and backward 5 or 6 times.
10. Stop engine, lower unit to ground and check oil level. Add oil if needed.
11. Repeat steps 1 – 10 until transaxles operate smoothly in forward and reverse at normal speed without excessive noise.

SERVICE & ADJUSTMENTS

WARNING: AVOID INJURY. Read and understand the *Safety* section before proceeding.

ADJUST SEAT

See Figure 22.

1. Pull seat adjustment lever up to unlock seat.
2. Move seat to desired position.
3. Release seat adjustment lever to lock seat in place.

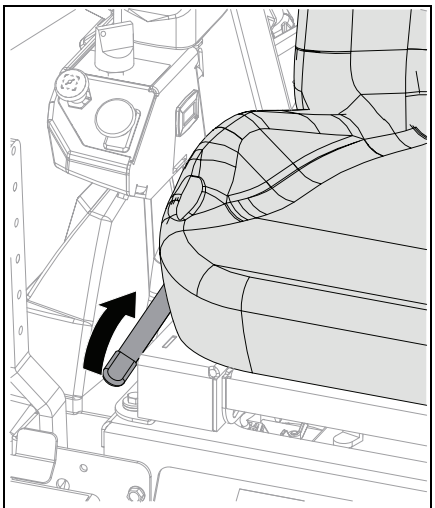

Figure 22

ADJUST STEERING LEVERS

Adjust Height

The steering lever height may be adjusted for operator comfort.

See Figure 23.

1. Stop engine, remove key and wait for moving parts to stop and for hot parts to cool.
2. Remove mounting screws and steering lever from lower control arm.
3. Position steering lever at desired height and align with lower control arm. Secure with original hardware.

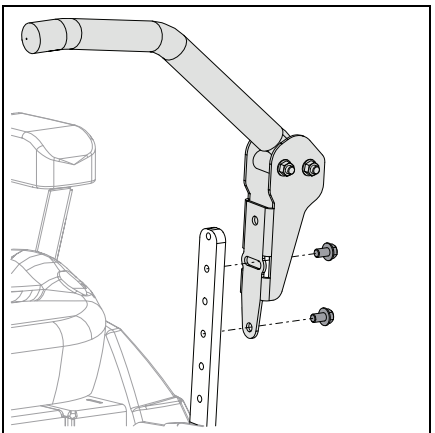

Figure 23

4. Adjust steering lever position. See *Adjust Steering Levers* on page 22.
5. Turn eccentric spacer so levers are at the same height and have a 1.3 cm – 2.5 cm (1/2" – 1") gap between lever ends. See Figure 24.

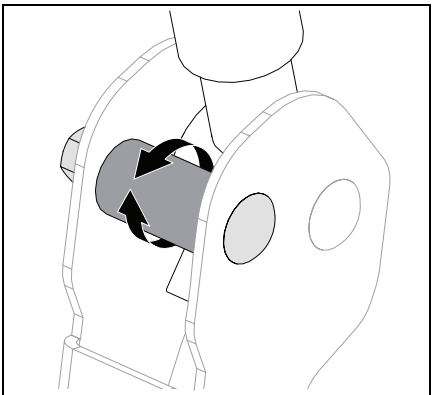

Figure 24

If there is more than 3.2 mm (1/8") between the horizontal alignment of the steering levers, align the levers.

6. Stop engine, remove key and wait for moving parts to stop and for hot parts to cool.
7. Engage parking brake.
8. Loosen mounting screws, align levers and tighten screws. See Figure 25.

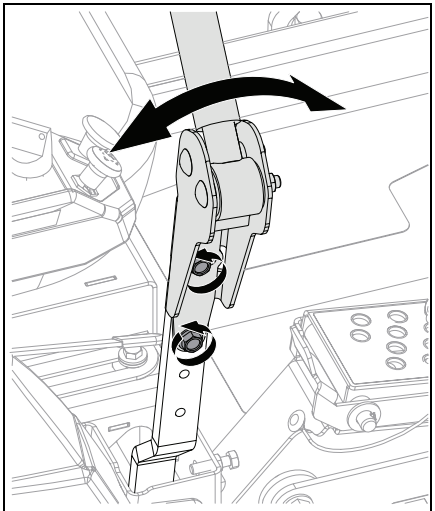

Figure 25

Adjust Forward Position

The steering lever forward position may be adjusted for operator comfort.

1. Stop engine, remove key and wait for moving parts to stop and for hot parts to cool.
2. Loosen mounting hardware on steering lever assemblies.
3. Place steering levers in desired position:
   - Gently push levers forward for greater distance from operator.
   - Gently pull levers back for closer distance to operator.
4. Tighten hardware.

ADJUST UNIT TO DRIVE STRAIGHT

NOTICE: Reverse travel can only be adjusted by your Gravely dealer.

Adjust Tire Pressure

1. Place unit in service position. See *Service Position* on page 16.
2. Check tire pressures. If needed, adjust to recommended pressures. See *Specifications* on page 35.
3. Check tracking.
   - If unit does not track straight, increase tire pressure to the drive wheel of the side it moves toward.

IMPORTANT: DO NOT exceed maximum tire pressure listed on tire sidewall.

   - If increasing tire pressure does not correct tracking, adjust the limiter bolts as directed below.
4. Align steering levers. See *Adjust Steering Levers* on page 22.

Adjust Limiter Bolts

See Figure 26.

Limiter bolts can be adjusted to increase or decrease drive wheel speeds. To adjust:

1. Loosen jam nut.
   - Turn limiter bolt counterclockwise to increase maximum drive wheel speed on that side.
   - Turn limiter bolt clockwise to reduce maximum drive wheel speed on that side.
2. Tighten jam nut.

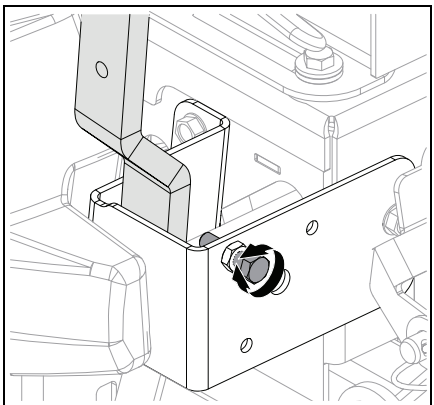

Figure 26

ADJUST TRANSAXLES

Check For Excessive Creep

WARNING: AVOID INJURY. This adjustment requires operating the engine. Use extreme care to avoid contact with moving parts and hot surfaces. Be sure rear of unit is well supported and secure before starting engine.

1. Operate unit for a minimum of 5 minutes to warm hydraulic system.
2. Stop engine and engage parking brake.
3. Chock front wheels and support unit so both drive wheels are off the ground.
4. Remove drive wheels.
5. Start engine, move throttle lever to fast position and release parking brake.
6. Move steering levers forward and backward 5 or 6 times and then return levers to neutral position.
7. Check hubs for rotation.
   - If there is only slight rotation, stop engine, reinstall wheels and lower unit to ground.
   - If there is excessive rotation, adjust neutral position as directed below.

IMPORTANT: Torque wheel lug nuts to 81.3 N•m – 122.0 N•m (60 lb-ft – 90 lb-ft).

Adjust Neutral Position

If wheel hub has excessive rotation after checking for excessive creep, adjust neutral position.

1. Loosen the return-to-neutral screw on the transaxle. See Figure 27.

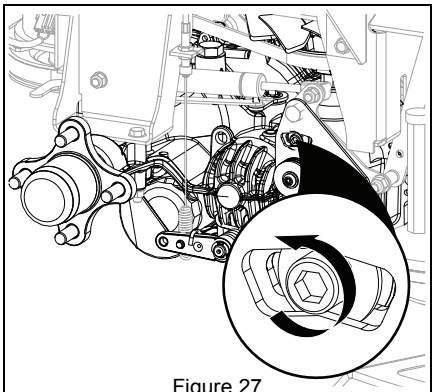

Figure 27

2. Slowly turn transaxle control arm in the opposite direction of hub rotation until hub stops. See Figure 28.

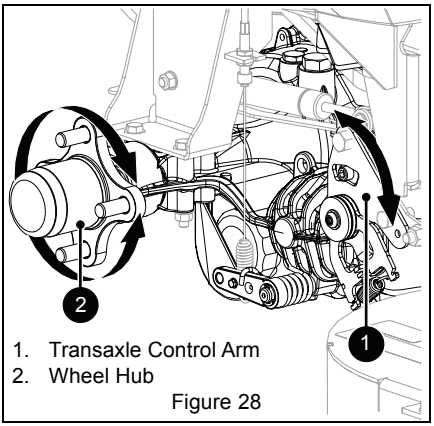

1. Transaxle Control Arm
2. Wheel Hub

Figure 28

3. Hold the transaxle control arm in position and tighten the return-to-neutral screw.
4. Start engine, move throttle lever to fast position and release parking brake.
5. Move steering levers forward and backward 5 or 6 times and then return levers to neutral position.
6. Check wheel hubs for rotation.
   - If there is only slight rotation, stop engine, reinstall wheels, return unit to operating position and advance to *Adjust Parking Brake Lever* on page 28.
   - If there is excessive rotation, repeat steps 1 – 6.

IMPORTANT: Torque wheel lug nuts to 81.3 N•m – 122.0 N•m (60 lb-ft – 90 lb-ft).

ELECTRICAL SERVICE

See Figure 29.

Replace Fuse

NOTICE: To avoid damaging the circuit, replace fuses with fuses of the same amperage rating. Determine the cause of electrical failure and repair before replacing failed electrical components.

1. Place unit in service position. See *Service Position* on page 16.
2. Remove defective fuse.
3. Determine cause of fuse failure and repair condition.
4. Install new fuse.

Replace Relay

NOTICE: Relays are interchangeable. Use only quality replacement parts. See *Service Parts* on page 17.

1. Place unit in service position. See *Service Position* on page 16.
2. Remove defective relay.
3. Determine cause of relay failure and repair condition.
4. Install new relay.

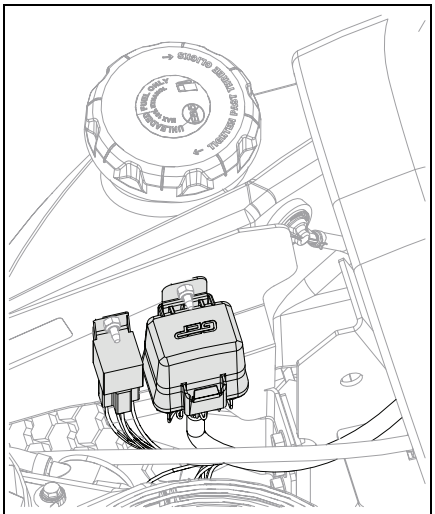

Figure 29

REPLACE PTO BELT

CAUTION: Damage or worn belts may result in injury and / or damage to the unit. Check belts for excessive wear or cracks often.

1. Place unit in service position. See *Service Position* on page 16.
2. Position mower deck at lowest cutting height.

See Figure 30.

3. Loosen wing knobs securing belt covers to deck and remove belt covers.
4. Lift foot plate to access deck center.

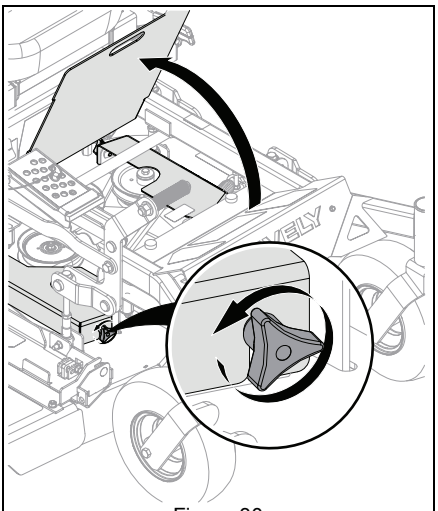

Figure 30

Remove PTO Belt

CAUTION: Use care when releasing idler spring tension. Keep body parts away from idlers when performing this operation.

See Figure 31.

1. Slowly remove spring hook from anchor bolt to release tension from belt idler.
2. Remove PTO belt.

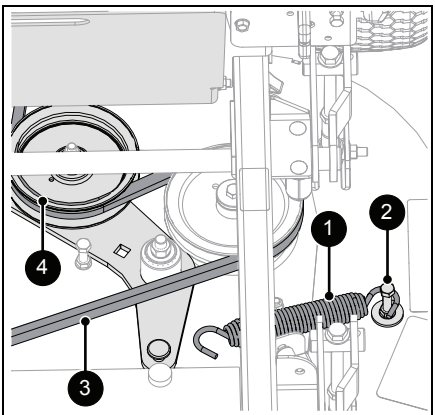

1. Spring
2. Anchor Bolt
3. PTO Belt
4. PTO Belt Idler

Figure 31

Install PTO Belt

See Figures 32 and 33.

1. Install PTO belt in the following order:
   a. Around split pulleys.
   b. Around idler pulleys at deck center.

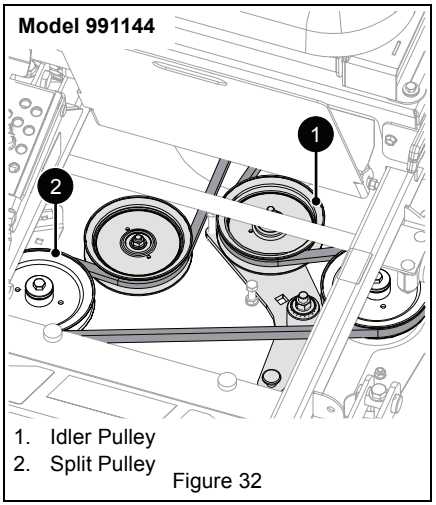

1. Idler Pulley
2. Split Pulley

Figure 32

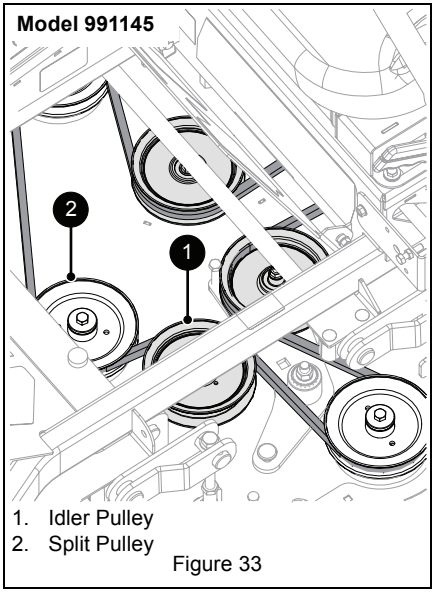

1. Idler Pulley
2. Split Pulley

Figure 33

2. Reinstall idler spring hook around anchor bolt to apply tension to belt. See Figure 34.

IMPORTANT: Make sure belt has tension and is aligned in all pulleys.

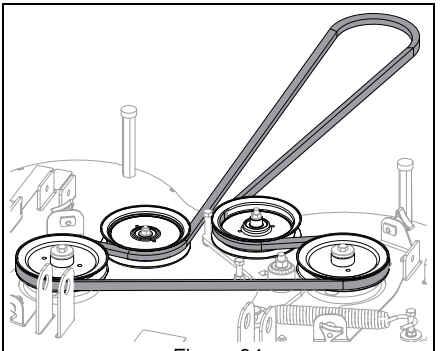

Figure 34

3. Reinstall belt covers and tighten wing knobs.

REPLACE TRANSAXLE DRIVE BELT

Remove Transaxle Drive Belt

1. Place unit in service position. See *Service Position* on page 16.
2. Remove PTO belt from clutch. See *Remove PTO Belt* on page 25.

CAUTION: Use care when releasing idler spring tension. Keep body parts away from idlers when performing this operation.

3. Under unit, slowly remove spring hook from anchor bolt to release transaxle idler tension. See Figure 35.

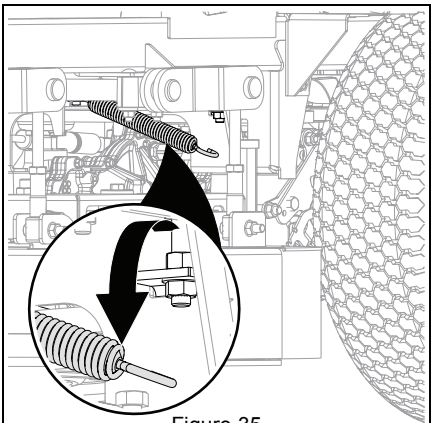

Figure 35

4. Disconnect clutch wire.
5. Remove hardware securing clutch stop bracket to frame and remove bracket. See Figure 36.

NOTICE: DO NOT cut cable tie.

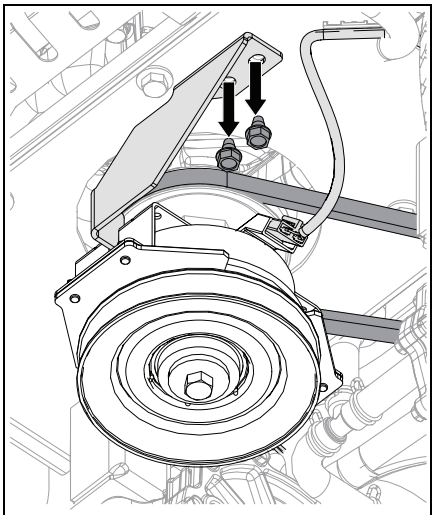

Figure 36

See Figure 37.

6. Remove transaxle drive belt from drive system in the following order:
   a. From right transaxle sheave.
   b. From left transaxle sheave.
   c. From clutch sheave.

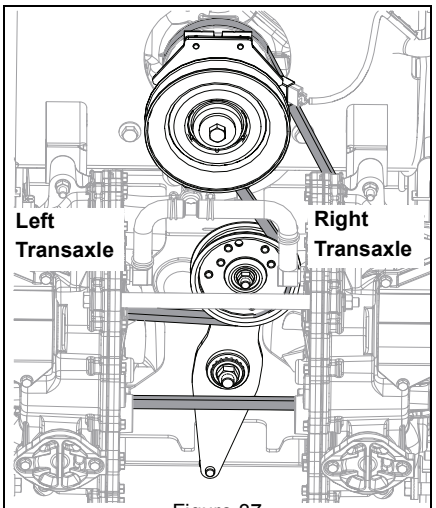

Figure 37

Install Transaxle Drive Belt

See Figure 38.

1. Install transaxle drive belt to drive system in the following order:
   a. Around clutch sheave.
   b. Around left transaxle sheave.
   c. Around right transaxle sheave.
2. Align belt with idler pulley.
3. Reinstall idler spring hook onto anchor bolt. Make sure belt has tension and is aligned in all pulleys.

IMPORTANT: Make sure belt has tension and is aligned in all pulleys. See Figure 38.

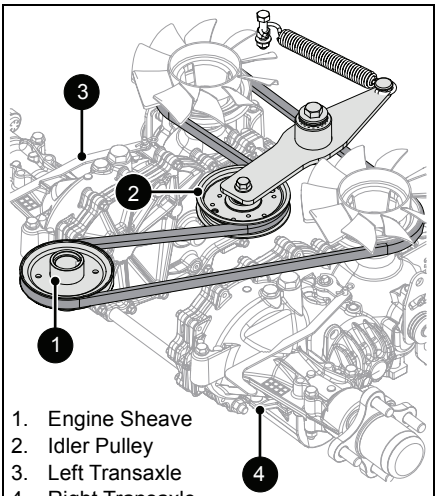

1. Engine Sheave
2. Idler Pulley
3. Left Transaxle
4. Right Transaxle

Figure 38

4. Reinstall clutch stop bracket and secure with original hardware. See Figure 39.
5. Reinstall clutch wire.

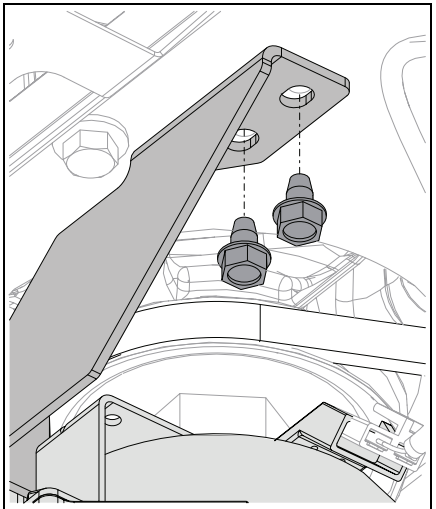

Figure 39

6. Reinstall PTO belt. See *Install PTO Belt* on page 26.

REVERSE CLUTCH BRAKE PLATES

See Figure 40.

1. Remove and retain hardware securing brake plates to clutch bracket.
2. Reverse the brake plates and secure to clutch bracket using original hardware.

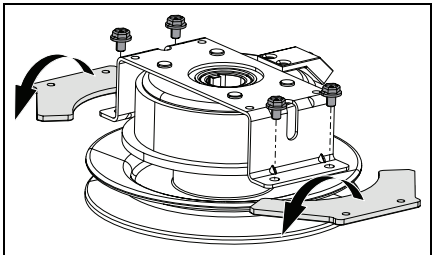

Figure 40

ADJUST ANTI-SCALP WHEELS

Model 991145

See Figure 41.

The anti-scalp wheels are set at the factory for typical mowing height, but can be adjusted for high or low cutting conditions. Make sure all wheels are set to the same height.

1. Place unit in service position. See *Service Position* on page 16.
2. Remove hardware securing anti-scalp wheels to deck and remove wheels.
3. Position wheels as necessary:
   - For a very high cutting height, set the anti-scalp wheels in the lowest position on the bracket.
   - For a very low cutting height, set the anti-scalp wheels in the highest position on the bracket.
4. Secure with original hardware.

IMPORTANT: All anti-scalp wheels MUST be set to the same height.

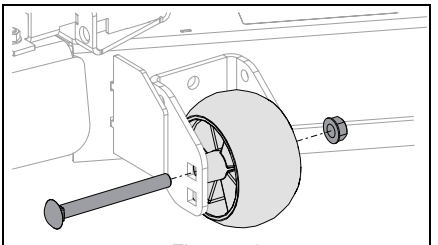

Figure 41

ADJUST PARKING BRAKE LEVER

1. Place unit in service position. See *Service Position* on page 16.

To access brake cable:

2. Chock front wheels and support unit so both drive wheels are off the ground.
3. Remove and retain lug nuts from wheel hub. See Figure 42.
4. Remove drive wheels.

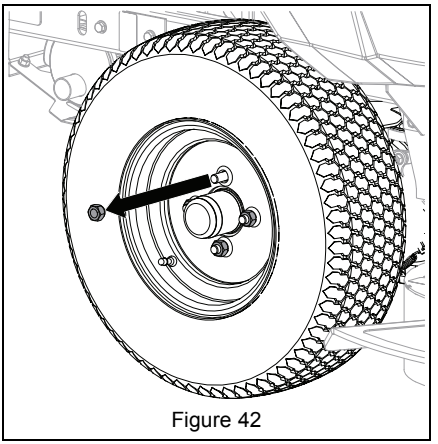

Figure 42

See Figure 43.

5. Loosen jam nuts on cable adjustment barrel.
6. Adjust cable tension: While pulling up on the cable, tighten the upper jam nut until cable is taut, without lifting the brake arm. Tighten lower jam nut once adjusted.
7. Engage parking brake and ensure there is separation of spring coils on cable.
8. Check parking brake and readjust if necessary. See *Check Parking Brake* on page 18.

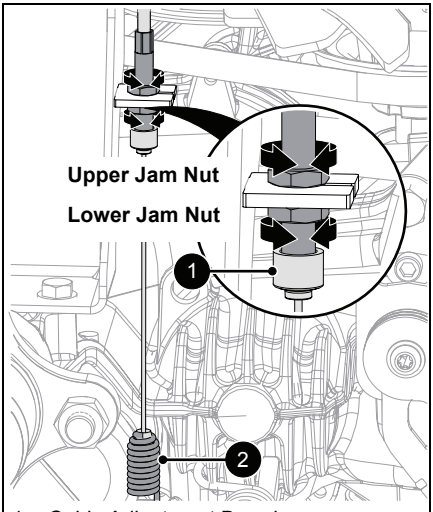

1. Cable Adjustment Barrel
2. Spring

Figure 43

IMPORTANT: Make sure both parking brake cables are within adjustment range.

9. Reinstall tire/wheel assembly and secure with original hardware. Torque lug nuts to 81.3 N•m – 122.0 N•m (60 lb-ft – 90 lb-ft).

REMOVE AND INSTALL MOWER DECK

Remove Deck

1. Place unit in service position. See *Service Position* on page 16.
2. Set deck to lowest cutting height.
3. Position supports, such as wood blocks, under mower deck.
4. Remove PTO belt. See *Remove PTO Belt* on page 25.
5. *Model 991145 Only*: Slowly disconnect lift-assist springs from spring peg on each side of deck. See Figure 44.

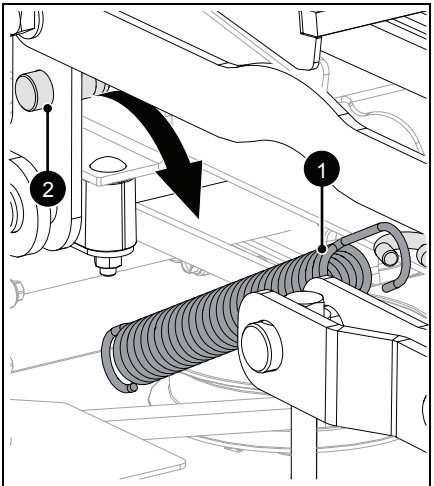

1. Lift-Assist Spring
2. Spring Peg

Figure 44

6. Remove hardware retaining drag links. Retain hardware for reinstallation. See Figure 45.

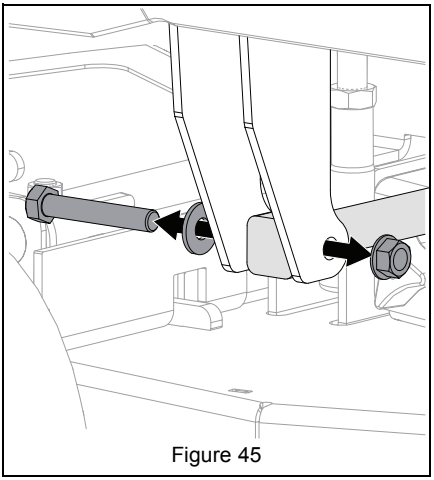

Figure 45

7. Loosen wing knobs securing belt covers to deck and remove belt covers.

8. Remove hardware retaining deck lift links. Retain hardware for reinstallation. See Figure 46.

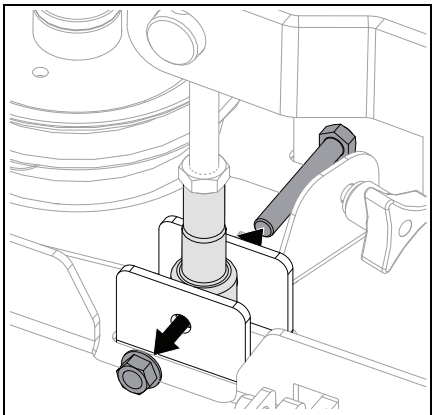

Figure 46

9. Remove deck from under unit.

Install Deck

1. Position deck under unit.

See Figure 47.

2. Reinstall drag links using original hardware.
3. Secure deck lift links to deck lift brackets with original hardware.
4. Reinstall belt covers and tighten wing knobs.

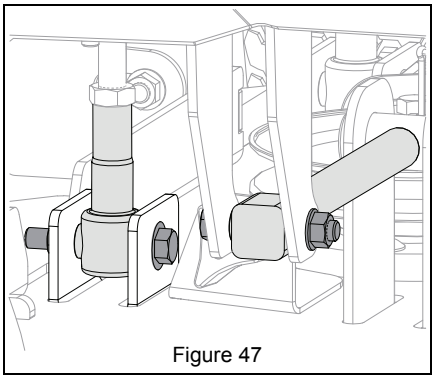

Figure 47

5. Reinstall PTO belt. See *Install PTO Belt* on page 26.
6. *Model 991145 Only:* Connect lift-assist springs to spring pegs.
7. Level the deck. See *Level and Pitch Mower Deck* on page 30.

LEVEL AND PITCH MOWER DECK

IMPORTANT: Make sure unit is on a flat, level surface and that tires are inflated to the recommended pressures.

Check Blade Level and Pitch

1. Raise deck to 3 1/2" (8.9 cm) cutting height.
2. Stop engine, remove key and wait for moving parts to stop and for hot parts to cool.
3. Engage parking brake.

See Figure 48.

4. Position mower blades so ends point left to right across the width of the deck.
5. Measure the distance between the ground and the cutting edge of the left and right blades. If the measurements are not within 4.7 mm (3/16") of each other, level the deck. See *Level and Pitch Mower Deck* on page 30.

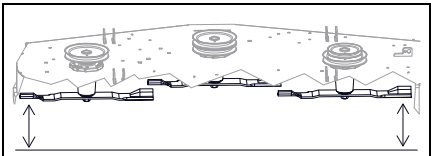

Figure 48

See Figure 49.

6. Position mower blades so ends point front to back and measure the following:
   - At the front of the deck, measure the distance between the ground and the cutting edge of the middle blade.
   - At the rear of the deck, measure the distance between the ground and the cutting edge of the left and the right blades.

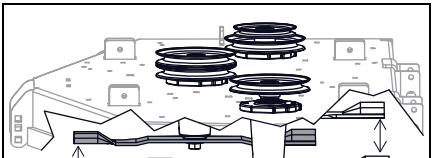

Figure 49

If the front measurement is not 3.2 mm (1/8") lower than the rear measurements, adjust the blade pitch. See *Adjust Blade Pitch* on page 31.

Level Mower Deck

See Figure 50.

1. Lower the high side of deck:
   a. Loosen jam nuts against deck-leveling links.
   b. Turn adjustment bolts counterclockwise.
   c. Measure distance between the ground and cutting edges of left and right blades. Continue adjustment if necessary.
   d. Tighten jam nuts against deck-leveling links.
2. Raise the low side of deck:
   a. Loosen jam nuts against deck-leveling links.
   b. Turn adjustment bolts clockwise.
   c. Measure distance between the ground and cutting edges of left and right blades. Continue adjustment if necessary.
   d. Tighten jam nuts against deck-leveling links.

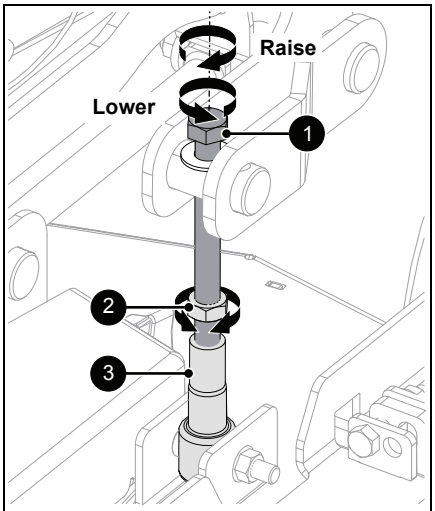

1. Adjustment Bolt
2. Jam Nut
3. Deck-Lift Link

Figure 50

Adjust Blade Pitch

IMPORTANT: Side-to-side deck heights MUST remain level even after completing pitch adjustment.

IMPORTANT: Pitching the front of the blades lower than the rear provides a balance between cut quality and the power needed to cut grass. Certain cutting conditions require the deck rear to be pitched lower than the front. Positioning the deck this way requires more engine power but can provide better cut quality.

1. Increase forward pitch:
   a. Loosen jam nuts against all deck-leveling links.
   b. Turn front adjustment bolts counterclockwise to lower deck front.
   c. Turn rear adjustment bolts clockwise to raise deck rear.
   d. Check adjustment. See *Check Blade Level and Pitch* on page 30.
   e. Tighten jam nuts against deck-leveling links.
2. Decrease forward pitch:
   a. Loosen jam nuts against all deck-leveling links.
   b. Turn front adjustment bolts clockwise to raise deck front.
   c. Turn rear adjustment bolts counterclockwise to lower deck rear.
   d. Check adjustment. See *Check Blade Level and Pitch* on page 30.
   e. Tighten jam nuts against deck-leveling links.

TROUBLESHOOTING

Problem	Probable Cause	Correction
Engine does not start.	Safety Interlock System is not engaged or is faulty.	Check Safety Interlock System. See *Check Safety Interlock System* on page 18.
	Fuel tank is empty.	Fill fuel tank. See *Before Operating Unit* on page 14.
	Fuel supply is contaminated.	Replace with clean fuel.
	Battery is discharged.	Charge battery. See *Install Battery* on page 20.
	Connection between battery and battery cables is poor.	Tighten and/or clean battery and battery cables. See *Clean Battery* on page 20.
	Spark plug wire(s) are loose or spark plug(s) are faulty.	Connect spark plug wire(s) or replace spark plug(s). Refer to engine manual.
	Electrical system is faulty.	Contact your Gravely dealer.
	Engine is faulty.	Contact your Gravely dealer.
Engine runs rough.	Choke control knob is in on position.	Move knob to off position.
	Air filter cartridge is plugged.	Clean or replace air filter cartridge. Refer to engine manual.
	Engine is faulty.	Contact your Gravely dealer.
Engine overheats.	Engine oil level is low.	Add engine oil. Refer to engine manual.
	Cooling fins are plugged.	Clean engine. Refer to engine manual.
	Engine is faulty.	Contact your Gravely dealer.
Unit does not drive.	The transaxles are bypassed.	Engage levers. See *Move Unit Manually* on page 15.
	Transaxle drive belt is faulty.	Contact your Gravely dealer.
	Transaxles are faulty.	Contact your Gravely dealer.
PTO malfunctions.	Operator presence switch is not engaged.	Activate switch by sitting on operator seat.
	Operator presence switch is faulty.	Contact your Gravely dealer.
	PTO belt is faulty.	Replace belt. See *Replace PTO Belt* on page 25.
	PTO switch, wiring, connectors or clutch are faulty.	Contact your Gravely dealer.
Unit moves with engine off and parking brake engaged.	Parking brake needs adjustment.	Adjust parking brake lever. See *Adjust Parking Brake Lever* on page 28.
	Parking brake is faulty.	Contact your Gravely dealer.
Unit does not drive straight.	Tire pressure is incorrect.	Check tire pressure. See *Specifications* on page 35.
	Steering levers need adjustment.	See *Adjust Steering Levers* on page 22.
	Transaxles and/or linkages need adjustment.	Contact your Gravely dealer.
Unit creeps when steering levers are in neutral position.	Transmission and/or linkage need adjustment.	Contact your Gravely dealer.

TROUBLESHOOTING		
Problem	**Probable Cause**	**Correction**
Poor cutting quality.	Mower blades not level or mower deck pitch is incorrect.	Level and adjust pitch of mower deck. See *Level and Pitch Mower Deck* on page 30.
	Mower blades are dull or faulty.	Sharpen or replace mower blades. See *Sharpen Blades* on page 19.
	Mowing speed is too fast.	Drive slower when cutting grass.
	Belt tension or condition is poor.	Replace mower belts. See *Check Mower Belts* on page 20.
	Cutting height is too low.	Do not set height of cut too low. For very tall grass, mow twice.
Blades do not stop within 7 seconds.	Clutch brake plates worn.	Reverse clutch brake plates. See *Reverse Clutch Brake Plates* on page 28. If clutch brake plates have already been reversed, replace clutch.

STORAGE

SHORT-TERM STORAGE

IMPORTANT: NEVER wash unit with high-pressure water or store outdoors.

1. Allow unit to cool and clean with mild soap and water.
2. Tighten all hardware to correct specifications.
3. Inspect unit for visible signs of wear or damage. Repair as needed.
4. Prepare fuel system for storage.

NOTICE: recommends using a quality fuel stabilizer in all fuel. Gasoline left in the fuel system without a stabilizer, even for short periods of time, deteriorates and leaves gummy deposits in the system that may damage the carburetor and fuel hoses, filter and tank. For the best effectiveness, add stabilizer to all fuel containers whenever purchasing fuel. Add the stabilizer to the container before adding fuel.

   a. Add fuel stabilizer (see *Service Parts* on page 17) or equivalent according to manufacturer's instructions to the fuel tank and any fuel containers with remaining fuel.
   b. Run engine outdoors for at least 5 minutes to allow stabilizer to reach the carburetor.

5. Turn key to off position and remove from ignition.
6. Store unit in a cool, dry, protected area. DO NOT store unit outdoors.

LONG-TERM STORAGE

1. Perform short-term storage procedures.
2. Lubricate as directed in *Maintenance Schedule* on page 17.
3. Touch-up all scratched painted surfaces.
4. Remove and charge battery as directed in *Install Battery* on page 20. Store battery in a cool, dry, protected area.
5. Store unit in a cool, dry, protected area. DO NOT store unit outdoors.

START-OF-SEASON PREPARATION

1. Before adding fuel for the first time after long-term storage, add fresh, stabilizer-treated fuel to fuel tank and any fuel containers with remaining fuel.
2. Charge and install the battery.

ACCESSORIES

See your Gravely dealer for a complete list of compatible accessories and attachments for your unit.

Description	Part No.
Mulch Kit – 34"	78807200
Mulch Kit – 44"	79106700
Light Kit	79218300
Hitch Kit	79218100
Folding ROPS Kit	89101000
Grass Catcher Kit	78804300

SPECIFICATIONS		
Model Number	**991144**	**991145**
Description	Compact-Pro 34	Compact-Pro 44
Engine	Kawasaki FX481	Kawasaki FX600
Engine Displacement – cm^3 (in^3)	603 (36.8)	
Maximum RPM – No Load	3600 ± 100	
Oil Capacity	Refer to engine manual.	
Liquid or Air Cooled	Air	
Transmission		
Type	Hydrostatic Drive	
Oil	15W-50 synthetic motor oil (Gravely p/n 00057100) or equivalent	
Hydraulic Oil Filter	Yes	
Drive		
Forward Maximum – km/h (mph)	11.3 (7)	
Reverse Maximum – km/h (mph)	4.8 (3)	
Turning Radius	Zero	
Brakes	Parking	
Electrical		
Starter	Electric	
Battery	12-Volt 300 CCA (U1 Replaceable)	
PTO (Power Take-off)	Electric PTO Clutch / Brake	
Fuel		
Fuel Tank Capacity – Liter (gal)	27.3 (7.2)	
Type	See Engine Manual	
Size and Weight		
Length – cm (in)	190.5 (75)	
Width – cm (in)		
• Discharge Chute Up	91.2 (35.9)	118.6 (46.7)
• Discharge Chute Down	122.7 (48.3)	144.5 (56.9)
Height – cm (in)	115.1 (45.3)	
Weight – kg (lbs)	334.3 (737)	357.9 (789)
Tires		
Front Tire Size – in	13 x 5-6	
Rear Tire Size – in	21 x 7-10	20.5 x 8-10
Recommended Front Tire Pressure – kPa (psi)	82.7 – 103.4 (12 – 15)	
Recommended Rear Tire Pressure – kPa (psi)	82.7 – 103.4 (12 – 15)	
Mower Deck		
Cutting Height – cm (in)	2.5 – 12.7 (1 – 5)	
Cutting Height Increments	0.64 (0.25)	
Cutting Width – cm (in)	86.4 (34)	111.8 (44)
Mower Deck Lift	Mechanical Pin Lock	

Outdoor Power Equipment Limited Warranty

AriensCo warrants to the **original purchaser** that Gravely brand products purchased on or after 3/16/2018 will be free from defects in material and workmanship for the time period noted in the chart below. Equipment put to personal use around a single household or residence is considered “Residential Use.” Equipment put to any business use (agricultural, commercial, or industrial) or used at multiple locations is considered “Commercial Use.” If any product is rented or leased, then the duration of these warranties shall be 90 days after the date of purchase.

An authorized Gravely dealer will repair any defect in material or workmanship, and repair or replace any defective part, subject to the conditions, limitations and exclusions set forth herein. Such repair or replacement will be free of charge (labor and parts) to the original purchaser; except as noted below. Pick-up and delivery are at the owner’s expense.

The warranty code is found on the model and serial number identification label on the unit.

Warranty Code	Product Group	Warranty Period
Products Purchased Prior to 3/16/2018		
CA	Pro-Turn 100, Pro-Turn 200, Compact-Pro, Pro-Stance and Pro-Walk Mowers	3 Years Residential Use. 2 Years Commercial Use.
CD	Pro-Turn 400 Mowers	3 Years Residential Use. 3 Years Commercial Use (Years 1 & 2: Parts & Labor, Year 3: Parts Only).
CF	Pro-Turn Mowers	3 Years Residential Use. 2 Years or 1000 Hours* Commercial Use.
CG	Pro-QXT, Two-wheel Tractors	2 Years.
Products Purchased on or After 3/16/2018		
CH	Pro-Turn Z and Pro-Turn ZX Mowers	4 Years or 750 Hours.*
CG,CJ	Pro-QXT	4 Years or 500 Hours.*
CA, CK	Compact-Pro and Pro-Walk Hydro Mowers	4 Years or 750 Hours.* No Hour Limit for First 2 Years.
CA, CL	Pro-Turn 100 and Pro-Stance Mowers	5 Years or 1000 Hours.* No Hour Limit for First 2 Years.
CA, CM	Pro-Turn 200 Mowers	5 Years or 1250 Hours.* No Hour Limit for First 2 Years.
CD, CN	Pro-Turn 400 Mowers	5 Years or 1500 Hours.* No Hour Limit for First 2 Years.
CO	Pro-Walk Gear Mowers	2 Years.
CP	Pro-Turn Mowers	4 Years or 1000 Hours.*
Products Not Affected by Purchase Date		
AA	Serialized Attachments	1 Year.
AB	Serialized Attachments	2 Years.
HA	ZT, ZT-X and ZT-XL Mowers	3 Years Residential Use. 90 Days Commercial Use.
HB	ZT-HD Mowers	3 Years Residential Use. 1 Year Commercial Use.
UG	Atlas JSV	1 Year.

* Whichever comes first.

Special Extensions

The chart below details special **extensions** to warranty terms. Warranty terms are total time periods covered. If any product is rented or leased, there are no extensions to the 90-day warranty.

Warranty Code	Warranty Term Extension	Warranty Period	Detail
CA, CD, CL, CM, CN, CO	Mower Deck Shell and Main Frame	Lifetime Limited for Residential and Commercial Use.	Warranty is for parts only after the initial warranty period. Components are covered for manufacturer's defect only, not wear.
CH	Gravely V-Twin Engine	4 Years or 500 Hours* for Residential and Commercial Use.	
HA, HB	Mower Deck Shell and Main Frame	5 Years Limited Residential Use. No Commercial Warranty.	Years 1 – 3 parts and labor. Years 4 – 5 parts only.

* Whichever comes first.

Exclusions and Limitations

The charts below detail special **exclusions and limitations** to this warranty.

Warranty Term Exclusions	Warranty Period
Air filters, brake arms, brake linings, brake shoes, brushes, cutters, fuel filters, headlights, knives, light bulbs, lubricants, mower blades, oil, oil filters, spark plugs, scraper blades, shear bolts, skid shoes and spoon tines.	Components are not covered under warranty.

Hydro-Gear Transaxle Limitation
See Hydro-Gear warranty. The warranty is administrated by AriensCo.

Warranty Term Limitations	Warranty Period
Cloth, Plastic and Rubber Components. Mufflers, Tires, Belts and Cables.	2 Years Residential Use. No Commercial Warranty. Components are covered for manufacturer's defect only, not wear.

Exclusions – Items Not Covered by This Warranty

- Parts that are not genuine Gravely service parts are not covered by this warranty and may void the warranty if the parts result in premature wear or damage to the product.
- Damages resulting from the installation or use of any part, accessory, or attachment which is not approved by the AriensCo for use with product(s) identified herein are not covered by this warranty.
- Any misuse, alteration, improper assembly, improper adjustment, neglect, or accident which requires repair is not covered by this warranty.
- Repairs or adjustments required due to failure to use fresh fuel or failure to properly prepare the unit for periods of non-use.
- **Use of gasoline blends exceeding 10% ethanol voids any and all warranties.**
- Products are designed to the specifications in the area that the product was originally distributed. Different areas may have significantly different legal and design requirements. This warranty is limited to the requirements in the area in which the unit was originally distributed. AriensCo does not warrant this product to the requirements of any other area. Warranty service is limited to service within the area originally distributed.
- In countries other than the United States and Canada, contact the AriensCo dealer for warranty policies that govern within your country. Rights may vary from country to country and within any one country.

Evaporative Emissions Control Warranty Exception

As required by the California Air Resources Board (CARB) and the US Environmental Protection Agency (EPA) the evaporative emissions control system is warranted to the ultimate purchaser, and any subsequent owner, for two years.

The CARB and EPA evaporative emissions control system warranty is described in a separate evaporative emission control warranty statement.

Special Exclusions for Job-site Vehicles

The following uses void the warranty terms on Atlas JSV (Warranty Code UG) vehicles:

- Renting or leasing the vehicle.
- Using the vehicle to tow or carry loads in excess of the limits specified in the operator's manual.
- Modifying the vehicle with parts and accessories that are not genuine or authorized Gravely parts or accessories.
- Modifying the vehicle without express written authorization from Gravely.
- Operating the vehicle when it has not been completely and properly assembled and pre-delivered by an authorized Gravely dealer.

Pro-Rated Battery Warranty

Battery warranty is pro rated for one year and is based on the total cost for battery replacement. Units used for rental or lease have no exceptions to the 90-day warranty. Total battery reimbursement will not exceed 45.00 USD.

Months	% Coverage
1 – 3	100
4	75
5	66.6

Months	% Coverage
6	58.3
7	50.0
8	41.6

Months	% Coverage
9	33.3
10	25.0
11	16.6
12	8.3

Engines

The chart below details engine warranty information. Engine warranty terms may vary from the specific terms of this warranty. If inconsistent, the terms of the engine warranty shall apply to the engine and its component parts.

Engine Manufacturer	Detail
Gravely V-Twin	Gravely- and Yamaha-branded engines are warranted by the manufacturer and the warranty is administrated by AriensCo. Refer to the engine manual for warranty statements.
Yamaha	
Briggs & Stratton, Kawasaki, Kohler, Subaru	Covered by the engine manufacturer's warranty. Refer to the engine manufacturer's warranty statements.

Parts and Accessories

Service replacement parts and non-serialized accessories are warranted for 90 days from date of purchase. Parts and accessories must be installed by an authorized Gravely dealer to be covered. Labor is not included.

Customer Responsibilities

Register the product immediately at the time of sale. If the dealer does not register the product, the customer must register the unit on-line at www.gravely.com.

To obtain warranty service, the **original purchaser** must:

- Ensure that the maintenance and adjustments explained in the Operator's Manual are routinely completed.
- Promptly notify AriensCo or an authorized Gravely service representative of the need for warranty service.
- Transport the product to and from the place of warranty service at owner's expense.
- Have the warranty service performed by an authorized Gravely service representative.

To find an authorized dealer use the dealer locator on our websites, or contact us by mail or phone.

Globally except Australia or New Zealand:	Australia:	New Zealand:
AriensCo 655 W. Ryan Street Brillion, WI 54110 Phone: (920) 756 - 4688 www.gravely.com	Masport Australia Pty Ltd 27 Commercial Drive Dandenong South Victoria 3175 Australia Phone: 1300 366 225 www.masport.com.au	Masport Ltd 1-37 Mt. Wellington Highway, Panmure, Auckland 1060 New Zealand Phone: 0800 627 7678 www.masport.co.nz

Disclaimer

AriensCo may from time to time change the design of its products. Nothing contained in this warranty shall be construed as obligating the AriensCo to incorporate such design changes into previously manufactured products, nor shall such changes be construed as an admission that previous designs were defective.

Limitation of Remedy and Damages

AriensCo liability under this warranty, and under any implied warranty that may exist, is limited to repair of any defect in workmanship, and repair or replacement of any defective part. AriensCo shall not be liable for incidental, special, or consequential damages (including lost profits). Some states do not allow the exclusion of incidental or consequential damages, so the above limitation or exclusion may not apply to you.

Australian Consumer Law

The following applies solely to warranties subject to Subsection 102(1) of the Australian Consumer Law: Our goods come with guarantees that cannot be excluded by the Australian Consumer Law. You are entitled to a replacement or refund for a major failure and for compensation for any other reasonably foreseeable loss or damage. You are also entitled to have the goods repaired or replaced if the goods fail to be of acceptable quality and failure does not amount to a major failure.

Disclaimer of Further Warranty

AriensCo makes no warranty, express or implied, other than what is expressly made in this warranty. If the law of your state provides that an implied warranty of merchantability, or an implied warranty of fitness for particular purpose, or any other implied warranty, applies to AriensCo then any such implied warranty is limited to the duration of this warranty. Some states do not allow limitations on how long an implied warranty lasts, so the above limitation may not apply to you.

This warranty gives you specific legal rights, and you may also have other rights which vary from region to region.

655 West Ryan Street
Brillion, WI 54110

www.gravely.com

WARNING

The engine exhaust from this product contains chemicals known to the State of California to cause cancer, birth defects and other reproductive harm.

ARIENS | CO

PRINTED in WISCONSIN