Goodman
Air Conditioning & Heating

AMST Series



Multi-Position, Multi-Speed, ECM-Based Air Handler with Internal TXV 1½ to 5 Tons

Contents

Air Handler Nomenclature 2
Heater Kit Nomenclature 2
Product Specifications 3
Dimensions 4
Airflow Data 5
Heat Kit Data 7
Wiring Diagram 9
Accessories 12

R32

Product Features

- Internal factory-installed thermal expansion valves for cooling and heat pump applications
- Direct drive, multi-speed ECM blower motor
- All-aluminum evaporator coil
- Coil mounting track for quick repositioning
- Optimized for use with R-32 refrigerant
- Cabinet air leakage less than 2.0% at 1.0 inch H_2O when tested in accordance with ASHRAE standard 193
- Cabinet air leakage less than 1.4% at 0.5 inch H_2O when tested in accordance with ASHRAE standard 193
- AHRI certified; ETL listed
- UL 60335 2-40 Compliant
- Factory installed R32 sensor designed for lifespan of coil
- Rigid SmartFrame™ cabinet
- Horizontal or vertical configuration capabilities
- 21" depth for easier attic access
- DecaBDE-free thermoplastic drain pan with secondary drain connections
- Screw-less sides and back helps to reduce condensation when installed in humid locations
- Foil-faced insulation covers the internal casing to reduce cabinet condensation
- Galvanized, leather grain-embossed finish
- Glue-less cabinet insulation retention
- Tool-less filter access
- Field Installed 3 kW – 25 kW electric heater kits available

10 YEAR PARTS LIMITED WARRANTY*

ALL ALUMINUM COIL

AHRI CERTIFIED www.ahridirectory.org

c ETL LISTED us Intertek

COMPANY WITH QUALITY SYSTEM CERTIFIED BY DNV GL ▪ ISO 9001 ▪

COMPANY WITH ENVIRONMENTAL SYSTEM CERTIFIED BY DNV GL ▪ ISO 14001 ▪

BBB ACCREDITED BUSINESS

* Complete warranty details available from your local dealer or at www.goodmanmfg.com. To receive the 10-Year Parts Limited Warranty, online registration must be completed within 60 days of installation. Online registration and some of the additional requirements are not required in Florida, California, or Québec. The duration of warranty coverage in Texas and Florida differs in some cases. Other limitations and exclusions apply; refer to complete warranty details for a full list of limitations and exclusions.

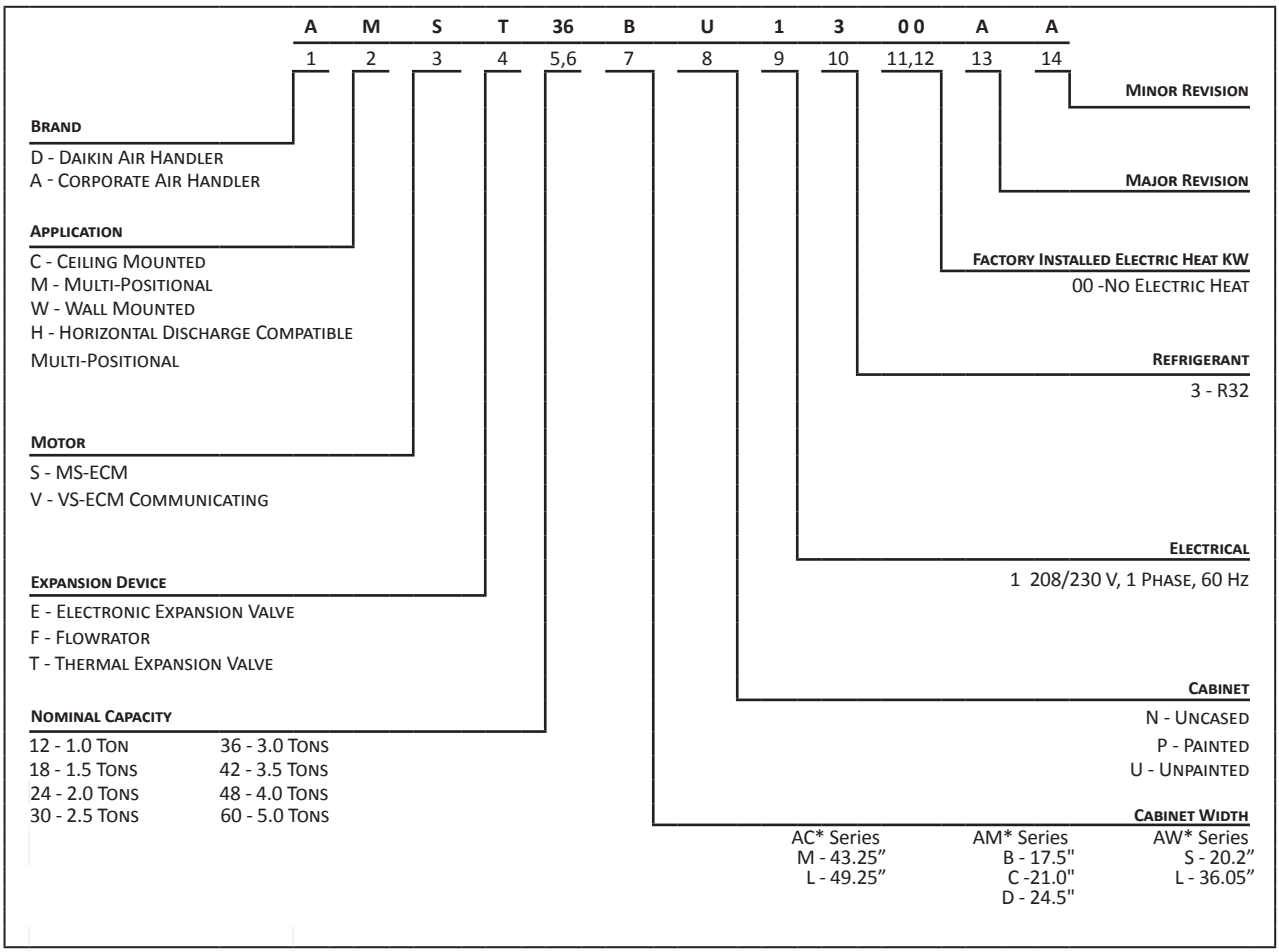
A M S T 36 B U 1 3 00 A A
1 2 3 4 5,6 7 8 9 10 11,12 13 14
Minor Revision
Major Revision
Factory Installed Electric Heat KW
00 -No Electric Heat
Refrigerant
3 - R32
Electrical
1 208/230 V, 1 Phase, 60 Hz
Cabinet
N - Uncased
P - Painted
U - Unpainted
Cabinet Width
AC* Series
M - 43.25”
L - 49.25”
AM* Series
B - 17.5"
C -21.0"
D - 24.5"
AW* Series
S - 20.2”
L - 36.05”
Brand
D - Daikin Air Handler
A - Corporate Air Handler
Application
C - Ceiling Mounted
M - Multi-Positional
W - Wall Mounted
H - Horizontal Discharge Compatible Multi-Positional
Motor
S - MS-ECM
V - VS-ECM Communicating
Expansion Device
E - Electronic Expansion Valve
F - Flowrator
T - Thermal Expansion Valve
Nominal Capacity
12 - 1.0 Ton
18 - 1.5 Tons
24 - 2.0 Tons
30 - 2.5 Tons
36 - 3.0 Tons
42 - 3.5 Tons
48 - 4.0 Tons
60 - 5.0 Tons

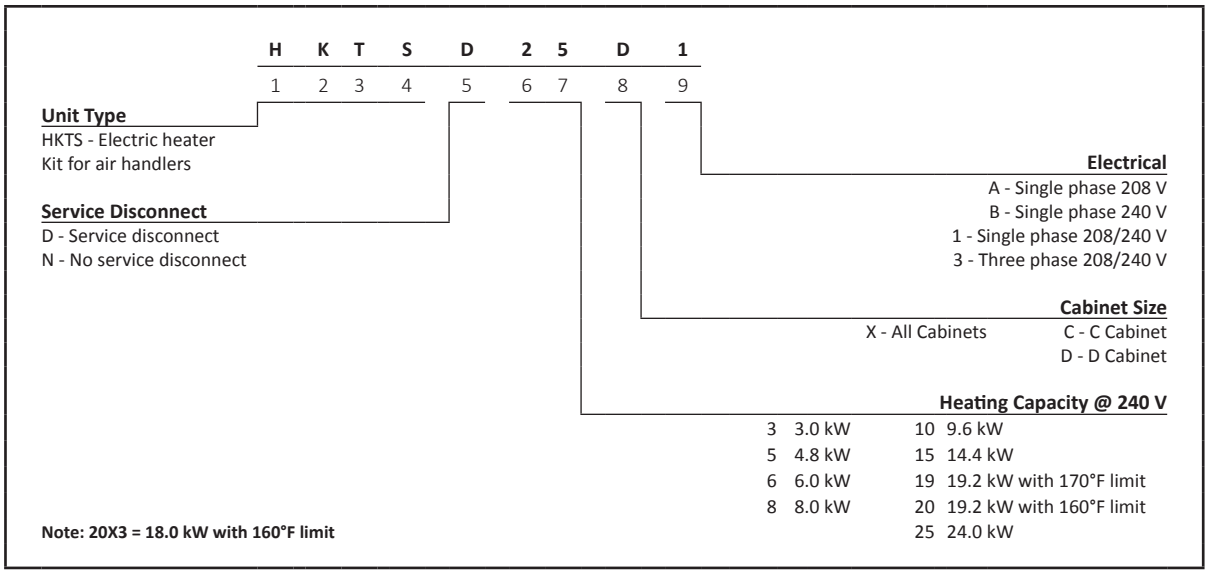
H K T S D 2 5 D 1
1 2 3 4 5 6 7 8 9
Unit Type
HKTS - Electric heater Kit for air handlers
Service Disconnect
D - Service disconnect
N - No service disconnect
Electrical
A - Single phase 208 V
B - Single phase 240 V
1 - Single phase 208/240 V
3 - Three phase 208/240 V
Cabinet Size
X - All Cabinets
C - C Cabinet
D - D Cabinet
Heating Capacity @ 240 V
3 3.0 kW
5 4.8 kW
6 6.0 kW
8 8.0 kW
10 9.6 kW
15 14.4 kW
19 19.2 kW with 170°F limit
20 19.2 kW with 160°F limit
25 24.0 kW
Note: 20X3 = 18.0 kW with 160°F limit

	AMST 24BU13*	AMST 30BU13*	AMST 36BU13*	AMST 36CU13*	AMST 42CU13*	AMST 48CU13*	AMST 60DU13*
NOMINAL RATINGS							
Cooling (Btu/h)	24,000	30,000	36,000	36,000	42,000	48,000	60,000
Nominal Tons	1.5 Ton	2.0 Ton	2.5 Ton	3 Ton	3.5 Ton	4 Ton	5 Ton
BLOWER							
Diameter	10"	10"	10"	10"	10"	10"	11"
Width	6"	6"	6"	8"	8"	10"	10"
COIL CONNECTIONS							
Liquid	⅜"	⅜"	⅜"	⅜"	⅜"	⅜"	⅜"
Suction	¾"	¾"	¾"	¾"	¾"	⅞"	⅞"
Coil Drain Connect (FPT)	¾"	¾"	¾"	¾"	¾"	¾"	¾"
ELECTRICAL DATA							
Voltage	208/240 -1	208/240-1	208/240-1	208/240-1	208/240-1	208/240-1	208/240-1
Minimum Circuit Ampacity	5.8	5.6	5.6	7.1	5.9	7.1	8.6
Max. Overcurrent Device (Amps)	15	15	15	15	15	15	15
Min. / Max VAC	197 / 253	197 / 253	197 / 253	197 / 253	197 / 253	197 / 253	197 / 253
Blower Motor							
Full Load Amps (FLA)	4.6	4.5	4.5	5.7	5.7	5.7	6.9
Horsepower (HP)	¾	¾	¾	¾	¾	¾	1
SHIP WEIGHT (LBS.)	112	129	129	153	153	153	167

*Airflow rate @.3 static

Note: Assumes dry coil; SCFM correction for wet coil = 4% (208V / 240V)

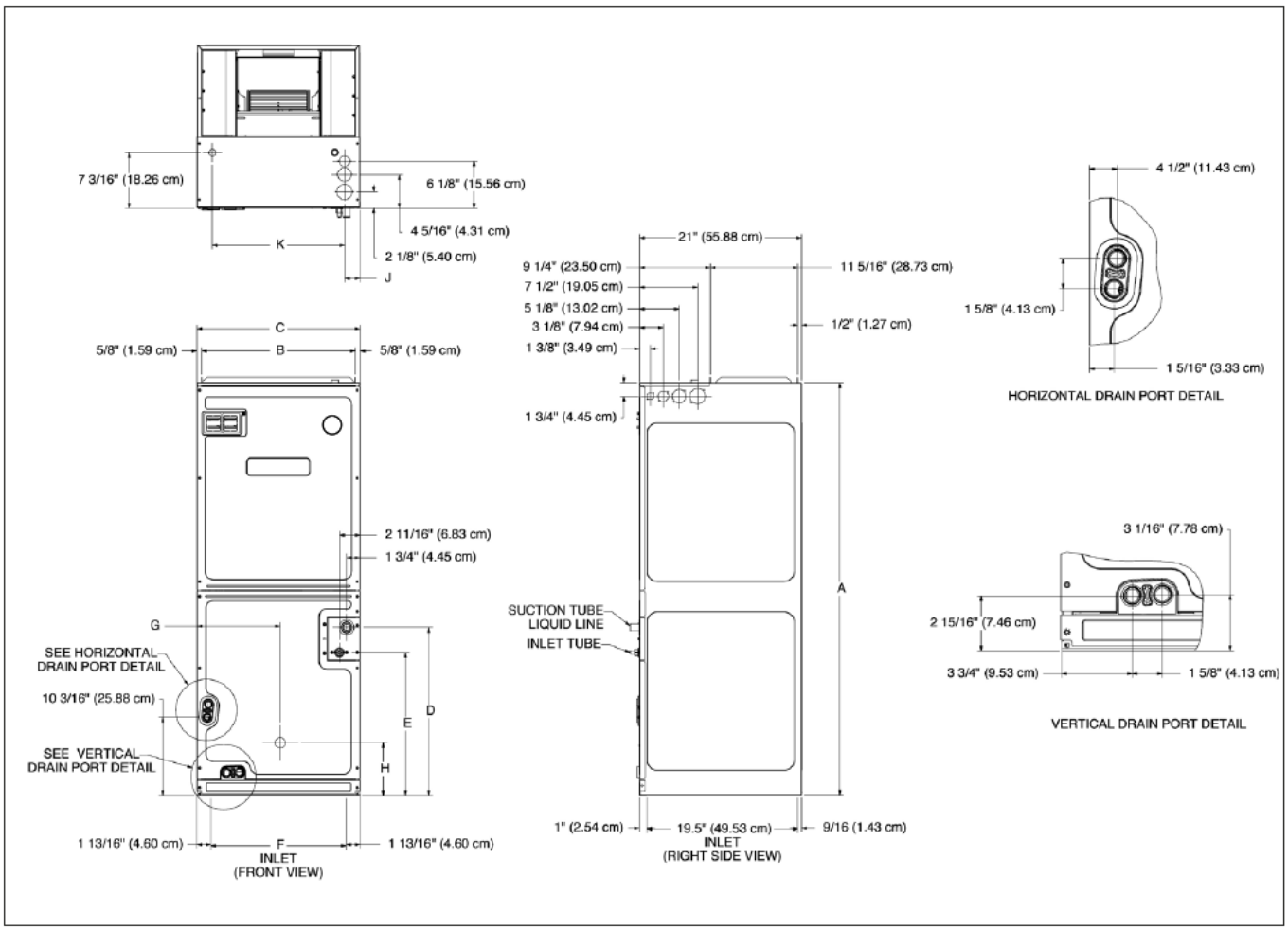

Model	A"	B"	C"	D"	E"	F"	G"	H"	J"	K"
AMST24BU*	45	16 5/16	17 9/16	15¼	12	12½	9	12 9/16	2	13⅝
AMST30BU*	53 7/16	16 5/16	17 9/16	23 11/16	20 1/16	12½	9	12¾	2	13⅝
AMST36BU*	53 7/16	16 5/16	17 9/16	23 11/16	20 1/16	12½	9	12¾	2	13⅝
AMST36CU*	49	19 13/16	21⅛	21 12/16	17¾	16 1/16	9	12¾	2	17⅛
AMST42CU*	53 7/16	19 13/16	21⅛	21 12/16	18½	16 10/16	9	12¾	2	17⅛
AMST48CU*	58	19 13/16	21⅛	26 3/16	22 15/16	14 10/16	10 13/16	6 13/16	2	17⅛
AMST06DU*	58	23¼	24⅝	26	22 3/4	17 11/16	12 9/16	13 13/16	2	20⅝

MODEL NUMBER	SPEED TAP	STATIC PRESSURE (IN W.C)								
		0.1	0.2	0.3	0.4	0.5	0.6	0.7	0.8	0.9
AMST24 BU1300AA	T1	825	800	745	730	660	645	560	550	460
	T2	850	825	770	750	675	665	590	575	470
	T3	935	910	865	850	790	780	715	705	620
	T4	1,045	1,025	985	970	920	910	850	845	785
	T5	1,100	1,080	1,035	1,020	970	960	905	900	840
	T6	900	875	830	815	750	740	670	655	550
	T7	1,030	1,005	960	950	900	890	825	820	760
	T8	1,215	1,195	1,155	1,145	1,105	1,095	1,045	1,040	980
	T9	1,215	1,195	1,155	1,145	1,105	1,095	1,045	1,040	980
AMST30 BU1300	T1	855	830	780	765	705	695	625	615	515
	T2	920	895	845	830	780	770	710	700	615
	T3	985	960	915	900	850	840	785	775	710
	T4	1,070	1,050	1,005	995	945	935	890	885	830
	T5	1,185	1,165	1,125	1,115	1,070	1,060	1,015	1,010	960
	T6	985	960	915	900	850	840	785	775	710
	T7	1,070	1,050	1,005	995	945	935	890	885	830
	T8	1,185	1,165	1,125	1,115	1,070	1,060	1,015	1,010	960
	T9	1,185	1,165	1,125	1,115	1,070	1,060	1,015	1,010	960
AMST36 BU1300	T1	855	830	780	765	705	695	625	615	515
	T2	920	895	845	830	780	770	710	700	615
	T3	985	960	915	900	850	840	785	775	710
	T4	1,070	1,050	1,005	995	945	935	890	885	830
	T5	1,185	1,165	1,125	1,115	1,070	1,060	1,015	1,010	960
	T6	985	960	915	900	850	840	785	775	710
	T7	1,070	1,050	1,005	995	945	935	890	885	830
	T8	1,185	1,165	1,125	1,115	1,070	1,060	1,015	1,010	960
	T9	1,185	1,165	1,125	1,115	1,070	1,060	1,015	1,010	960
AMST36 CU1300	T1	1,070	1,035	960	935	830	810	700	690	610
	T2	1,165	1,130	1,055	1,035	960	940	825	815	715
	T3	1,285	1,255	1,190	1,170	1,100	1,085	990	980	885
	T4	1,430	1,400	1,345	1,330	1,260	1,250	1,175	1,165	1,065
	T5	1,560	1,530	1,470	1,455	1,390	1,380	1,310	1,300	1,235
	T6	1,430	1,400	1,345	1,330	1,260	1,250	1,175	1,165	1,065
	T7	1,735	1,710	1,660	1,645	1,580	1,570	1,510	1,500	1,440
	T8	1,830	1,805	1,755	1,740	1,685	1,675	1,605	1,595	1,525
	T9	1,830	1,805	1,755	1,740	1,685	1,675	1,605	1,595	1,525

MODEL NUMBER	SPEED TAP	STATIC PRESSURE (IN W.C)								
		0.1	0.2	0.3	0.4	0.5	0.6	0.7	0.8	0.9
AMST42 CU1300	T1	1,165	1,140	1,085	1,065	990	975	895	880	765
	T2	1,230	1,205	1,150	1,135	1,070	1,060	990	975	850
	T3	1,410	1,385	1,335	1,325	1,280	1,270	1,195	1,185	1,115
	T4	1,440	1,415	1,365	1,355	1,305	1,295	1,235	1,225	1,155
	T5	1,495	1,470	1,425	1,415	1,365	1,355	1,305	1,295	1,220
	T6	1,580	1,550	1,510	1,490	1,450	1,420	1,380	1,330	1,300
	T7	1,410	1,385	1,335	1,325	1,280	1,270	1,195	1,185	1,115
	T8	1,760	1,730	1,700	1,670	1,640	1,610	1,580	1,550	1,505
	T9	1,760	1,730	1,700	1,670	1,640	1,610	1,580	1,550	1,505
AMST48 CU1300	T1	1,420	1,390	1,330	1,310	1,235	1,220	1,135	1,125	1,050
	T2	1,465	1,435	1,375	1,355	1,280	1,265	1,165	1,155	1,065
	T3	1,580	1,550	1,490	1,470	1,400	1,390	1,315	1,305	1,230
	T4	1,635	1,610	1,560	1,545	1,480	1,470	1,400	1,390	1,315
	T5	1,735	1,710	1,660	1,640	1,560	1,550	1,485	1,475	1,410
	T6	1,420	1,390	1,330	1,310	1,235	1,220	1,135	1,125	1,050
	T7	1,800	1,775	1,730	1,715	1,675	1,635	1,595	1,550	1,460
	T8	1,820	1,795	1,750	1,735	1,680	1,670	1,605	1,595	1,525
	T9	1,820	1,795	1,750	1,735	1,680	1,670	1,605	1,595	1,525
AMST60 DU1300	T1	1,215	1,175	1,095	1,070	975	950	790	780	700
	T6	1,815	1,785	1,725	1,710	1,650	1,640	1,570	1,560	1,490
	T7	1,360	1,325	1,250	1,230	1,145	1,125	1,010	990	850
	T8	2,070	2,045	1,995	1,980	1,930	1,920	1,855	1,845	1,785
	T9	1,970	1,945	1,895	1,880	1,815	1,805	1,740	1,730	1,660

NOTES

1. Airflow data indicated is at 230V without air filter in place.
2. Static on table includes static from media filter. Motor Speed Tap should be selected with media filter included in static value.
3. The chart is for information only. For satisfactory operation, external static pressure must not exceed value shown on rating plate.
4. The cooling/heat pump speed tap should be selected based on the AHRI rating. Otherwise, select a speed tap that provides a minimum 350 CFM per outdoor ton.
5. Use the CFM adjustment fectors of 0.98 for horizontal left and 0.96 for horisontal right & downfow orientations.
6. When applying a humidistat (normally closed), refer to the installation and operating instructions. The humidistat can adjust the cooling airflow to 85%.
7. Airflow test data is proved to satisfy minimum room area (Amin) and minimum airflow at mitigation mode (Qmin). See Table 9.

Heater Kit Model	Circuit 1 (208V/240V)			Circuit 2 (208V/240V)			Single-Point Kit (208V/240V)	
	Heater Amps	MCA[1]	MOP[2]	Heater Amps	MCA[1]	MOP[2]	MCA[1]	MOP[2]
AMST24BU1300AA	0/0	5.8/5.8	15/15	---	---	---	---	---
HKTSN03X1	10.8/12.5	19.2/21.4	20/25	---	---	---	---	---
HKTS*05X1	17.3/20.0	27.4/30.8	30/35	---	---	---	---	---
HKTSN06X1	21.7/25.0	32.9/37.0	35/40	---	---	---	---	---
HKTS*08X1	28.9/33.3	41.9/47.4	45/50	---	---	---	---	---
HKTS*10X1	34.7/40.0	49.1/55.8	50/60	---	---	---	---	---
HKTSD15XA/B	34.7/40.0	49.1/55.8	50/60	17.3/20	21.6/25	25/25	70.7/80.7	80/90
AMST30BU1300AA	0/0	5.6/5.6	15/15	---	---	---	---	---
HKTSN03X1	10.8/12.5	19.1/21.2	20/25	---	---	---	---	---
HKTS*05X1	17.3/20.0	27.2/30.6	30/35	---	---	---	---	---
HKTSN06X1	21.7/25.0	32.8/36.9	35/40	---	---	---	---	---
HKTS*08X1	28.9/33.3	41.8/47.2	45/50	---	---	---	---	---
HKTS*10X1	34.7/40.0	49.0/55.6	50/60	---	---	---	---	---
HKTSD15XA/B	34.7/40	49/55.6	50/60	17.3/20	21.6/25	25/25	70.6/80.6	80/90
AMST36BU1300AA	0/0	5.6/5.6	15/15	---	---	---	---	---
HKTSN03X1	10.8/12.5	19.1/21.2	20/25	---	---	---	---	---
HKTS*05X1	17.3/20.0	27.2/30.6	30/35	---	---	---	---	---
HKTSN06X1	21.7/25.0	32.8/36.9	35/40	---	---	---	---	---
HKTS*08X1	28.9/33.3	41.8/47.2	45/50	---	---	---	---	---
HKTS*10X1	34.7/40.0	49.0/55.6	50/60	---	---	---	---	---
HKTSD15XA/B	34.7/40	49/56	50/60	17.3/20	21.6/25	25/25	70.6/80.6	80/90
AMST36CU1300AA	0/0	7.1/7.1	15/15	---	---	---	---	---
HKTSN03X1	10.8/12.5	20.6/22.8	25/25	---	---	---	---	---
HKTS*05X1	17.3/20.0	28.8/32.1	30/35	---	---	---	---	---
HKTSN06X1	21.7/25.0	34.2/38.4	35/40	---	---	---	---	---
HKTS*08X1	28.9/33.3	43.2/48.8	45/50	---	---	---	---	---
HKTS*10X1	34.7/40.0	50.5/57.1	60/60	---	---	---	---	---
HKTS*15X3 ^	0/0	7.1/7.1	15/15	30.0/34.6	37.5/43.3	40/45	---	---
HKTSD15XA/B	34.7/40	50.5/57.1	60/60	17.3/20	21.6/25	25/25	72.1/82.1	80/90
HKTSD19CA/B	34.7/40	50.5/57.1	60/60	34.7/40	43.4/50	45/50	93.8/107	100/110
AMST42CU1300AA	0/0	7.1/7.1	15/15	---	---	---	---	---
HKTSN03X1	10.8/12.5	20.6/22.8	20/25	---	---	---	---	---
HKTS*05X1	17.3/20.0	28.8/32.1	30/35	---	---	---	---	---
HKTSN06X1	21.7/25.0	34.2/38.4	35/40	---	---	---	---	---
HKTS*08X1	28.9/33.3	43.2/48.8	45/50	---	---	---	---	---
HKTS*10X1	34.7/40.0	50.5/57.1	60/60	---	---	---	---	---
HKTS*15X3 ^	0/0	7.1/7.1	15/15	30/34.6	37.5/43.3	40/45	---	---
HKTSD15XA/B	34.7/40	50.5/57.1	60/60	17.3/20	21.6/25	25/25	72.1/82.1	80/90
HKTSD19CA/B	34.7/40	50.5/57.1	60/60	34.7/40	43.4/50	45/50	93.8/107	100/110

See Notes on Page 8.

HEATER KIT MODEL	CIRCUIT 1 (208V/240V)			CIRCUIT 2 (208V/240V)			SINGLE-POINT KIT (208V/240V)	
	HEATER AMPS	MCA[1]	MOP[2]	HEATER AMPS	MCA[1]	MOP[2]	MCA[1]	MOP[2]
AMST48CU1300AA	0/0	7.1/7.1	15/15	---	---	---	---	---
HKTSN03X1	10.8/12.5	20.6/22.8	25/25	---	---	---	---	---
HKTS*05X1	17.3/20.0	28.8/32.1	30/35	---	---	---	---	---
HKTSN06X1	21.7/25.0	34.2/38.4	35/40	---	---	---	---	---
HKTS*08X1	28.9/33.3	43.2/48.8	45/50	---	---	---	---	---
HKTS*10X1	34.7/40	50.5/57.1	60/60	---	---	---	---	---
HKTS*15X3 ^	0/0	7.1/7.1	15/15	30.0/34.6	37.5/43.3	40/45	---	---
HKTSD15XA/B	34.7/40	50.5/57.1	60/60	17.3/20	21.6/25	25/25	72.1/82.1	80/90
HKTSD19CA/B	34.7/40	50.5/57.1	60/60	34.7/40	43.4/50	45/50	93.9/107	100/110
AMST60DU1300AA	0/0	8.6/8.6	15/15	---	---	---	---	---
HKTSN03X1	10.8/12.5	22.2/24.3	25/25	---	---	---	---	---
HKTS*05X1	17.3/20.0	30.3/33.6	35/35	---	---	---	---	---
HKTSN06X1	21.7/25.0	35.7/39.9	40/40	---	---	---	---	---
HKTS*08X1	28.9/33.3	44.7/50.3	45/60	---	---	---	---	---
HKTS*10X1	34.7/40.0	52.0/58.6	60/60	---	---	---	---	---
HKTS*15X3 ^	0/0	8.6/8.6	15/15	30.0/34.6	37.5/43.3	40/45	---	---
HKTSD15XA/B	34.7/40	52/58.6	60/60	17.3/20	21.7/25	25/25	73.6/83.6	80/90
HKTS*20X3 ^	0/0	8.6/8.6	15/15	37.5/43.3	46.9/54.1	50/60	---	---
HKTSD20DA/B	34.7/40	52/58.6	60/60	34.7/40	43.3/50	45/50	95.3/109	100/110
HKTSD25DA/B	34.7/40	52/58.6	60/60	52/60	65/75	70/80	117/134	125/150

[1]Minimum Circuit Ampacity (Heater Amps + Motor Amps) X 1.25
[2]Maximum Overcurrent Protection = 2.25 X Motor Amps + Heater Amps
^ Three-phase Heater Kits (Circuit 1: Single-phase for Air Handlers Circuit 2: Three-phase for Heater Kits)
* D - Service disconnect, N - No service disconnect
--- indicates Not Required

HEATING kW CORRECTION FACTOR

SUPPLY VOLTAGE	240	230	220	210	208
CORRECTION FACTOR	1.00	0.92	0.84	0.77	0.75

Multiply the 240-volt heating capacity by correction factors.

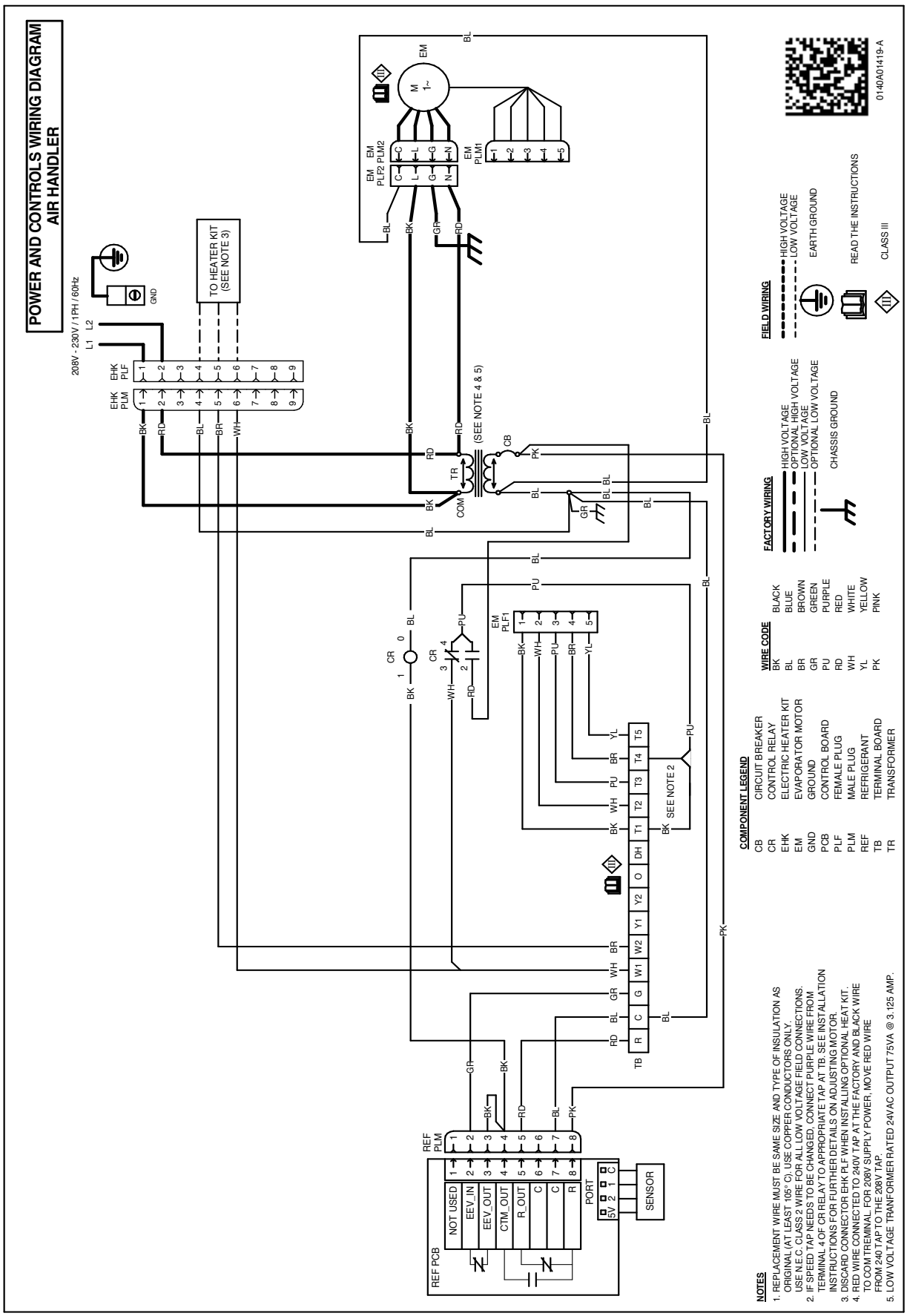

WARNING — ***High Voltage:*** Disconnect all power before servicing or installing this unit. Multiple power sources may be present. Failure to do so may cause property damage, personal injury, or death.

Wiring is subject to change. Always refer to the wiring diagram on the unit for the most up-to-date wiring.

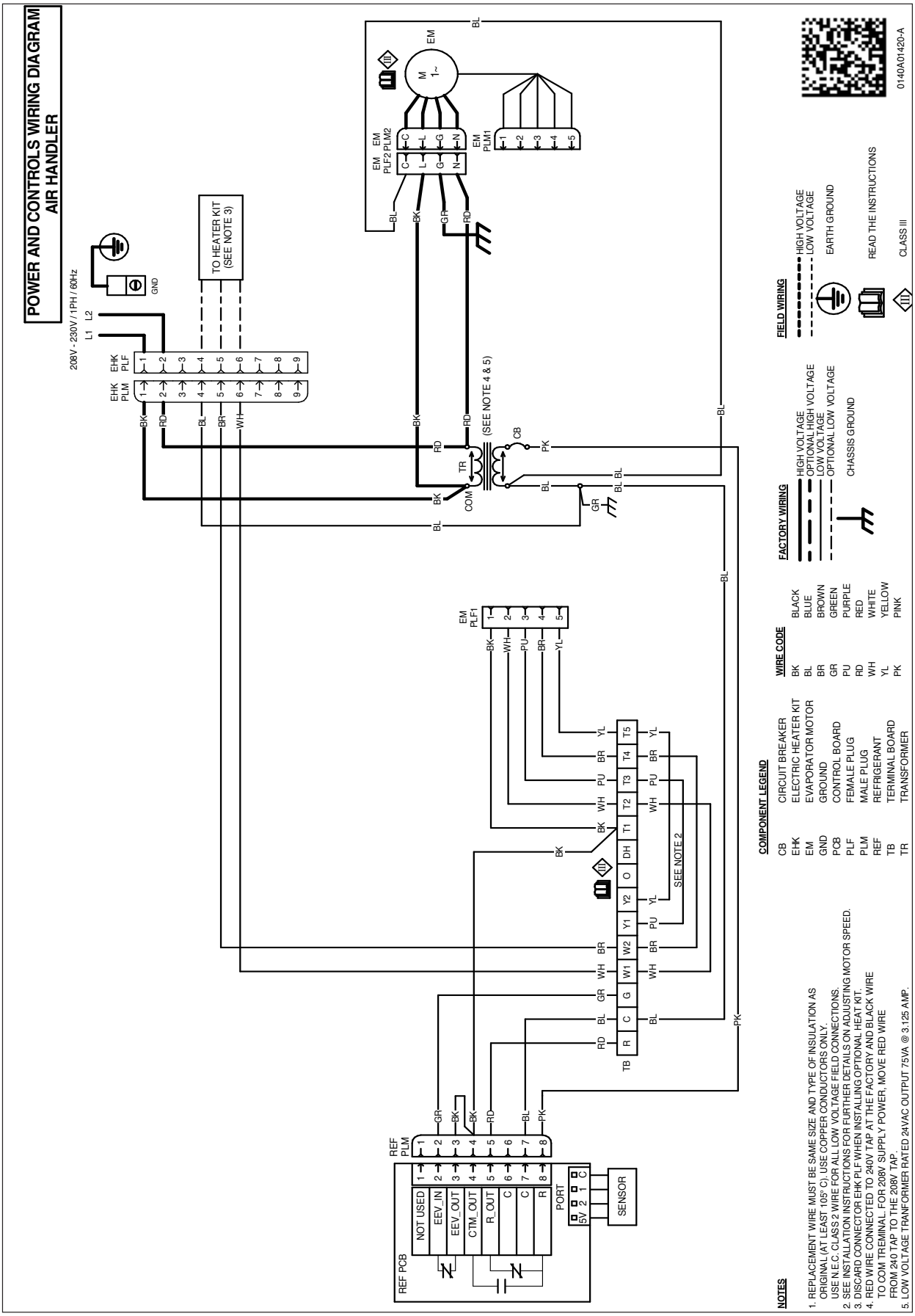

WARNING — ***High Voltage:*** Disconnect all power before servicing or installing this unit. Multiple power sources may be present. Failure to do so may cause property damage, personal injury, or death.

Wiring is subject to change. Always refer to the wiring diagram on the unit for the most up-to-date wiring.

DOWNFLOW KITS

DFKE-02	DFKE-03
AMST24BU1300**	AMST48CU1300**
AMST30BU1300**	AMST60DU1300**
AMST36BU1300**	
AMST36CU1300**	
AMST42CU1300**	

HIGH HUMIDITY KIT

HHK0004	HHK0005	HHK0007
AMST24BU1300**	AMST36CU1300**	AMST60DU1300**
AMST30BU1300**	AMST42CU1300**	
AMST36BU1300**	AMST48CU1300**	

CONDENSATE MANAGEMENT KIT

CMK0018	CMK0019	CMK0020
AMST24BU1300**	AMST30BU1300**	AMST48CU1300**
AMST36CU1300**	AMST36BU1300**	AMST60DU1300**
	AMST42CU1300**	

FILTERS

CHASSIS	PART #	SIZE
B	ALFH16201E	16.0” x 20.0”
C	ALFH1912201E	19.5” x 20.0”
D	ALFH20231E	23.0” x 20.0”

SINGLE POINT WIRING KIT (SPW-01)

HEATER KIT MODEL	SPWK-B	SPWK-C	SPWK-D
HKTSD15XA	AMST24BU1300** AMST30BU1300**	AMST36CU1300** AMST42CU1300** AMST48CU1300**	AMST60DU1300**
HKTSD15XB			
HKTSD19CA			
HKTSD19CB			
HKTSD20DA			AMST60DU1300**
HKTSD20DB			
HKTSD25DA			AMST60DU1300**
HKTSD25DB			

FRPP DRAIN PAN KIT FOR UVC APPLICATION

MODULE	FRPP DRAIN PAN KIT
AMST24BU1300**	UVPK01
AMST30BU1300**	UVPK02
AMST36BU1300**	
AMST36CU1300**	UVPK03
AMST42CU1300**	UVPK04
AMST48CU1300**	UVPK05
AMST60DU1300**	UVPK07

R32 ZONING ACCESSORY KIT

KIT NUMBER	MODELS
0230K00007	All AMST Models

Our continuing commitment to quality products may mean a change in specifications without notice.
©2024 ***DAIKIN COMFORT TECHNOLOGIES MANUFACTURING. L.P.*** • Houston, Texas • Printed in the USA