Installation Manual

Installation and appliance setup

INSTALLER: Leave this manual with the appliance.
CONSUMER: Retain this manual for future reference.

***NOTICE: DO NOT** discard this manual!*

outdoor lifestyles
by hearth & home technologies®

Model:

ODLANAIGST-48
ODLANAIGST-60

GAS-FIRED
C UL US
LISTED
MH61458

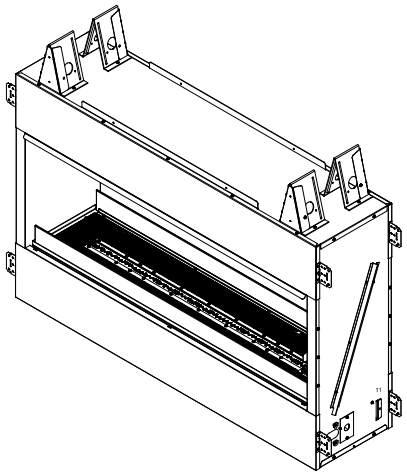

WARNING! Risk Of Fire!

Do not install glass doors on this appliance.

Glass doors could cause overheating of adjacent structures.

DANGER

FIRE OR EXPLOSION HAZARD

If you smell gas:

- Shut off gas to the appliance.
- Extinguish any open flame.
- If odor continues, leave the area immediately.
- After leaving the area, call your gas supplier or fire department.
- Failure to follow these instructions could result in fire or explosion, which could cause property damage, personal injury, or death.

WARNING

Do not store or use gasoline or other flammable vapors and liquids in the vicinity of this or any other appliance

An LP-cylinder not connected for use shall not be stored in the vicinity of this or any other appliance.

WARNING: For outdoor use only.
Installation and service must be performed by a qualified installer, service agency, or the gas supplier.

WARNING: Improper installation, adjustment, alteration, service or maintenance can cause injury or property damage. Read the installation, operating and maintenance instructions thoroughly before installing or servicing this equipment.

WARNING: If the information in this manual is not followed exactly, a fire or explosion may result causing property damage, personal injury, or loss of life.

DANGER

CARBON MONOXIDE HAZARD

This appliance can produce carbon monoxide which has no odor.

Using it in an enclosed space can kill you.

Never use this appliance in an enclosed space such as a camper, tent, car or home.

⚠ Safety Alert Key:

- ***DANGER!*** *Indicates a hazardous situation which, if not avoided will result in death or serious injury.*
- ***WARNING!*** *Indicates a hazardous situation which, if not avoided could result in death or serious injury.*
- ***CAUTION!*** *Indicates a hazardous situation which, if not avoided, could result in minor or moderate injury.*
- ***NOTICE:*** *Used to address practices not related to personal injury.*

Table of Contents

Standard Work Checklist 3

1 Product Specific Information
- A. Appliance Certification 4
- B. BTU Specifications 4
- C. High Altitude Installations 4
- D. Non-combustible Materials Specification ... 4
- E. Combustible Materials Specification 4
- F. Electrical Codes 4
- G. Fuel 4

2 Getting Started
- A. Design and Installation Considerations 5
- B. Tools and Supplies Needed 5
- C. Inspect Appliance and Components 6

3 Framing and Clearances
- A. Appliance Dimension Diagrams 7
- B. Clearances to Combustibles 9
- C. Vent Minimum Clearances 12
- D. Hearth Extension/Floor Protection 13
- ► E. Stand-Alone Installation 13
- F. Moisture Resistance 14

4 Appliance Preparation
- A. Securing and Leveling Appliance 15
- B. Flashing 15

5 Electrical Information
- A. Wiring Requirements 16
- B. IntelliFire Pilot Ignition System Wiring 16
- C. Installing the Electrical 16
- D. Wall Switch Control Assembly 19

6 Gas Information
- A. Valve Access 20
- B. Gas Pressure 20
- C. Gas Connection and Gas Line Purging 21
- D. Fuel Conversion 21
- E. High Altitude Installations 21

7 Finishing
- A. Facing Material 22

8 Appliance setup
- A. Remove the Shipping Materials 24
- B. Clean the Appliance 24
- C. Optional Accessories 24
- D. Verify Pilot Shield 24
- E. Install Deflection Glass 24
- F. Install Clear Crystal Media 24
- G. Remove Media Placement Template 24

9 Reference Materials
- ► A. Accessories 25
- B. Addendum 26

Standard Work Checklist

Attention Installer:

Follow this Standard Work Checklist

This standard work checklist is to be used by the installer in conjunction with, not instead of, the instructions contained in this installation manual

Customer:	_____	Date Installed:	_____
Lot/Address	_____	Location of fireplace	_____
	_____	Installer	_____
	_____	Dealer/Distributor Phone #	_____
Model	ODLANAIGST-48, ODLANAIGST-60	Serial #	_____

WARNING! Risk of Fire or Explosion! *Failure to install appliance according to these instructions could lead to a fire or explosion.*

Appliance Install Section 3 & 4	**YES**	**IF NO, WHY?**
Required non-combustible board is installed.	❑	_____
Verified clearances to combustibles.	❑	_____
Fireplace is leveled and secured.	❑	_____
Electrical Section 5		
Unswitched power (110-120Vac.) provided to the appliance.	❑	_____
Switch wires properly installed.	❑	_____
Gas Section 6		
Proper appliance for fuel type.	❑	_____
Was a conversion performed?	❑	_____
Leak check performed and inlet pressure verified.	❑	_____
Finishing Section 7		
Combustible materials not installed in non-combustible areas.	❑	_____
Verified all clearances meet installation manual requirements.	❑	_____
Mantels and wall projections comply with installation manual requirements.	❑	_____
Appliance Setup Section 8		
All packaging and protective materials removed (inside and outside of appliance)	❑	_____
Media installed correctly.	❑	_____
Optional screen or trim kit properly installed.	❑	_____
Manual bag and all of its contents are removed from inside/under the appliance and given to party responsible for use and operation.	❑	_____
Started appliance and verified no gas leak exists.	❑	_____

Hearth & Home Technologies recommends the following:

- Photographing the installation and copying this checklist for your file.
- That this checklist remain visible at all times on the appliance until the installation is complete.

Comments: Further description of the issues, who is responsible (Installer/Builder/Other trades, etc.) and corrective action needed_____

_____

_____

Comments Communicated to party responsible _____ by _____ on _____

(Builder/Gen. Contractor) **(Installer)** **(Date)**

1 Product Specific Information

A. Appliance Certification

Model: **ODLANAIGST-48, ODLANAIGST-60**
Laboratory: Underwriters Laboratories(UL)
Type: Outdoor Decorative Gas Appliances
Standard: ANSI Z21.97-2017, CSA 2.41-2017

This product is listed to ANSI standards for "Outdoor decorative Gas appliances" and "Gas Fired Appliances for Use at High Altitudes".

Notice: *This installation must conform with local codes. In the absence of local codes you must comply with the National Fuel Gas Code, ANSI Z223.1- latest edition in the U.S.A. and the CAN/CGA B149 Installation codes in Canada.*

When an appliance is for connection to a fixed piping system, the installation must conform with local codes, or in the absence of local codes with the ***National Fuel Gas Code, ANSI Z223.1/NFPA 54, or International Fuel Gas Code.***

B. BTU Specifications

Model	Gas Type	Max Input BTU	Orifice Size
ODLANAIGST-48	Natural	55,000	#26 (.147) 3.73 mm
	Propane	55,000	#42 (.093) 2.36 mm
ODLANAIGST-60	Natural	65,000	#23 (.154) 3.91 mm
	Propane	65,000	#39 (.099) 2.51 mm

C. High Altitude Installations

Notice: If the heating value of the gas has been reduced, these rules do not apply. Check with your local gas utility or authorities having jurisdiction.
When installing above 2000 feet elevation:

- In the USA: reduce input rate 4% for each 1000 feet above 2000 feet.
- In CANADA: Input ratings are certified without a reduction of input rate for elevations up to 4500 feet (1350m) above sea level. Please consult provincial and/or local authorities having jurisdiction for installations at elevations above 4500 feet (1370m.)

Check with your local gas utility to determine proper orifice size.

D. Non-combustible Materials Specification

Material which will not ignite and burn. Such materials are those consisting entirely of steel, iron, brick, tile, concrete, slate, glass, plasters or any combination thereof.
Materials that are reported as passing **ASTM E 136, Standard Test Method for Behavior of Materials in a Vertical Tube Furnace at 750 °C** shall be considered non-combustible materials.

E. Combustible Materials Specification

Materials made of or surfaced with wood, compressed paper, plant fibers, plastics, or other material that can ignite and burn, whether flame proofed or not, or plastered or unplastered shall be considered combustible materials.

F. Electrical Codes

Notice: This appliance must be electrically wired and grounded in accordance with local codes or, in the absence of local codes, with **National Electric Code ANSI/NFPA 70-latest edition** *or the* **Canadian Electrical Code CSA C22.1.**

- A 110-120Vac. circuit for this product must be protected with ground-fault circuit-interrupter protection, in compliance with the applicable electrical codes.

G. Fuel

This appliance must not be used to burn solid fuel. When an appliance is connected to a fixed piping system, the installation must conform with local codes, or in the absence of local codes with the **National Fuel Gas Code, ANSI Z223.1/NFPA 54,** *or* **International Fuel Gas Code.**

⚠ WARNING: This product and the fuels used to operate this product (liquid propane or natural gas), and the products of combustion of such fuels, can expose you to chemicals including benzene, which is known to the State of California to cause cancer and reproductive harm. For more information go to: www.P65Warnings.ca.gov.

A. Design and Installation Considerations

The Lanai series gas appliance is designed for outdoor use and may be installed as a stand alone unit or built into a wall.

Outdoor spaces - For the purpose of these instructions, an appliance is considered to be outdoors if installed with shelter no more inclusive than:

1. With walls on all sides, but no overhead cover
2. Within a partial enclosure which includes an overhead cover and no more than two side walls. These side walls may be parallel, as in a breezeway, or at right angles to each other; or
3. Within a partial enclosure which includes an overhead cover and three sidewalls, as long as 30 % or more of the horizontal periphery of the enclosure is permanently open. See Addendum on page 26.

NOTE: Screen may be used on the open sides of the shelter. 14x18 and 16x18 screen mesh is approved for use. DO NOT use solar screen or no-see-um screen.

Install on wood, composite or non-combustible continuous flat surface, extending full width and depth of the appliance to prevent damage.

Refer to section three for clearances.

Installation MUST comply with local, regional, state and national codes and regulations. Consult the authorities having jurisdiction over restrictions, installation inspection and permits.

Before installing, determine the following:

- Where the appliance is to be installed.
  - Clearances to side walls.
  - Location of indoor appliance terminations, air inlets, gas meters, etc.
  - Location of the appliance to a door that swings open to ensure it doesn't interfere with the appliance when opened
  - Location of Windows.
  - Location of Walkways.
  - Possibility of flooding or running water.
- Gas supply piping requirements.
- Electrical wiring requirements.
- Framing and finishing details.

B. Tools and Supplies Needed

Before beginning the installation be sure that the following tools and building supplies are available.

Tape Measure	Framing material
Pliers	Hammer
Phillips screwdriver	Manometer
Gloves	Framing square
Voltmeter	Electric drill and bits (1/4 inch)
Plumb line	Safety glasses
Level	Reciprocating saw
3/4 inch wrench	Crescent wrench
7/8 inch wrench	1/4 inch nut driver
7/16 inch wrench	pipe sealant
Flat head screwdriver	

Non-corrosive leak check solution
1/2 - 3/4 inch length, #6 or #8 Self-drilling screws
Caulking material (300°F Minimum continuous exposure rating.)

myhht FACTORY training

Installation and service of this appliance should be performed by qualified personnel. Hearth & Home Technologies recommends HHT Factory Trained or NFI certified professionals

NATIONAL FIREPLACE INSTITUTE NFI CERTIFIED

Improper installation, adjustment, alteration, service or maintenance can cause injury or property damage. For assistance or additional information, consult a qualified service technician, service agency or your dealer.

NOTE: Installation and repair should be done by a qualified service person. The appliance should be inspected before use and at least annually by a qualified service person. More frequent cleaning may be required as necessary. It is imperative that the control compartment, burners, and circulating air passageways of the appliance are kept clean.

C. Inspect Appliance and Components

- Carefully remove the appliance and components from the packaging.
- Remove non-combustible material and eyebrow located on the inside of the appliance.
- Remove crystal media which is packaged separately and located on top of the appliance.
- Remove wall control which is packaged separately and located on top of the appliance.
- Remove protective coating.
- Report any components damaged in shipping to your dealer.
- Read all of the instructions before starting the installation. Follow these instructions carefully during the installation to ensure maximum safety and benefit.

WARNING! Risk of Fire or Explosion! *Damaged parts could impair safe operation.* ***DO NOT*** *install damaged, incomplete or substitute components.*

Hearth & Home Technologies disclaims any responsibility for, and the warranty will be voided by, the following actions:

- Installation and use of any damaged appliance.
- Modification of the appliance.
- Installation other than as instructed by Hearth & Home Technologies.
- Improper positioning of the media.
- Installation and/or use of any component part not approved by Hearth & Home Technologies.

Any such action may cause a fire hazard.

WARNING! Risk of Fire, Explosion or Electric Shock!
DO NOT *use this appliance if any part has been under water. Call a qualified service technician to inspect the appliance and to replace any part of the control system and/or gas control which has been under water.*

3 Framing and Clearances

A. Appliance Dimension/Weight Diagrams

Dimensions are actual appliance dimensions. Use for reference only. For framing dimensions and clearances refer to Figure 3.3, 3.4 and 3.5.

Appliance Weight

Model	Pounds
ODLANAIGST-48	210

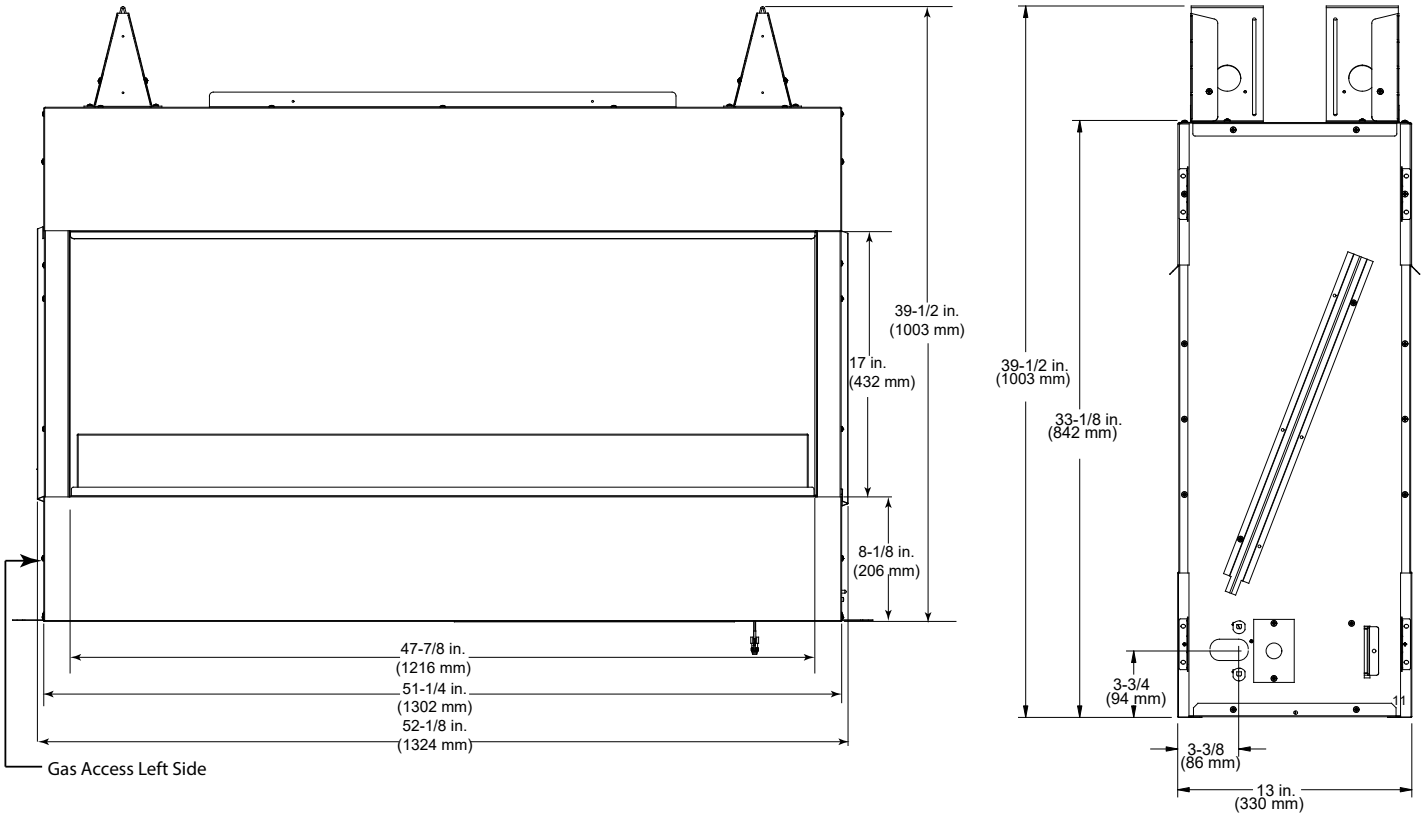

Figure 3.1. Appliance Dimensions – ODLANAIGST-48

MODEL	FRONT WIDTH		BACK WIDTH		HEIGHT		DEPTH		VIEWING AREA
	Actual	Framing	Actual	Framing	Actual	Framing	Actual	Framing	
ODLANAIGST-48	52-1/8” 1324 mm	52-5/8” 1337 mm	52-1/8” 1324 mm	52-5/8” 1337 mm	39-1/2” 1003 mm	39-3/4” 1009 mm	13” 330 mm	11-5/8” 295 mm	47-7/8 “ x 17” 1216 x 432 mm

Appliance Weight

Model	Pounds
ODLANAIGST-60	240

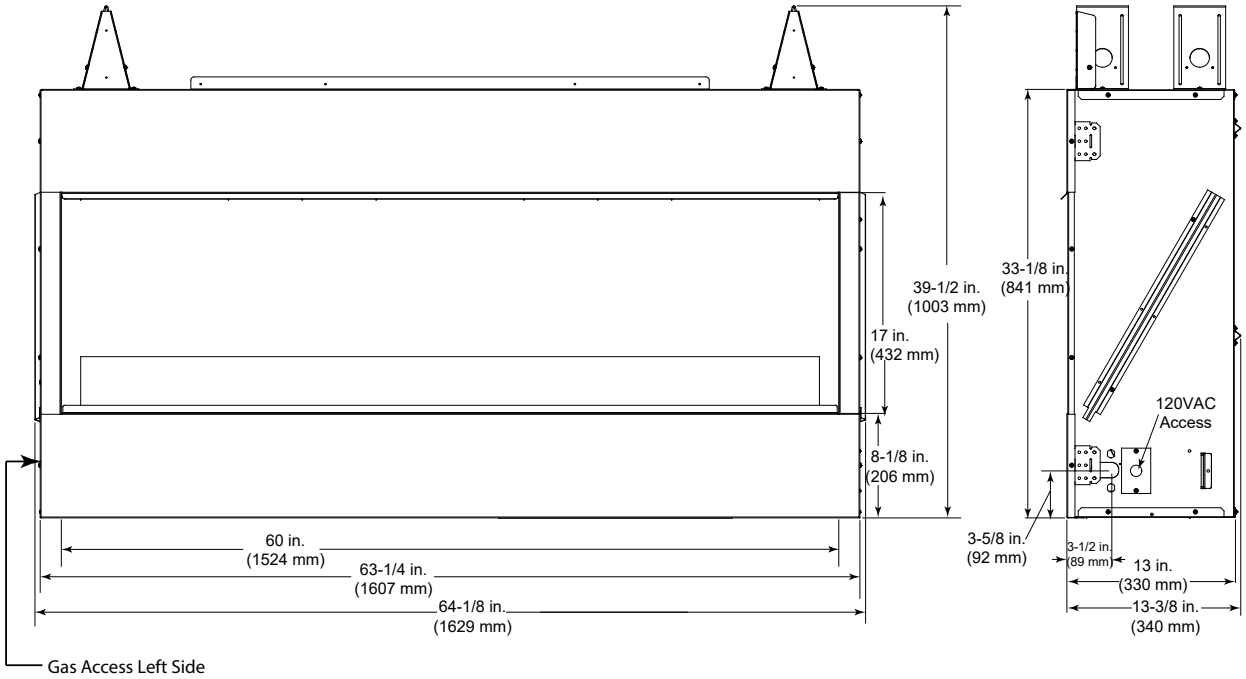

Figure 3.2. Appliance Dimensions – ODLANAIGST-60

MODEL	FRONT WIDTH		BACK WIDTH		HEIGHT		DEPTH		VIEWING AREA
	Actual	Framing	Actual	Framing	Actual	Framing	Actual	Framing	
ODLANAIGST-60	64-1/8” 1629 mm	64-5/8” 1641 mm	64-1/8” 1629 mm	64-5/8” 1641 mm	39-1/2” 1003 mm	39-3/4” 1009 mm	13” 330 mm	11-5/8” 295 mm	59-7/8 “ x 17” 1521 x 432 mm

B. Clearances to Combustibles

When selecting a location for the appliance, it is important to consider the required clearances to walls (see Figure 3.3, 3.4, 3.5 and 3.6.)

WARNING! Risk of Fire or Burns! *Provide adequate clearance around air openings and for service access. Due to high temperatures, the appliance should be located out of traffic and away from furniture and draperies.*

WARNING! Risk of Fire or Burns! The appliance is hot and wind may cause flames to reach out in front.

- Keep furniture, draperies and other combustibles away.
- Locate the appliance away from traffic areas.
- Clean up fallen leaves, branches and other combustible materials before using the appliance.
- See Figure 3.3, 3.4, 3.5 and 3.6 for required clearances.
- Install on wood, composite or non-combustible continuous flat surface, extending full width and depth of the appliance to prevent damage.

WARNING! Risk of Fire! *Maintain specified air space clearances to appliance:*

- *Insulation and other materials must be secured to prevent accidental contact.*
- The chase/enclosure must be properly blocked to prevent blown insulation or other combustibles from entering and making contact with the appliance.
- Failure to maintain air space may cause overheating and a fire.

ODLANAIGST-48

NOTICE: Illustrations reflect typical installations and are FOR DESIGN PURPOSES ONLY. Illustrations/ diagrams are not drawn to scale. Actual installation may vary due to individual design preference.

Note: For actual appliance dimensions refer to Section 3.A.

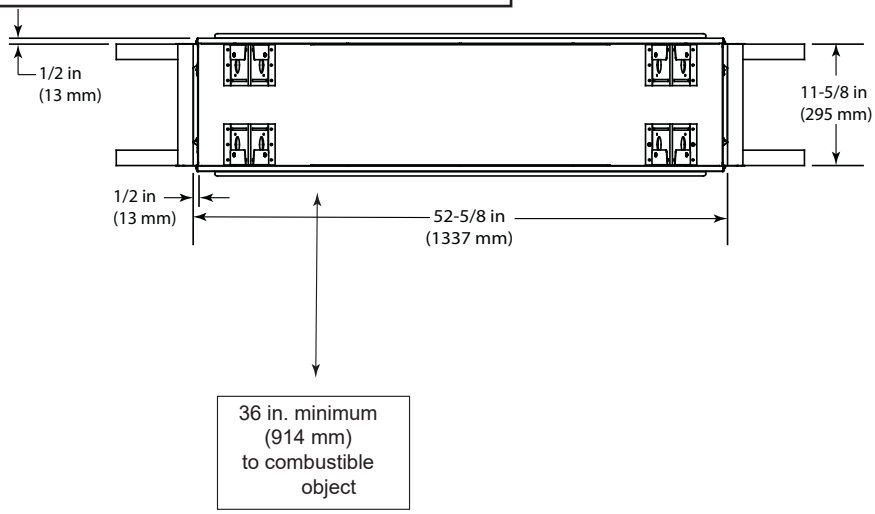

Notice: Flash the perimeter of the appliance, corners and the appliance face in a manner consistent with regional practices as required to prevent water penetration around the appliance. See Section 3.E. for more information regarding wall and enclosure construction.

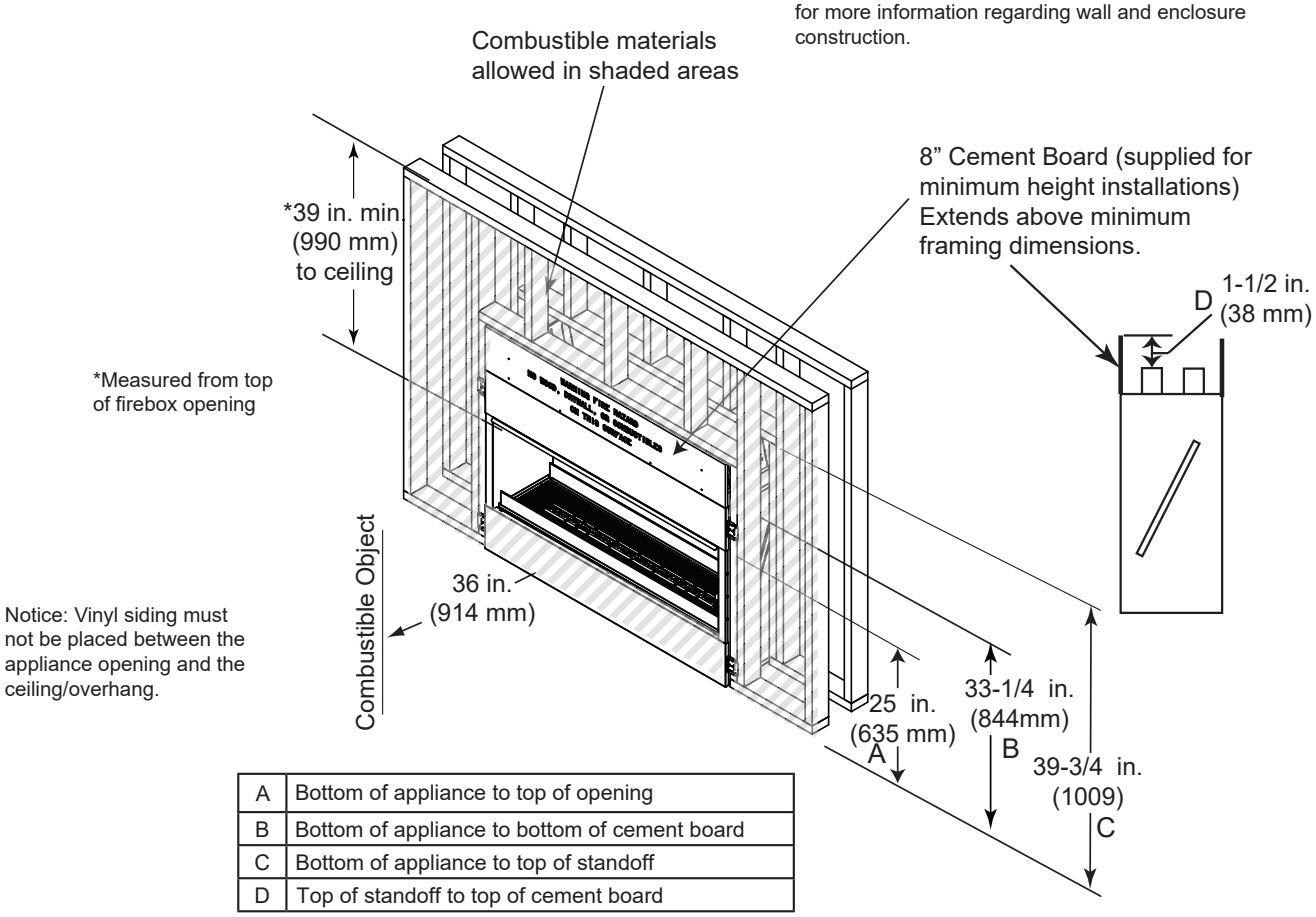

A	Bottom of appliance to top of opening
B	Bottom of appliance to bottom of cement board
C	Bottom of appliance to top of standoff
D	Top of standoff to top of cement board

Figure 3.3. Appliance Locations and Framing Dimensions - ODLANAIGST-48

ODLANAIGST-60

NOTICE: Illustrations reflect typical installations and are FOR DESIGN PURPOSES ONLY. Illustrations/ diagrams are not drawn to scale. Actual installation may vary due to individual design preference.

Note: For actual appliance dimensions refer to Section 3.A.

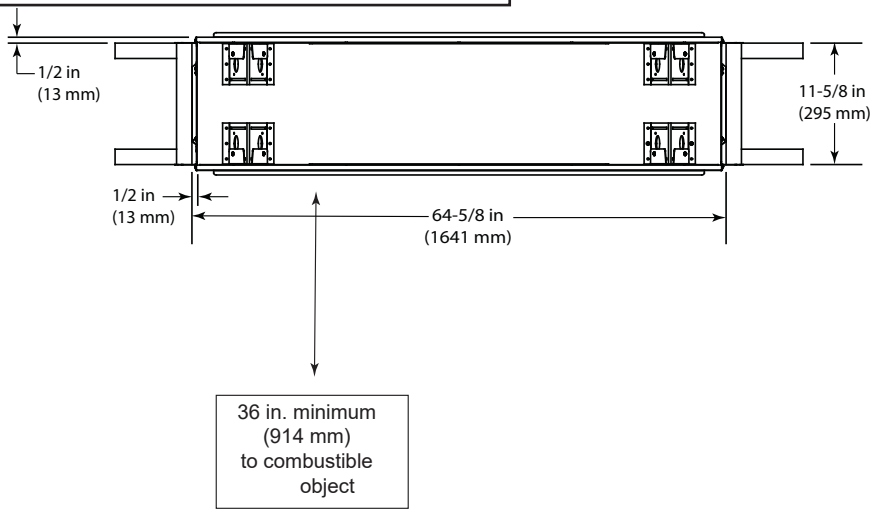

Notice: Flash the perimeter of the appliance, corners and the appliance face in a manner consistent with regional practices as required to prevent water penetration around the appliance. See Section 3.E. for more information regarding wall and enclosure construction.

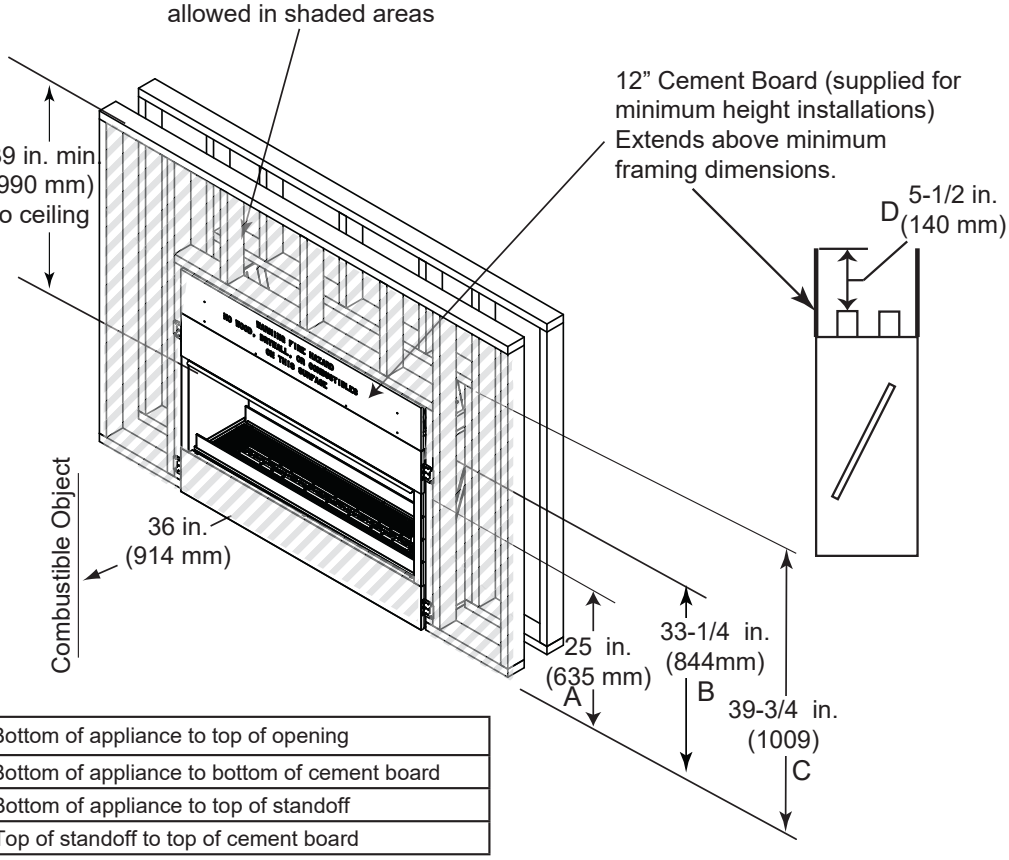

Notice: Vinyl siding must not be placed between the appliance opening and the ceiling/overhang.

A	Bottom of appliance to top of opening
B	Bottom of appliance to bottom of cement board
C	Bottom of appliance to top of standoff
D	Top of standoff to top of cement board

Figure 3.4. Appliance Locations and Framing Dimensions - ODLANAIGST-60

C. Vent Minimum Clearances

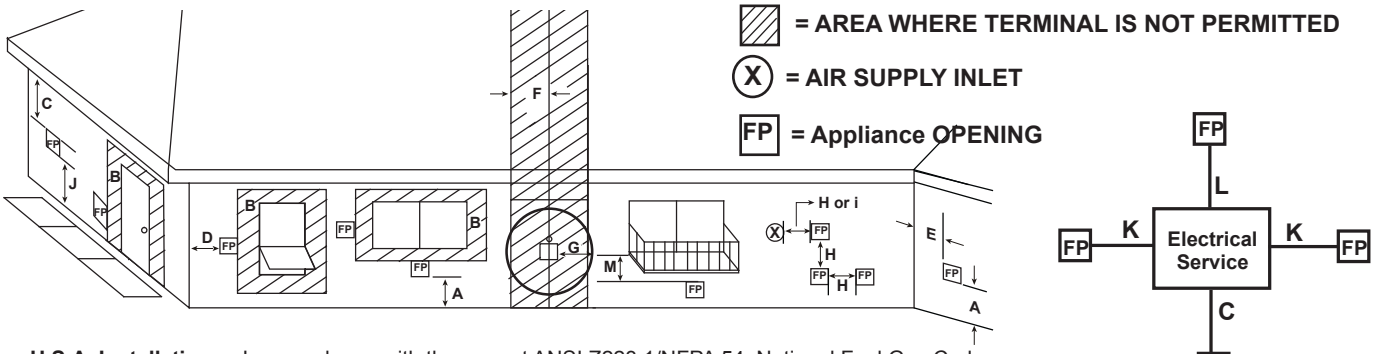

U.S.A. Installations: In accordance with the current ANSI Z223.1/NFPA 54, National Fuel Gas Code.
Canadian Installations: In accordance with the current CSA B149.1, Natural Gas and Propane Installation Code.

			U.S.A.	CANADA
A	Clearance above grade,veranda, porch, deck, or balcony		0 in. (0 cm)	0 in. (0 cm)
B	Clearance to window or door that may be opened, or to permanently closed window	Non-vinyl	12 in. (305 mm)	12 in. (305 mm)
		Vinyl	24 in. (610 mm)	24 in. (610 mm)
C	clearance below unventilated soffit		39 in. (990 mm)	39 in. (990 mm)
	clearance below ventilated soffit		39 in. (990 mm)	39 in. (990 mm)
	clearance below any vinyl soffits and electrical service		60 in. (1524 mm)	60 in. (1524 mm)
D	clearance to outside corner		9 in. (229 mm)	9 in. (229 mm)
E	clearance to inside corner	Non-vinyl siding (1 side)	4 in. (102 mm)	4 in. (102 mm)
		Non-Vinyl siding (Alcove)	8 in. (203 mm)	8 in. (203 mm)
		Vinyl siding & windows	48 in. (1219 mm)	48 in. (1219 mm)
F	not to be installed above a gas meter/regulator assembly within 3 feet horizontally from the center-line of the regulator		3 ft (914 mm)	3 ft (914 mm)
G	clearance to gas service regulator vent outlet		3 ft (914 mm)	3 ft (914 mm)
H	clearance to non-mechanical air supply inlet to building or the combustion air inlet to any other appliance termination (mechanical or non-mechanical)		12 in. (305 mm)	12 in. (305 mm)
I	clearance to a mechanical (powered) air supply inlet ***(All mechanical air intakes within 10 feet of a horizontal termination cap must be a minimum of 3 feet below termination.)		3 ft (914 mm)***	6 ft (1829 mm)
J	For appliances installed facing or opening onto public property or property servicing more than one single family dwelling, such as driveways, sidewalks, etc. refer to local building codes/regulations for proper clearances.		Refer to local codes	Refer to local codes
K	clearance from sides of electrical service		24 in. (610 mm)	24 in. (610 mm)
	Location of the vent termination must not interfere with access to the electrical service.			
L	clearance above electrical service		12 in. (305 mm)	12 in. (305 mm)
	Location of the vent termination must not interfere with access to the electrical service.			
M	clearance under veranda, porch, deck, balcony or overhang (Permitted only if the area meets the requirements of an outdoor space as defined in section 2.A "Design and Installation Considerations")		39 in. (990 mm)	39 in. (990 mm)
	vinyl or composite overhang		72 in. (1829 mm)	72 in. (1829 mm)

Figure 3.5 Minimum Clearances

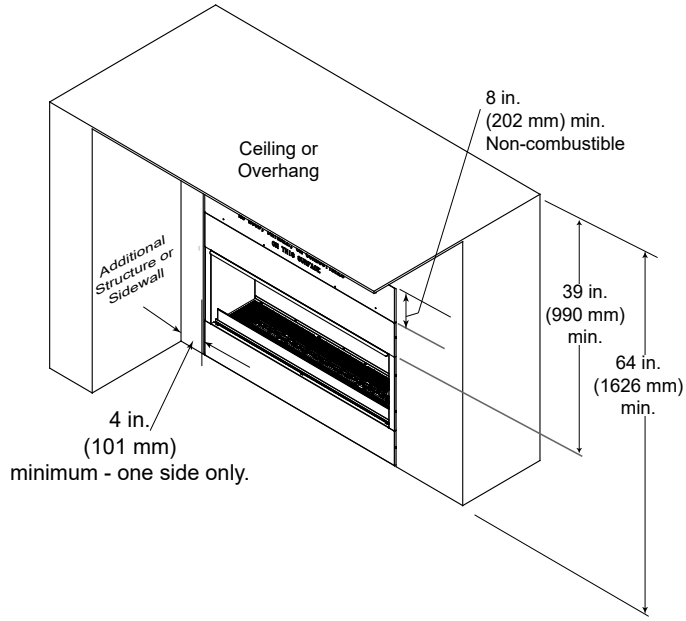

Figure 3.6 Clearances to Combustibles

WARNING! Risk of Fire! *Comply with all minimum clearances to combustibles as specified. Framing or finishing material closer than the minimums listed must be constructed entirely of non-combustible materials (i.e., steel studs, concrete board, etc).*

D. Hearth Extension/Floor Protection

This application does not require a hearth extension.

E. Stand-Alone Installation

This appliance may be installed as a stand-alone unit.

- Construct a stand-alone framing of combustible or noncombustible materials.
- Cement board or other noncombustible material can be applied directly to the face of the appliance.
- Tape and seal all joints and corners.
- Provide proper flashing and moisture management if installed on surfaces that may rot or otherwise be damaged by water. (See also Section 4.B.)

- **Built-in Installation**

When this appliance is installed into a wall, we recommend that the wall be an exterior wall system.

- See framing measurements in Figure 3.3, 3.4 and 3.6.
- You must maintain ½ in. air space at the sides. See Figure 3.3 and 3.4
- The header must not be placed below the top of the top standoffs.
- Noncombustible wall sheathing material is required 8” above the appliance. (See Figure 3.6)
- An 8” tall cement board has been provided for this installation.

Flash the perimeter of the appliance, corners and the appliance face in a manner consistent with regional practices as required to prevent water penetration around the appliance. See Section 3B and Figure 3.5 and 3.6 for more information regarding wall and enclosure construction.

F. Moisture Resistance

This outdoor appliance will shed moderate amounts of water, but is not waterproof. This appliance must be enclosed or covered with noncombustible finish material and all joints sealed to prevent water infiltration.

The firebox will not perform as an exterior wall. Moisture penetration must be considered for construction that places the appliance in structure walls or on moisture sensitive surfaces.

When installed on exterior walls: Hearth & Home Technologies recommends that the chase be constructed outside the structure's weather envelope. Where the platform meets the wall, use a flashing detail similar to that required for attached decks. Chase platforms, including hearths should slope away from the structure at 1/8 in. to 1/4 in. per foot. The appliance can be shimmed level.

Water Drainage: The Lanai is designed to operate outdoors experiencing rain and other sources of moisture that will enter the firebox. The unit has built-in drain holes in the base which will allow moisture to pass through the bottom of the enclosure. When constructing the enclosure, the builder must provide a means of draining water from under the unit and out of the structure. This can be achieved by properly positioned drain holes, slots or other means to allow water to exit at the lowest grade of the structure. Choosing the location of the unit is also important so that an area that may experience excessive water flow or standing water is avoided. In some cases a drain pan is needed to ensure proper drainage. This can be constructed from a corrosion resistant metal, or suitable material for outdoor use with a water resistant membrane. A slope of 1/4" per foot toward the drain ports of the structure is recommended. A drain pan can also be purchased (ODLANAIG-48DP) for the 48 inch appliance or (ODLANAIG-60DP) for the 60 inch appliance.

A. Securing and Leveling Appliance

CAUTION! Risk of cuts, abrasions or flying debris. *Wear protective gloves and safety glasses during installation. Sheet metal edges are sharp.*

Position, level and secure the appliance.

- Install on wood, composite or non-combustible continuous flat surface, extending full width and depth of the appliance to prevent damage.
- Level the appliance from side to side and front to back.
- Shim the appliance with noncombustible material, such as sheet metal, as necessary.
- Chase platforms, including hearths, should slope away from the structure at 1/8 inch to 1/4 inch per foot.
- Nailing tabs must be moved from shipping position to installation position and secured to framing. Bend the four nailing tabs out on each side. See Figure 4.1.

B. Flashing

- Flash the appliance in a manner consistent with regional practices to prevent water penetration around the appliance. Due to elevated temperatures across the top of the appliance, metal flashing and high temperature sealant must be used. Adhesive polymers flashing materials may melt.
- For brick, stone, stucco and similar construction, weep screeds should be installed per regional codes.
- See Section 3.F., Figures 3.3 and 3.4. for more information regarding wall and enclosure construction required to prevent moisture penetration into the structure. The appliance will shed moderate amounts of water but is not waterproof.

NOTE: Use high temp silicone or sealant recommended by the manufacturer of the house wrap to seal between combustible sheathing house wrap and non-combustible sheathing. The sealant material used within 6 inches of the top and 1 inch on the sides of the appliance surround must be approved to withstand a minimum temperature of 225°F continuous exposure.

House wrap tape with a 225°F minimum temperature may also be used. See Figure 4.2.

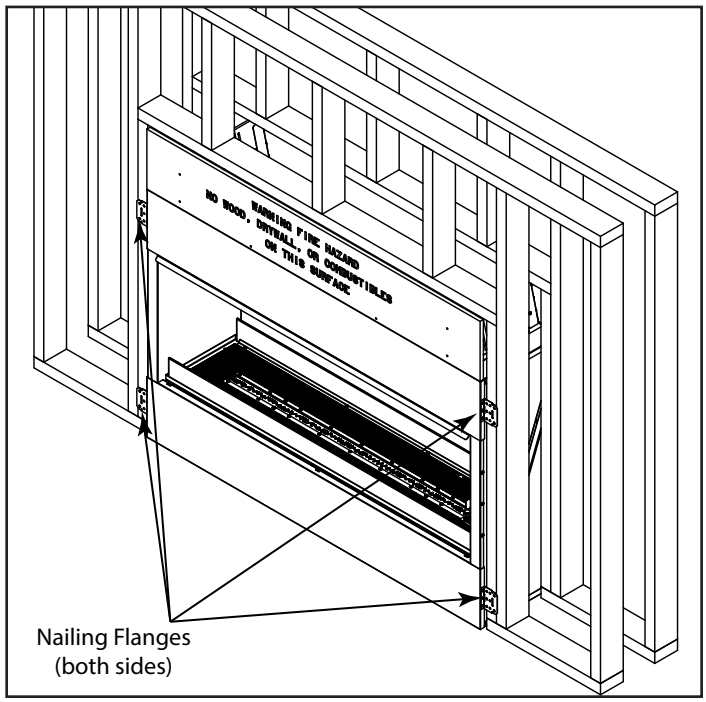

Figure 4.1. Positioning and Securing Nailing Tab

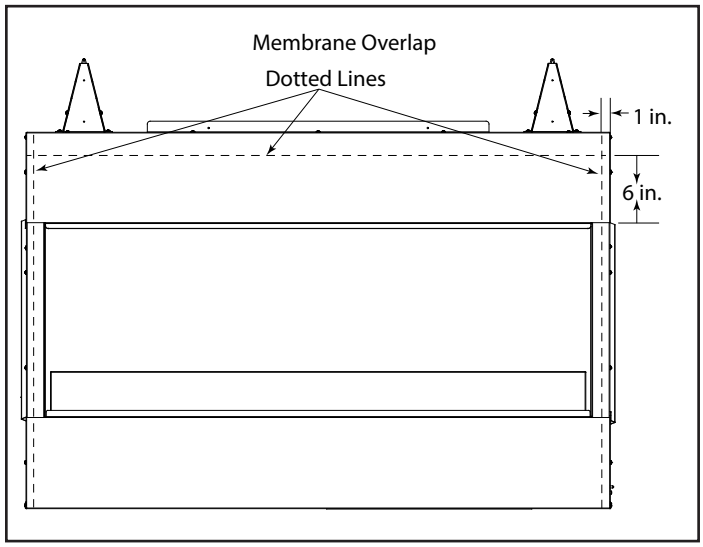

Figure 4.2. Membrane Overlap

5 Electrical Information

A. Wiring Requirements

Note: The Lanai appliance **MUST** be connected to a GFCI (Ground Fault Circuit Interrupt) protected circuit breaker.

WARNING! Risk of Shock or Explosion! DO NOT *wire 110-120 Vac. to the valve or to the appliance wall switch. Incorrect wiring will damage controls.*

NOTICE: *This appliance must be electrically wired and grounded in accordance with local codes, or in the absence of local code, with* **National Electric Code ANSI/NFPA 70-latest edition** *or the* **Canadian Electric Code CSA C22.1.**

Total Electrical Requirements: 110-120Vac., 60Hz., less than 12 Amperes.

- Wire the appliance junction box to unswitched 110-120Vac. This is required for proper operation of the appliance.
- A 110-120Vac. circuit for this appliance must be protected with ground-fault circuit-interrupter protection in compliance with the applicable electrical codes.
- Low voltage and 110-120 VAC voltage cannot be shared within the same wall box.

Electrical Service and Repair

WARNING! Risk of Shock! *Label all wires prior to disconnection when servicing controls. Wiring errors could cause improper and dangerous operation. Verify proper operation after servicing.*

B. IntelliFire Pilot Ignition System Wiring

- Wire the appliance junction box to 110-120Vac. for proper operation of the appliance.

WARNING! Risk of Shock or Explosion! DO NOT *wire IPI controlled appliance junction box to a switched circuit. Incorrect wiring will override IPI safety lockout.*

THIS APPLIANCE IS SUPPLIED STANDARD WITH:

- IntelliFire control valve (3V)
- Wall switch Control – Operates unit On/Off and LED lights.
- Two (2) LED outdoor rated light strips (12V)
- Conductor wall switch wire

C. Installing the Electrical

The Lanai is supplied with the junction box located on the right side of the appliance. There is no option to relocate junction box to the left side of the appliance.

Wiring Junction Box

- Remove (2) screws securing junction box access panel. See Figure 5.1.

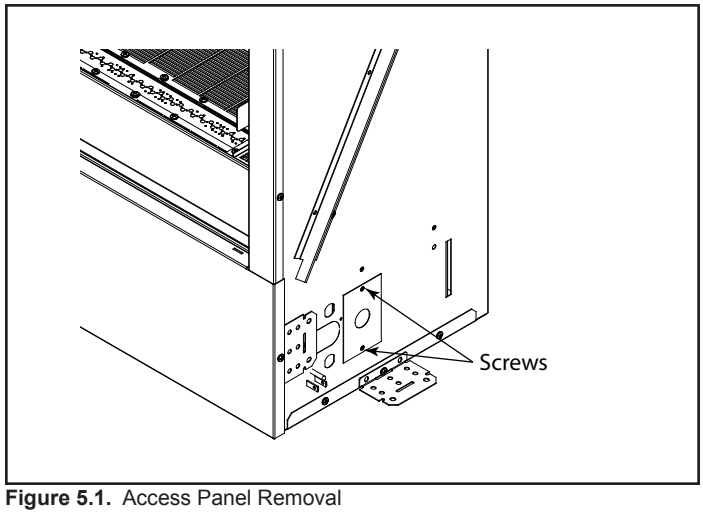

Figure 5.1. Access Panel Removal

- Unplug transformer and power supply.
- Disassemble junction box. See Figure 5.2.

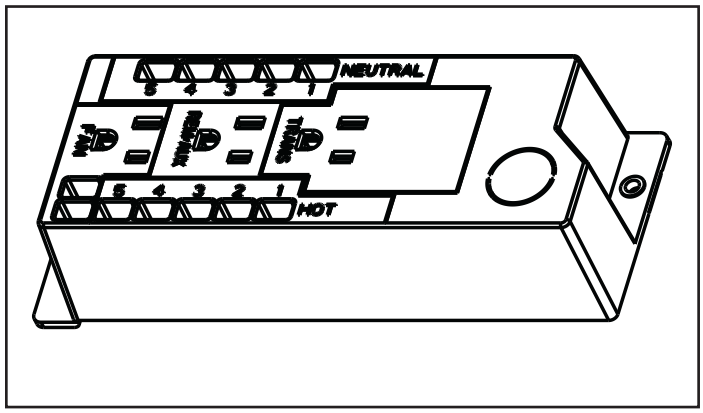

Figure 5.2. Junction Box

- Wire junction box and reassemble. See Figure 5.3.

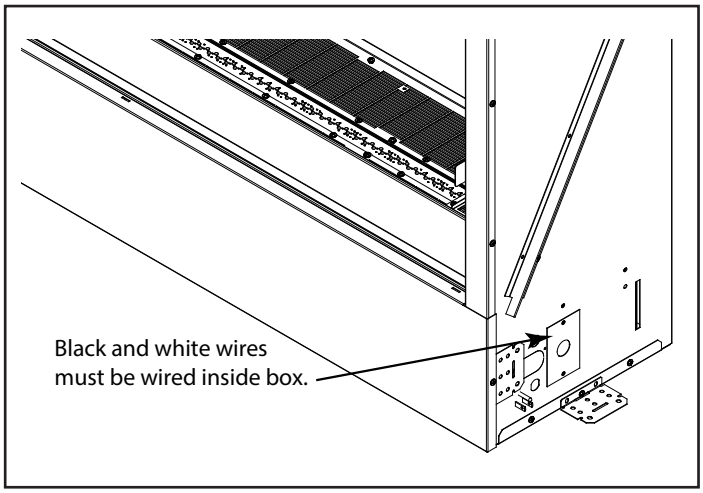

Figure 5.3. Wire Junction Box

- Plug in transformer and power supply to junction box. See Figure 5.4.

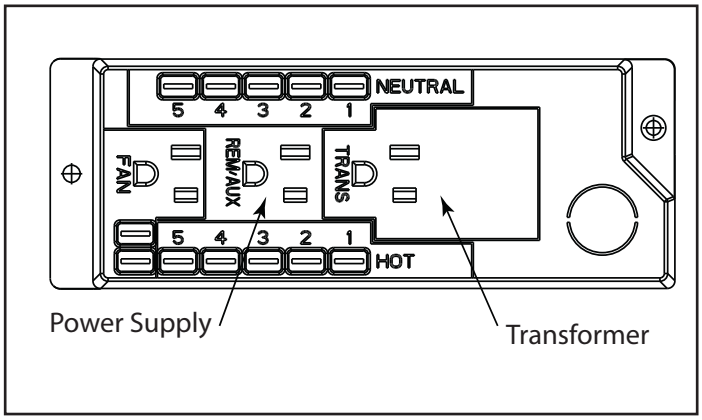

Figure 5.4. Power Supply

Wiring Diagram

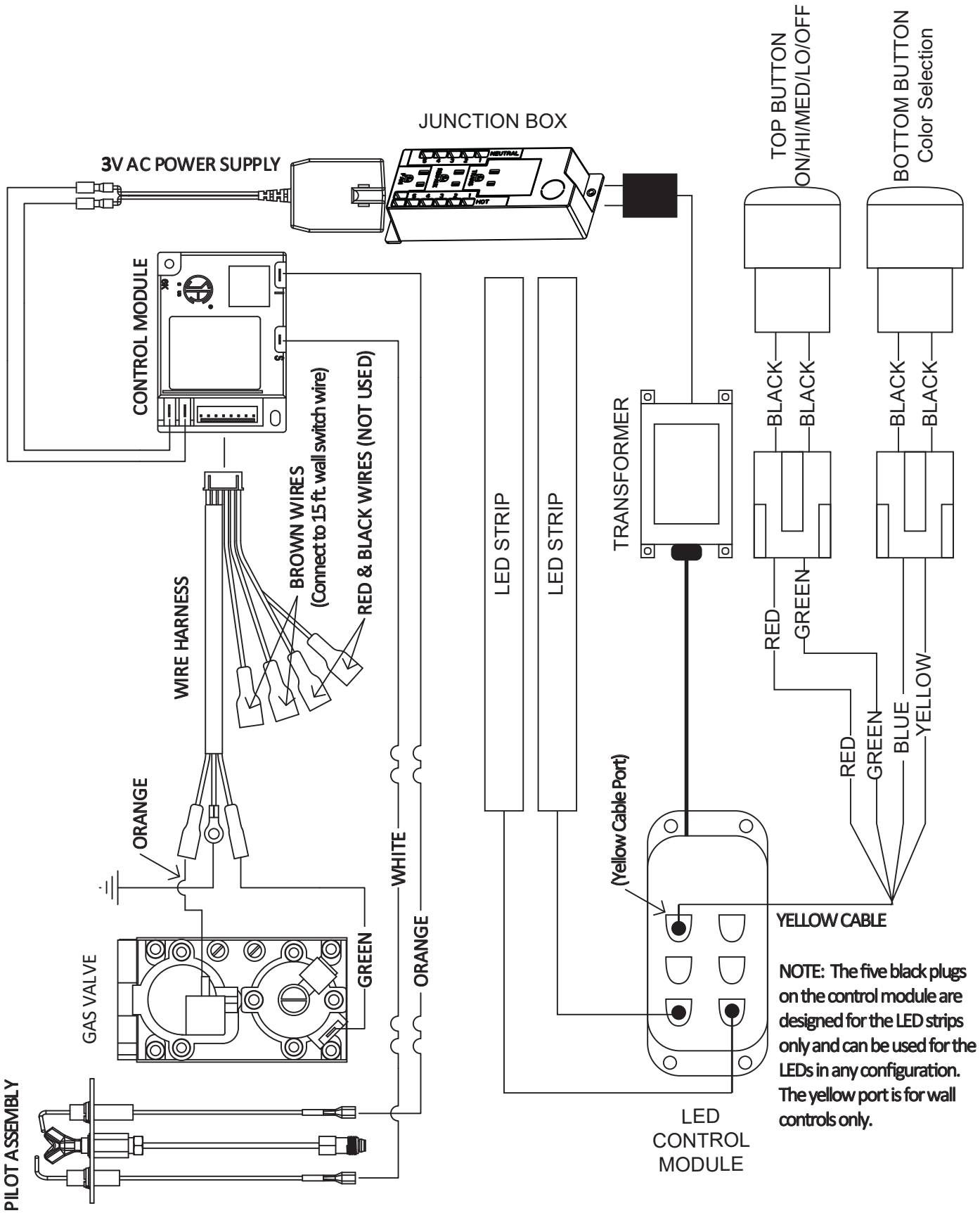

Figure 5.5. Wiring Diagram

D. Wall Switch Control Assembly

The Lanai series outdoor gas appliance is supplied with a wall switch control panel. See Figure 5.6.

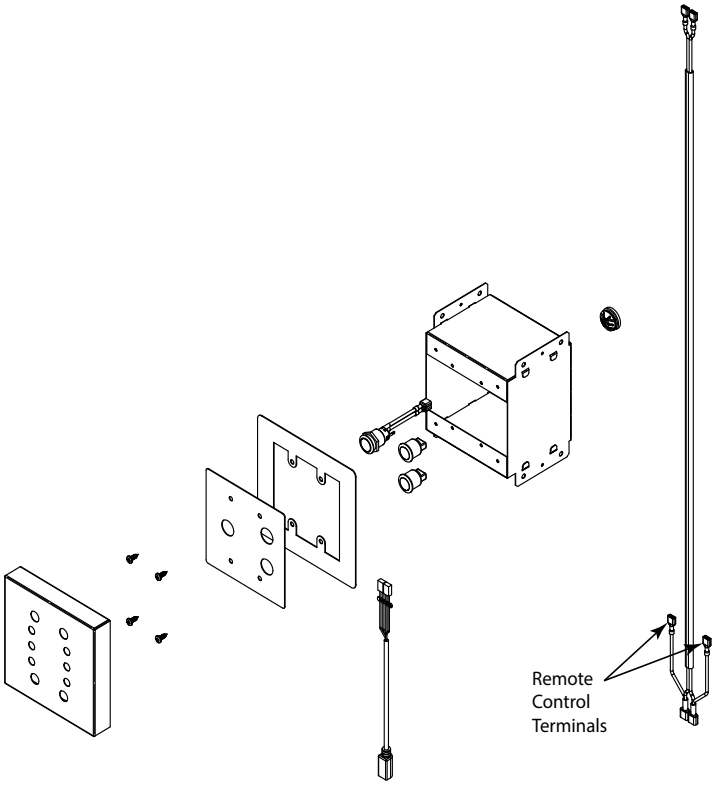

Figure 5.6. Wall Control Switch Assembly

NOTE: Supplied wire allows for the control assembly to be mounted up to 14 feet from the appliance. The supplied grommet can be installed on the left or right side of the appliance for wall switch control wire routing.

- The control box can be rerouted on the right or left side of the unit.
- Locate controls by lifting engine and using support legs. To access Intellifire control module and LED control module, lift control box cover off of controls.
- The rocker switch wire (Black/white) must be plugged into the two brown wires on the control wiring harness. There is no incorrect connection for these two wires. Shown in wiring diagram (Figure 5.5.)
- The yellow cable for the two LED buttons plugs into the LED module (Yellow control module) located under the control cover which is under the engine base.
- Using the tabs, mount the wall control switch assembly to a stud within 14' of the appliance.

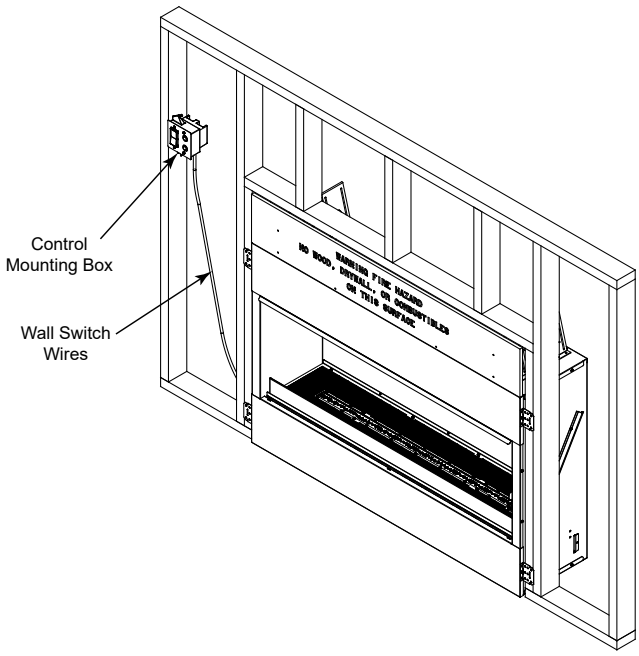

Figure 5.7. Wall Switch Mounting

6 Gas Information

⚠ WARNING

Risk of Fire! Risk of Explosion! Risk of Asphyxiation!

Follow all instructions and warnings for installing and servicing gas line.

- Gas line installation and service must be performed by a qualified installer or licensed plumber in accordance with all applicable codes for the installation location (NFPA 54 / ANSI Z223.1, the current International Fuel Gas Code, or CAN/CSA B149 in Canada) (In the Commonwealth of Massachusetts installation must be performed by a licensed plumber or gas fitter).
- Check all fittings and connections by means of a listed combustible gas detector, a noncorrosive leak detection fluid, or other approved leak detection method. **DO NOT** use open flame.

⚠ WARNING

Risk of Fire! Risk of Explosion!

Pressure exceeding 1/2 PSIG (14 in. w.c. / 3.5 kPa) will damage gas valve control.

- Disconnect appliance and its manual shutoff valve BEFORE line pressure testing.
- Cap outlet on piping system at appliance connection BEFORE line pressure testing.
- Connect appliance AFTER confirming piping system pressure is equal or less than 1/2 PSIG (14 in. w.c. / 3.5 kPa).

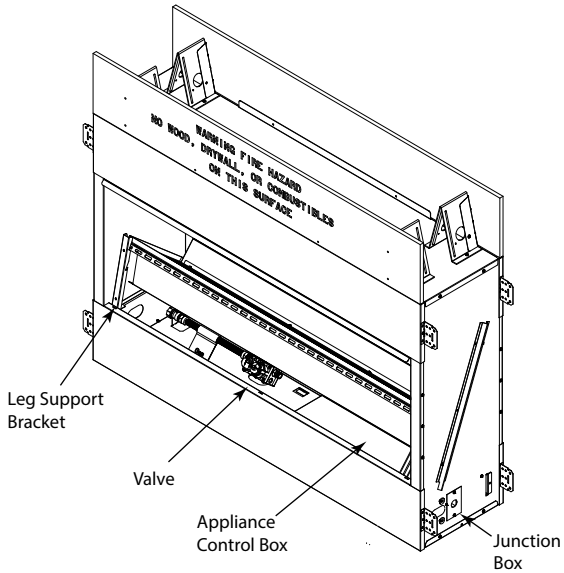

Figure 6.1. Appliance With Engine Lifted

A. Valve Access

The valve and controls are located in the appliance control box. See Figure 6.1.

The control box and controls can be accessed by lifting engine assembly as shown in Figure 6.1

- Make sure appliance is off and cool.
- Remove media and deflection glass panel from hearth pan.
- Remove the 3 or 5 screws (depending on the model) from the back of the hearth pan.
- Lift the front of the burner assembly and place the two leg supports, provided under the Engine, against lower front space at the bottom of the face, and slide into the slots at the bottom of the engine assembly. See Figure 6.1.
- Remove control box cover panel revealing control board if access to any controls is needed.

B. Gas Pressure

- Install pressure regulator upstream of gas valve if line inlet pressure exceeds 1/2 PSIG.
- Recommended inlet pressure for optimal appliance performance: 7.0 in. w.c. (NG) 12.0 in. w.c. (Propane)
- Verify inlet pressure is within specified range, including when other household gas appliances are operating.
- Pressure requirements when in operation are:

Gas Pressure	Natural Gas	Propane
Minimum inlet pressure	5.0 in. w.c.	11 in. w.c.
Maximum inlet pressure	10.5 in w.c.	13 in. w.c.
Manifold pressure	3.5 in. w.c.	10 in. w.c.

Note: A listed (and commonwealth of Massachusetts approved) 1/2 inch (13mm) T-handle manual shut-off valve and flexible gas connector are connected to the 1/2 inch (13mm) control valve inlet.

- **If substituting for these components, please consult local codes for compliance.**

C. Gas Connection and Gas Line Purging

⚠ WARNING

Risk of Fire! Risk of Explosion!

Gas buildup during line connection and purging could ignite.

- Support gas control when attaching pipe to prevent bending gas line.
- Gas line installation and purging of the gas fuel line MUST be performed by a qualified service technician or a licensed plumber in accordance with the applicable gas code for the installation location (NFPA 54 / ANSI Z223.1, the current International Fuel Gas Code, or CAN/CSA B149 in Canada).
- Use a listed combustible gas detector, a noncorrosive leak detection fluid, or other approved leak detection method to check all fittings and connections for gas leaks before lighting the appliance.
- Ensure ventilation
- Eliminate ignition sources, such as sparks or open flames.

- Refer to Section 3 for location of gas line access in appliance.
- The gap between supply piping and gas access hole may be caulked with a minimum of 300°F continuous exposure rating or stuffed with noncombustible, unfaced insulation to help prevent rodents and insects from getting into the control area of the appliance.
- Ensure that gas line does not come in contact with outer wrap of the appliance. Follow local codes.
- Pipe incoming gas line into lower compartment.
- Connect incoming gas line to the 1/2 inch (13mm) connection on the manual shut-off valve.
- A small amount of air will be in the gas supply line and must be purged. Light the appliance to allow air to purge through the pilot assembly.

D. Fuel Conversion

- Make sure the appliance is compatible with available gas types.
- The Lanai series gas appliance is supplied from the factory for use with natural gas. If a Propane(LP) conversion is required, kit LPK-ODLANAIG48 or LPK-ODLANAIG60 must be purchased in order to convert the appliance for use with propane.
- Conversions must be made by a qualified service technician using Hearth & Home Technologies specified and approved parts.

E. High Altitude Installations

Notice: *If the heating value of the gas has been reduced, these rules do not apply. Check with w local gas utility or authorities having jurisdiction.*

When installing above 2000 feet elevation:

- In the USA: Reduce input rate 4% for each 1000 feet above 2000 feet.
- In Canada: Input ratings are certified without a reduction of input rate for elevations up to 4500 feet (1370m) above sea level. Please consult provincial and/or local authorities having jurisdiction for installations at elevations above 4500 feet (1370m.)

Check with your local gas utility to determine proper orifice size. See conversion kit (LPK-ODLANAIG48 or LPK-ODLANAIG60) for instructions on how to change main burner orifice.

A. Facing Material

The fireplace structure can be covered with any noncombustible material. Refer to Section 1.D.

***WARNING! Risk of Fire! DO NOT** apply combustible materials beyond the minimum clearances. Comply with all minimum clearances to combustibles as specified in this manual. Overlapping materials could ignite. Any installation outside the scope as stated in this manual please contact you authorized Hearth & Home Technologies dealer prior to installation.*

Mantel and Wall Projections

***WARNING! Risk of Fire!** Comply with all minimum clearances to combustible as specified. Framing or finishing material closer than the minimums listed must be constructed entirely of noncombustible materials (i.e. steel studs, concrete board, etc.) Figure 7.1 and 7.2 show the dimensions for mantels or other combustible projections above the appliance opening.*

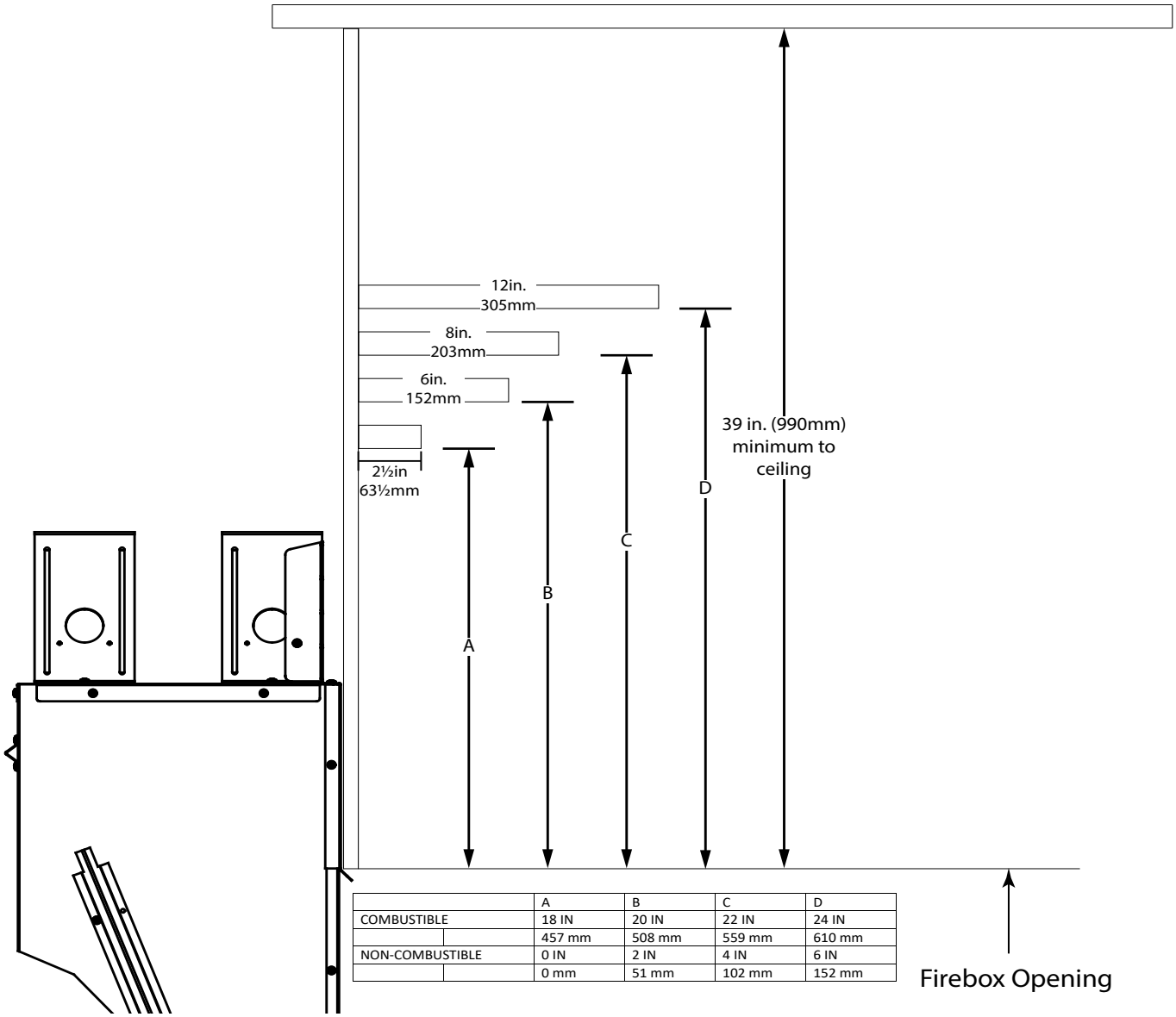

	A	B	C	D
COMBUSTIBLE	18 IN	20 IN	22 IN	24 IN
	457 mm	508 mm	559 mm	610 mm
NON-COMBUSTIBLE	0 IN	2 IN	4 IN	6 IN
	0 mm	51 mm	102 mm	152 mm

Figure 7.1. Minimum vertical and maximum horizontal mantel dimensions for combustible and non-combustible materials.

Good Faith Guidelines for TV Installations above a Typical Gas Fireplace

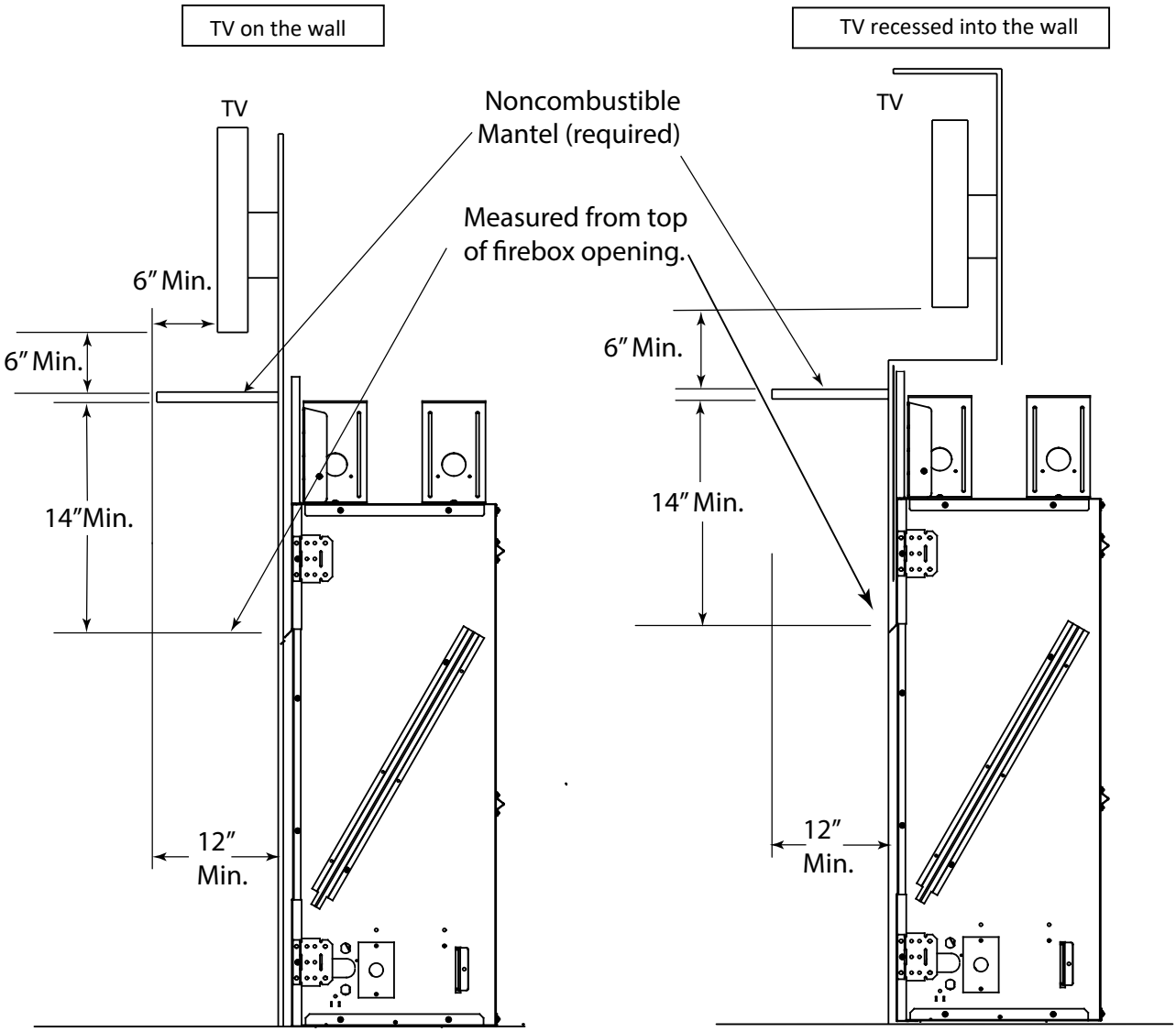

Notes:

1. TV installation as shown requires the mantel be constructed entirely of non-combustible material as it is below the allowable height for a combustible mantel.
2. These are good faith recommended clearances only and not a guarantee of compliance with all TV manufacturers' maximum allowable operating temperatures.
3. Since every home has unique air flow characteristics and maximum allowable operating temperatures can vary from manufacturer to manufacturer and from model to model, actual TV temperatures should be validated at the time of each installation. TVs should not be used in situations where the actual TV temperature exceeds the manufacturers' maximum allowable operating temperatures identified in the TV's technical specifications. Contact the TV's manufacturer directly if you cannot locate this information or have questions regarding the information.
4. Mantel height and depth must conform to mantel requirements specified in the appliance installation manual.

Figure 7.2. Good Faith TV Guidelines

A. Remove the Shipping Materials

Remove the plastic coating and shipping materials from the firebox.
WARNING! Risk of Fire! *Close the ball valve before installing the media template to prevent accidental lighting. Remove the media template before lighting the appliance.*

B. Clean the Appliance

Clean/vacuum any sawdust that may have accumulated inside the firebox.

C. Optional Accessories

Install approved accessories per instructions included with accessories. Contact your dealer for a list of approved accessories.
WARNING! Risk of Fire and Electric Shock! *Use ONLY Hearth & Home Technologies-approved optional accessories with this appliance. Using non-listed accessories could result in a safety hazard and will void the warranty.*

D. Verify Pilot Shield

Ensure proper placement of the pilot shield and media placement template. See Figure 8.1. Shipping could cause then to become displaced.

E. Install Deflection Glass

Deflection glass is stored just inside the firebox under the media. Remove the two screws securing the deflection glass and packaging. Carefully place deflection glass into support bracket provided. See Figure 8.1.

F. Install Clear Crystal Media

Pour crystal media into the hearth area. Cover the entire hearth pan area evenly, including burner area and the pilot cover.

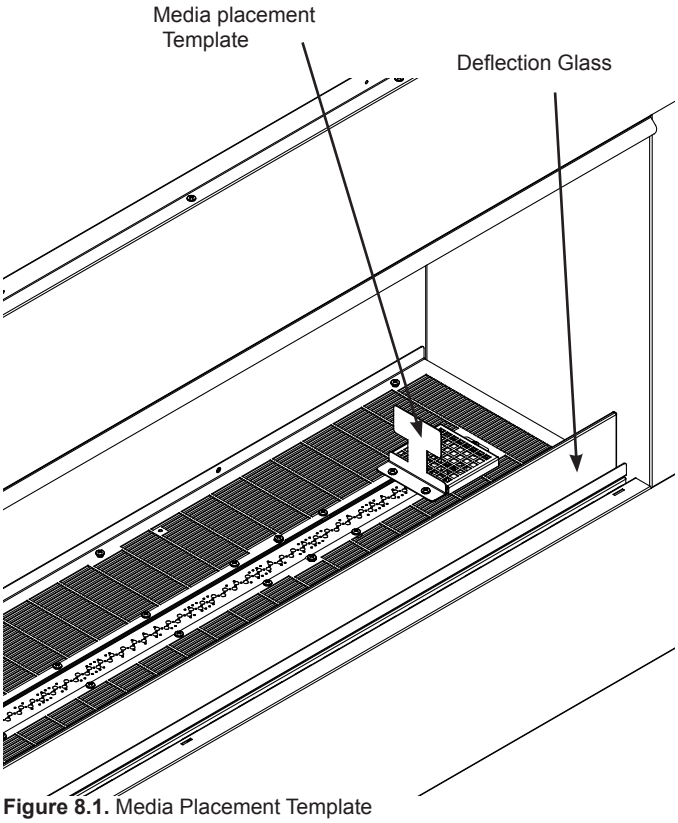

Figure 8.1. Media Placement Template

G. Remove Media Placement Template

Remove screws attaching the media placement template and remove. Do not discard template. This must be used at any time media is applied to unit.

9 Reference Materials

A. Accessories

LP Conversion Kit:

- LPK-ODLANAIG48
- LPK-ODLANAIG60

Media Kits: **NOTE: Same media kit for ODLANAIGST-48 and ODLANAIGST-60**

- Media-Ebony-48
- Media-Cobalt-48
- Media-Red-48
- Media-Amber-48

Optional Screen – ODLANAIG-48SCN, ODLANAIG-60SCN

- The Lanai series outdoor gas appliance offers a protection screen that is designed to protect the inside of the appliance from trash and other debris (sticks, leaves, etc.) while not in use. This appliance may be operated with the screen installed.

Optional Trim Kit – ODLANAIG-48CFT, ODLANAIG-60CFT

- The Lanai series outdoor gas appliance offers a trim kit that will allow the owner the option to cover the face of the appliance down to the firebox opening. This four (4) piece kit comes with an integrated eyebrow and 3/4” stainless steel lip that frames in the opening for a clean and seamless install.

Optional Drain Pan – ODLANAIG-48DP, ODLANAIG-60DP

- The Lanai series outdoor gas appliance offers a drain pan that is designed to channel moisture to the front or rear of the enclosure housing the appliance. This option will help ensure moisture does not become trapped inside the structure and helps to keep the area under the appliance free of standing water.

B. Addendum

How to Calculate the Minimum Opening Needed In an Outdoor Living Space

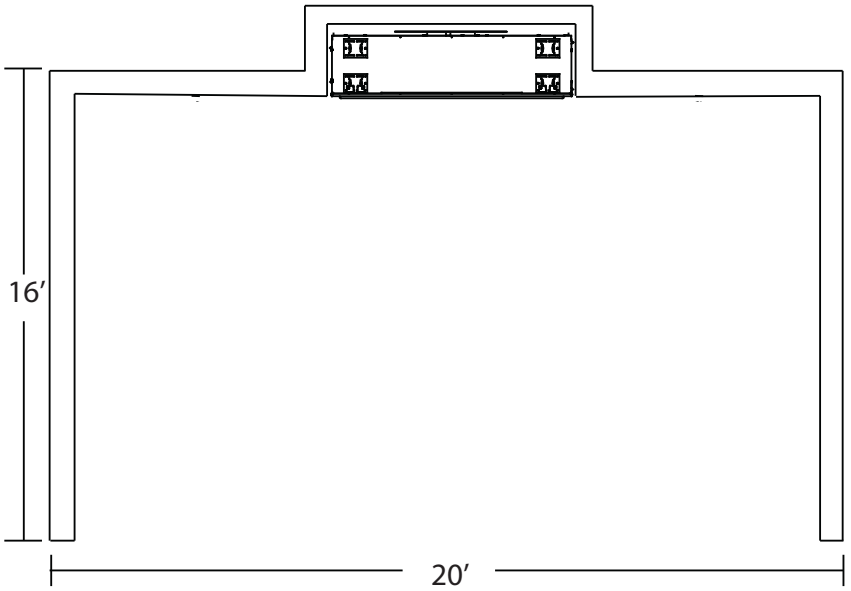

30% (or .30) of the outdoor living space periphery needs to be open.

1. Add lengths of the outside living space.
   16′+20′+16′+20′=72′

2. Divide the open area length by the total outdoor living space.
   20/72=**.28**

.28 is less than the .30 required and therefore this installation would not be approved.

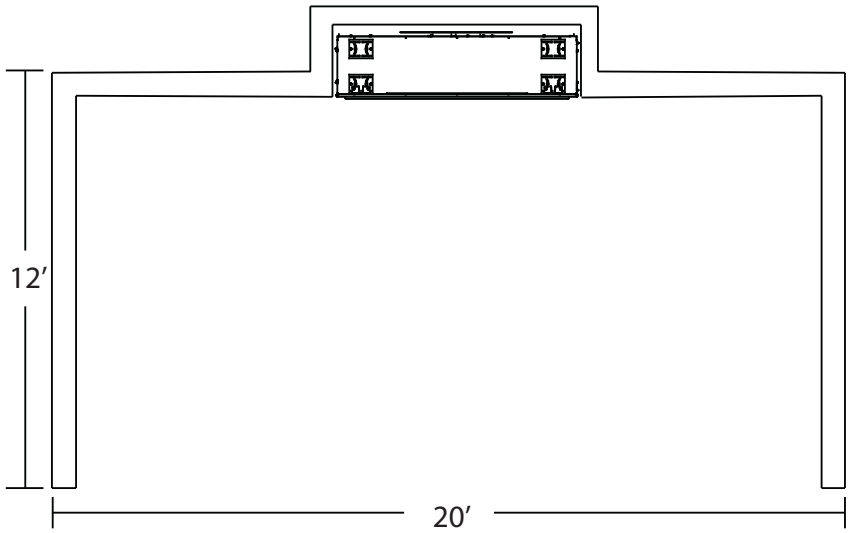

1. Add lengths of the outside living space.
   12′+20′+12′+20′=64′
2. Divide the open area length by the total outdoor living space.
   20/64=**.31**

.31 is greater than the .30 required and therefore this installation would be approved.

Outdoor Lifestyles, a brand of Hearth & Home Technologies
2571 215th Street West, Lakeville, MN 55044
www.hearthnhome.com

Please contact your Outdoor Lifestyles dealer with any questions or concerns.
For the location of your nearest Outdoor Lifestyles dealer,
please visit www.hearthnhome.com