Bäumr-AG®



620CXS 21” Self-Propelled Lawn Mower

User Manual

[Revision 1.0]

READ THIS MANUAL CAREFULLY BEFORE USE – FAILURE TO DO SO MAY RESULT IN INJURY, PROPERTY DAMAGE AND MAY VOID WARRANTY. • KEEP THIS MANUAL FOR FUTURE REFERENCE. • Products covered by this manual may vary in appearance, assembly, inclusions, specifications, description, and packaging.

THE BATTERY MAY HAVE SOME CHARGE ON ARRIVAL, IT IS IMPORTANT HOWEVER THAT THE BATTERY IS CHARGED PRIOR TO USE.

Safety

Safety messages are designed to alert you to possible dangers or hazards that could cause death, injury or equipment or property damage if not understood or followed. Safety messages have the following symbols:



You WILL be KILLED or SERIOUSLY INJURED if you do not follow instructions.



You CAN be KILLED or SERIOUSLY INJURED if you do not follow instructions.



You CAN be INJURED if you do not follow instructions or equipment damage may occur.

It is vital that you read and understand this user manual before using the product, including safety warnings, and any assembly and operating instructions. Keep the manual for future reference.

Safety precautions and recommendations detailed here must be fully understood and followed to reduce the risk of injury, fire, explosion, electrical hazard, and/or property damage.

Safety information presented here is generic in nature – some advice may not be applicable to every product. The term "equipment" refers to the product, be it electrical mains powered, battery powered or combustion engine powered.

- **Before Use** - If you are not familiar with the safe operation/handling of the equipment or are in any way unsure of any aspect of suitability or correct use for your application, you should complete training conducted by a person or organization qualified in safe use and operation of this equipment, including fuel/electrical handling and safety.
- Do NOT operate the equipment in flammable or explosive environments, such as in the presence of flammable liquids, gases, or dust. The equipment may create sparks or heat that may ignite flammable substances.
- Keep clear of moving parts.
- Equipment may be a potential source of electric shock or injury if misused.
- Do NOT operate the equipment if it is damaged, malfunctioning or is in an excessively worn state.
- Do NOT allow others to use the equipment unless they have read this manual and are adequately trained.
- Keep packaging away from children - risk of suffocation! Operators must use the equipment correctly. When using the equipment, consider conditions and pay due care to persons and property.

General Work Area Safety

- Work areas should be clean and well it.
- Do not operate the equipment if bystanders, animals etc are within operating range of the equipment or the general work area.
- If devices are provided for connecting dust extraction / collection facilities, ensure these are connected and used properly. Dust collection can reduce dust-related hazards.

General Personal Safety

- Wear appropriate protective equipment when operating, servicing, or when in the operating area of the equipment to help protect from eye and ear injury, poisoning, burns, cutting and crush injuries. Protective equipment such as safety goggles, respirators, non-slip safety footwear, hard hat, hearing protection etc should be used for appropriate equipment / conditions. Other people nearby should also wear appropriate personal protective equipment. Do not wear loose clothing or jewellery, which can be caught in moving parts. Keep hair and clothing away from the equipment.
- Stay alert and use common sense when operating the equipment. Do not over-reach. Always maintain secure footing and balance.
- Do not use the equipment if tired or under the influence of drugs, alcohol, or medication.
- This equipment is not intended for use by persons with reduced physical, sensory, or mental capabilities.

General Fuel Safety

- Petrol/fuel/gasoline is extremely flammable – keep clear of naked flames or other ignition sources.
- Do not spill fuel. If you spill fuel, wipe it off the equipment immediately – if fuel gets on your clothing, change clothing.
- Do NOT smoke near fuel or when refuelling.
- Always shut off the engine before refuelling.
- Do NOT refuel a hot engine.
- Open the fuel cap carefully to allow any pressure build-up in the tank to release slowly.
- Always refuel in well-ventilated areas.
- Always check for fuel leakage. If fuel leakage is found, do not start, or run the engine until all leaks are fixed.

General Carbon-Monoxide Safety

- Using a combustion engine indoors **CAN KILL IN MINUTES**. Engine exhaust contains carbon-monoxide – a poison you cannot smell or see.
- Use combustion engines OUTSIDE only, and far away from windows, doors, and vents.

General Equipment Use and Care

- Keep packaging away from children and pets, potential risk of suffocation or choking.
- The equipment is designed for domestic use only.
- Handle the equipment safely and carefully.
- Before use, inspect the equipment for misalignment or binding of moving parts, loose components, damage, or any other condition that may affect its operation. If damaged, have the equipment repaired by an authorised service centre or technician before use.
- Prevent unintentional starting of the equipment - ensure equipment and power switches are in the OFF position before connecting or moving equipment. Do not carry equipment with hands or fingers touching any controls. Remove any tools or other items that are not a part of the equipment from it before starting or switching on.
- Do not force the equipment. Use the correct equipment for your application. Equipment will perform better and be safer when used within its design and usage parameters.
- Use the equipment and accessories etc. in accordance with these instructions, considering working conditions and the work to be performed. Using the equipment for operations different from those intended could result in hazardous situations.
- Always keep equipment components (engines, hoses, handles, controls, frames, housings, guards etc) and accessories (cutting tools, nozzles, bits etc) properly maintained. Keep the equipment clean and, where applicable, properly lubricated.
- Store the equipment out of reach of children or untrained persons. To avoid burns or fire hazards, let the equipment cool completely before transporting or storing. Never place or store the equipment near flammable materials, combustible gases, or liquids etc.
- The equipment is not weather-proof, and should not be stored in direct sunlight, at high ambient temperatures or locations that are damp or humid.
- Do not clean equipment with solvents, flammable liquids, or harsh abrasives.
- For specific equipment safety use and care, see Equipment Safety.

© Baumr-AG

General Electrical Safety

- Inspect electrical equipment, extension cords, power bars, and electrical fittings for damage or wear before each use. Repair or replace damaged equipment immediately.
- Ensure all power sources conform to equipment voltage requirements and are disconnected before connecting or disconnecting equipment.
- When wiring electrically powered equipment, follow all electrical and safety codes.
- Always use a Residual Current Device (RCD) (GFCI) / Earth Leakage Circuit Breaker / Safety Switch when operating this item (electrical items only).
- High voltage / high current power lines may be present. Use extreme caution to avoid contact or interference with power lines. Electrical shock can be fatal.

General Electrical Safety

- Electrically grounded equipment must have an approved cord and plug and be connected to a grounded electrical outlet.
- Do NOT bypass the ON/OFF switch and operate equipment by connecting and disconnecting the electrical cord.
- Do NOT use equipment that has exposed wiring, damaged switches, covers or guards.
- Do NOT use electrical equipment in wet conditions or in damp locations.
- Do NOT use electrical cords to lift, move or carry equipment.
- Do NOT coil or knot electrical cords, and ensure electrical cords are not trip hazards.

General Service Information

- The equipment must be serviced or repaired at authorised service centres by qualified personnel only.
- Replacement parts must be original equipment manufacturer (OEM) to ensure equipment safety is maintained.
- Do NOT attempt any maintenance or repair work not described in this manual.
- After use, the equipment and components may still be hot – allow the equipment to cool and disconnect spark plugs and/or electrical power sources and/or batteries from it before adjusting, changing accessories, or performing repair or maintenance.
- Do NOT adjust while the equipment is running.
- Perform service-related activities in suitable conditions, such as a workshop.
- Replace worn, damaged or missing warning/safety labels immediately.

Child Choking Hazard!



- **WARNING: CHOKING HAZARD - CHILDREN UNDER 8 YRS. CAN CHOKE OR SUFFOCATE ON SMALL PARTS. ADULT SUPERVISION REQUIRED.**
- Carefully inspect anything a baby or child could gain access to, including this product & packaging.
- Dangers include anything of a size that could become stuck or lodged in a baby or child's airway.
- Dangers include things like raw, hard fruit and vegetable pieces, large pieces of meat, bones or sausage skins, popcorn, nuts, hard lollies and corn chips, small magnets and batteries, coins, beads, marbles and small uninflated balloons, broken toys and smaller toys, buttons, keys, and coins. But there are also many more.
- Pay particular attention to accessories, nuts, bolts, screws, washers, caps, covers, loose parts, parts that could be removed or break off, pieces of packaging, staples, tape etc.
- In the case of any doubt, secure the item of concern in an appropriate manner, or completely remove the possibility of access by a baby or child.

HAZARDOUS COMPONENTS!

- **BE AWARE THAT THE EQUIPMENT MAY INCLUDE HAZARDOUS COMPONENTS, SUCH AS BLADES, HOT SURFACES AND MOVING PARTS.**
- **MOVING BLADES CAN CAUSE SERIOUS INJURY AND EVEN DEATH IF USED IMPROPERLY OR WITHOUT SUFFICIENT PPE.**
- **DO NOT USE THIS EQUIPMENT ON UNEVEN SURFACES AND ALWAYS MAINTAIN GOOD BALANCE WHEN USING THIS EQUIPMENT. FAILURE TO DO SO MAY CAUSE SERIOUS INJURY.**
- **MAINTAIN A SECURE GRIP OF THE TRIGGER ASSEMBLY AT ALL TIMES.**

READ ALL INSTRUCTIONS

- **WARNING: SOME DUST CREATED BY SANDING, SAWING, GRINDING, DRILLING AND OTHER CONSTRUCTION ACTIVITIES MAY CONTAIN CHEMICALS THAT CAN CAUSE CANCER, BIRTH DEFECTS OR OTHER REPRODUCTIVE HARM. EXAMPLES INCLUDE:**
  - Lead from lead-based paints
  - Crystalline silica from bricks, cement and other masonry products
  - Arsenic and chromium from chemically treated timber
- Your risk from exposure depends on how often you do this type of work. To reduce exposure, work in a well-ventilated area and use approved safety equipment, such as a dust mask designed to filter microscopic particles.

IMPORTANT SAFETY INSTRUCTIONS

- **DANGER: THIS MACHINE MUST BE OPERATED ACCORDING TO THE SAFETY INSTRUCTIONS IN THIS MANUAL. AS WITH ANY POWER EQUIPMENT, CARELESSNESS OR OPERATOR ERROR CAN RESULT IN SERIOUS INJURY. THIS MACHINE CAN AMPUTATE HANDS AND FEET AND THROW OBJECTS. FAILURE TO FOLLOW ALL SAFETY INSTRUCTIONS MAY RESULT IN SERIOUS INJURY OR DEATH.**
- **WARNING: WHEN USING ELECTRIC LAWN MOWERS, ALWAYS FOLLOW BASIC SAFETY PRECAUTIONS TO REDUCE THE RISK OF FIRE, ELECTRIC SHOCK AND PERSONAL INJURY.**

SAFETY INSTRUCTIONS FOR LAWN MOWERS

- **WARNING: READ ALL SAFETY WARNINGS AND INSTRUCTIONS. FAILURE TO FOLLOW THEM MAY RESULT IN ELECTRIC SHOCK, FIRE AND/OR SERIOUS INJURY.**

Work area safety

- Keep the operating area clear of bystanders, especially children. Stop the lawn mower and any attachments if anyone enters the area. Contact with the moving blade or thrown objects may result in serious injury or death.

- Only operate the lawn mower in daylight or good artificial light. Poor visibility increases the risk of accidents.
- Do not operate the lawn mower in explosive atmospheres, such as near flammable liquids, gases or dust. Lawn mowers can create sparks that may ignite dust or fumes.
- Do not use the lawn mower in bad weather, especially when there is a risk of lightning. This reduces the risk of being struck by lightning.
- Thoroughly inspect the area where the lawn mower will be used. Remove stones, sticks, wires, bones and other foreign objects. Thrown objects can cause personal injury.

Electrical safety

- Do not expose the lawn mower to rain or wet conditions. Water entering the lawn mower may increase the risk of electric shock.

Personal safety

- Use personal protective equipment. Always wear eye protection. Protective equipment reduces the risk of personal injury.
- Dress properly. Do not wear loose clothing or jewellery. Keep hair and clothing away from moving parts. Loose clothing, jewellery or long hair can be caught in moving parts.
- Always wear long trousers while operating the lawn mower. Exposed skin increases the risk of injury from thrown objects.
- Always wear non-slip, protective footwear while operating the lawn mower. Do not operate the lawn mower barefoot or while wearing open sandals. This reduces the risk of foot injury from contact with the moving blade.
- Prevent unintentional starting. Ensure the switch is in the off position before connecting the mower to a power source and/or battery, picking it up or carrying it. Carrying a lawn mower with your finger on the switch or energising it while the switch is on can cause accidents.
- Remove any adjusting key or wrench before turning the lawn mower on. A wrench or key left attached to a rotating part of the lawn mower may result in personal injury.
- Keep proper footing and balance at all times. This provides better control of the lawn mower in unexpected situations.
- Stay alert, watch what you are doing and use common sense when operating the lawn mower. Do not use the lawn mower while tired or under the influence of drugs, alcohol or medication. A moment of inattention may result in serious personal injury.
- Do not let familiarity from frequent use make you complacent or cause you to ignore lawn mower safety principles. A careless action can cause serious injury in a fraction of a second.
- To avoid contact with the blade or injury from thrown objects, stay in the operator zone behind the handles. Blade contact or thrown objects may result in serious injury.
- Do not touch blades or other hazardous moving parts while they are still moving. This reduces the risk of injury from moving parts.

Lawn mower use and care

- Use the lawn mower and accessories according to these instructions, taking into account the working conditions and the work to be performed. Using the lawn mower for purposes other than those intended may result in a hazardous situation.
- Before use, visually inspect the lawn mower to ensure the blades and blade assembly are properly secured and not worn or damaged. Loose, worn or damaged parts may increase the risk of injury.
- Keep guards and other safety devices in place, properly mounted and in working order. A loose, damaged or incorrectly fitted guard or safety device may result in personal injury.
- Keep all cooling air inlets clear of debris. Blocked air inlets and debris may cause overheating or a fire.
- Do not use the lawn mower if the switch does not turn it on and off. Any lawn mower that cannot be controlled with the switch is dangerous and must be repaired.
- Do not operate the lawn mower on wet grass. Walk, never run. This reduces the risk of slipping, falling and personal injury.
- Do not operate the lawn mower on excessively steep slopes. This reduces the risk of loss of control, slipping, falling and personal injury.
- Do not force the lawn mower. Use the correct lawn mower for your application. The correct lawn mower will do the job better and more safely at the rate for which it was designed.
- Be aware of the mower and attachment discharge direction. Do not point the mower discharge at anyone. Thrown objects can cause personal injury.
- Use extreme caution when reversing or pulling the lawn mower towards you. Always be aware of your surroundings. This reduces the risk of tripping during operation.
- When working on slopes, always maintain secure footing. Work across the face of slopes, never up or down. Use extreme caution when changing direction. This reduces the risk of loss of control, slipping, falling and personal injury.
- Operate the disabling device and/or remove all battery packs, if removable, before making adjustments, changing accessories or storing the lawn mower. These preventive safety measures reduce the risk of accidental starting.
- Keep handles and gripping surfaces dry, clean and free from oil and grease. Slippery handles and gripping surfaces may prevent safe handling and control of the lawn mower in unexpected situations.
- Check the grass catcher frequently for wear or deterioration. A worn or damaged grass catcher may increase the risk of personal injury.
- Before removing the grass catcher, turn off the motor and wait until the blade has come to a complete stop. The blade continues to rotate after the blade control is released. Never place any part of your body in the blade area until you are certain the motor is off and the blade has stopped.
- Before unclogging the chute, turn off the motor, wait until the blade has come to a complete stop, operate the disabling device and/or remove all batteries, if removable. The blade continues to rotate after the blade control is released. Never place any part of your body in the blade area until you are certain the motor is off and the blade has stopped.
- Before cleaning or inspecting the lawn mower, turn off the motor, wait until the blade has come to a complete stop, operate the disabling device and/or remove all batteries, if removable. Accidental contact with the moving blade or moving parts may result in personal injury.
- Maintain the lawn mower and accessories. Check for misalignment or binding of moving parts, broken parts and any other condition that may affect operation. If damaged, have the lawn mower repaired before use. Many accidents are caused by poorly maintained lawn mowers.

- Store idle lawn mowers out of reach of children. Do not allow anyone unfamiliar with the lawn mower or these instructions to operate it. Lawn mowers are dangerous in the hands of untrained users.

Battery lawn mower use and care

- Use the lawn mower only with specifically designated battery packs. Using any other battery pack may create a risk of injury and fire.
- Recharge only with the charger specified by the manufacturer. A charger suitable for one type of battery pack may create a risk of fire when used with another battery pack.
- Follow all charging instructions. Do not charge the battery pack or lawn mower outside the temperature range specified in these instructions. Charging incorrectly or outside the specified temperature range may damage the battery and increase the risk of fire.
- Do not use a battery pack or lawn mower that is damaged or modified. Damaged or modified batteries may behave unpredictably and result in fire, explosion or injury.
- Do not expose the battery pack or lawn mower to fire or excessive temperatures. Exposure to fire or temperatures above 130 °C may cause an explosion.
- Under abusive conditions, liquid may be ejected from the battery. Avoid contact. If contact occurs, flush with water. If liquid contacts eyes, seek medical help immediately. Liquid ejected from the battery may cause irritation or burns.
- When battery packs are not in use, keep them away from other metal objects, such as paper clips, coins, keys, nails, screws or other small metal objects, that may connect one terminal to another. Shorting the battery terminals may cause burns or a fire.

Service

- Have the lawn mower serviced by a qualified repair person using only identical replacement parts. This ensures the safety of the lawn mower is maintained. Using parts that do not meet the original equipment specifications may lead to improper performance and compromise safety.
- Never service damaged battery packs. Battery packs should only be serviced by the manufacturer or an authorised service provider.

Safety Warnings For Battery Pack

- Do not modify or attempt to repair the battery pack. Do not dismantle, open or shred the battery pack.
- Do not expose the battery pack or lawn mower to fire or excessive heat. Exposure to fire or temperatures above 130 °C may cause an explosion.
- Do not short-circuit the battery pack. Do not store battery packs loosely in a box or drawer where they may short-circuit each other or be short-circuited by other metal objects. When the battery pack is not in use, keep it away from metal objects such as paper clips, coins, keys, nails, screws or other small metal objects that may connect one terminal to another. Shorting the battery terminals may cause burns or a fire.
- Do not subject the battery pack to mechanical shock.
- Observe the plus (+) and minus (–) markings on the battery pack and equipment, and ensure correct use.
- Keep the battery pack out of reach of children.
- Always use the battery pack recommended by the manufacturer.
- Keep the battery pack clean and dry.
- Wipe the battery pack terminals with a clean, dry cloth if they become dirty.
- Charge the battery pack before use. Always use the correct charger and refer to the manufacturer’s instructions for proper charging.
- Do not leave the battery pack on prolonged charge when not in use.
- After extended storage, it may be necessary to charge and discharge the battery pack several times to achieve maximum performance.
- The battery pack performs best when operated at normal room temperature: 20 °C ± 5 °C.
- Use the battery pack only for its intended application. Do not use a battery pack or lawn mower that is damaged or modified. Damaged or modified batteries may behave unpredictably, resulting in fire, explosion or injury.
- Remove the battery pack from the equipment when not in use.
- Dispose of the battery pack properly and in accordance with local regulations.
- Do not charge the battery pack outdoors, in rain or in wet locations.
- Recharge only with the charger specified by the manufacturer. A charger suitable for one type of battery pack may create a risk of fire when used with another battery pack.
- Use power tools only with specifically designated battery packs. Using any other battery pack may create a risk of injury and fire.
- Under abusive conditions, liquid may be ejected from the battery. Avoid contact. If contact occurs, flush with water. If liquid contacts eyes, seek medical help immediately. Liquid ejected from the battery may cause irritation or burns.
- **SAVE THESE INSTRUCTIONS. REFER TO THEM FREQUENTLY AND USE THEM TO INSTRUCT OTHERS WHO MAY USE THIS PRODUCT. IF YOU LEND THIS PRODUCT TO SOMEONE ELSE, ALSO PROVIDE THESE INSTRUCTIONS TO HELP PREVENT MISUSE AND POSSIBLE INJURY.**

Safety Symbols

The product may have safety warning labels attached to it, explained below. Understand the symbols on your product and their meanings. If any stickers become unreadable, unattached etc., replace them.



Flammable Material Hazard
Flammable liquids, gases, or substances etc may present. Avoid ignition sources and open flames. Danger of fire.



Read User Manual
Read and fully understand product safety warnings, operation, procedures etc before using the product.



Use Hand Protection
Wear appropriate hand protection and take due care as the product or use of the product may present hand hazards.



Carbon-Monoxide Hazard
Do not use the product in confined areas or without adequate ventilation. Carbon-monoxide poisoning can be fatal.



Electrocution / Electrical Shock Hazard
High voltage or high current electricity may be present or required by the product. Take due care when handling electrical products, cables, plugs and leads. Electrical shock can be fatal.



Toxic Fumes / Dust Hazard
Using the product or by-products from use may produce fumes, smoke or particles that could be harmful if inhaled. Wear appropriate breathing protection and have adequate ventilation.



Explosive Material Hazard
Combustible liquids, gases, or substances etc may be present. Avoid ignition sources and open flames. Danger of explosion.



Cutting / Amputation Hazard
The product may have blades, edges or mechanical devices that can cause severe cut injury to fingers, limbs etc. Take due care when handling and using the product.



Crush Hazard
The product may have blades, edges or mechanical devices that can cause severe crush injury to fingers, limbs etc. Take due care when handling and using the product.



Single Operator Only
The product must be operated by a single person only. More than one person operating the product may introduce additional hazards.



Use Face Protection
Wear appropriate full-face protection and take due care as the product or use of the product may present face and eye hazards.



Use Foot Protection
Wear appropriate foot protection and take due care as the product or use of the product may present foot hazards.



Use Eye / Ear / Head Protection
Wear appropriate eye and / or ear and / or head protection and take due care as the product or use of the product may present eye, hearing, and head hazards.



Running Hazard
Do not run on or near the product as doing so may present a fall hazard.



Diving Hazard
Do not dive into the product as doing so may present a neck / head injury hazard.



Adult Supervision Required
Always supervise children and other users of a product to prevent drowning or injury.



Skin Penetration / Puncture Hazard
The product may produce pressure, emit liquids or objects that can cause severe injury to fingers, limbs, blood etc. Take due care when handling and using the product.



Hot Surface Hazard
Be aware that the product may produce high temperatures and hot surfaces that can cause burn injuries.



Flying Debris Hazard
Be aware that the product or use of the product may present hazards produced by flying debris. Wear appropriate clothing and protective devices.



Moving Parts Hazard
Be aware that the product contains or uses mechanical devices that move or rotate. Always wait for moving parts to stop fully before handling the product, adjusting, maintenance etc.

© Baumr-AG

 **Carbon-Monoxide Hazard** Do not use the product in confined areas or without adequate ventilation. Carbon-monoxide poisoning can be fatal.	 **Pull Hazard** Be aware that the product contains or uses mechanical devices that can pull in objects and can cause severe injury to fingers, limbs etc. Take due care when handling and using the product.	 **Slope / Fall Injury Hazard** Be aware that using the product on sloping surfaces or in slippery conditions may present additional dangers from falls and contact with blades, moving parts, hot surfaces etc.	 **"Slam Dunk" Warning** Do NOT attempt "slam dunk" manoeuvres as this may result in severe injury due to falling, product breakage or collapse etc.
 **Electrocution / Electrical Shock Hazard - Outdoor** High voltage or high current electricity may be present or required by the product. Do NOT use in rain, damp, or wet conditions. Electrical shock can be fatal.	 **Electrocution / Electrical Shock Hazard - Disconnect** High voltage or high current electricity may be present or required by the product. Always disconnect the product from the electrical supply before handling the product, adjusting, maintenance etc.	 **Power Line Electrocution Hazard** High voltage / high current power lines may be present. Use extreme caution to avoid contact or interference with power lines. Electrical shock can be fatal.	 **"Kick-Back" Hazard** High level of "kick-back" hazard that can cause the machine to suddenly rotate towards operator. Kick-back injury can be fatal.
 **Winch Operator Position Hazard** Do NOT stand between winch and load. Do NOT use winch to move people.	 **Winch Lift Hazard** Do NOT LIFT load vertically. Use machine to PULL only.	 **Cable Hazard** Ensure that load bearing cable is not kinked or knotted.	 **Winch Cable Hazard** Ensure that there is a minimum number of cable coils on winching mechanism.
 **Winch Hook Hazard** Carry hook to load – do NOT throw or run.	 **Flash / Blinding Hazard** Wear appropriate eye protection for welding. Direct exposure to weld arcs may cause permanent eye injury.	 **Laser Hazard** Laser may be in use – do NOT look directly at laser or allow others to.	 **Choking Hazard** Children under 8 yrs. Can choke or suffocate on small parts. Adult supervision required.

Table of Contents

Safety **2**
Safety Symbols 6
Parts Identification **9**
Assembly **11**
Unpacking 11
Handle Assembly 11
Attaching / Removing the Mulching Plug 12
Attaching / Removing the Rear Discharge Chute 13
Setting Up the Grass Bag 14
Attaching / Removing the Grass Bag 15
Adjusting Cutting Height 16
Installing / Removing the Battery Packs 16
Battery Level Indicators 17
Operation **18**
Starting the Mower 18
Stopping the Mower 18
Self-Propelled Drive 19
Drive ON/OFF Operation 19
Speed Adjustment 20
Mowing Tips 20
Mowing on Slopes 20
Walking with Your Mower 21
Lithium Battery Care and Maintenance **22**
Top 3 Battery Care Requirements 22
Maintenance **24**
General Maintenance Tips 24
Cleaning the Mower 24
Blade Replacement 25
Sharpening the Blade 26
Sharpening Frequency 26
Lubrication 27
Storage **28**
Storage Options 28
Horizontal storage 28
Vertical Storage with Support Stand 29
Troubleshooting **30**
Operational Warnings **31**
Specifications **32**

Parts Identification

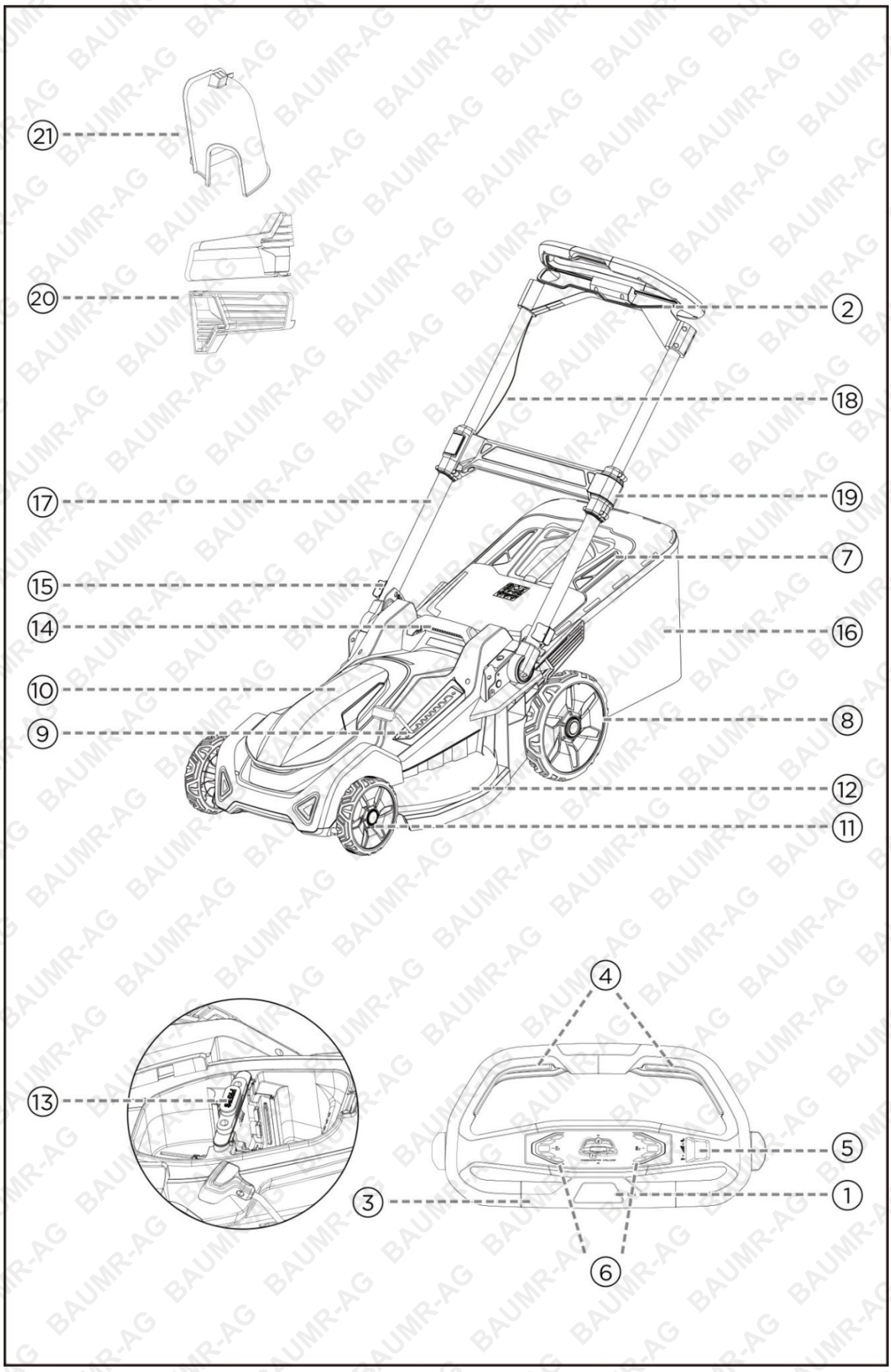

© Baumr-AG

No.	Name	No.	Name
1	Lock-Off Button	12	Mower Deck
2	On/Off Trigger	13	Battery Release Button
3	Push Handle	14	Carrying Handle
4	Self-Propelled Drive Levers	15	Quick Release Lever
5	Variable Speed Control Knob	16	Grass Bag
6	Battery Level Indicators	17	Telescopic Handle
7	Rear Discharge Cover	18	Electrical Cable
8	Rear Wheel	19	Telescopic Locking Lever
9	Height Adjustment Lever	20	Vertical Storage Support Stand
10	Battery Compartment Cover	21	Rear Discharge Chute
11	Front Wheel		

Assembly

WARNING: To prevent accidental starting, which may cause serious personal injury, always remove the battery pack from the lawn mower before assembling parts.

WARNING: Do not modify the lawn mower or use accessories not recommended by the manufacturer. Any alteration, modification or misuse may create a hazardous condition and result in serious injury.

WARNING: Do not attempt to start the lawn mower until it has been completely assembled.

Unpacking

- This product requires assembly.
- Remove all items from the carton. Make sure all items listed in the packing list are included.
- Inspect the lawn mower carefully to ensure no damage occurred during shipping.
- Do not discard the packaging materials until you have carefully inspected and successfully operated the lawn mower.
- If any parts are damaged or missing, contact the manufacturer.

Handle Assembly

WARNING: Do not start or operate the lawn mower until the handle is fully unfolded and securely locked in place.

Unfolding the Telescopic Handle

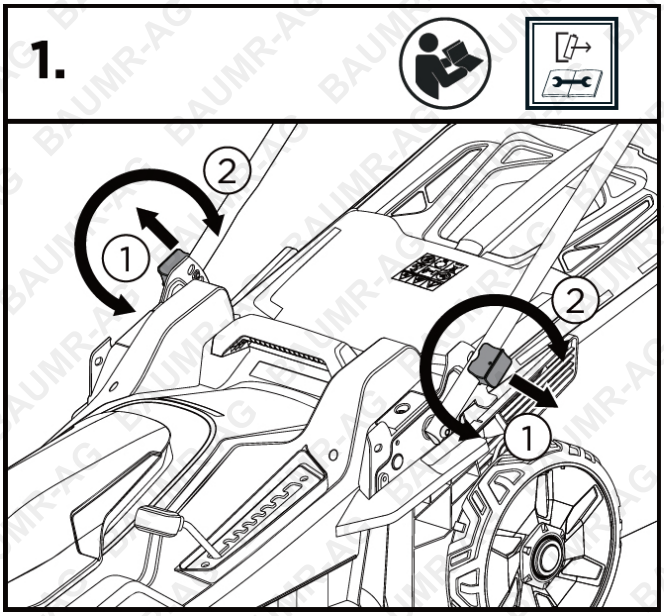

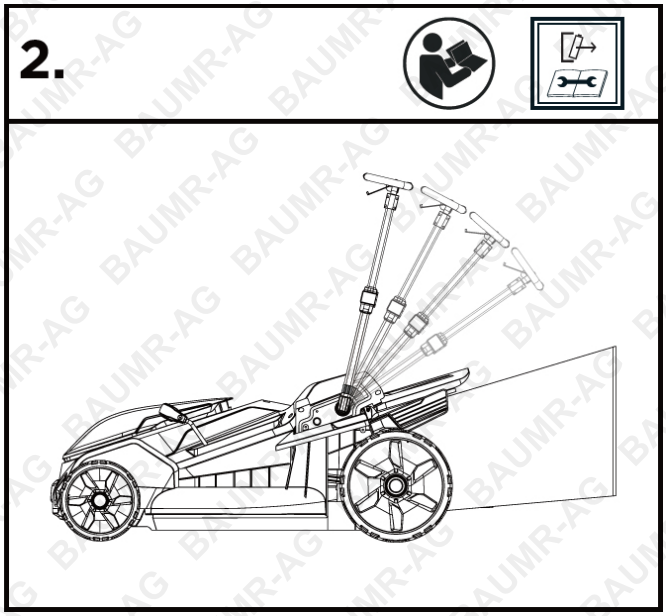

1. Rotate the telescopic handle towards the rear of the mower.
2. Pull out both quick-release levers and turn them to unlock.
3. Set the handle to the desired height. Four height positions are available.
4. Turn the quick-release levers back to their original position to lock the handle in place.

Adjusting the Telescopic Handle Length

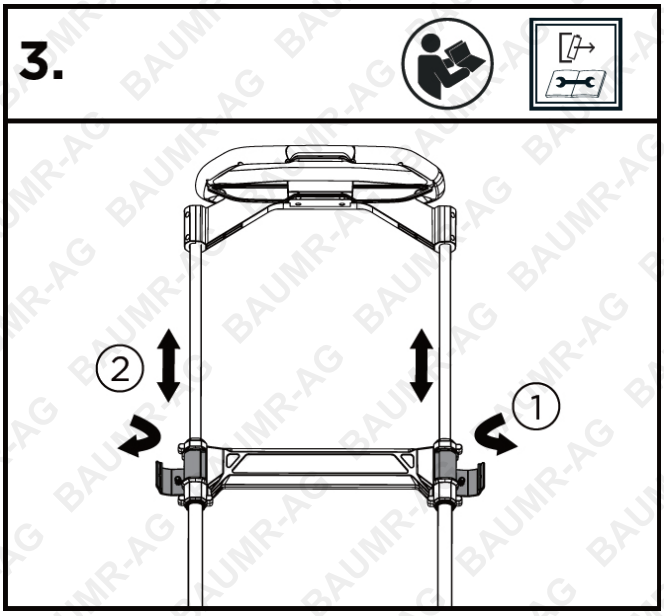

NOTICE: Ensure both telescopic locking levers are fully locked before operating the mower.

1. Pull both telescopic locking levers outwards to unlock.
2. Adjust the handle to the fully extended position for use or the fully retracted position for storage.
3. Push both levers back until they are securely locked.

Attaching / Removing the Mulching Plug

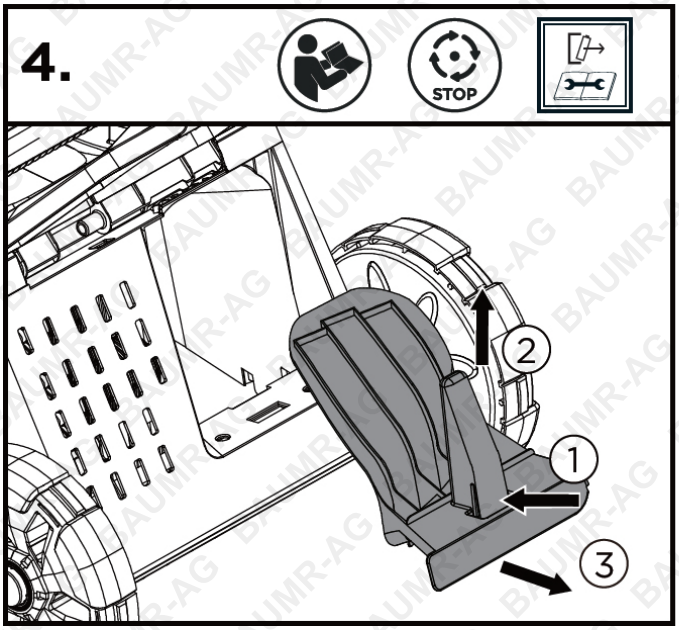

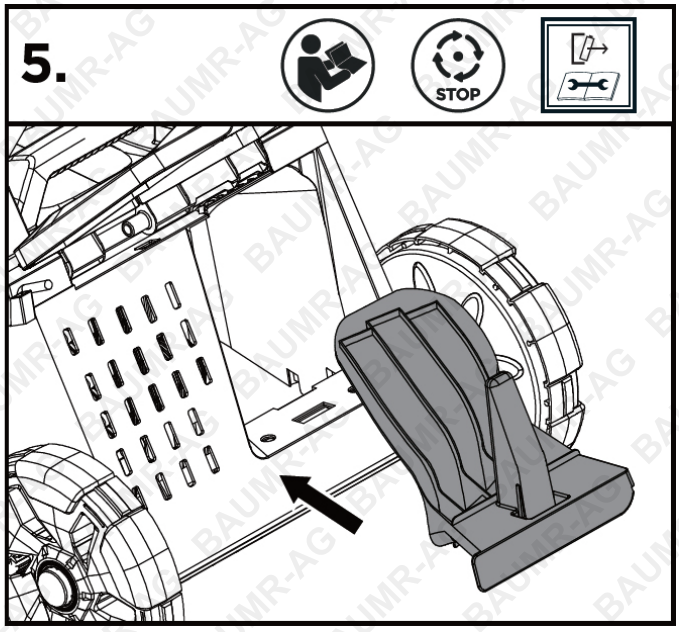

NOTICE: The mulching plug is pre-installed on the mower. To use the grass bag or rear discharge chute, remove the mulching plug first.

Removing the Mulching Plug

1. Lift the rear discharge cover.
2. Squeeze and hold the marked area firmly.
3. While holding the marked area, pull the plug upwards and outwards to remove it from the rear discharge opening.

Attaching the Mulching Plug

When mulching, align the plug and insert it fully into the rear discharge opening.

Attaching / Removing the Rear Discharge Chute

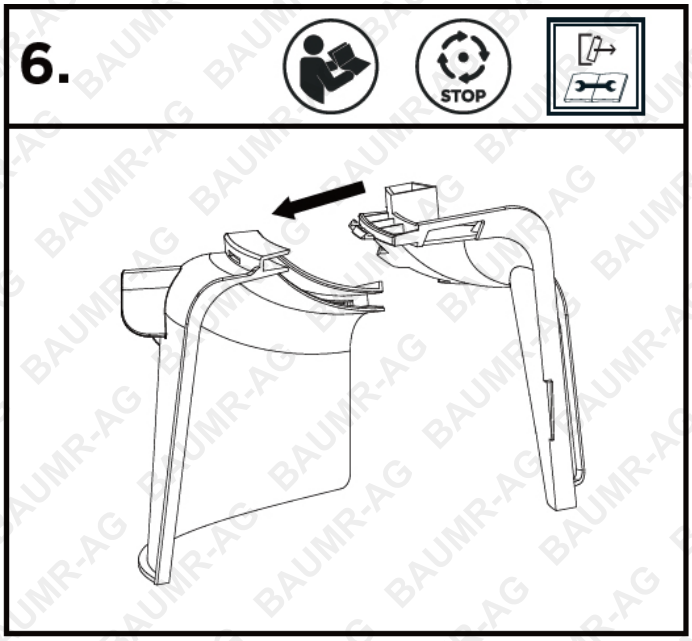

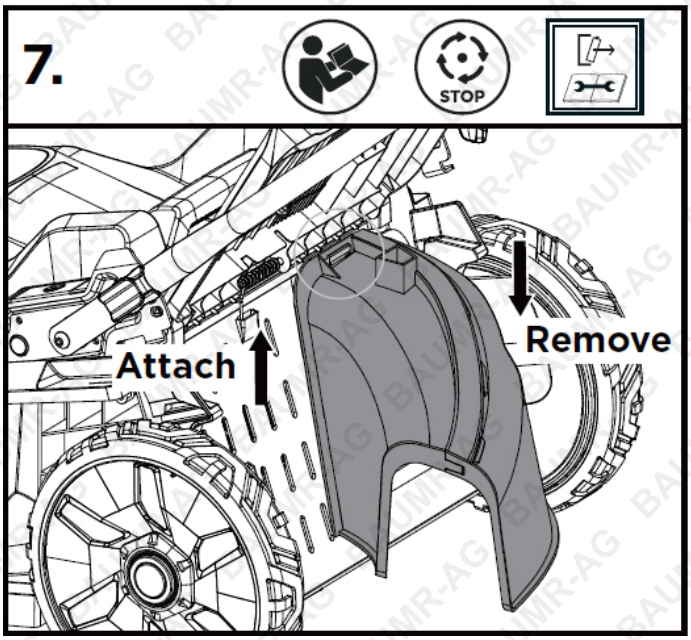

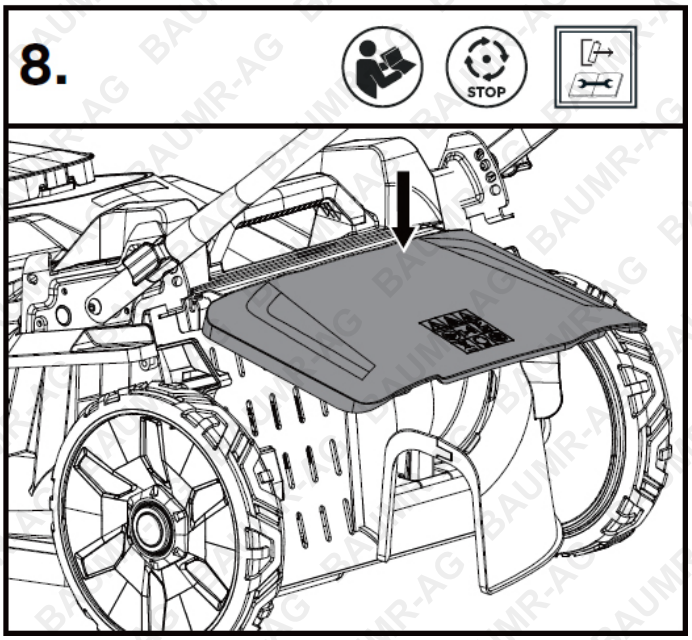

WARNING: Do not make any adjustments to the lawn mower without first stopping the motor, removing the battery pack and waiting until the blade has stopped rotating.

Assembling the Rear Discharge Chute

1. As shown in Fig. 6, align the two chute sections.
2. Press along the long slots until all sections click securely into place.

Attaching the Rear Discharge Chute

1. Remove the battery pack.
2. Lift the rear discharge cover.
3. Attach the rear discharge chute to the mower. See Fig. 7.
4. Release the rear discharge cover and ensure it rests firmly against the rear discharge chute. See Fig. 8.

Removing the Rear Discharge Chute

1. Lift the rear discharge cover.
2. Lift the rear discharge chute upwards to remove it from the mower.

Setting Up the Grass Bag

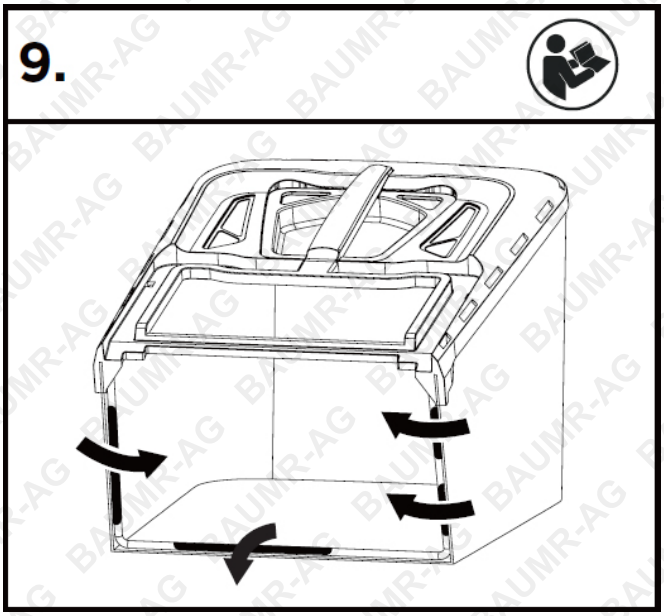

1. Unfold the grass bag as shown.
2. Attach the fastening strips along the edges to the rods.

Attaching / Removing the Grass Bag

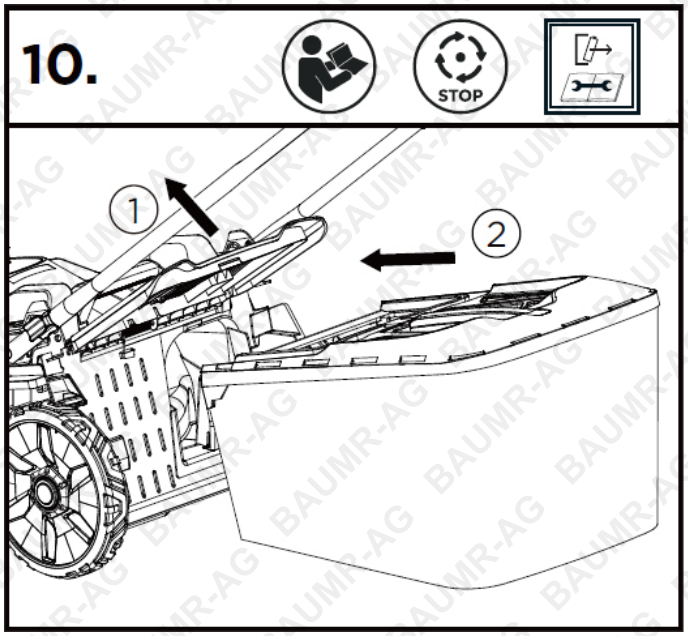

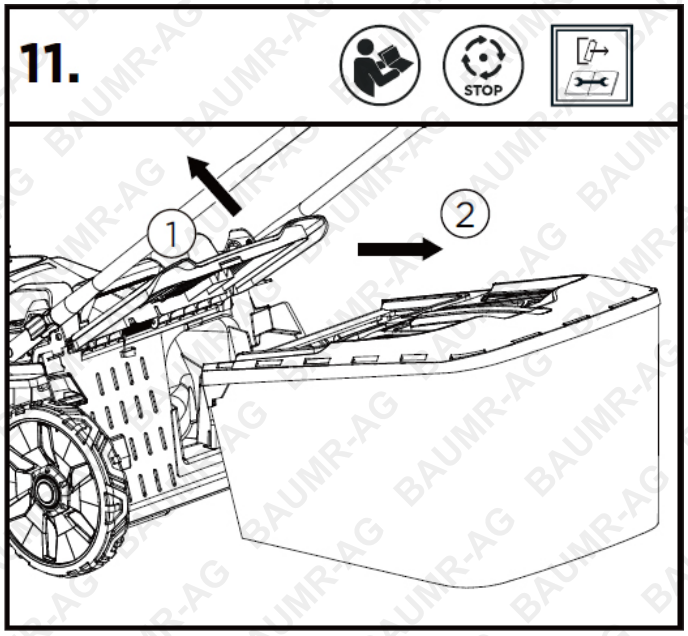

WARNING: Do not make any adjustments to the lawn mower without first stopping the motor, removing the battery pack and waiting until the blade has stopped rotating.

1. Lift and hold the rear discharge cover.
2. Hold the grass bag by the handle and hook it from above onto the hooks on both sides.
3. Release the rear discharge cover so it rests on the grass bag. See Fig. 10.
4. To remove the grass bag, lift the rear discharge cover, then lift the grass bag up and off the hooks on both sides.
5. Release the rear discharge cover. See Fig. 11.

WARNING: When using the grass bag, never start or operate the mower unless the grass bag is firmly hooked and secured to the mower, and the rear discharge cover rests snugly on top of the grass bag.

WARNING: With normal use, the grass bag material is subject to wear. To reduce the risk of injury, inspect the grass bag assembly regularly and replace it if there are any signs of wear or deterioration. Use only grass bags specified by the manufacturer for this mower.

© Baumr-AG

Adjusting Cutting Height

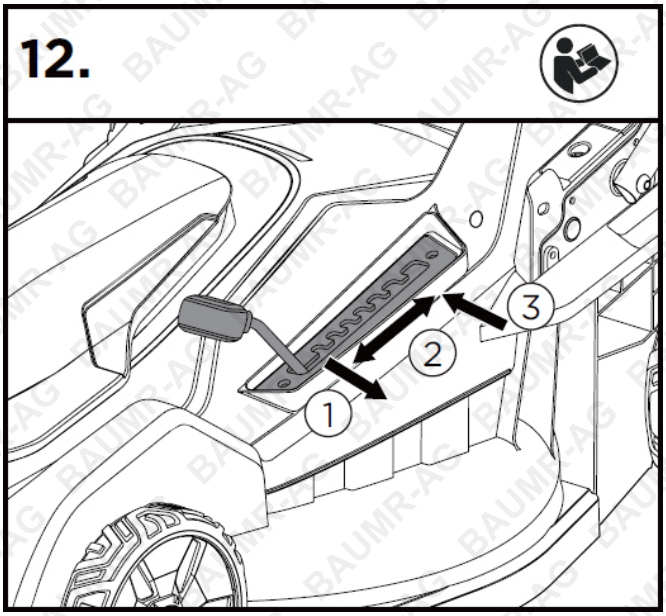

WARNING: Do not make any adjustments to the lawn mower without first stopping the motor, removing the battery pack and waiting until the blade has stopped rotating.

WARNING: Keep your feet away from the mower deck when adjusting the cutting height.

Pull the cutting-height adjustment lever out from the slot, then move it forwards or backwards to adjust the cutting height. The mower has 8 height positions and can be adjusted from approximately 30–100 mm. Do not place the lever outside the 8 slots.

Installing / Removing the Battery Packs

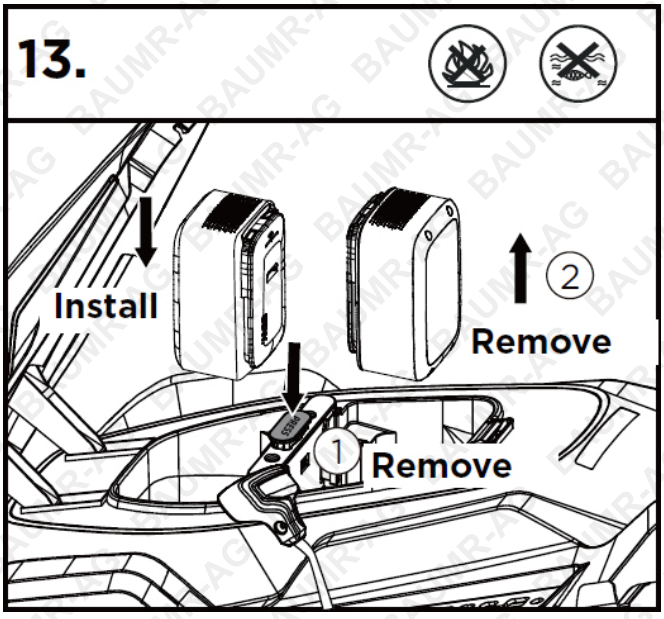

NOTICE: Do not use excessive force when inserting the battery packs. This lawn mower operates only when 2 battery packs are installed. Do not mix new and old battery packs. Use and charge both battery packs at the same time.

Installing the Battery Packs

Push the battery packs into the battery compartment in the correct direction and position. Push each battery pack in until it clicks securely into place.

Removing the Battery Packs

Press the battery release button, then pull the battery packs out of the mower.

Battery Level Indicators

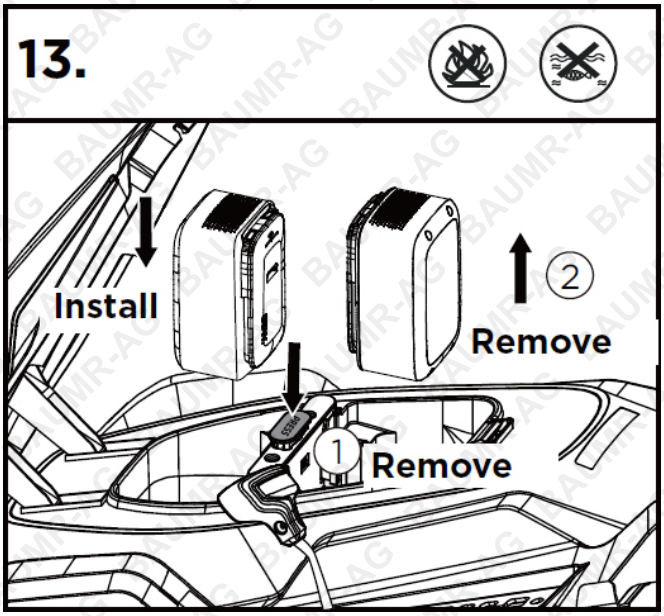

When the battery packs are installed, the battery level indicators illuminate to show the remaining charge in real time.

© Baumr-AG

Operation

Starting the Mower

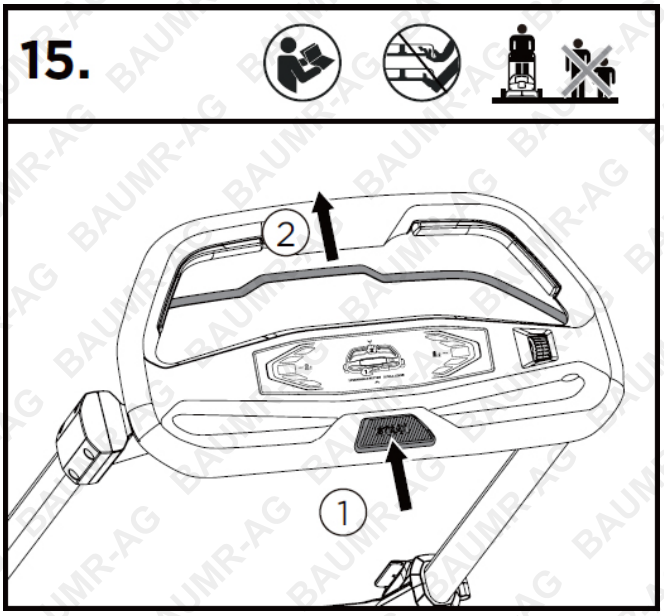

1. Insert the battery packs into the mower and close the battery cover.
2. Press the lock-off button.
3. While holding the lock-off button, pull the On/Off trigger upwards towards the handle. Release the lock-off button.
4. The mower will start.

Stopping the Mower

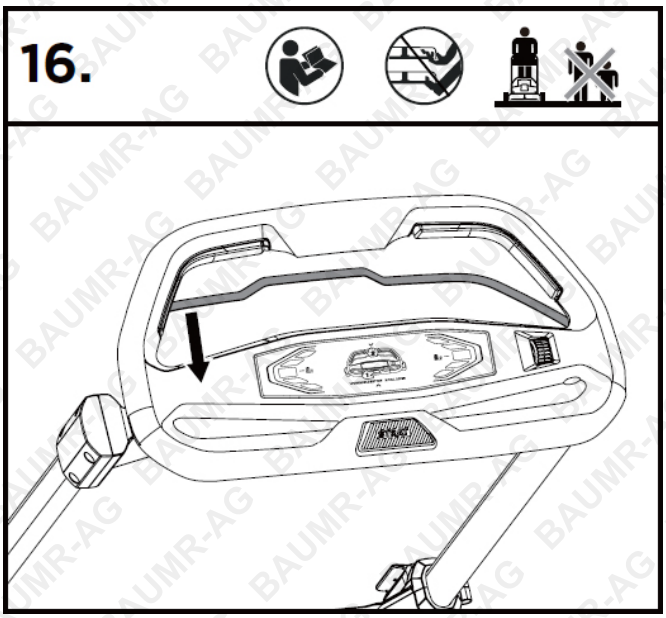

1. Fully release the On/Off trigger.
2. The automatic blade brake will stop the blade within 3 seconds after the On/Off trigger is released.

Self-Propelled Drive

WARNING: Do not use the self-propelled drive when pulling the mower backwards.

NOTICE: The self-propelled drive can operate independently or together with mowing.

Drive ON/OFF Operation

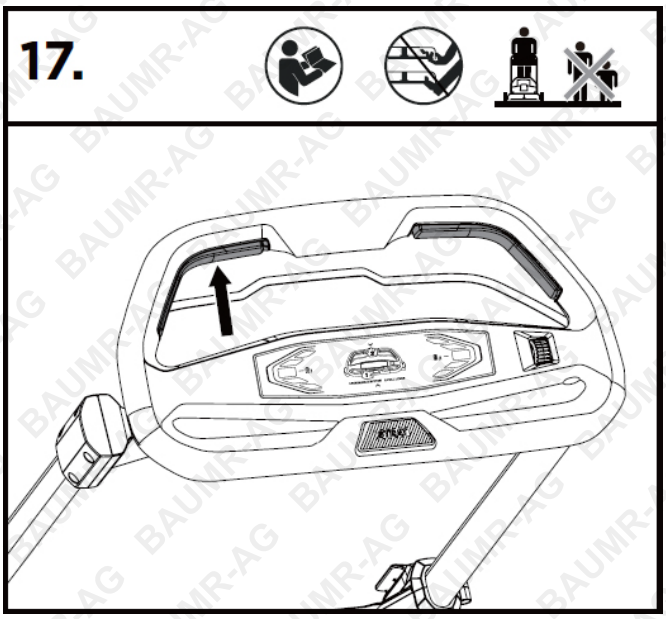

- To start the drive, pull either self-propelled drive lever towards the handle.
- To stop the drive, release the self-propelled drive lever.

© Baumr-AG

Speed Adjustment

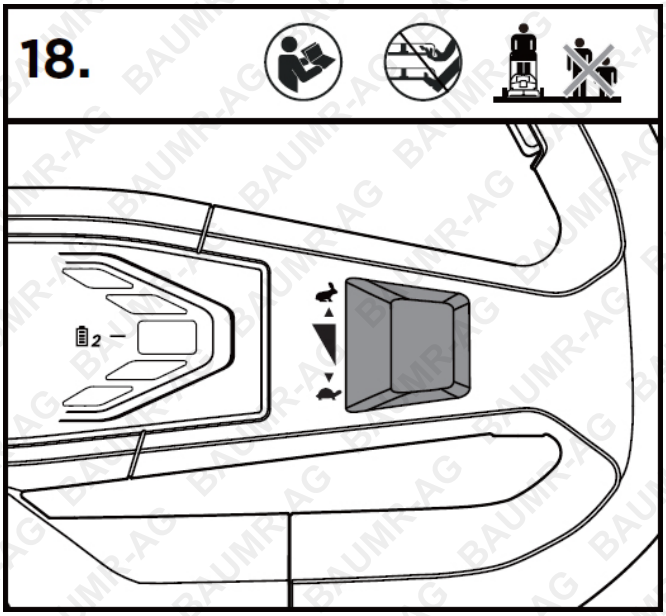

NOTICE: The speed is continuously adjustable.

Turn the speed control knob upwards or downwards to adjust the drive speed as needed.

Mowing Tips

NOTICE: A sharp blade greatly improves mower performance, especially when cutting tall grass. Check the blade for sharpness before mowing.

WARNING: If you strike a foreign object, stop the motor and remove the battery packs. Thoroughly inspect the mower for damage and repair any damage before restarting and operating the mower. Excessive vibration during operation may indicate damage. The mower should be inspected and repaired promptly.

- Check that the lawn is free of stones, sticks, wires and other objects that could damage the mower or motor. These objects may be thrown by the mower in any direction and cause serious personal injury to the operator or others.
- For best results, do not mow in circles. Mow back and forth across the lawn.
- When cutting thick grass, reduce your walking speed to improve cutting and discharge.
- To maintain a healthy lawn, cut off no more than one-third of the total grass height.
- During cooler months, the average lawn should be approximately 38–50 mm long. During warmer months, it should be approximately 50–83 mm long.

Mowing on Slopes

Slopes are a major cause of slip-and-fall accidents, which can result in serious injury. Mowing on slopes requires extra caution. Do not mow slopes greater than 15°.

Do

- Mow across the face of slopes, never up and down.

- Use extreme caution when changing direction on slopes.
- Watch for holes, ruts, rocks, hidden objects and bumps that may cause you to slip or trip.
- Tall grass can hide obstacles.

Do Not

- Do not mow near drop-offs, ditches or embankments. You may lose your footing or balance.
- Do not mow slopes greater than 15°, equivalent to a rise of approximately 0.75 m over 3 m.
- Do not mow wet grass. Unstable footing may cause slipping.

Walking with Your Mower

WARNING: Always observe the strictest safety procedures when using the lawnmower. Carefully read the safety instructions in this manual before using the lawnmower.

WARNING: Never open the ejector flap when the grass bag has been detached (to be emptied) and the engine is still running. The rotating blade can cause serious injuries!

1. Select your required setting.
2. Start the engine and allow it to run and set it to the required speed.
3. Keep a firm grip on the upper handle with engine stop/start lever and drive lever (clutch lever) dosed and walk along with its self-propelling to start mowing.

When Mowing:

- Walk. never run with the mower. Be very careful when mowing uneven or rough ground.
- Mow across slopes. never up and down.
- Be careful when changing the direction of the mower on a slope.
- Do not mow excessively steep slopes.

Note: Grass clippings can clog underneath the mower deck, preventing the blades from turning. This can overheat the engine, causing excessive wear to engine components, reducing the lawn mower's overall lifespan or catastrophic failure of engine bearings and pistons.

Clogging occurs if you mow wet, long, or lush grass. For the best result, mow when the grass is dry and use a whipper snipper to reduce the height of grass longer than 15cm (6”) before mowing on the highest cutting setting.

- Grass grows at different rates at different times of the year. Never use the lowest cutting height for the first cut of the season or in drought conditions.
- Only about one third of the grass height should be cut.
- When mowing with the mulching function, do not cut high or wet grass to ensure that the cut grass can be scattered efficiently. When you have been cutting for several minutes, please stop the mower, and clean the blade and the deck.
- Do not remove grass debris in the mower casing or on the blade by hand or with your feet. Instead, use suitable tools such as a brush or broom.

Lithium Battery Care and Maintenance

Top 3 Battery Care Requirements

1. **Charge battery before first use**. The battery may arrive with some charge, regardless of this the battery must be charged for 2 hours on the initial charge and 2 hours for each subsequent charge.
2. **Charge battery immediately when it is depleted.** Do not store a depleted battery. This will permanently impact the life of the battery. If the battery is going to be stored for a period of time, fully charge the battery before storing.
3. **Disconnect battery when not in use**. To prolong the life of a battery, disconnect it from the unit when not in use. Disconnect chargers from the battery once charged.

To ensure the battery maintains optimum performance, follow the guidelines outlined below.

- For best results, charge batteries in temperatures between 10°C and 30°C
- When battery is charged, disconnect the charger from the power supply and remove the battery from the charger.
- If a battery is stored or otherwise unused for an extended period, and the battery has no charge remaining when you check it, consider it to be damaged. Do not attempt to recharge it or to use it. Replace it with a new battery.
- Use only with the battery charger specified by the manufacturer.
- Ensure that the battery charger electrical cord is not subjected to damage or stress. Do not operate the battery charger if it has a damaged electrical cord or plug.
- Do not use the charger in wet areas or expose it to rain or water.
- The typical estimated life of a Lithium-Ion battery is about two to three years or 300 to 500 charge cycles, whichever occurs first. One charge cycle is a period of use from fully charged, to fully discharged, and fully recharged again.
- Explosion hazard – protect the battery against heat, for example, direct sunlight and fire. Do not store batteries in vehicles or locations subject to heat.
- Batteries can explode in the presence of an ignition source, such as a pilot light. To reduce the risk of serious personal injury, never use any cordless product in the presence of open flame. Exploding batteries can propel debris and chemicals.
- Do not open the battery – danger of short-circuiting and/or explosion.
- Do not attempt to destroy or disassemble the battery pack or remove any of its components.
- Do not touch the battery terminals with metal objects and/or body parts as short-circuit and/or personal injury may result.
- Explosion hazard – do not open and/or short-circuit the battery.
- Poison hazard – battery leakage (liquid ejection). Under extreme conditions, liquid may be ejected from the battery – avoid contact. If contact accidentally occurs, immediately seek medical attention, and flush with water. If liquid contacts eyes, immediately seek medical attention, flush with clean water for at least 10 minutes. Liquid ejected from the battery may cause irritation or burns.
- Dispose of non-serviceable batteries in an environmentally responsible manner and according to local regulations.

Failure to adhere to the requirements above may result in the battery becoming inoperative or battery life being reduced. In extreme cases or abuse, battery overheating, or fire may result.

DANGER - BATTERY CHARGING, USE AND STORAGE

Like mobile phones, laptops, cordless vacuum cleaners etc, this product may contain or be related to a lithium ion battery pack (lithium ion batteries and lithium ion battery related items only). Lithium ion batteries allow fast charging and high capacities, however care must be taken to reduce chances of a fault, and increase safety in case a fault occurs. Catastrophic incidents involving lithium ion batteries have a tendency to result in large amounts of smoke and fire. Be sure to follow the points below to reduce the likelihood of danger whenever you use, charge or store any lithium ion battery.

- Never charge a battery that has been damaged or subjected to a forceful impact.
- Never charge a battery that has been exposed to moisture or water.
- Never charge a battery with a charger that wasn't supplied with the battery.
- Never use a battery in a device that it wasn’t specifically designed for.
- Never use a battery with a modified or damaged device.
- Never modify the battery, product, charger, circuitry or wiring.
- Never charge a battery in an exit path that may be used by people to leave a room or building in case of an emergency, for example, the hallway or foyer of a residence.
- Never charge a battery in an area or building that doesn't have the recommended number of working smoke detectors that have been tested in accordance with local guidelines.
- Never charge a battery when the battery or charger is displaying a problem or charging incorrectly.
- Always charge batteries on a non-combustible surface, for example, on a concrete floor.
- Always charge batteries at least 3m away from anything combustible, such as floors, wall surfaces, furniture, storage shelves etc.
- Always charge batteries in an open area (outside if possible) ensuring the battery and charger are away from moisture and water.
- Always disconnect batteries from the charger after charging.
- Always remove or disconnect batteries from the device/product when not in use.
- Always ensure batteries are charged under adult supervision. Do not charge unattended. Do not charge batteries while no one is home or while people are sleeping.
- Keep batteries away from heat and moisture.
- Damaged batteries should be disposed of through your local e-waste collection service.
- Avoid mixing and matching chargers. Unplug products when fully charged, and charge batteries in a cool, dry place away from combustible materials like beds, lounges, or carpet.
- During charging and use, check your lithium-ion batteries for overheating, signs of swelling, leaking, or venting gas. Immediately stop using your product if these signs are present.
- Allow batteries to cool after use and before charging.

Maintenance

ATTENTION: Surface corrosion will occur on metal surfaces over time and the rate of oxidation depends on factors such as proximity to the ocean and humidity or condensation of water vapour on metal surfaces. To mitigate this, WD40 can be used to remove surface corrosion then, when applied periodically, it will prevent rust from forming.

WARNING: When servicing, use only identical replacement parts. Using other parts may create a hazard or cause product damage. To ensure safety and reliability, all repairs must be performed by a qualified service technician.

WARNING: To prevent serious personal injury, remove the battery packs from the mower before servicing, cleaning, changing accessories or removing material from the mower.

WARNING: For user safety, worn or damaged parts must be replaced. Use only replacement parts specified by the manufacturer.

WARNING: To prevent serious injury caused by mower failure, do not use damaged equipment. If abnormal noise or vibration occurs, stop using the mower and have the problem corrected before further use.

General Maintenance Tips

- Do not attempt to repair the mower yourself.
- Check all parts regularly for proper tightness to ensure the mower is in safe working condition.
- Before each use, inspect the general condition of the mower. Check for:
  - loose hardware
  - misaligned or binding moving parts
  - cracked or broken parts
  - any other condition that may affect safe operation

Cleaning the Mower

WARNING: Always remove the battery packs before servicing, cleaning or transporting the mower.

- Clean the underside of the mower deck after each use. Grass clippings, leaves, dirt and other debris can accumulate.
- Wipe the mower clean with a damp cloth.

© Baumr-AG

Blade Replacement

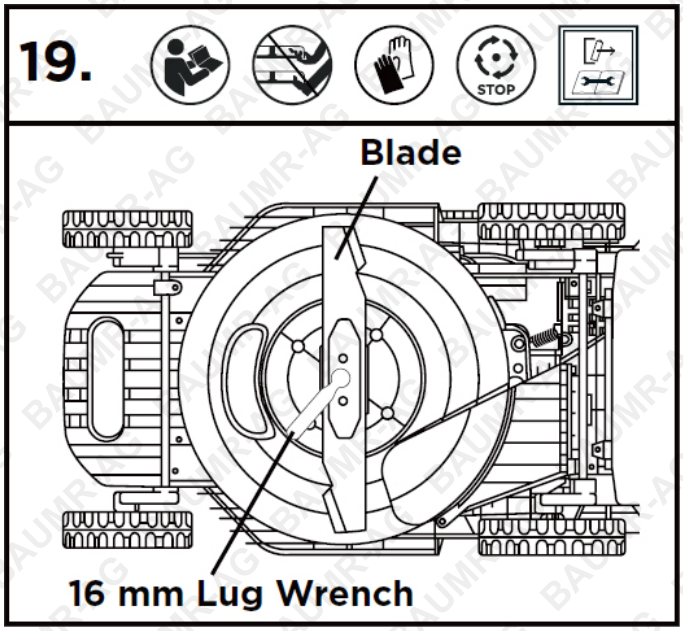

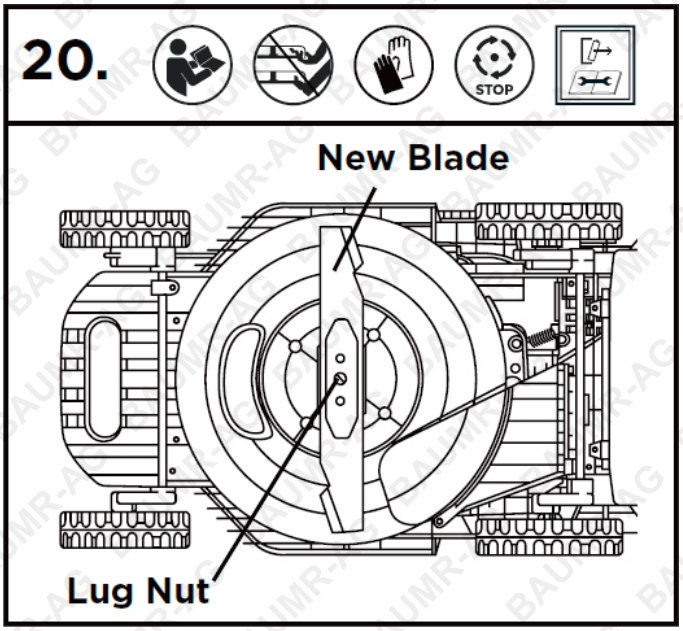

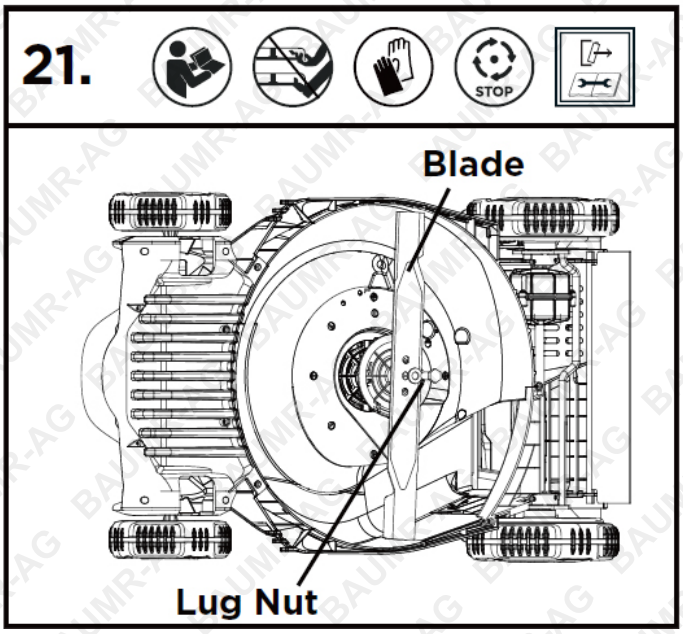

WARNING: Always protect your hands by wearing heavy-duty gloves or wrapping the cutting edges with rags or other materials when performing maintenance on the mower blade. Always remove the battery packs before servicing or transporting the mower.

1. Remove the battery packs from the mower.
2. Turn the mower on its side to expose the underside of the blade housing.
3. Grip the blade with a cloth or wear heavy-duty gloves.
4. Using a 16 mm spanner or socket, remove the lug nut securing the blade by turning it anticlockwise. Required torque: 25–30 N·m. Carefully remove the blade. See Fig. 19 and Fig. 20.
5. Fit the new blade in the same position and secure it with the original lug nut. Required torque: 25–30 N·m. See Fig. 21.

© Baumr-AG

Sharpening the Blade

WARNING: Always protect your hands by wearing heavy-duty gloves or wrapping the cutting edges with rags or other materials when performing maintenance on the mower blade. Always remove the battery packs before servicing or transporting the mower.

WARNING: Wear proper eye protection when removing, sharpening and installing the blade.

WARNING: A worn, cracked or damaged blade can break, and pieces may become dangerous projectiles. Thrown objects can cause serious injury. Inspect the blade regularly and do not operate the mower with a worn or damaged blade.

NOTICE: Keep the blade sharp for best mowing performance. A dull blade does not cut grass cleanly or mulch properly. A dull blade can be sharpened, but a blade that is excessively worn, bent, cracked or otherwise damaged must be replaced. A damaged blade can break and throw pieces from the mower.

Sharpening Frequency

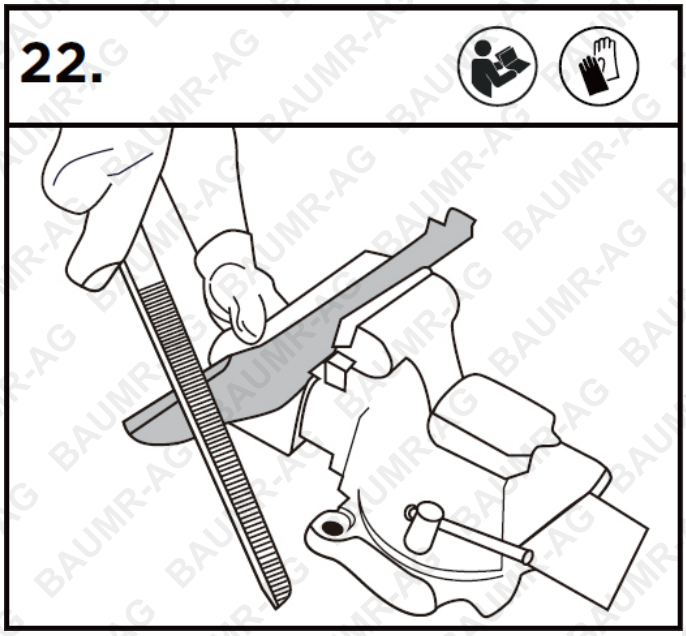

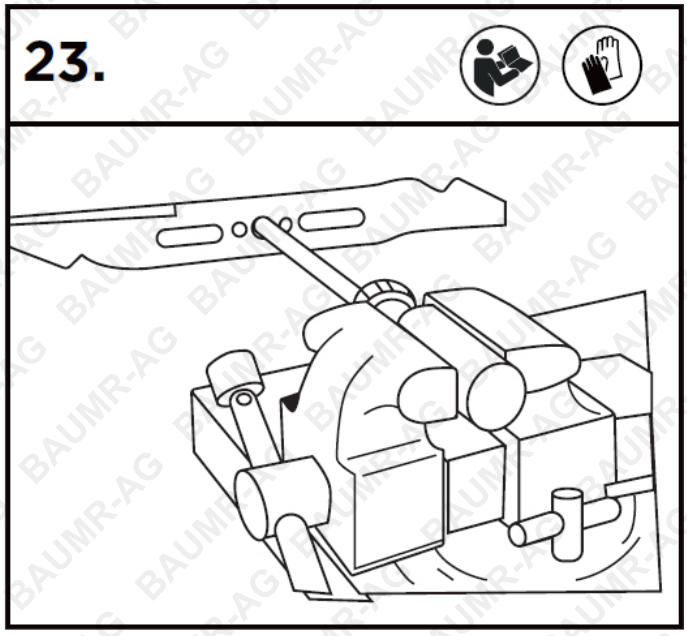

Sharpening the blade twice during the mowing season is usually sufficient under normal conditions. Sandy soil can dull the blade more quickly. If your lawn has sandy soil, sharpen the blade more often.

When Sharpening the Blade

- Ensure the blade remains balanced.
- Sharpen the blade at the original cutting angle.
- Sharpen the cutting edges on both ends of the blade, removing an equal amount of material from each end.

Sharpening the Blade in a Vice

1. Remove the blade from the mower. See Blade Replacement.
2. Secure the blade in a vice. See Fig. 22.
3. Wear eye protection and gloves. Be careful not to cut yourself.
4. Carefully file the cutting edges of the blade with a fine-tooth file or sharpening stone, maintaining the original cutting angle.

© Baumr-AG

5. To check the blade balance, clamp a nail or round-shank screwdriver horizontally in a vice. Position the blade so the nail or screwdriver supports the blade through its centre hole. Balance the blade horizontally. If either end rotates downwards, remove material from the heavier end until the blade is balanced. The blade is balanced when neither end drops. See Fig. 23.
6. Refit the blade to the mower and tighten it securely. See Blade Replacement.

WARNING: An unbalanced blade will cause excessive vibration when rotating at high speed. This may damage the mower and could cause the blade to break, resulting in personal injury.

Lubrication

WARNING: Remove the battery pack before performing any lubrication work.

The mower should be lubricated by a qualified service technician or authorised service centre.

© Baumr-AG

Storage

Take the following steps to prepare the lawn mower for storage:

1. Remove the battery packs from the battery compartment.
2. Remove the grass bag. Set the height adjustment lever to the lowest cutting-height position.
3. Clean the mower with a damp cloth or hand brush.
4. Store the mower indoors in a clean, dry, cool area, out of reach of children. Do not store the mower near corrosive materials such as fertiliser or rock salt.
5. Do not cover the mower with a solid plastic sheet. Plastic covers can trap moisture around the mower, which may damage the unit.
6. Fully retract the telescopic handle.
7. Fold the handle down into the 0° storage position.

NOTICE: When folding the handle and adjusting it to the storage position, take care not to damage the battery compartment cover. Damage caused by improper handling is not covered under warranty.

Storage Options

Horizontal storage

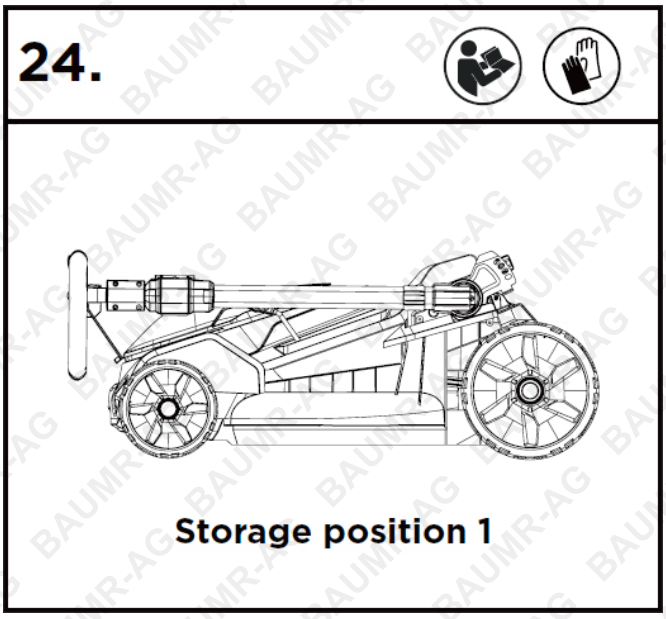

Vertical Storage with Support Stand

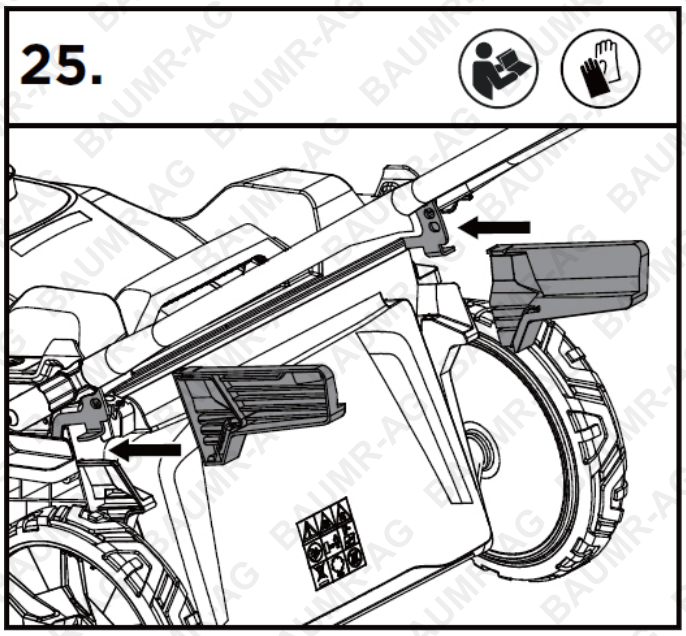

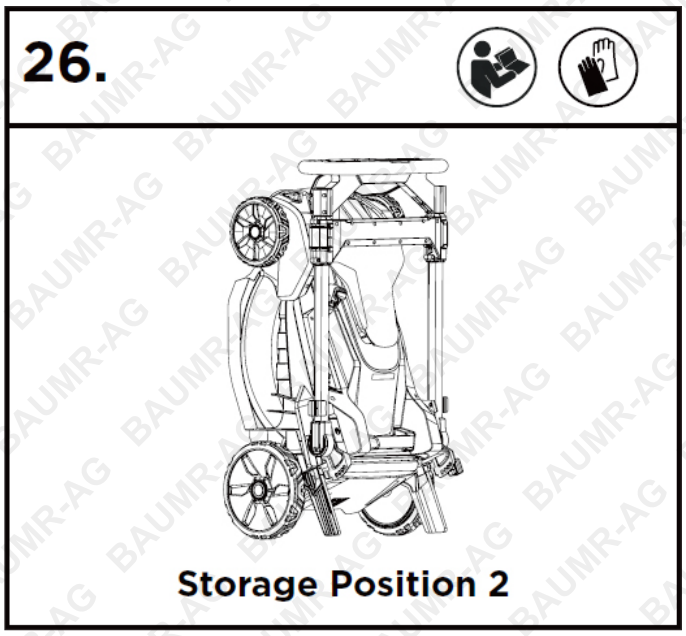

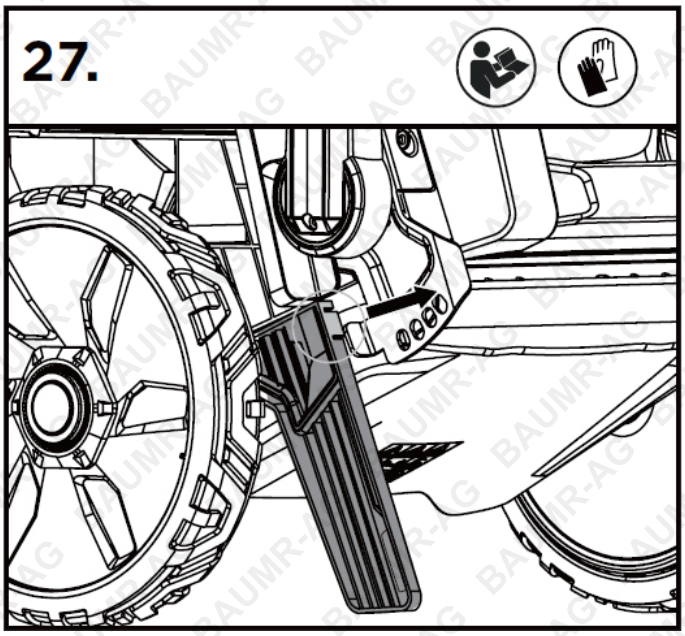

Installing the Support Stand

1. Align the support stands with the designated attachment points at the rear of the mower, as shown. Press firmly until they are securely attached. See Fig. 25.
2. After installation, the mower can be stored vertically as shown, saving space. See Fig. 26.

NOTICE: The support stands do not need to be removed after installation and do not affect mower operation.

Removing the Support Stand

Grip the support stands as shown and pull them outwards from the indicated positions to detach them. See Fig. 27.

Troubleshooting

WARNING: Switch off the mower and remove the battery packs before troubleshooting.

The following table provides checks and actions you can perform if the mower does not operate correctly. If these steps do not resolve the problem, contact the manufacturer.

Problem	Possible Cause	Solution
The mower fails to start.	The battery packs are depleted.	Charge the battery packs.
	The battery packs are not correctly installed in the battery compartment.	Ensure the battery packs are fully inserted and securely engaged.
	The battery packs or mower circuitry are too hot.	Allow the battery packs or mower to cool until the temperature drops below 67 °C.
	The mower deck is clogged with grass or debris.	Clean the mower deck and ensure the blade can move freely.
	Other causes.	Contact the manufacturer.
The mower cuts unevenly.	The blade is dull.	Sharpen or replace the blade.
	The cutting height is not set correctly.	Adjust the cutting height to a higher setting.
	The blade is installed incorrectly.	Reinstall the blade. See Blade Replacement.
The mower stops while mowing.	The mower is overloaded.	Raise the cutting height or slow your walking speed.
	The mower deck is clogged with grass or debris.	Clear the mower deck. Ensure there are no objects obstructing the grass to be mowed.
	The battery packs or mower circuitry are too hot.	Allow the battery packs or mower to cool until the temperature drops below 67 °C.
There is excessive vibration.	The cutting blade is loose.	Tighten the blade bolt.
	The cutting blade is unbalanced.	Balance the blade according to the instructions in this manual.
	The cutting blade is bent.	Replace the blade.
The motor runs, but the blade does not cut the grass.	The blade is not tightened to the required torque.	Retighten the blade. Recommended blade bolt torque: 25–30 N·m.
The mower has a short run time with the supplied battery packs.	Grass conditions and cutting height can greatly affect battery run time. The stated run time is based on light-load conditions.	Raise the cutting height and slow your walking speed to reduce the cutting load.

© Baumr-AG

Operational Warnings

WARNING: Do not allow familiarity with this product to make you careless. A careless action can cause serious injury in a fraction of a second.

WARNING: Do not use attachments or accessories not recommended by the manufacturer. Using attachments or accessories that are not recommended may result in serious personal injury.

WARNING: Always wear eye protection with side shields and hearing protection. Failure to do so may result in objects being thrown into your eyes, which can cause serious injury.

Charging Your Battery

WARNING: Charge the battery in a dry, well-ventilated room, away from combustible materials and ignition sources.

NOTICE: Lithium-ion batteries are shipped partially charged. Fully charge the battery before first use.

NOTICE: Refer to the battery pack instructions for details about indicator lights and charging precautions.

Starting / Stopping the Lawn Mower

WARNING: Lawn mower operation can cause foreign objects to be thrown into your eyes or the eyes of others, which may result in serious eye damage. Always wear safety glasses while operating the mower or performing adjustments or repairs.

WARNING: Keep bystanders and pets at least 30 m away from the mower while it is in use.

WARNING: The blade continues to rotate for a few seconds after the mower is turned off. Allow the motor and blade to stop rotating before starting the mower again. Do not rapidly turn the mower off and on.

CAUTION: Do not attempt to override the lock-off button or On/Off trigger.

© Baumr-AG

Specifications

Power Type	Battery
Power (Watts)	1600 W
Motor Type	Brushless
Battery Type	Lithium-ion SYNC
Battery Capacity	4.0 Ah
Battery Voltage	40 V
Charge Time	2 Hours
Cutting Width	510 mm
Deck Material	Polypropylene
Height Adjustment System	Central
Cutting Height	30 - 100 mm, 8 Positions
Grass Catcher Volume	60 L
Front Wheels	180 mm
Rear Wheels	250 mm

© Baumr-AG

Some experts believe that the incorrect or prolonged use of almost any product may cause serious injury or death. To help reduce your risk of serious injury or death, refer to the information below. For more information, see www.datastreamserver.com/safety

- Consult all documentation, packaging, and product labelling before use. Note that some products feature documentation available online. It is recommended to print and retain the documentation.
- Before each use, check the product for loose/broken/damaged/missing parts, wear, or leaks (if applicable). Never use a product with loose/broken/damaged/missing parts, wear, or leaks.
- Products must be inspected and serviced (if applicable) by a qualified technician every 6 months. This is based on average residential use by persons of average size and strength, and on a property of average metropolitan size. Use beyond these recommendations may require more frequent inspections/servicing.
- Ensure that all users of the product have completed a suitable industry recognised training course before being allowed access to the product.
- The product has been supplied by a general merchandise retailer that may not be familiar with your specific application or description of application. Be sure to attain third-party approval from a qualified specialist for your application before use, regardless of any assurances from the retailer or its representatives.
- This product is not intended for use where fail-safe operation is required. As with any product (for example, automobile, computer, toaster), there is the possibility of technical issues that may require the repair or replacement of parts, or the product itself. If the possibility of such failure and the associated time it may take to rectify could in any way inconvenience the user, business, or employee, or financially affect the user, business, or employee, then the product is not suitable for your requirements. This product is not intended for use where incorrect operation or a failure of any kind, including but not limited to, a condition requiring product return, replacement, parts replacement, or service by a technician may cause financial loss, loss of employee time or an inconvenience requiring compensation.
- If this product has been purchased in error when considering the information presented here, contact the retailer directly for details of their returns policy, if required.

edisons.com.au

© Baumr-AG. All rights reserved. No part of this document, including descriptive content, concepts, ideas, diagrams, or images may be reproduced or transmitted in any form or by any means, electronic or mechanical, including photocopying, scanning, or recording, or any information storage and retrieval system, without express permission or consent from the publisher.