PRORUN®

HEDGE TRIMMER ATTACHMENT

MODEL: PPA600

Operator's Manual

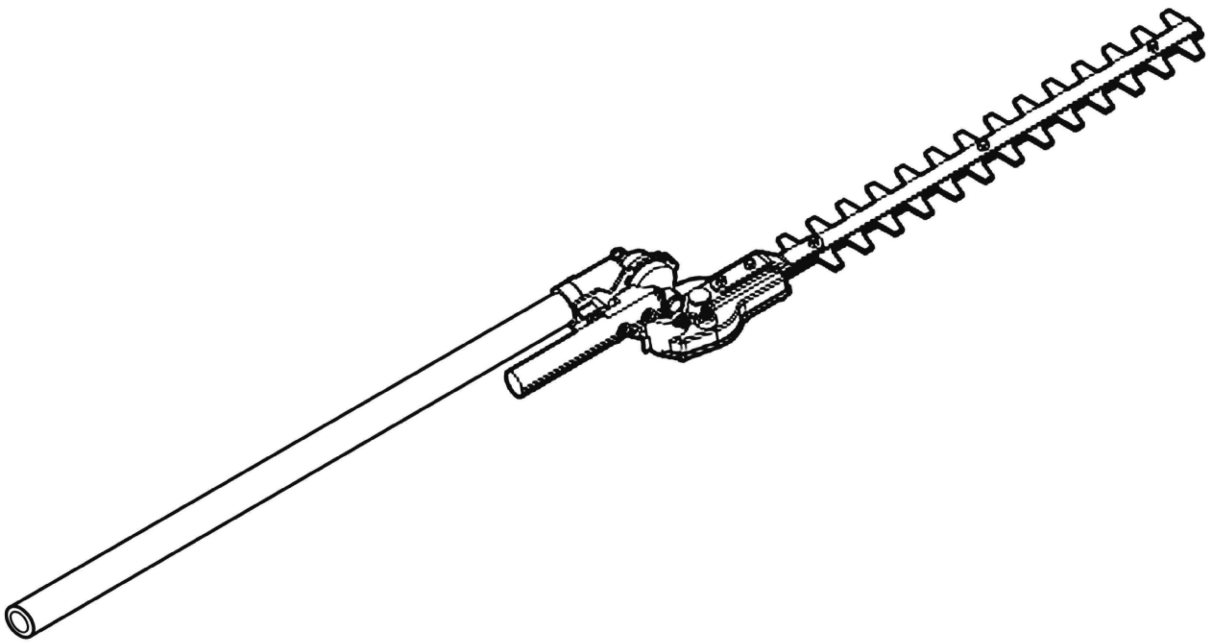

Everything PRORUN

Before operating, read the instructions.

⚠ IMPORTANT - READ CAREFULLY BEFORE USE

⚠ IMPORTANT SAFETY INSTRUCTIONS – SAVE THESE INSTRUCTIONS

WARNING: To reduce the risk of injury, the user must read and understand the Operator's Manual before using this product. Save these instructions for future reference.

Please let us know what you think.
To leave a review and see our full line of products, visit:

proruntech.com ★★★★★
1-844-905-0882, info@proruntech.com

Version: B - Issue Date: 2023/03/31

1. INFORMATION OF SYMBOLS

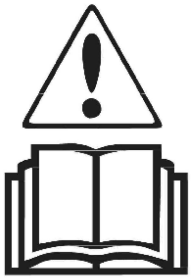

WARNING! The hedge trimmer can be dangerous if used incorrectly or carelessly, and can cause serious or fatal injury to the operator or others. It is extremely important that you read and understand the contents of this owner's manual.

Please read the operator's manual carefully and make sure you understand the instructions before using the machine. Failure to do so can result in serious injury to the operator and/or bystanders.

2. IDENTIFICATION

Components and Controls

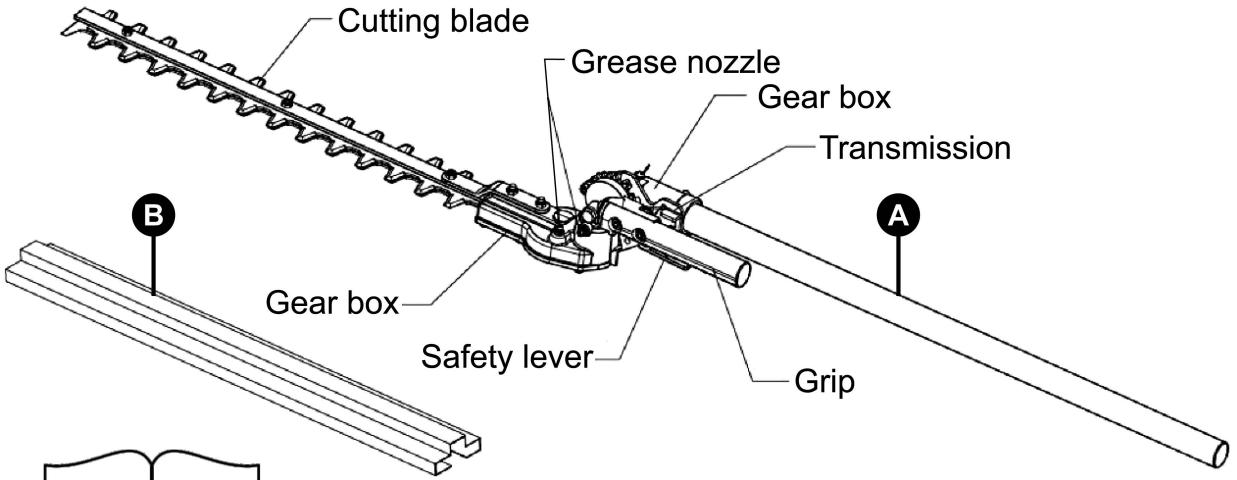

PART	DESCRIPTION
A	HEDGE TRIMMER ASSEMBLY
B	BLADE COVER
C	OPERATOR'S MANUAL

3. CONNECTING THE TUBE

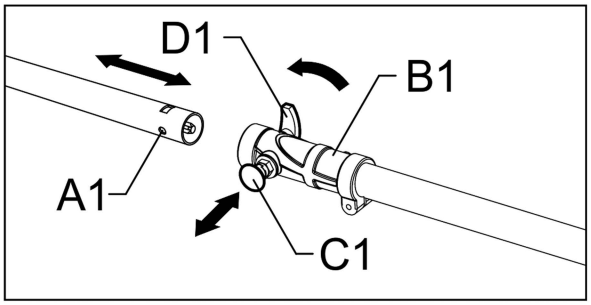

Connecting the attachment to the gas multi-tool powerhead

1.Align the round hole (A1) on the attachment's front tube and the lock pin (C1).

2.Pull the lock pin out while inserting the attachment tube into the connector (B1).
Push the attachment tube to the end until the lock pin aligns with the round hole.

3.Release the lock pin, it will return to its original position automatically and insert itself into the round hole on the attachment tube.

4.Make sure the attachment's tube cannot be rotated after the lock pin is back to its original position.

5.Turn the lock knob (D1) clockwise to tighten the attachment tube securely.

Connecting the attachment to the cordless multi-tool powerhead

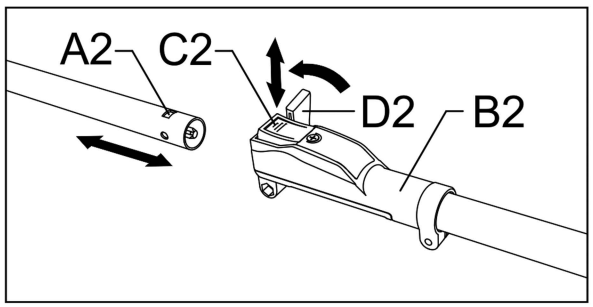

1.Align the rectangular hole (A2) on the attachment's front tube and the lock lever (C2).

2.Press down the lock lever while inserting the front tube into the connector (B2). Push the attachment tube to the end of the connector.

3.Release the lock lever, it will return to its original position automatically and insert the locking tab into the rectangular hole on the attachment tube.

4.Make sure the attachment's tube cannot be rotated after the lock pin is back to its original position.

5.Turn the lock knob (D2) clockwise to tighten the attachment tube securely.

4. FITTING CUTTING HEAD

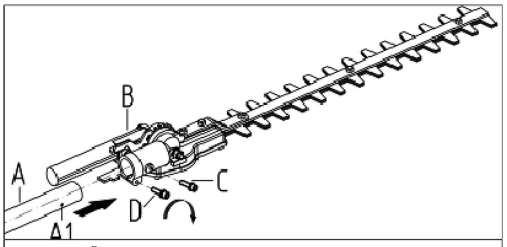

Fit the cutting head (B) on the shaft tube (A) so that the screw hole on the cutting head is aligned with the position hole (A1) on the shaft tube as shown. Then, tighten the lock screw (D) and the position screw (C) securely.

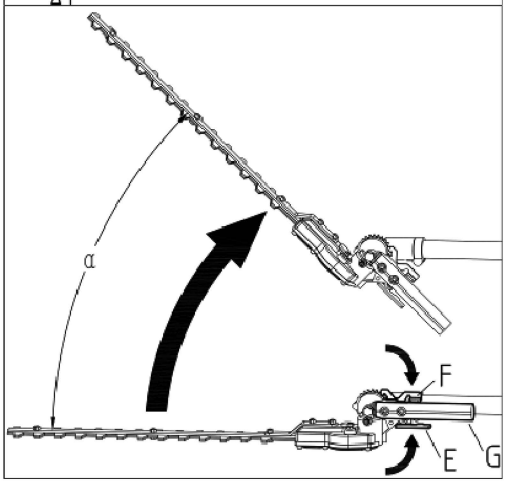

Changing the hedge trimmer angle
Press the safety lever (E). Then press the lock lever (F), at the same time hold the grip (G) and turn the cutting blade to a desired angle (α).

5. CUTTING EQUIPMENT

To ensure good cutting results it is important that the contact pressure between the blades is correct. The contact pressure is adjusted by turning the screws on the underside of the bar clockwise as far as they will go. Then turn the screws anticlockwise a 1/4 turn. Lock the screws using the locking nut on the top of the bar. Check that the screws are loose enough to allow the washers under the screw heads to slide sideways.

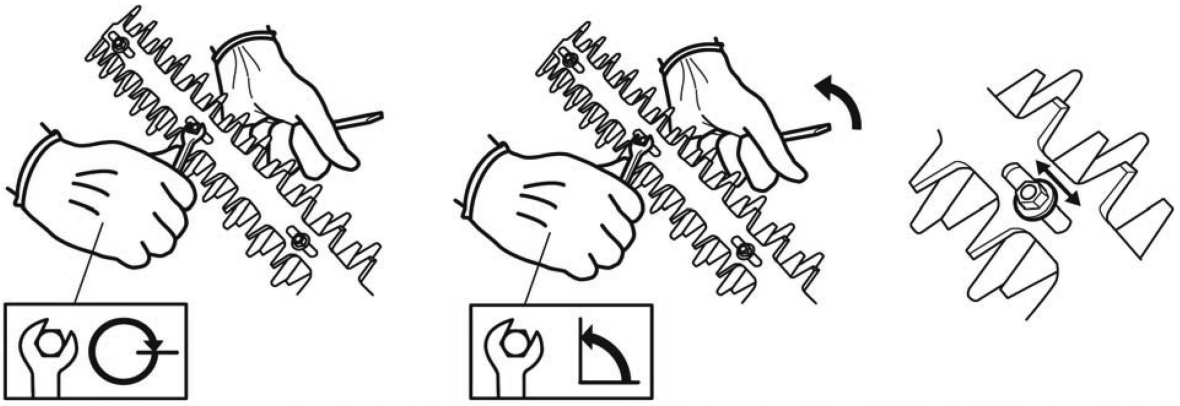

When the blades are correctly adjusted the play between the blades should be 0.008 - 0.016 inches (0.2 - 0.4 mm), measured at the screws.

The edges of the blades are too hard to be filed. Dull blades should be sharpened using a grinder.

Replace the blades if they are bent or damaged.

6. TRIMMING BRANCH OR LEAVES WITH LONG-REACH HEDGE TRIMMER

Work with a swinging action from the bottom upwards when trimming sides.

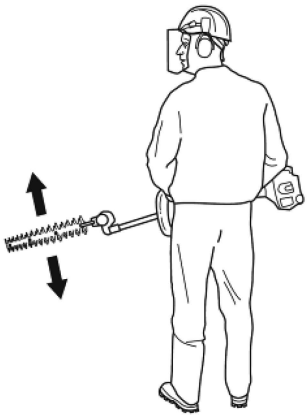

Always work at full throttle.

When trimming a hedge, the engine should always face away from the hedge.

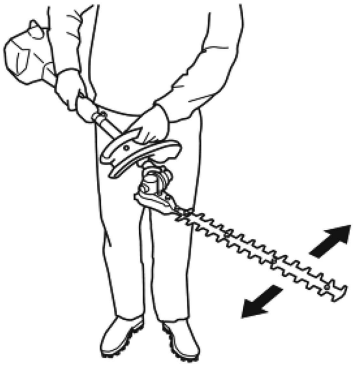

Hold the machine as close to your body as possible to get the best balance.
Make sure that the tip does not touch the ground.
Do not rush the work, but work steadily until all the branches have been cut back cleanly.

The gear box is filled with the right quantity of grease at the factory. However, before using the machine you should check that the previously named components are filled half full with grease.

The grease in the bevel gear does not normally need to be changed except if repairs are carried out.

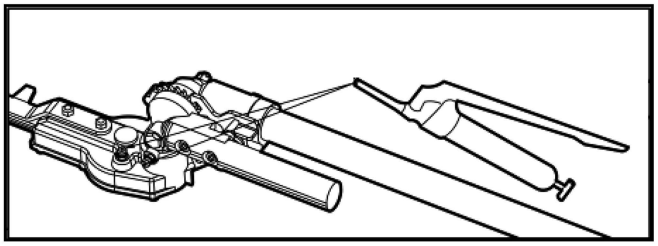

7. TECHNICAL DATA

Technical data	
Blade length, inches	18 inches (460 mm)
Cutting length, inches	15.35 inches (390 mm)

PRORUN / TOPSUN USA
200 Overhill Drive, Suite A
Mooresville, NC 28117
Proruntech.com
info@proruntech.com
Phone: 1-844-905-0882

Zhejiang Zhongjian Technology Co., Ltd
Web: www.topsunpower.cc
E-mail: sales@topsunpower.cc
ADD: No.155 Mingyuan North AVE, Economic Development Zone,
Yongkang, Zhejiang, 321300, P.R.China
Made In China