MAGIC CHEF®

Vacuum Cleaner

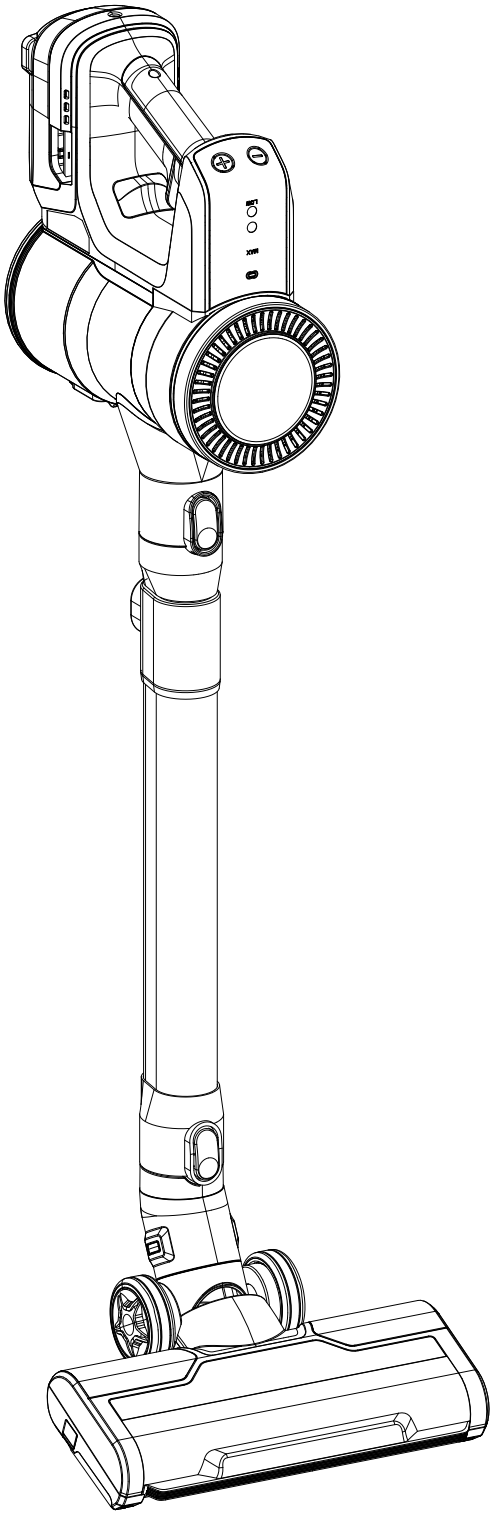

Please read this manual carefully before using Vacuum Cleaner and keep it for future reference.

www.magicchef.com MODEL # MCVPRO

MAGIC CHEF®

PRODUCT REGISTRATION

Thank you for purchasing a Magic Chef® product. The first step to protect your new product is to complete the product registration on our website: www.mcappliance.com/register. The benefits of registering your product include the following:

1. Registering your product will allow us to contact you regarding a safety notification or product update.
2. Registering your product will allow for more efficient warranty service processing if warranty service is required.
3. Registering your product could act as your proof of purchase in the event of insurance loss.

Once again, thank you for purchasing a Magic Chef product.

CONTENTS

Preparation 4
Safety Information 4
Overview 5
Accessories 6
Installation 7

How to use 8
Assembling the vacuum cleaner 8
Operating the vacuum cleaner 9

Maintenance 10
Cleanning vacuum cleaner 10
Cleanning floor brush 11

Appendix 12
Safety Instruction 12
Check List before A/S 13
Prodcut specification 13
FCC Noitce 14
Warranty 19

Safety Information

IMPORTANTS SAFETY INSTRUCTIONS

READ ALL INSTRUCTIONS BEFORE USE

Safety Messages

Your safety and the safety of others are very important.

We have provided many important safety messages in this manual and on your appliance.
Always read and follow all safety messages.

WARNING STATEMENTS

⚠ WARNING

- This appliance is not intended for use by persons (including children) with reduced physical, sensory or mental capabilities, or lack of experience and knowledge, unless they have been given supervision or instruction concerning use of the appliance by a person responsible for their safety.
- Do not allow the appliance to be used as a toy. Close attention is necessary when used by or near children.
- Do not allow children to play with or hang on the appliance.
- Do not use the appliance with a damaged power cord or plug. the cord must be replaced. If the appliance is not working as it should, has been dropped, damaged, left outdoors, or dropped into water, contact MC Appliance Customer Support.
- Do not pull or carry by the cord, use the cord as handle, close a door on the cord, or pull the cord around sharp edges or corners. Do not run the appliance over the cord. Keep the cord away from heated surface.
- Do not unplug by pulling on the cord. To unplug, grasp the plug, not the cord.
- Place the cords from other appliances out of the area to be cleaned.
- Have servicing performed by a qualified repair person using only identical replacement parts. This will ensure that the safety of the product is maintained.
- To reduce the risk of fire, electric shock, or injury.
- Do not use outdoors or on wet surfaces.
- Do not allow to be used as a toy. Close attention is necessary when used by or near children.
- Use only as described in this manual. Use only manufacturer's recommended attachments.
- Do not use with damaged cord or plug. If vacuum cleaner is not working as it should, has been dropped, damaged, left outdoors, or dropped into water.
- Keep cord away from heated surfaces.
- Do not handle plug or vacuum cleaner with wet hands.
- Do not put any objects into openings. Do not use with any openings blocked.
- Keep free of dust, lint, hair, and anything that may reduce airflow.
- This vacuum cleaner creates suction. Keep hair, loose clothing, fingers, and all parts of body away from openings and moving parts.
- Do not pick up anything that is burning or smoking such as cigarettes, matches, or hot ashes.
- Do not use without dust cup, filter, and pre-filter in place.
- Do not use to pick up flammable or combustible liquids such as gasoline, or use in areas where they may be present.
- Store your vacuum cleaner indoors in a cool, dry area.
- Keep your work area well lit.
- Unplug electrical appliances before vacuuming them.

Overview

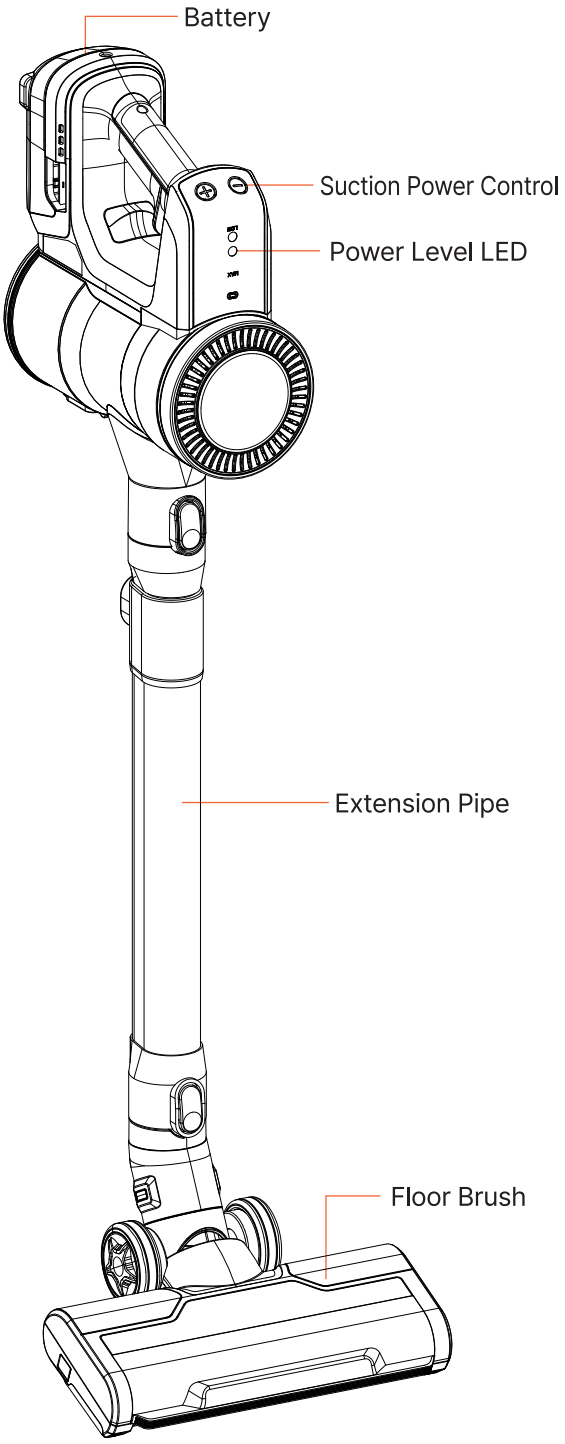
Battery
Suction Power Control
Power Level LED
Extension Pipe
Floor Brush

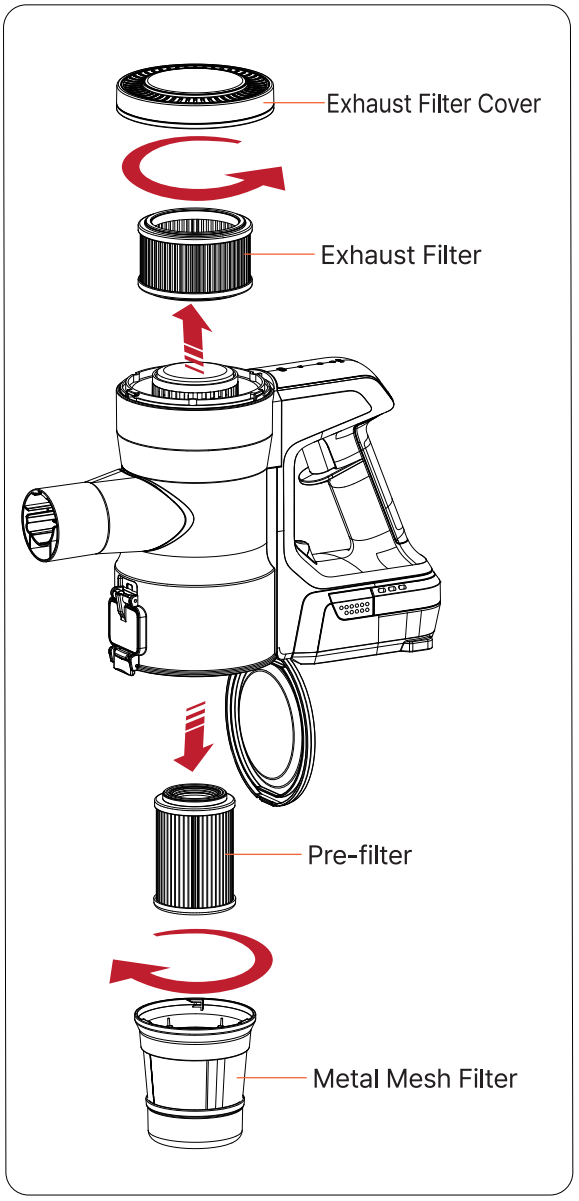
Exhaust Filter Cover
Exhaust Filter
Pre-filter
Metal Mesh Filter

Overview

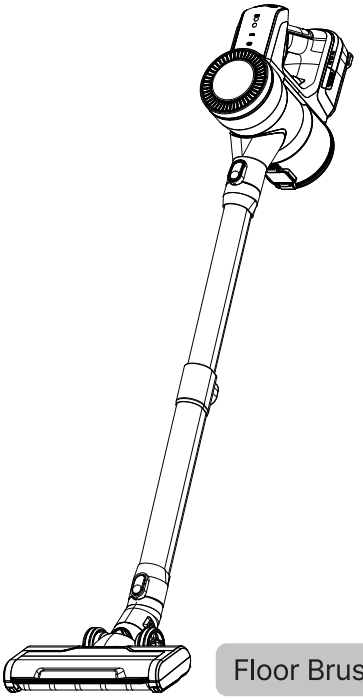

Floor Brush

Accessories

The acessories may differ depending on the models.

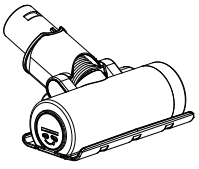

Bedding Brush

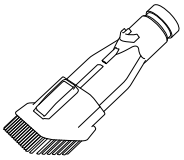

Combination Tool

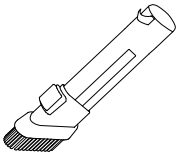

Crevice Tool



Accessory Bag

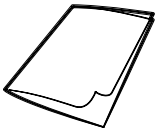

Manual

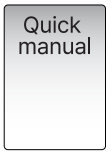

Quick Manual



Exhaust Filter



Pre-filter

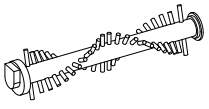

Carpet Brush

Installation

Installing the charging station

Install at least 2 inches from wall on flat floor.

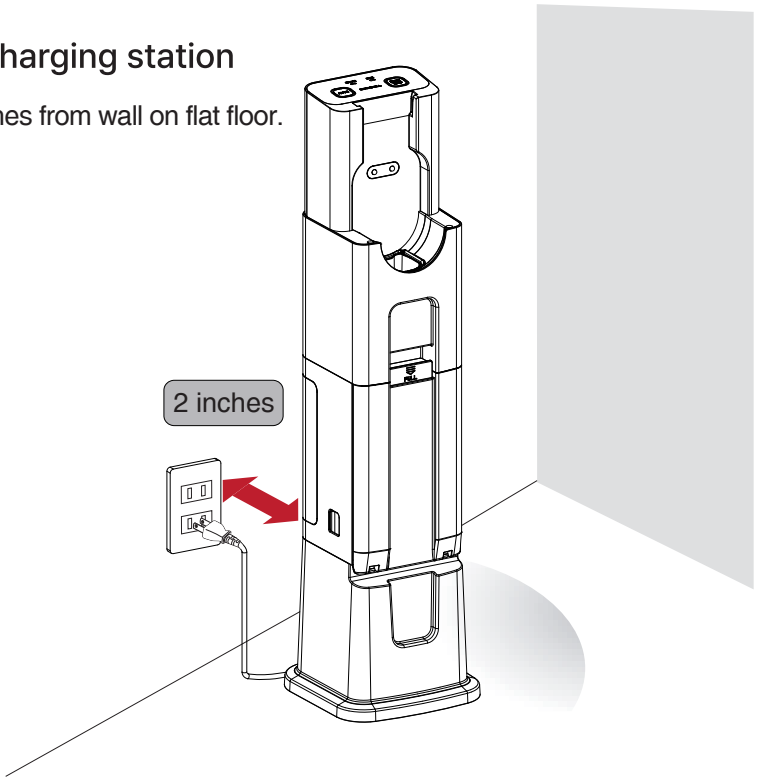

Charging the vacuum cleaner

Place the vacuum cleaner to charge.

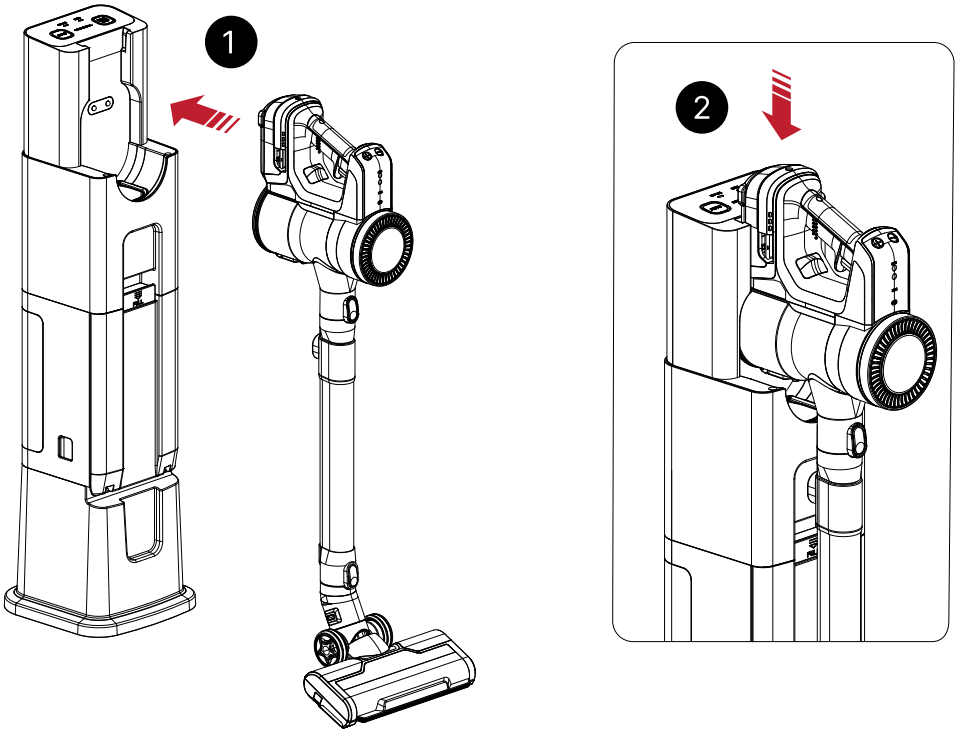

Operation

Assembling the vacuum cleaner

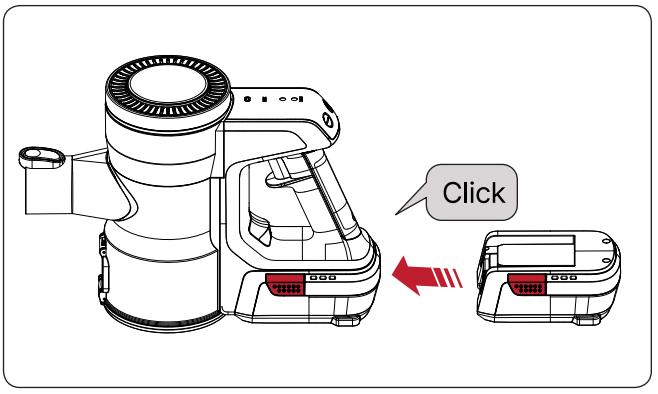

Inserting the battery

Push the battery to the end until you hear it click.

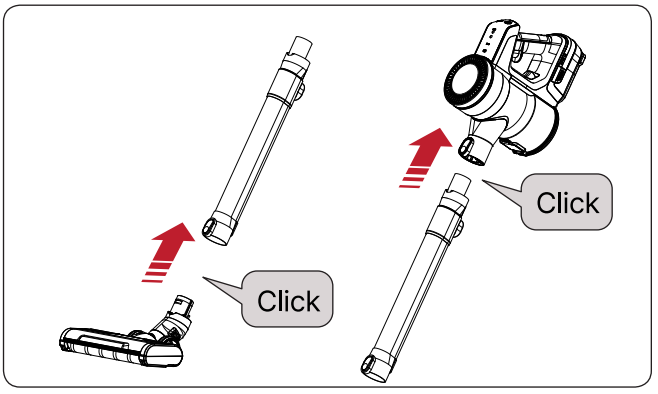

Assembling the extension pipe

Firmly attach the extension pipe and floor brush on the body.

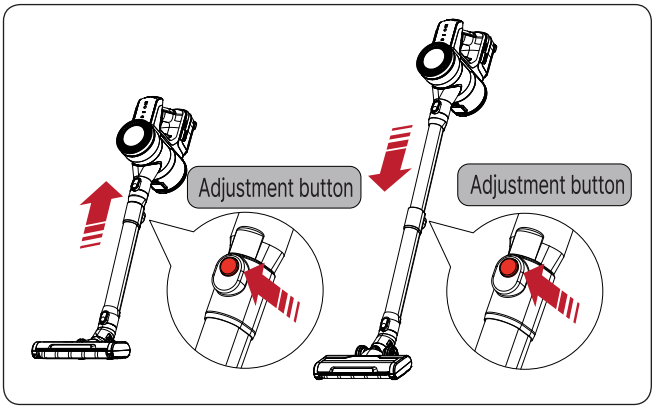

Adjust the extension pipe

Adjust the extension pipe by pressing the length adjustment button and sliding until it click into place.

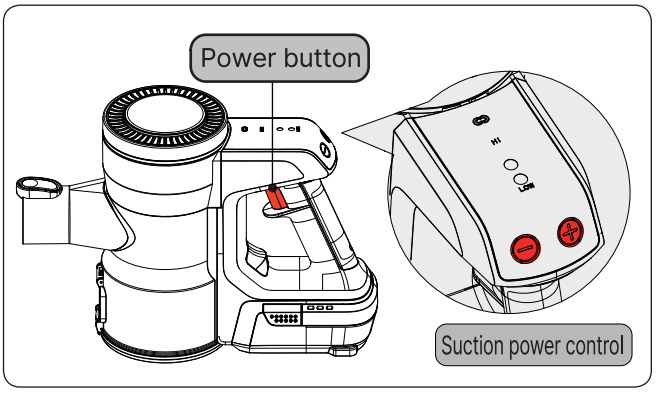

Adjusting the suction power

Press the power button to activate.
Touch the +, - button to adjust suction power.

Operation

Operating the vacuum cleaner

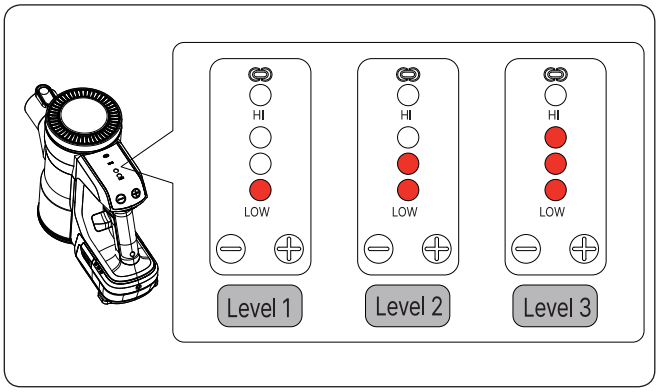

Suction power level LED

Displays the current mode.
(Level 1, Level 2, Level 3)

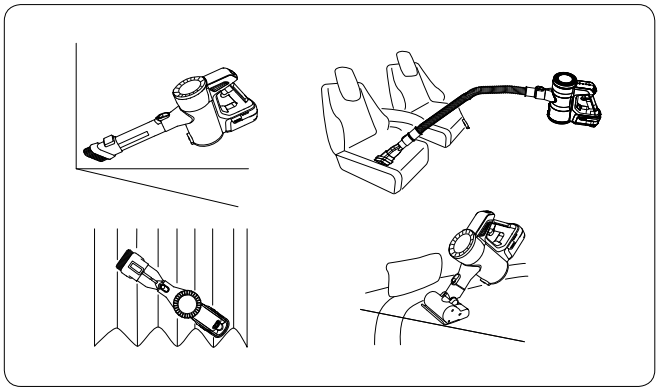

Using the accessories

Use the Crevice tool to remove dust from corners or narrow spaces.
Combination tool serves two functions:
•Use in Crevice Mode to clean flat surfaces such as desks, sofas, mattress
•Use in Brush Mode to clean delicate surfaces such as picture frames or glass tables.
To toggle between two modes, press down button and push the brush section forward.
Use the bedding tool to clean mattresses, sofas, blankets.

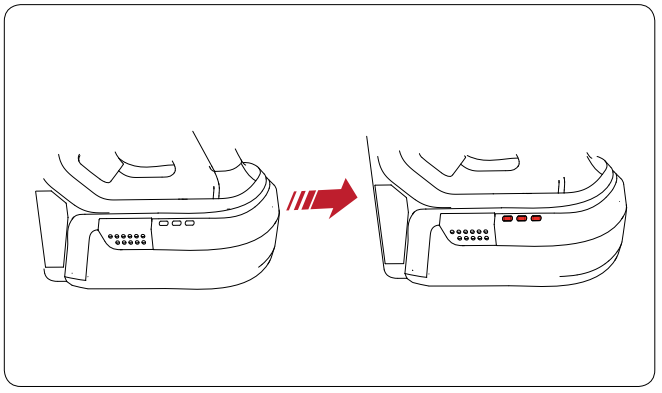

Charing the battery

When charging starts, the battery level indicator turns on.

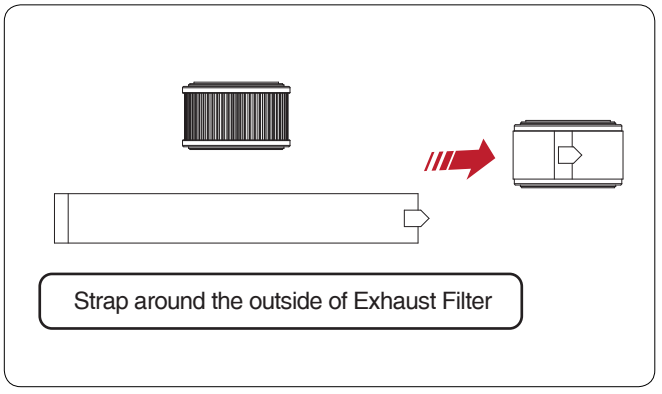

Carbon filter

The carbon filter reduces the odor.

Maintenance

Cleaning the dust bin

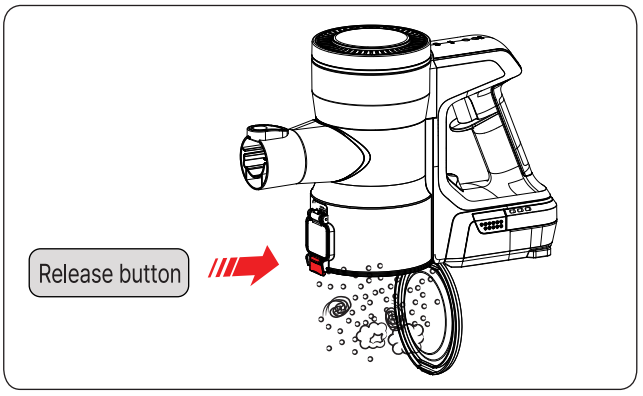

Press the dust bin cover release button
and throw away the dust.

Removing the dust bin

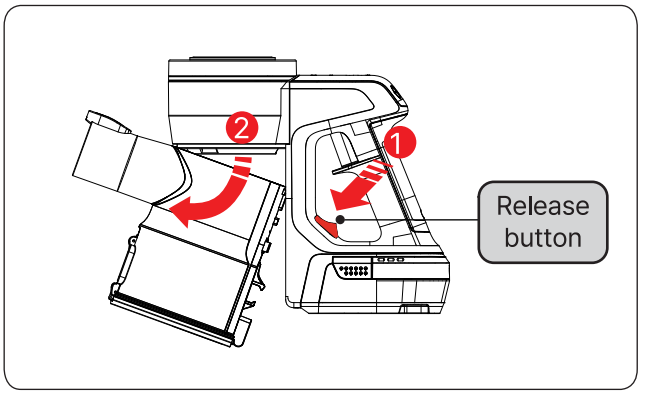

Press the dust bin release button and
remove the dust bin at an angle

Removing metal mesh filter

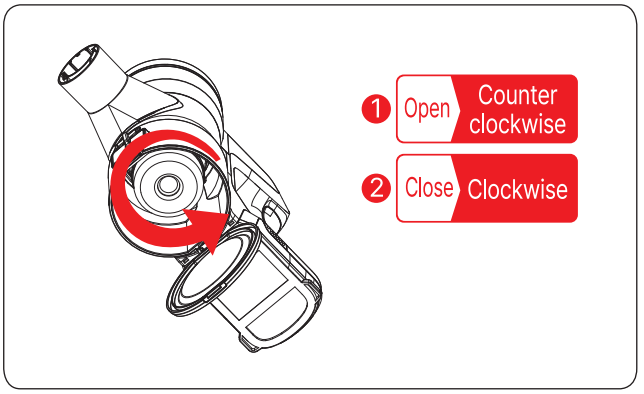

Turn the metal mesh filter counterclockwise to remove.

Removing pre-filter

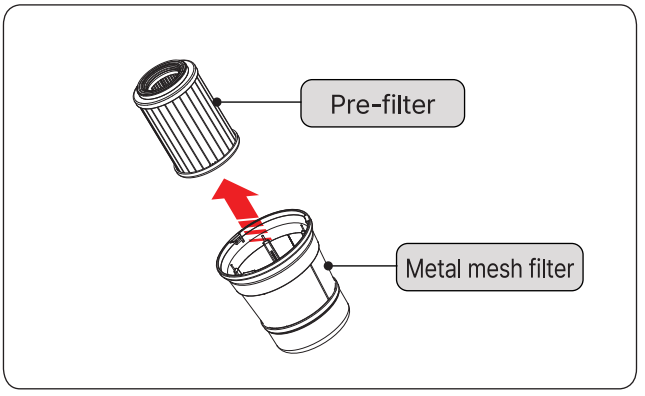

Pull the pre-filter.

Removing exhaust filter

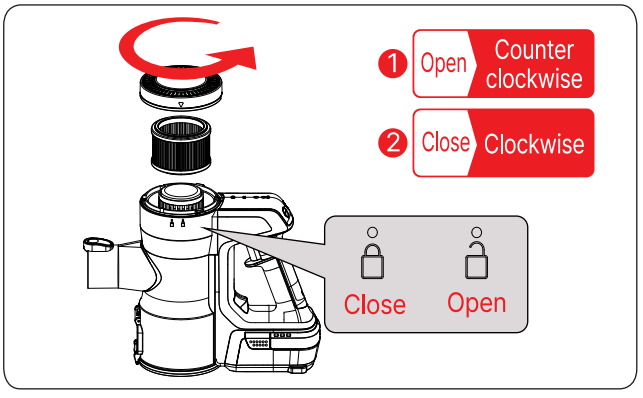

Remove the exhaust filter cover and
remove the exhaust filter.

Cleaning filter

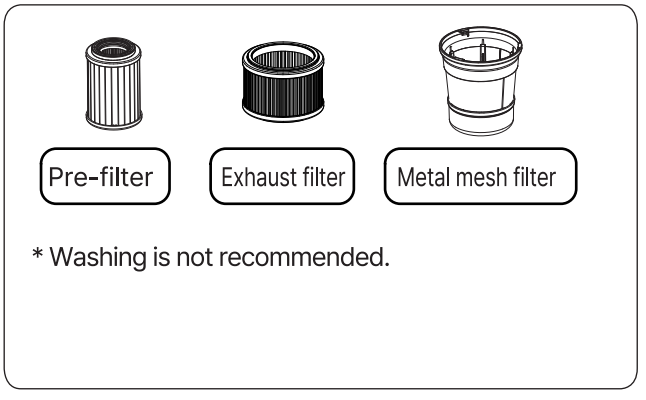

* Washing is not recommended.

Shake lightly to remove dust.

Maintence

Floor brush

1

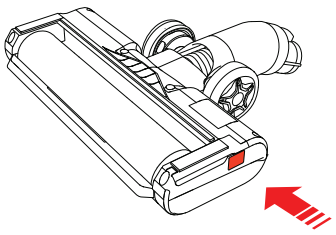

Press the side release button.

2

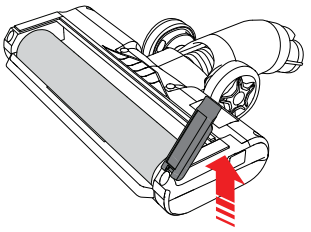

Turn the cap upwards.

3

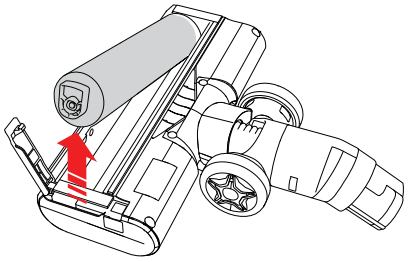

Raise the brush at an angle to separate it.

4

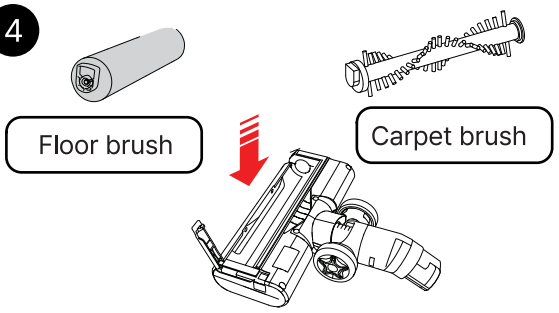

Assemble after cleaning the brush

Bedding brush

1

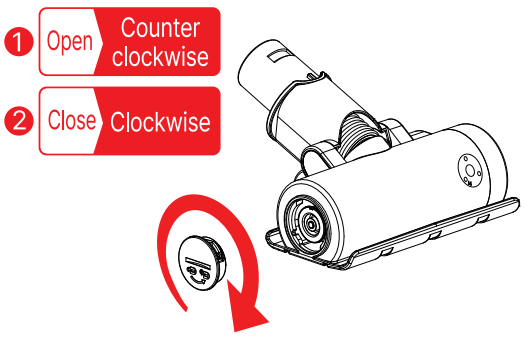

Insert a coin into the slot to disassemble the brush roll.

2

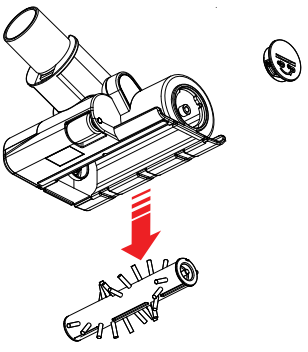

Disassemble the brush roll.

Safety Instruction

READ ALL INSTRUCTIONS BEFORE USING YOUR VACUUM.
When using an electrical appliance, basic precautions should be observed, including the following:

TO REDUCE THE RISK OF FIRE, ELECTRIC SHOCK OR INJURY:

» Keep hair, loose clothing, fingers, and all parts of body away from openings and moving parts. Brush continues to rotate when in use.
» Brush continues to turn while product is turned ON and handle is in use. To avoid damage to carpet, rugs, furniture and flooring, avoid tipping cleaner or setting it on furniture, fringed area rugs, or carpeted stairs during tool use.
» Do not expose to rain. Store indoors.
» Do not use on wet surfaces.
» Do not allow to be used as a toy.
» Close attention is necessary when used by or near children.
» Children should be supervised to ensure that they do not play with the appliance.
» Plastic film can be dangerous. To avoid danger of suffocation, keep away from children.
» Do not immerse in water or liquid.
» Do not use for any purpose other than described in this user guide.
» Use only manufacturer's recommended attachments.
» If appliance is not working as it should, has been dropped, damaged, left outdoors, or dropped into water, have it repaired at an authorized service center.
» Do not charge the unit outdoors.
» Do not incinerate the appliance even if it severely damaged. The batteries can explode in a fire.
» Do not put foreign objects into openings forcefully.
» Do not use with any opening blocked.
» Keep openings free of dust, lint, hair and anything that may reduce airflow.
» Use extra care when cleaning stairs.
» Do not pick up flammable materials (lighter fluid, gasoline, kerosene, etc.) or use in the presence of explosive liquids or vapors.
» Always turn OFF this appliance before connecting or disconnecting the motorized nozzle.
» Do not pick up toxic material (chlorine bleach, ammonia, drain cleaner, etc.).
» Do not use vacuum cleaner in an enclosed space filled with vapors given off by oil-based paint, paint thinner, some moth-proofing substances, flammable dust, or other explosive or toxic vapors.
» Do not pick up hard or sharp objects such as glass, nails, screws, coins, etc.
» Do not pick up anything that is burning or smoking, such as cigarettes, matches or hot ashes.
» Do not use without Dust bin or filters in place.
» Use only on dry, indoor surfaces.
» Keep appliance on a level surface.
» Disconnect battery pack before cleaning or servicing.
» If the charger supply cord is damaged, it must be replaced by the manufacturer, its service agent or similarly qualified person in order to avoid a hazard.
» Do not pull or carry charger by cord,use cord as a handle,close door on cord, or pull cord around sharp edges or corners.
» Keep charger cord away from heated surfaces.
» To unplug, grasp the charger plug, not the cord.
» Do not handle charger plug or appliance with wet hands.
» Battery pack, charging port on the hand vac and charger output are not to be short-circuited.
» The appliance must be disconnected from the battery charger when removing the battery.
» The battery is to be disposed of safely.
» Do not recharge, disassemble, heat above 60°C/140°F, or incinerate.
» Keep batteries out of reach of children.
» Dispose of used batteries promptly.
» This appliance contains batteries that are only replaceable by skilled persons.
» Prevent unintentional starting. Ensure the switch is in the OFF position
before picking up or carrying the appliance. Carrying the appliance with your finger on the switch or energizing appliance that have the switch on invites accidents.
» Under abusive conditions, liquid may be ejected from the battery; avoid contact. If contact accidentally occurs, flush with water. If liquid contacts eyes, additionally seek medical help. Liquid ejected from the battery may cause irritation or burns.
» Do not use appliance that is damaged or modified. Damaged or modified batteries may exhibit unpredictable behavior resulting in fire, explosion or risk of injury.
» Do not expose appliance to fire or excessive temperature. Exposure to fire or temperature above 130°C/ 266°F may cause explosion.
» Follow all charging instructions and do not charge the appliance outside of the temperature range specified in the instructions. Charging improperly or at temperatures outside of the specified range may damage the battery and increase the risk of fire.
» Have servicing performed by a qualified repair person using only identical replacement parts. This will ensure that the safety of the product is maintained.
» Do not modify or attempt to repair the appliance except as indicated in the instructions for use and care.
» Keep the temperature range of between 4-40°C/40-104°F when charging battery, storing unit or during use.
» Recharge only with the charger specified by the manufacturer. A charger that is suitable for one type of battery pack may create a risk of fire when used with another battery pack.
» Unplug charger from electrical socket when not in use, before cleaning, maintaining or servicing the appliance, and if your appliance has an accessory tool with a moving brush, before connecting or disconnecting the tool.
» This appliance contains batteries that are non-replaceable.
» The battery must be removed from the appliance before it is scrapped.
» Do not use with damaged cord or charger. If appliance is not working as it should, has been dropped, damaged, left outdoors, or dropped into water, return it to a service center.
» Turn OFF all controls before unplugging.

Check List Before for A/S

Save time and money by checking the following before calling for service.

Problem	Possible Cause & Solution
Does not operate.	· The power plug is not connected. Please connect the power plug. · The vacuum cleaner is not plugged in properly. · Please take the vacuum cleaner and plug it back in.
Does not charge	· There is a foreign object on the charging terminal. · Wipe off foreign substances from the charging terminal. · The vacuum cleaner is not plugged in properly. · Please take the vacuum cleaner and plug it back in.

Specifications

List	Description
Model	MCVPRO
Product	Vacuum cleaner
Battery	21.6 V
Power	300 W
Home Page	www.mcappliance.com
Customer Support	888-775-0202
Country of origin	Made in China

FCC notice

This equipment has been tested and found to comply with the limits for a Class B digital device, pursuant to part 15 of the FCC Rules.

These limits are designed to provide reasonable protection against harmful interference in a residential installation.

This equipment generates, uses and can radiate radio frequency energy and, if not installed and used in accordance with the instructions, may cause harmful interference to radio communications.

However, there is no guarantee that interference will not occur in a particular installation.

If this equipment does cause harmful interference to radio or television reception, which can be determined by turning the equipment off and on, the user is encouraged to try to correct the interference by one or more of the following measures:

— Reorient or relocate the receiving antenna.

— Increase the separation between the equipment and receiver.

— Connect the equipment into an outlet on a circuit different from that to which the receiver is connected.

— Consult the dealer or an experienced radio/TV technician for help.

FCC notice

Supplier's Declaration of Conformity

47 CFR § 2.1077 Compliance Information

Model : MCVPRO

U.S. Contact Information :

Company Name: Baihetian Innovative Solutions

Street Address: 6837 Chase Rd

City/Province/Zip: Dearborn, MI 48126

Telephone No: 313-395-3113

Email: ken.young@baihetiansolutions.com

FCC Compliance Statement

This device complies with Part 15 of the FCC Rules.

Operation is subject to the following two conditions:

(1) This device may not cause harmful interference, and

(2) this device must accept any interference received,

including interference that may cause undesired operation.

LIMITED WARRANTY

MC Appliance Corporation warrants each new Vacuum Cleaner to be free from defects in material and workmanship, and agrees to remedy any such defect or to furnish a new part(s), at the company's option, for any part(s) of the unit that has failed during the warranty period. Parts and labor expenses are covered on this unit for a period of one year from the date of purchase. A copy of the dated sales receipt/invoice is required to receive warranty service, replacement or refund.

This warranty covers appliances in use within the contiguous United States, Alaska, Hawaii and Puerto Rico. This warranty does not cover the following:

- Damages due to shipping damage or improper installation.
- Damages due to misuse or abuse.
- Content losses due to failure of the unit.
- Repairs performed by unauthorized service agents.
- Service calls that do not involve defects in material and workmanship such as instructions on proper use of the product or improper installation.
- Replacement or resetting of house fuses or circuit breakers.
- Failure of this product if used for other purposes than its intended purpose.
- Disposal costs for any failed unit not returned to our factory.
- Any delivery/installation costs incurred as the result of a unit that fails to perform as specified.
- Expenses for travel and transportation for product service if your appliance is located in a remote area where service by an authorized service technician is not available.
- The removal and reinstallation of your appliance if it is installed in an inaccessible location or is not installed in accordance with published installation instructions.
- Refunds for non repairable products are limited to the price paid for the unit per the sales receipt.
- This warranty is non transferable. This warranty applies only to the original purchaser and does not extend to any subsequent owner(s).

Limitations of Remedies and Exclusions:

Product repair in accordance with the terms herein, is your sole and exclusive remedy under this limited warranty. Any and all implied warranties including merchantability and fitness for a particular purpose are hereby limited to one year or the shortest period allowed by law. MC Appliance Corporation is not liable for incidental or consequential damages and no representative or person is authorized to assume for us any other liability in connection with the sale of this product. Under no circumstances is the consumer permitted to return this unit to the factory without the prior written consent of MC Appliance Corporation.

Some states prohibit the exclusion or limitation of incidental or consequential damages, or limitations on implied warranties. This warranty gives you specific legal rights, and you may also have other rights which vary from state to state.

WARRANTY PERIOD	
Vacuum Cleaner	Motor (Suction Motor)
One (1) year from the date of original retail purchase	Three (3) years from the date of original retail purchase
Parts and Labor (internal/functional parts only)	Parts only (You will be charged for labor)

For Service or Assistance please call **888-775-0202** or visit us on the web at **www.mcappliance.com** to request warranty service or order parts.



CNA International, Inc. d/b/a MC appliance Corporation. all rights reserved.
Magic Chef® logo is a registered trademark of CNA International, Inc.

MAGIC CHEF®

Tower

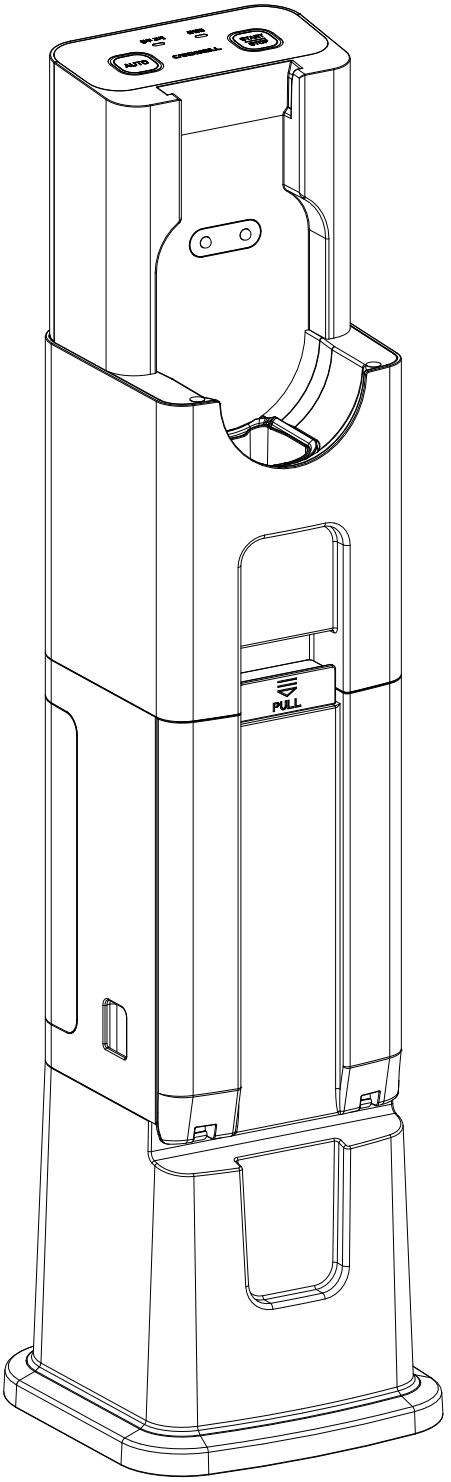

Please read this manual carefully before using Tower and keep it for future reference.

www.magicchef.com MODEL # MCVTOWER

MAGIC CHEF®

PRODUCT REGISTRATION

Thank you for purchasing a Magic Chef® product. The first step to protect your new product is to complete the product registration on our website: www.mcappliance.com/register. The benefits of registering your product include the following:

1. Registering your product will allow us to contact you regarding a safety notification or product update.
2. Registering your product will allow for more efficient warranty service processing if warranty service is required.
3. Registering your product could act as your proof of purchase in the event of insurance loss.

Once again, thank you for purchasing a Magic Chef product.

CONTENTS

Preparation 4
Safety Information 4
Overview 5
Accessories 6
Installation 7

How to use 8
How to charge 8
Control panel 9
Auto / Manual mode 10
Flexible tube 11

Maintenance 12
Replace Dust Bin 12
Filter & Gate 13

Appendix 14
Safety Instruction 14
Check List before A/S 15
Prodcut specification 15
FCC Noitce 16
Warranty 19

Safety Information

IMPORTANTS SAFETY INSTRUCTIONS

READ ALL INSTRUCTIONS BEFORE USE

Safety Messages

Your safety and the safety of others are very important.

We have provided many important safety messages in this manual and on your appliance.
Always read and follow all safety messages.

WARNING STATEMENTS

⚠ WARNING

- This appliance is not intended for use by persons (including children) with reduced physical, sensory or mental capabilities, or lack of experience and knowledge, unless they have been given supervision or instruction concerning use of the appliance by a person responsible for their safety.
- Do not allow the appliance to be used as a toy. Close attention is necessary when used by or near children.
- Do not allow children to play with or hang on the appliance.
- Do not use the appliance with a damaged power cord or plug. If damaged, the cord must be replaced. If the appliance is not working as it should, has been dropped, damaged, left outdoors, or dropped into water, return it to an CATCHWELL.
- Do not pull or carry by the cord, use the cord as handle, close a door on the cord, or pull the cord around sharp edges or corners. Do not run the appliance over the cord. Keep the cord away from heated surface.
- Do not unplug by pulling on the cord. To unplug, grasp the plug, not the cord.
- Place the cords from other appliances out of the area to be cleaned.
- Have servicing performed by a qualified repair person using only identical replacement parts. This will ensure that the safety of the product is maintained.
- To reduce the risk of fire, electric shock, or injury.
- Do not use outdoors or on wet surfaces.
- Do not allow to be used as a toy. Close attention is necessary when used by or near children.
- Use only as described in this manual. Use only manufacturer's recommended attachments.
- Do not use with damaged cord or plug. If vacuum cleaner is not working as it should, has been dropped, damaged, left outdoors, or dropped into water.
- Keep cord away from heated surfaces.
- Do not handle plug or vacuum cleaner with wet hands.
- Do not put any objects into openings. Do not use with any openings blocked.
- Keep free of dust, lint, hair, and anything that may reduce airflow.
- This vacuum cleaner creates suction. Keep hair, loose clothing, fingers, and all parts of body away from openings and moving parts.
- Do not pick up anything that is burning or smoking such as cigarettes, matches, or hot ashes.
- Do not use without dust cup, filter, and pre-filter in place.
- Do not use to pick up flammable or combustible liquids such as gasoline, or use in areas where they may be present.
- Store your vacuum cleaner indoors in a cool, dry area.
- Keep your work area well lit.
- Unplug electrical appliances before vacuuming them.

Overview

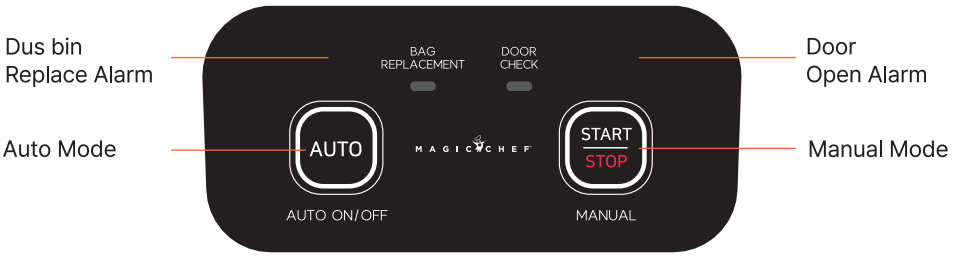
Dus bin
Replace Alarm
Auto Mode
BAG
REPLACEMENT
DOOR
CHECK
AUTO
AUTO ON/OFF
MAGIC CHEF
START
STOP
MANUAL
Door
Open Alarm
Manual Mode

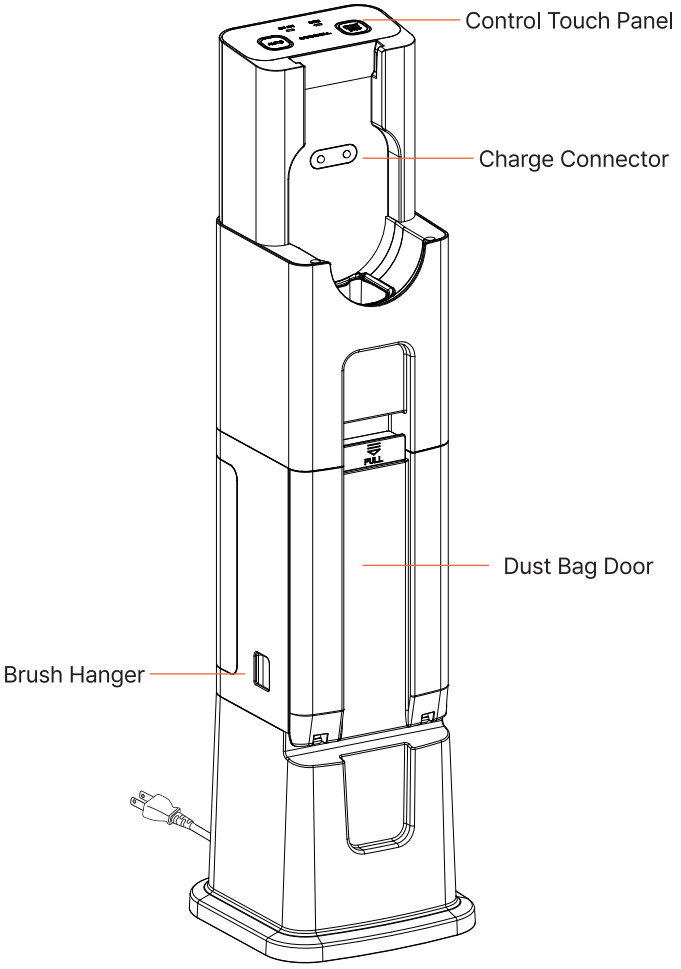
Control Touch Panel
Charge Connector
Dust Bag Door
Brush Hanger

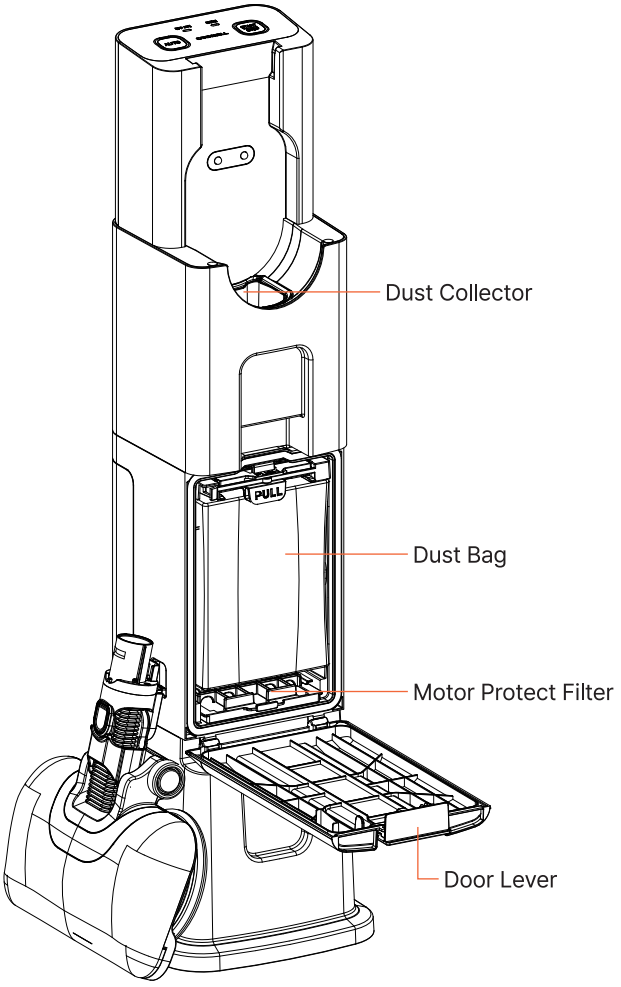
Dust Collector
PULL
Dust Bag
Motor Protect Filter
Door Lever

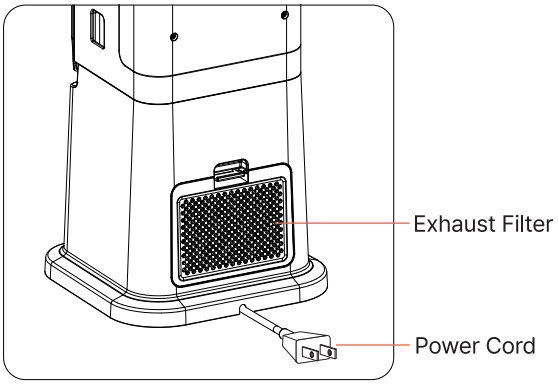
Exhaust Filter
Power Cord

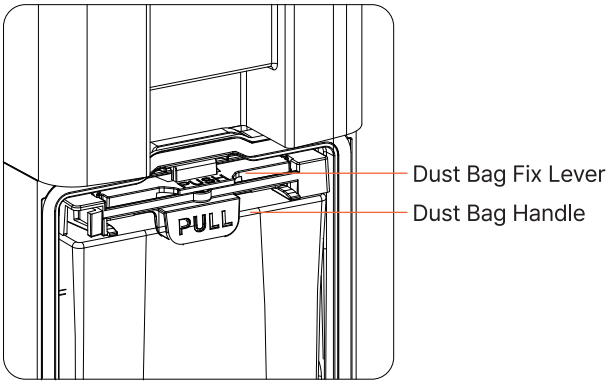
PULL
Dust Bag Fix Lever
Dust Bag Handle

Overview

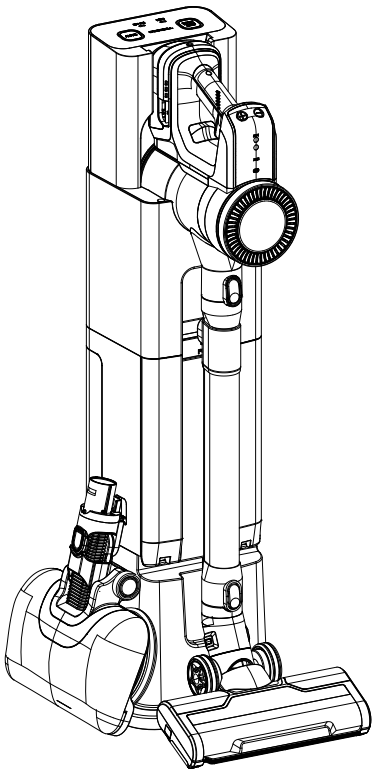

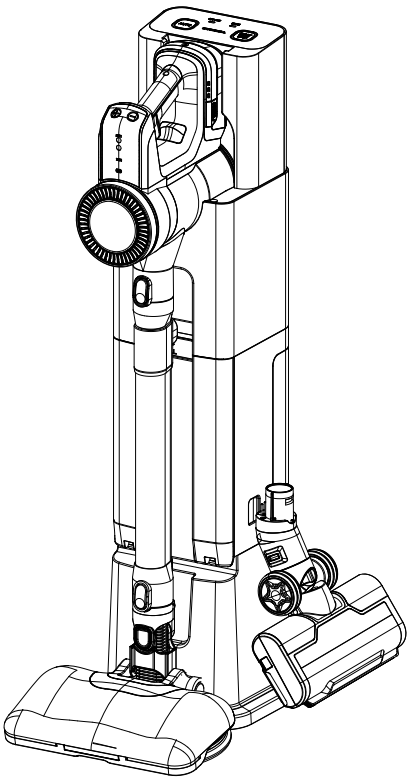

Accessories

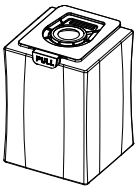

Spare Dust Bin

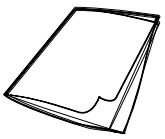

Manual



Quick Manual



Cable Velcro

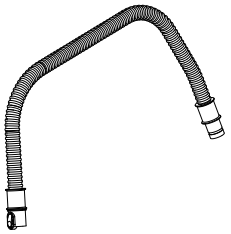

Flexible Tube

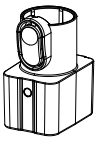

Flexible Tube Connector

Installation

1 Install at least 2 in. from wall on flat floor.

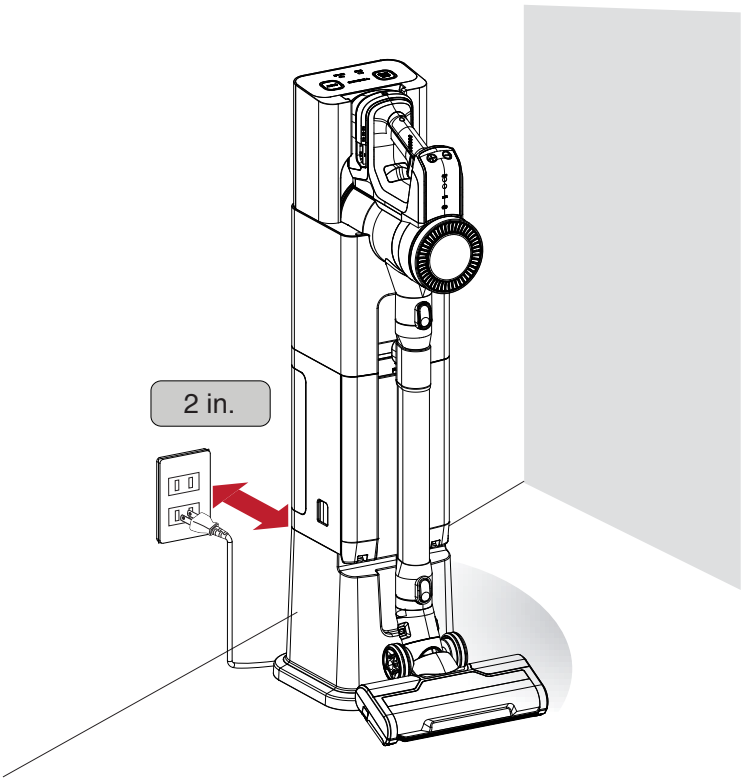

2 When Magic Tower plugged in, White LED lights on Manual Mode

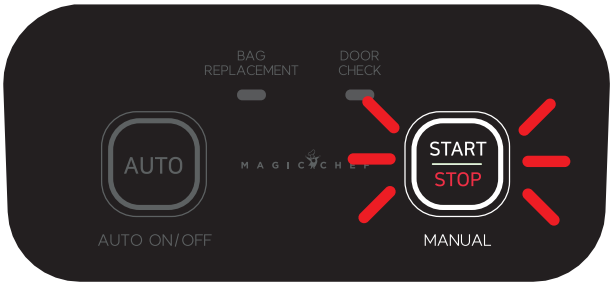

How to charge

1 Place vacuum cleaner to charge

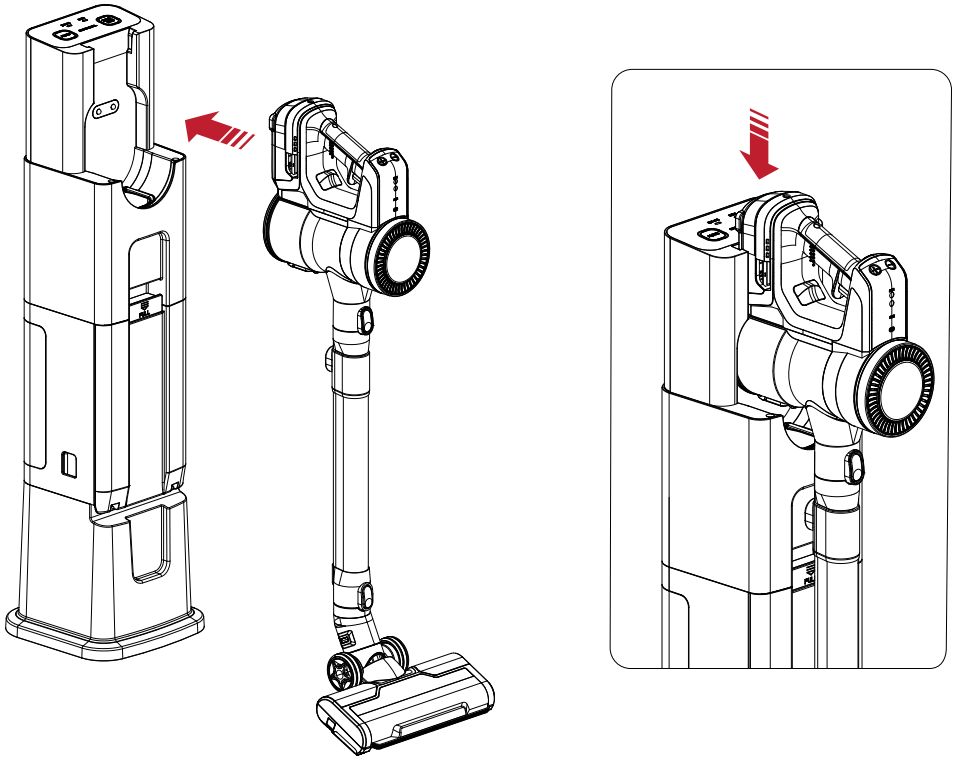

2 3 steps white LED light
indicate battery indicator.

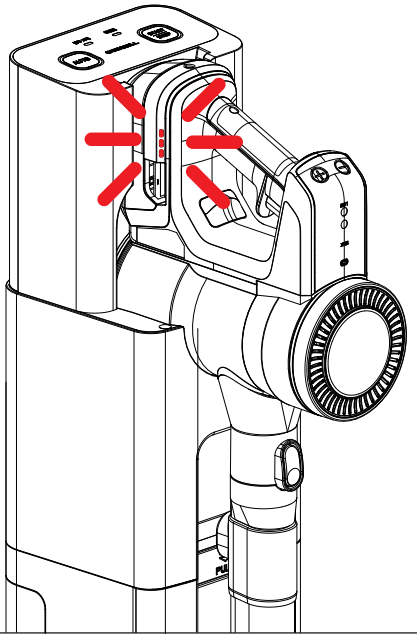

Control Panel

1 Auto Mode ON / OFF

Touch Auto Mode Panel to ON / OFF

Auto Mode empty the bin
for 20 seconds automatically



2 Manual Mode ON / OFF

Touch Manual Mode Panel to start

Manual Mode empty the bin
for 20 second. While it works, you can touch
the panel to stop

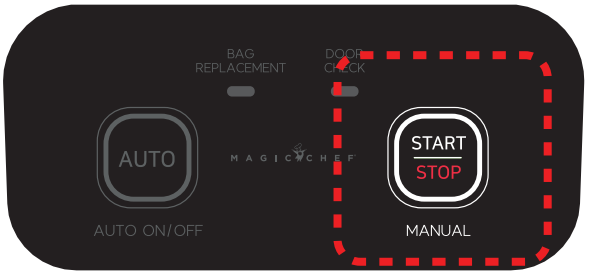

3 Dust Bin Replace Alarm

LED light on when Dust Bin is full.
Please replace to a new Dust Bin. Suggest
replace it once every 3 months for the best
condition

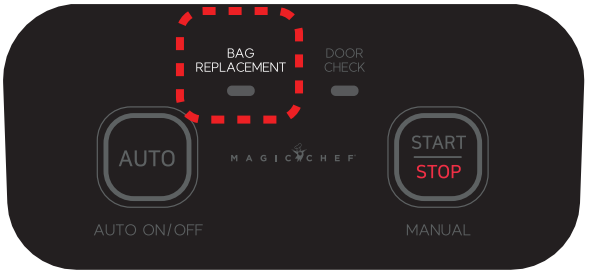

4 Door Open Alarm

For safety, Tower only works when the dust bin
door is closed. Please check the door is closed
when this alarm is on

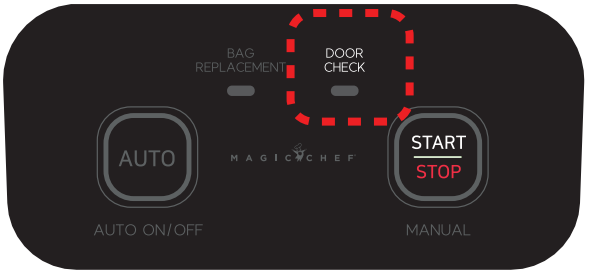

Auto Mode / Manual Mode

Use Auto Mode

1 Touch Auto Panel on

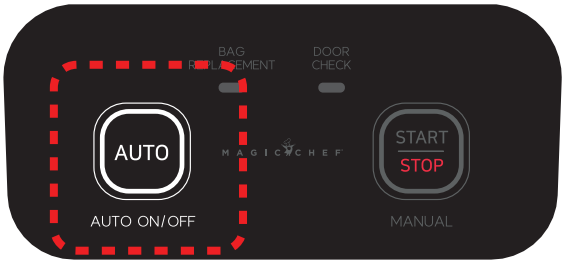

2 Place vacuum cleander

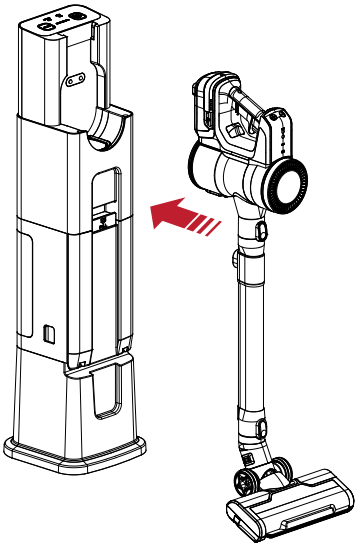

Use Manual Mode

1 Place vacuum cleander

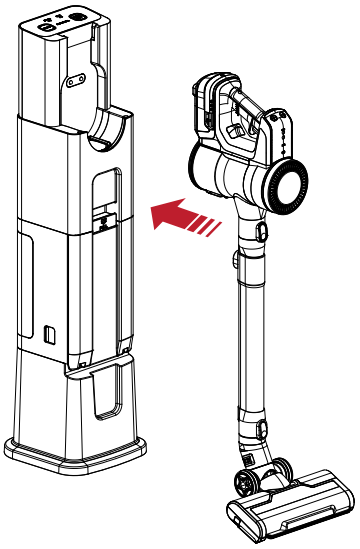

2 Touch Start

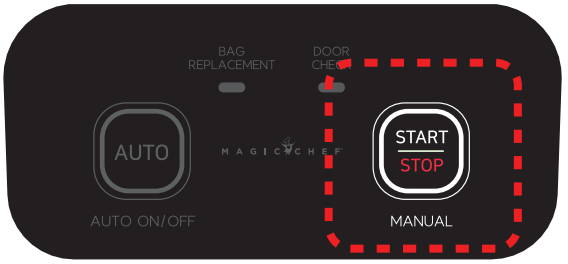

Flexible Tube

1 Connet flexible tube and connector

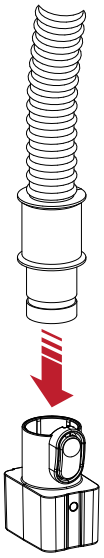

2 Connect brush

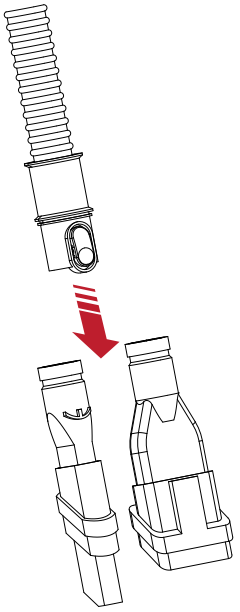

3 Connect Tower and connector

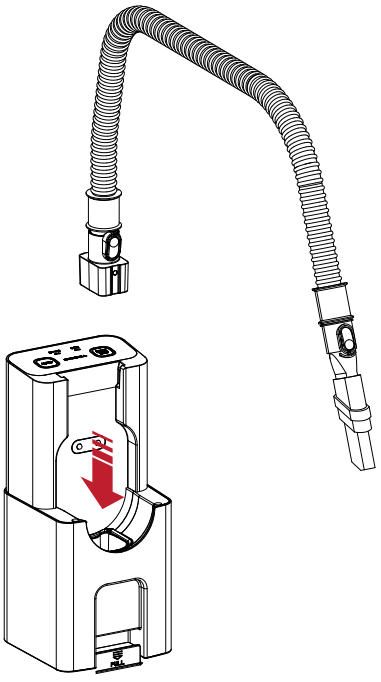

4 Touch Start
[Flexible Mode works for 60 second]

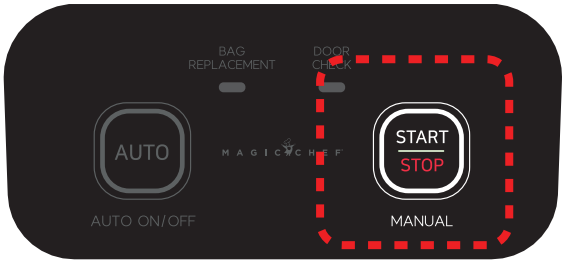

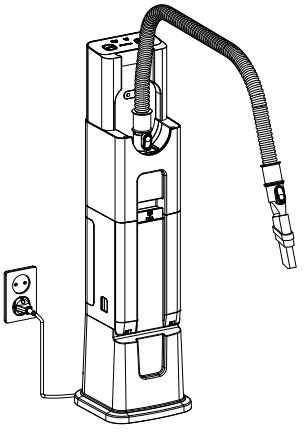

Replace Dust Bag

1 Pull Dust bin Door Lever

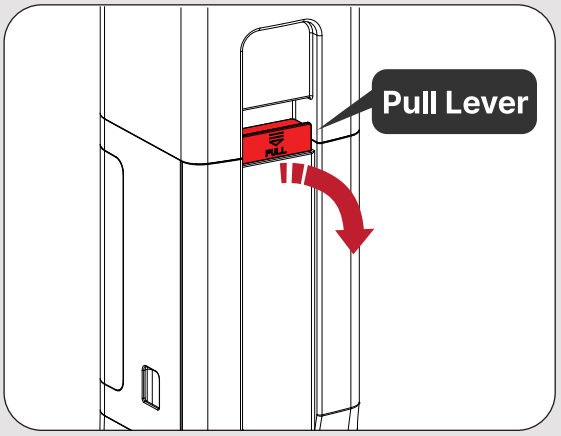

2 Press PUSH Button

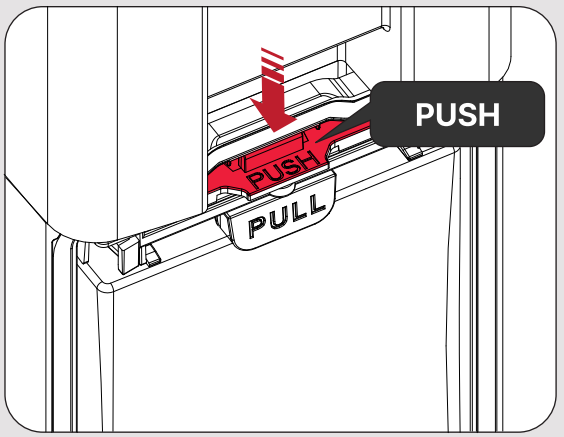

3 Take Dust Bag out

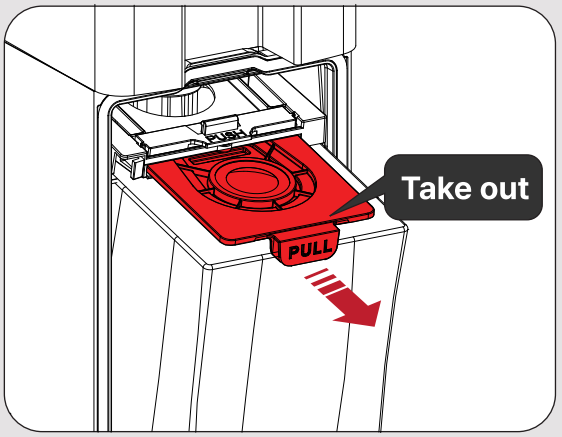

4 Insert a new Dust Bag

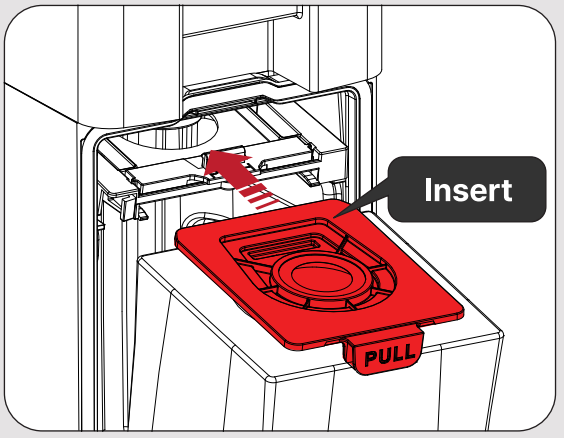

5 It is fixed when it sounds 'Click'

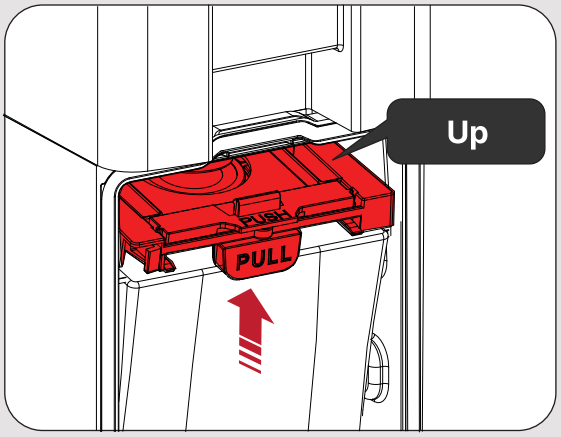

6 Close the Dust Bag door

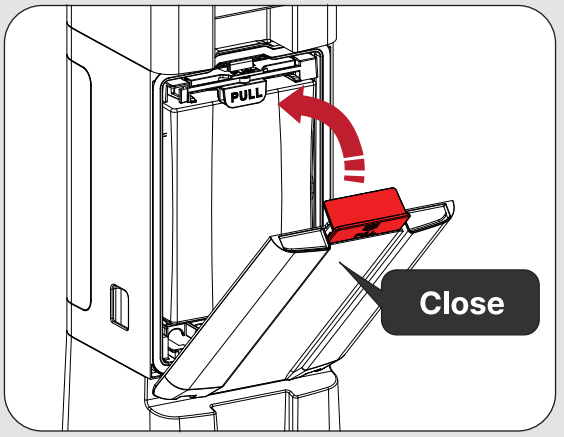

Filter & Gate

Motor Protect Filter & Exaust Filter

1 Pull out Motor Protect Filter

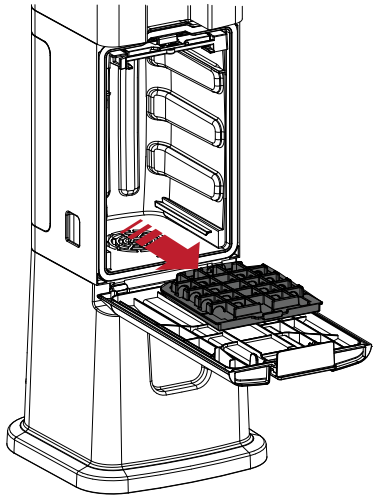

2 Pull out Exaust Filter

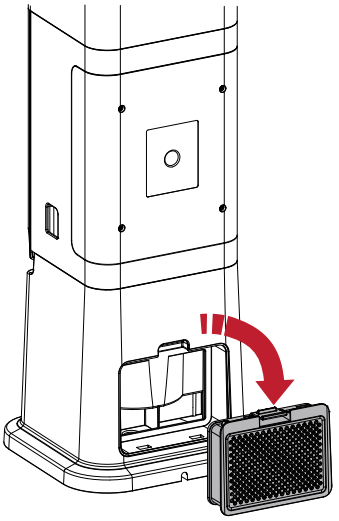

3 Brush the dust off
(NOT washable)



Dust Gate

To maintain the dust gate in best conditon, open the gate and dust off regualry

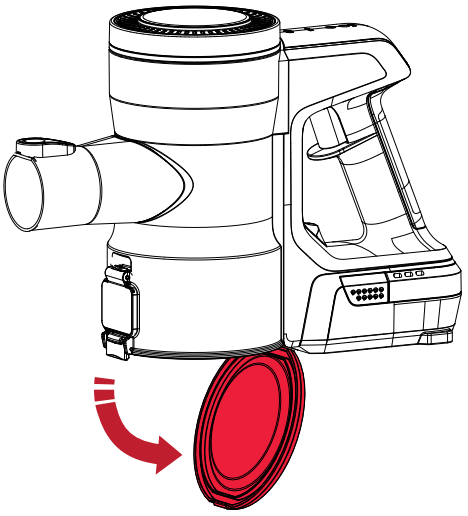

1 Open the gate

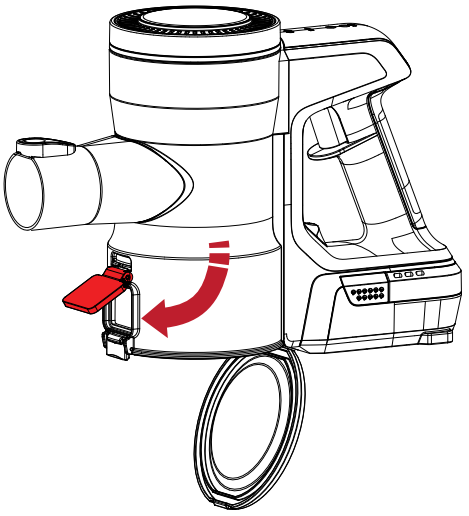

2 Dust off the gate

Maintenance

Safety Instruction

READ ALL INSTRUCTIONS BEFORE USING YOUR VACUUM.
When using an electrical appliance, basic precautions should be observed, including the following:

TO REDUCE THE RISK OF FIRE, ELECTRIC SHOCK OR INJURY:

» Keep hair, loose clothing, fingers, and all parts of body away from openings and moving parts. Brush Roll continues to rotate when in use.
» Brush Roll continues to turn while product is turned ON and handle is in use. To avoid damage to carpet, rugs, furniture and flooring, avoid tipping cleaner or setting it on furniture, fringed area rugs, or carpeted stairs during tool use.
» Do not expose to rain. Store indoors.
» Do not use on wet surfaces.
» Do not allow to be used as a toy.
» Close attention is necessary when used by or near children.
» Children should be supervised to ensure that they do not play with the appliance.
» Plastic film can be dangerous. To avoid danger of suffocation, keep away from children.
» Do not immerse in water or liquid.
» Do not use for any purpose other than described in this user guide.
» Use only manufacturer's recommended attachments.
» If appliance is not working as it should, has been dropped, damaged, left outdoors, or dropped into water, have it repaired at an authorized service center.
» Do not charge the unit outdoors.
» Do not incinerate the appliance even if it severely damaged. The batteries can explode in a fire.
» Do not put any object into opening.
» Do not use with any opening blocked.
» Keep openings free of dust, lint, hair and anything that may reduce airflow.
» Use extra care when cleaning stairs.
» Do not pick up flammable materials (lighter fluid, gasoline, kerosene, etc.) or use in the presence of explosive liquids or vapors.
» Always turn OFF this appliance before connecting or disconnecting the motorized nozzle.
» Do not pick up toxic material (chlorine bleach, ammonia, drain cleaner, etc.).
» Do not use vacuum cleaner in an enclosed space filled with vapors given off by oil-based paint, paint thinner, some moth-proofing substances, flammable dust, or other explosive or toxic vapors.
» Do not pick up hard or sharp objects such as glass, nails, screws, coins, etc.
» Do not pick up anything that is burning or smoking, such as cigarettes, matches or hot ashes.
» Do not use without Dirt Tank or filters in place.
» Use only on dry, indoor surfaces.
» Keep appliance on a level surface.
» Disconnect battery pack before cleaning or servicing.
» If the charger supply cord is damaged, it must be replaced by the manufacturer, its service agent or similarly qualified person in order to avoid a hazard.
» Do not pull or carry charger by cord,use cord as a handle,close door on cord, or pull cord around sharp edges or corners.
» Keep charger cord away from heated surfaces.
» To unplug, grasp the charger plug, not the cord.
» Do not handle charger plug or appliance with wet hands.
» Battery pack, charging port on the hand vac and charger output are not to be short-circuited.
» The appliance must be disconnected from the battery charger when removing the battery.
» The battery is to be disposed of safely.
» Do not recharge, disassemble, heat above 60°C/140°F, or incinerate.
» Keep batteries out of reach of children.
» Dispose of used batteries promptly.
» This appliance contains batteries that are only replaceable by skilled persons.
» Prevent unintentional starting. Ensure the switch is in the OFF position
before picking up or carrying the appliance. Carrying the appliance with your finger on the switch or energizing appliance that have the switch on invites accidents.
» Under abusive conditions, liquid may be ejected from the battery; avoid contact. If contact accidentally occurs, flush with water. If liquid contacts eyes, additionally seek medical help. Liquid ejected from the battery may cause irritation or burns.
» Do not use appliance that is damaged or modified. Damaged or modified batteries may exhibit unpredictable behavior resulting in fire, explosion or risk of injury.
» Do not expose appliance to fire or excessive temperature. Exposure to fire or temperature above 130°C/ 266°F may cause explosion.
» Follow all charging instructions and do not charge the appliance outside of the temperature range specified in the instructions. Charging improperly or at temperatures outside of the specified range may damage the battery and increase the risk of fire.
» Have servicing performed by a qualified repair person using only identical replacement parts. This will ensure that the safety of the product is maintained.
» Do not modify or attempt to repair the appliance except as indicated in the instructions for use and care.
» Keep the temperature range of between 4-40°C/40-104°F when charging battery, storing unit or during use.
» Recharge only with the charger specified by the manufacturer. A charger that is suitable for one type of battery pack may create a risk of fire when used with another battery pack.
» Unplug charger from electrical socket when not in use, before cleaning, maintaining or servicing the appliance, and if your appliance has an accessory tool with a moving brush, before connecting or disconnecting the tool.
» This appliance contains batteries that are non-replaceable.
» The battery must be removed from the appliance before it is scrapped.
» Do not use with damaged cord or charger. If appliance is not working as it should, has been dropped, damaged, left outdoors, or dropped into water, return it to a service center.
» Turn OFF all controls before unplugging.

Check List Before for A/S

Save time and money by checking the following before calling for service.

Problem	Possible Cause & Solution
Does not operate.	· The power plug is not connected. Please connect the power plug. · The vacuum cleaner is not plugged in properly. · Please take the vacuum cleaner and plug it back in.
Strange odor	· The first three months of your purchase may smell like a new product. · If you use the dust bag for more than 3 months, it smells. Please replace the bag. · If you clean your pet's fur, it may smell. Please replace the dust bag. · If cleaned dry the vacuum thoroughly before using.
Does not charge	· There is a foreign object on the charging terminal. · Wipe off foreign substances from the charging terminal. · The vacuum cleaner is not plugged in properly. · Please take the vacuum cleaner and plug it back in.

Specifications

List	Description
Model	Tower
Product	Auto empty charging tower
Rated voltage	AC 120V ~ 60 Hz
Adapter output	26.5V, 500mA
Rated power	1400W
Home Page	www.mcappliance.com
Customer Support	888-775-0202
Country of origin	Made in China

FCC notice

This equipment has been tested and found to comply with the limits for a Class B digital device, pursuant to part 15 of the FCC Rules.
These limits are designed to provide reasonable protection against harmful interference in a residential installation.
This equipment generates, uses and can radiate radio frequency energy and, if not installed and used in accordance with the instructions, may cause harmful interference to radio communications.
However, there is no guarantee that interference will not occur in a particular installation.
If this equipment does cause harmful interference to radio or television reception, which can be determined by turning the equipment off and on, the user is encouraged to try to correct the interference by one or more of the following measures:
— Reorient or relocate the receiving antenna.
— Increase the separation between the equipment and receiver.
— Connect the equipment into an outlet on a circuit different from that to which the receiver is connected.
— Consult the dealer or an experienced radio/TV technician for help.

Supplier's Declaration of Conformity

47 CFR § 2.1077 Compliance Information

Model : MCVTOWER

U.S. Contact Information :

Company Name: Baihetian Innovative Solutions
Street Address: 6837 Chase Rd
City/Province/Zip: Dearborn, MI 48126
Telephone No: 313-395-3113
Email: ken.young@baihetiansolutions.com

FCC Compliance Statement

This device complies with Part 15 of the FCC Rules.
Operation is subject to the following two conditions:
(1) This device may not cause harmful interference, and
(2) this device must accept any interference received, including interference that may cause undesired operation.

LIMITED WARRANTY

MC Appliance Corporation warrants each new Tower to be free from defects in material and workmanship, and agrees to remedy any such defect or to furnish a new part(s), at the company's option, for any part(s) of the unit that has failed during the warranty period. Parts and labor expenses are covered on this unit for a period of one year from the date of purchase. A copy of the dated sales receipt/invoice is required to receive warranty service, replacement or refund.

This warranty covers appliances in use within the contiguous United States, Alaska, Hawaii and Puerto Rico. This warranty does not cover the following:

- Damages due to shipping damage or improper installation.
- Damages due to misuse or abuse.
- Content losses due to failure of the unit.
- Repairs performed by unauthorized service agents.
- Service calls that do not involve defects in material and workmanship such as instructions on proper use of the product or improper installation.
- Replacement or resetting of house fuses or circuit breakers.
- Failure of this product if used for other purposes than its intended purpose.
- Disposal costs for any failed unit not returned to our factory.
- Any delivery/installation costs incurred as the result of a unit that fails to perform as specified.
- Expenses for travel and transportation for product service if your appliance is located in a remote area where service by an authorized service technician is not available.
- The removal and reinstallation of your appliance if it is installed in an inaccessible location or is not installed in accordance with published installation instructions.
- Refunds for non repairable products are limited to the price paid for the unit per the sales receipt.
- This warranty is non transferable. This warranty applies only to the original purchaser and does not extend to any subsequent owner(s).

Limitations of Remedies and Exclusions:

Product repair in accordance with the terms herein, is your sole and exclusive remedy under this limited warranty. Any and all implied warranties including merchantability and fitness for a particular purpose are hereby limited to one year or the shortest period allowed by law. MC Appliance Corporation is not liable for incidental or consequential damages and no representative or person is authorized to assume for us any other liability in connection with the sale of this product. Under no circumstances is the consumer permitted to return this unit to the factory without the prior written consent of MC Appliance Corporation.

Some states prohibit the exclusion or limitation of incidental or consequential damages, or limitations on implied warranties. This warranty gives you specific legal rights, and you may also have other rights which vary from state to state.

Model	Parts	Labor	Type of Service
MCVTOWER	One Year	One Year	Carry In

For Service or Assistance please call **888-775-0202** or visit us on the web at **www.mcappliance.com** to request warranty service or order parts.



CNA International, Inc. d/b/a MC appliance Corporation. all rights reserved.
Magic Chef® logo is a registered trademark of CNA International, Inc.