SOLUM

Newton 4-Color (BWRY)

Electronic Shelf Label Datasheet

2026-09-07

Summary

This datasheet presents the general performance and specifications of Newton 4-Color (BWRY) Label for SOLUM Electronic Shelf Label (ESL) System.

SOLUM Solution Provider *© SOLUM. All rights reserved*

The names of actual companies and products mentioned herein may be the trademarks of their respective owners.

No part of this document may be reproduced, stored in a retrieval system, or transmitted in any form or by any means without the express written consent of SOLUM.

This document is subject to change without notice.

THE SPECIFICATIONS AND INFORMATION REGARDING THE PRODUCTS IN THIS MANUAL ARE SUBJECT TO CHANGE WITHOUT NOTICE. ALL STATEMENTS, INFORMATION, AND RECOMMENDATIONS IN THIS MANUAL ARE BELIEVED TO BE ACCURATE BUT ARE PRESENTED WITHOUT WARRANTY OF ANY KIND, EXPRESS OR IMPLIED. USERS MUST TAKE FULL RESPONSIBILITY FOR THEIR APPLICATION OF ANY PRODUCTS.

THE SOFTWARE LICENSE AND LIMITED WARRANTY FOR THE ACCOMPANYING PRODUCT ARE SET FORTH IN THE INFORMATION PACKET THAT SHIPPED WITH THE PRODUCT AND ARE INCORPORATED HEREIN BY THIS REFERENCE. IF YOU ARE UNABLE TO LOCATE THE SOFTWARE LICENSE OR LIMITED WARRANTY, CONTACT YOUR SOLUM REPRESENTATIVE FOR A COPY.

NOTWITHSTANDING ANY OTHER WARRANTY HEREIN, ALL DOCUMENT FILES AND SOFTWARE OF THESE SUPPLIERS ARE PROVIDED “AS IS" WITH ALL FAULTS. SOLUM AND THE ABOVE-NAMED SUPPLIERS DISCLAIM ALL WARRANTIES, EXPRESSED OR IMPLIED, INCLUDING, WITHOUT LIMITATION, THOSE OF MERCHANTABILITY, FITNESS FOR A PARTICULAR PURPOSE AND NONINFRINGEMENT OR ARISING FROM A COURSE OF DEALING, USAGE, OR TRADE PRACTICE.

IN NO EVENT SHALL SOLUM OR ITS SUPPLIERS BE LIABLE FOR ANY INDIRECT, SPECIAL, CONSEQUENTIAL, OR INCIDENTAL DAMAGES, INCLUDING, WITHOUT LIMITATION, LOST PROFITS OR LOSS OR DAMAGE TO DATA ARISING OUT OF THE USE OR INABILITY TO USE THIS MANUAL, EVEN IF SOLUM OR ITS SUPPLIERS HAVE BEEN ADVISED OF THE POSSIBILITY OF SUCH DAMAGES

Any Internet Protocol (IP) addresses and phone numbers used in this document are not intended to be actual addresses and phone numbers. Any examples, command display output, network topology diagrams, and other figures included in the document are shown for illustrative purposes only. Any use of actual IP addresses or phone numbers in illustrative content is unintentional and coincidental.

SOLUM and the SOLUM logo are trademarks or registered trademarks of SOLUM and/or its affiliates in KOREA and other countries. Third-party trademarks mentioned are the property of their respective owners. The use of the word partner does not imply a partnership relationship between SOLUM and any other company.

©2016-2026 SOLUM Co. Ltd, Inc. All rights reserved.

Table of Contents

1. Preface 7

1.1. About This Guide 7

1.2. Audience 7

1.3. Abbreviations and Acronyms 7

2. Overview 8

3. Specification 9

3.1. Product Specification 9

3.2. Radio (RF) Specification 12

3.3. NFC Specification 12

3.4. Features 13

3.5. Mechanical Drawing 14

3.5.1. 1.6″ 14

3.5.2. 2.2″ 14

3.5.3. 2.7″ 16

3.5.4. 2.9″ 16

3.5.5. 4.2″ 17

3.5.6. 6.0″ 17

3.5.1. 7.5″ 18

3.6. Label Marking 19

3.7. Initial Display Image 21

3.8. Certifications 21

3.8.1. FCC 22

3.8.2. ISED 22

3.8.3. CE 23

3.8.4. KC 24

4. Packaging 25

5. Reliability Test 26

6. Product Handling Precautions 28

6.1. Usage Environment 28

6.2. Storage and Use 28

6.3. Product Cleaning 29

6.3.1. For Spray Cleaning: 29

6.3.2. For Wet Tissue Cleaning: 30

Document History

Rev.	Date	Revision History	Page
v1.0.0	2026-09-07	Release - separated from Newton_Datasheet_v2.0.1	-

1. Preface

1.1. About This Guide

This datasheet presents the specifications and general performance of SOLUM's Newton 4-Color (BWRY) Electronic Shelf Labels (ESLs) lineup.

1.2. Audience

This manual is intended for any user (IT, operations, store managers, installers, etc.) authorized to operate and install SOLUM ESLs.

1.3. Abbreviations and Acronyms

Terminology/Abbreviation	Description
GW	Gateway
ESL	Electronic Shelf Label
RF	Radio Frequency
IT	Information Technology
PoE	Power over Ethernet
TBD	To Be Decided

2. Overview

SOLUM Newton 4-Color (BWRY) Electronic Shelf Labels (ESLs) are components of a total SOLUM ESL System. The SOLUM ESL System consists of the ESLs, Gateway(s), and Server and are used to electronically display key information, such as price and product information, that is traditionally printed or written on paper in environments like supermarkets, warehouses, and factories. Offered at an exceptionally competitive price, Newton 4-Color (BWRY) ESLs encompass essential features while incorporating a range of core functionalities that meet modern demands.

SOLUM's Newton 4-Color (BWRY) Electronic Shelf Labels (ESLs) are the industry-leading solutions that provide the longest battery life, fastest update speed, built-in LEDs, multiple pages per ESL, and more to take the operation beyond just displaying information on the ESLs.

Newton 4-Color (BWRY) Electronic Shelf Labels (ESLs) come in various useful and colors to meet all customer use cases.

3. Specification

This section details the specifications of each ESL by size. ESLs are identified by the diagonal measurement of the display in inches. For example, a 2.9″ ESL refers to an ESL with the diagonal display dimension of 2.9″.

3.1. Product Specification

Item	Description	
Label Dimensions (W x H x D)	1.6″	36.7 x 45.0 x 13.1 mm / 1.44 x 1.77 x 0.52 in
	2.2″	67.1 x 37.4 x 13.1 mm / 2.64 x 1.47 x 0.52 in
	2.7″	76.0 x 49.5 x 13.1 mm / 2.99 x 1.95 x 0.52 in
	2.9″	86.0 x 41.3 x 13.1 mm / 3.39 x 1.63 x 0.52 in
	4.2″	98.1 x 83.8 x 14.5 mm / 3.86 x 3.29 x 0.57 in
	6.0″	133.0 x 109.0 x 14.7 mm / 5.24 x 4.29 x 0.58 in
	7.5″	125.0 x 183.0 x 15.2 mm / 4.92 x 7.20 x 0.60 in
Display Dimensions (W x H)	1.6″	27.0 x 27.0 mm / 1.06 x 1.06 in
	2.2″	48.1 x 26.0 mm / 1.89 x 1.02 in
	2.7″	57.1 x 38.0 mm / 2.25 x 1.50 in
	2.9″	67.6 x 29.6 mm / 2.66 x 1.17 in
	4.2″	84.8 x 63.6 mm / 3.34 x 2.50 in
	6.0″	114.5 x 85.4 mm / 4.51 x 3.36 in
	7.5″	97.5 x 162.8 mm / 3.84 x 6.41 in
Display Resolution	1.6″	200 x 200 pixels (188 dpi)

	2.2″	296 x 160 pixels (156 dpi)
	2.7″	300 x 200 pixels (133 dpi)
	2.9″	384 x 168 pixels (144 dpi)
	4.2″	400 x 300 pixels (120 dpi)
	6.0″	600 x 448 pixels (132 dpi)
	7.5″	480 x 800 pixels (126 dpi)
Label Weight	1.6″	20.8 g / 0.7 oz
	2.2″	33.2 g / 1.2 oz
	2.7″	40.6 g / 1.4 oz
	2.9″	43.4 g / 1.5 oz
	4.2″	83.0 g / 2.9 oz
	6.0″	166.0 g / 5.9 oz
	7.5″	239.0 g / 8.4 oz
Viewing Angle	Nearly 180°	
Display Colors	●○●● BWRY (Black, White, Red, Yellow)	
Battery	1.6″	Coin Battery (CR2450) x 1
	2.2″	Coin Battery (CR2450) x 2
	2.7″	Coin Battery (CR2450) x 2
	2.9″	Coin Battery (CR2450) x 2
	4.2″	Coin Battery (CR2450) x 2
	6.0″	Coin Battery (CR2450) x 4

	7.5″	Coin Battery (CR2450) x 4
Wireless Communication	2.4 GHz Unlicensed ISM band for BLE physical layer with SOLUM Proprietary Protocol	
Communication Distance	98 feet (30m) radius Line of Sight	
Security	128-bit AES Encryption	
Compliance	FCC, ISED, CE, UKCA, MIC, KC, RoHS, WEEE	
Operating Temperature	0℃ ~ 40℃ (32℉ ~ 104℉) @45~70% RH	
Storage Temperature	0℃ ~ 40℃ (32℉ ~ 104℉) @45~70% RH	

3.2. Radio (RF) Specification

Item	Parameter	Specification			Unit	Condition
		Min	Typ	Max		
Tx	Tx Power	-	4	-	dBm	
	[Carrier Frequency Offset and Drift]	-75	0	75	kHz	
	Tx Current	-	-	8	mA	Total current at max Tx Power
Rx	Receiver Sensitivity	-85	-	-	dBm	PER < 5%

3.3. NFC Specification

Item	Parameter	Specification			Unit	Condition
		Min	Typ	Max		
NFC	Read Distance	-	0.8	-	in	
		-	20	-	mm	

The NFC antenna location is shown for each ESL size.

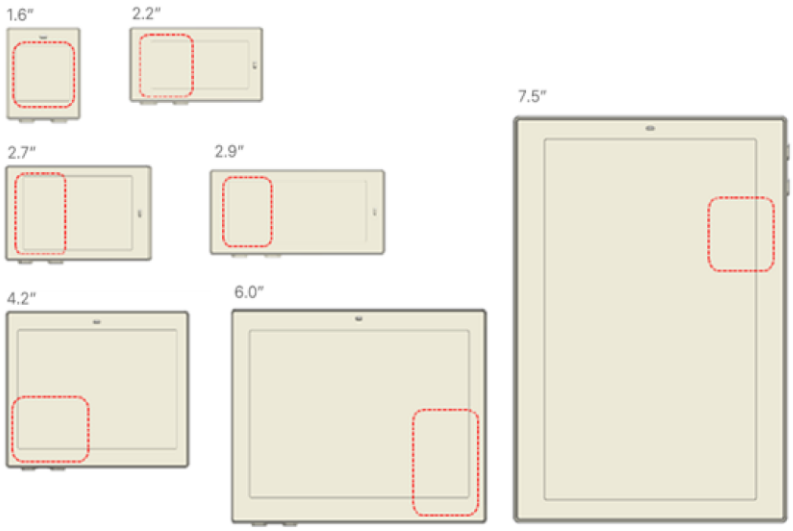

Figure 1. NFC LOCATION

3.4. Features

Some of the features of SOLUM ESL.

- Low power consumption
- Real-time update speed
- SOLUM Proprietary Protocol communication with SOLUM Gateway for added security

Item	Description	
Functional Buttons	2 Buttons (page turn, turn off LED, out of stock, picking, alarm)	
LED	7 colors (Red, Green, Blue, Yellow, Cyan, Magenta, White)	
Usable Pages	1.6″	7 pages
	2.2″	7 pages
	2.7″	7 pages
	2.9″	7 pages
	4.2″	7 pages
	6.0″	3 pages
	7.5″	3 pages
NFC	Built-in Felica NFC Forum Type 3	
IP Rating	IP67	
Housing Bezel Color	Black, White	

3.5. Mechanical Drawing

3.5.1. 1.6”

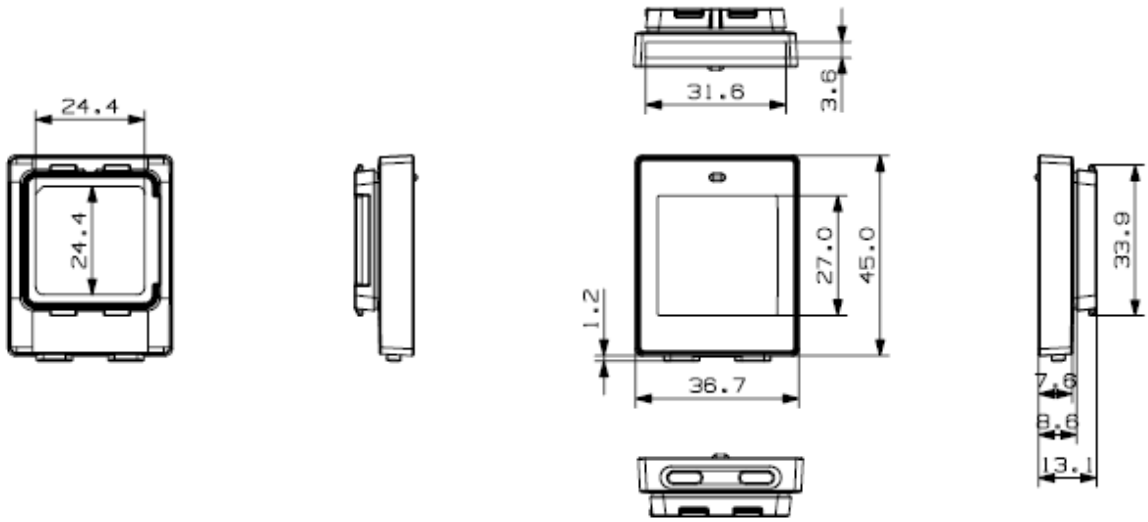

(Unit: mm)

Figure 2. 1.6” MECHANICAL DIMENSION

3.5.2. 2.2”

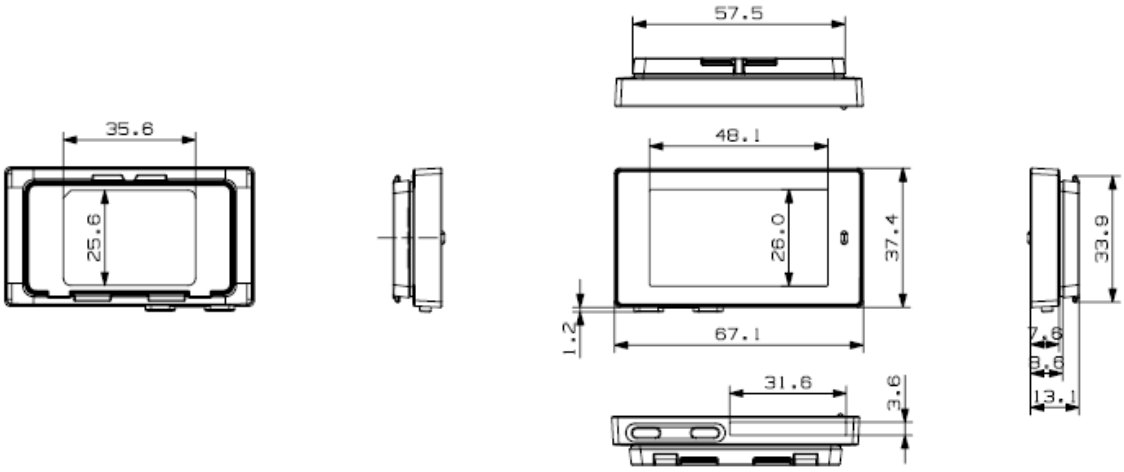

(Unit: mm)

Figure 3. 2.2” MECHANICAL DIMENSION

3.5.3. 2.7”

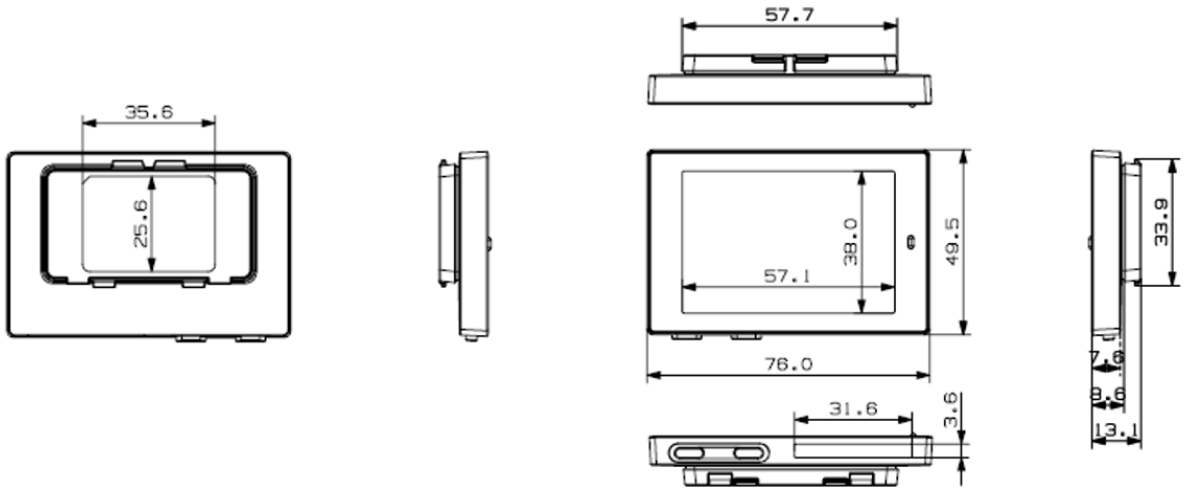

(Unit: mm)

Figure 4. 2.7” MECHANICAL DIMENSION

3.5.4. 2.9”

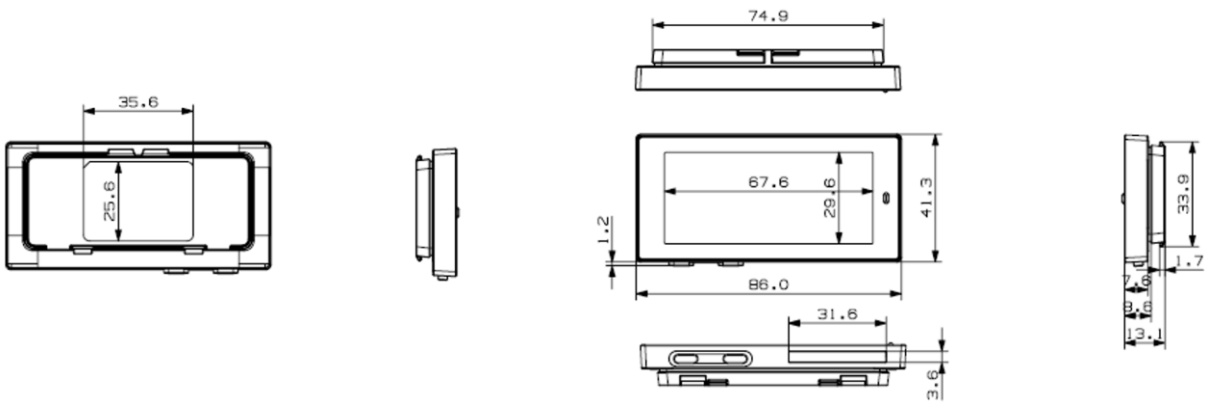

(Unit: mm)

Figure 5. 2.9” MECHANICAL DIMENSION

3.5.5. 4.2”

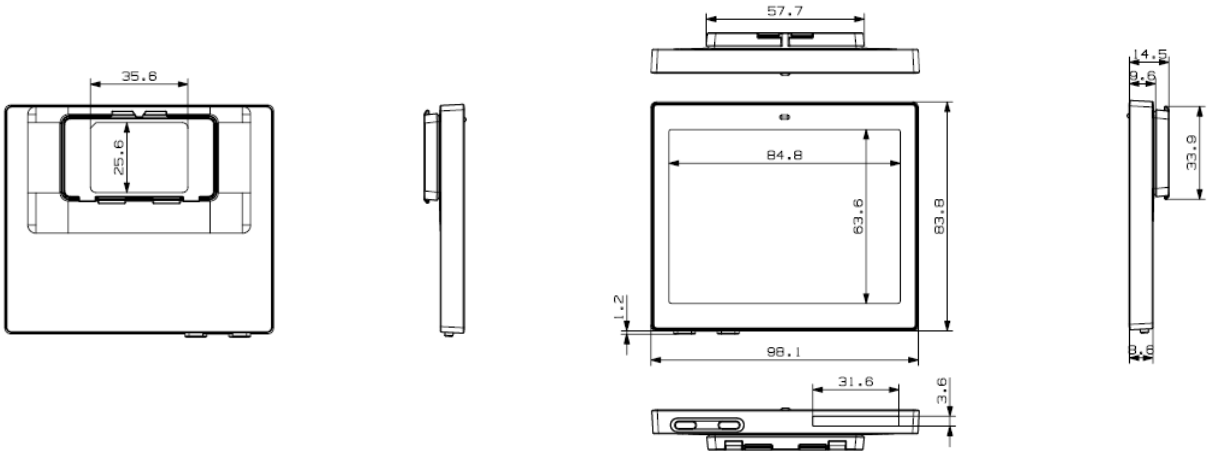

(Unit: mm)

Figure 6. 4.2” MECHANICAL DIMENSION

3.5.6. 6.0”

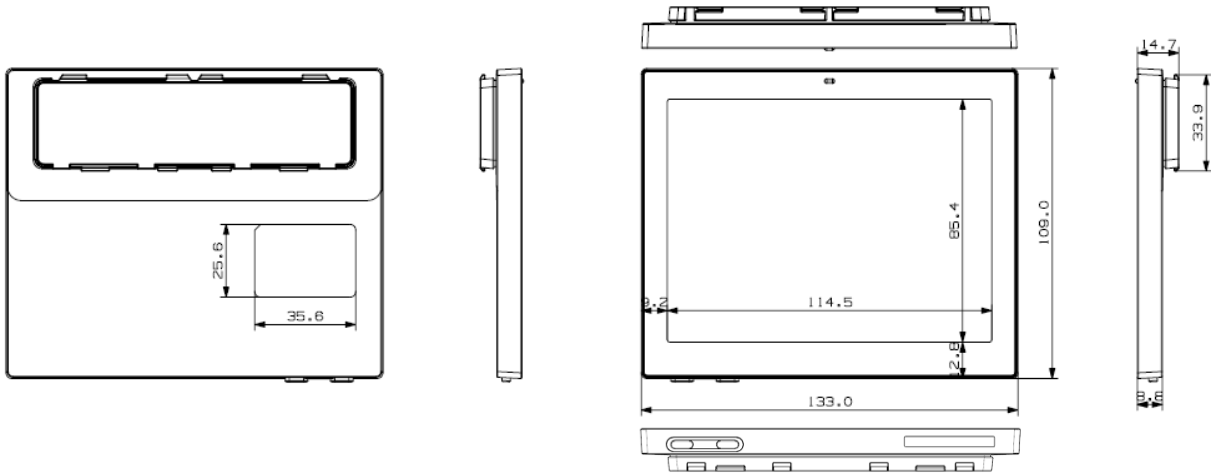

(Unit: mm)

Figure 7. 6.0” MECHANICAL DIMENSION

3.5.1. 7.5”

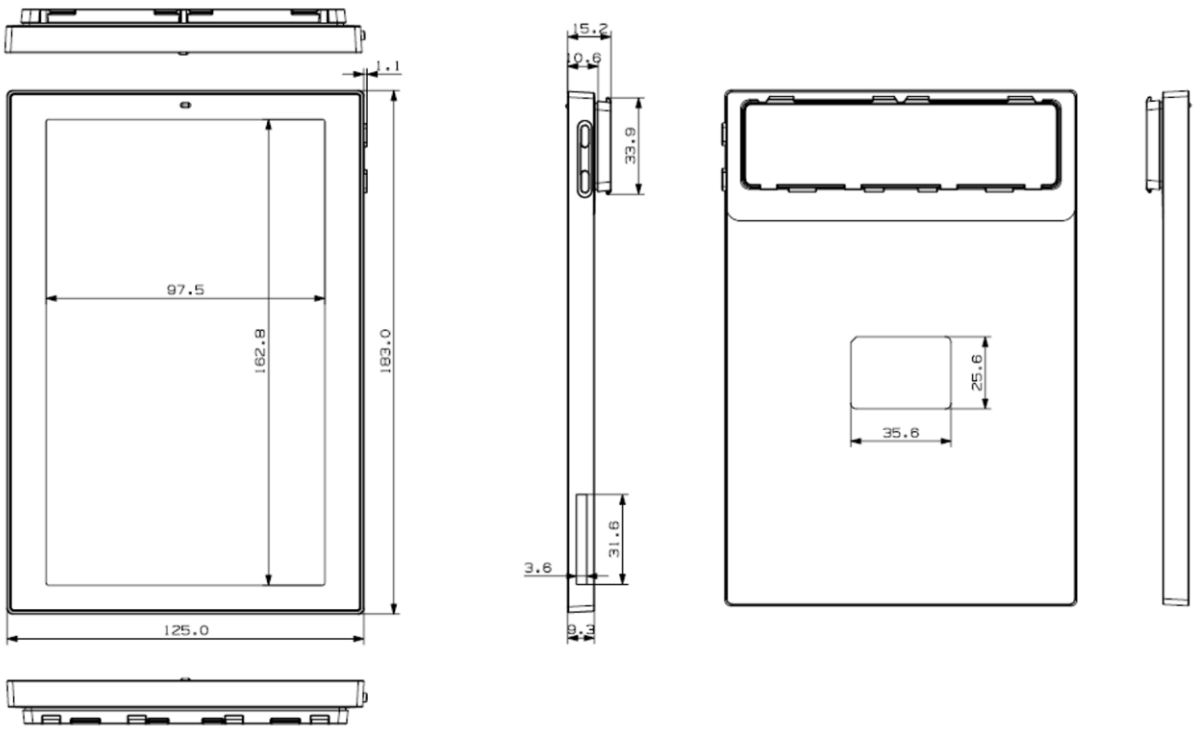

(Unit: mm)

Figure 8. 7.5” MECHANICAL DIMENSION

3.6. Label Marking

Figure 9. ESL LABELS (PRODUCT)

ESL-specific information can be found on the sticker label or laser marking located on the back of the ESL. Information displayed includes, but is not limited to: Model, Certifications, Manufacturing Information, ESL Media Access Control (MAC) Address.

- Model: EL①②③④3⑤4A (i.e. EL027H3B4A)
  - ①②③: ESL Display Size
    - ✓ 016= 1.6″
    - ✓ 022= 2.2″
    - ✓ 027= 2.7″
    - ✓ 042= 4.2″
    - ✓ 060= 6.0″
  - ④: Main IC Maker
    - ✓ F= Silabs
    - ✓ H= Nordic
  - ⑤: Housing Color
    - ✓ B= Black

✓ W= White

Size	Model Name			
	Silabs		Nordic	
	Black	White	Black	White
1.6″	EL016F3B4A	EL016F3W4A	-	-
2.2″	EL022F3B4A	EL022F3W4A	-	-
2.7″	-	-	EL027H3B4A	-
2.9″	EL029F3B4A	EL029F3W4A		
4.2″	EL042F3B4A	EL042F3W4A	-	-
6.0″		-	EL060H3B4A	EL060H3W4A
7.5″	-	-	EL075H3B4A	EL075H3W4A

- MFD (Manufacturing Date): [MON.DD.YYYY]
- S/N: Serial Number Information

MAC Label stickers can be found in multiple areas of the ESL. They are to be scanned for operation. If the ESL is not assigned to a product, the MAC barcode and 12-digit code will be shown on the display. Dimensions can be found in the image below.

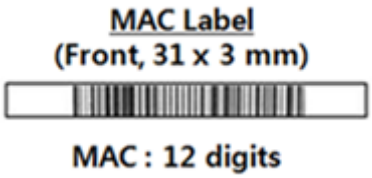

Figure 10. ESL LABELS (MAC)

3.7. Initial Display Image

ESL-specific information can be found in the initial display image of the ESL. The information displayed is not limited to: Model, ESL Media Access Control (MAC) Address.

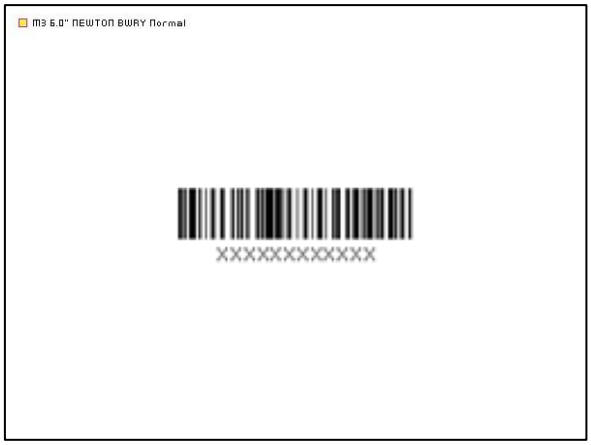

Figure 11. ESL INITIAL DISPLAY IMAGE

3.8. Certifications

Each ESL has the following certifications and should be noted for your region.

Size	Model	FCC	ISED	CE*	KC	MIC	UKCA	RoHS	WEEE
1.6″	EL016F3W4A	O	O	O	O	O	O	O	O
2.2″	EL022F3W4A	O	O	O	O	O	O	O	O
2.7″	EL027H3B4A	O	O	O	O	O	O	O	O
2.9″	EL029F3W4A	O	O	O	O	O	O	O	O
4.2″	EL042F3W4A	O	O	O	O	O	O	O	O
6.0″	EL060H3W4A	O	O	O	O	O	O	O	O
7.5″	EL075H3W4A	O	O	O	O	O	O	O	O

- Food contact test passed
- This product has passed the IP67 test and does not allow water penetration when immersed at a depth of approximately 1 m (3.2 ft) for 30 minutes. SOLUM shall not be liable for any flooding resulting from conditions that do not comply with the IP67 rating.
- IEC 62471 standard (Photobiological Safety of Lamps and Lamp Systems) compliant

*CE: RF/EMC/LVD/RoHS2

3.8.1. FCC

This equipment has been tested and found to comply with the limits for a Class A digital device, pursuant to part 15 of the FCC Rules. These limits are designed to provide reasonable protection against harmful interference when the equipment is operated in a commercial environment. This equipment generates, uses, and can radiate radio frequency energy and, if not installed and used in accordance with the instruction manual, may cause harmful interference to radio communications. Operation of this equipment in a residential area is likely to cause harmful interference in which case the user will be required to correct the interference at his own expense.

Caution

THE GRANTEE IS NOT RESPONSIBLE FOR ANY CHANGES OR MODIFICATIONS NOT EXPRESSLY APPROVED BY THE PARTY RESPONSIBLE FOR COMPLIANCE.

SUCH MODIFICATIONS COULD VOID THE USER'S AUTHORITY TO OPERATE THE EQUIPMENT.

IMPORTANT NOTE : FCC RF Radiation Exposure Statement

This equipment complies with FCC RF radiation exposure limits set forth for an uncontrolled environment.

This equipment should be installed and operated with a minimum distance of 20 centimeters between the radiator and your body. This transmitter must not be co-located or operating in conjunction with any other antenna or transmitter.

This device complies with part 15 of the FCC Rules. Operation is subject to the following two conditions:

(1) This device may not cause harmful interference, and (2) this device must accept any interference received, including interference that may cause undesired operation of the device.

3.8.2. ISED

Le présent appareil est conforme aux CNR d'Industrie Canada applicables aux appareils radio

exempts de licence. L'exploitation est autorisée aux deux conditions suivantes :(1) l'appareil ne doit pas produire de brouillage, et (2) l'utilisateur de l'appareil doit accepter tout brouillage radioélectrique subi, meme si le brouillage est susceptible d'en compromettre le fonctionnement.

Attention: Tout changement ou modification non expressément approuvé par le fabricant peut annuler le droit de l'utilisateur à utiliser l'équipement.

exposition aux rayonnements radiofréquences. Pour se conformer aux exigences de conformité de l'exposition IC RF, une distance de séparation d'au moins 20 cm doit être maintenue entre l'antenne de cet appareil et toutes les personnes.

This device complies with Industry Canada NRCs applicable to licence-exempt radio devices. The operation is authorized under the following two conditions: (1) the device shall not cause interference, and (2) the user of the device shall accept any radio interference suffered, even if the interference is likely to compromise its operation.

Caution: Any change or modification not expressly approved by the manufacturer may void the user's right to use the equipment.

exposure to radiofrequency radiation. To comply with the ICRF exposure compliance requirements, a separation distance of at least 20 cm must be maintained between the antenna of this device and all persons.

-PMN(Product Marking Name) : Newton S-Label

-FVIN(Firmware Version Identity Number) : 1.1

3.8.3. CE

Model Name: ESL Label

Manufacturer: SOLUM CO., LTD.

Address: 2354, Yonggu-daero, Giheung-gu, Yongin-si, Gyeonggi-do, Republic of Korea

Contact: www.solum-group.com / +82-1588-0502

Electrical Ratings: Input: DC 2.4 V - DC 3.6 V

EU Representative: SOLUM Europe GmbH / Frankfurter Str. 10-14, 65760 Eschborn Germany

3.8.4. KC

상호: 주식회사 솔루엠

기자재명칭: 특정소출력 무선기기(무선데이터통신시스템용 무선기기)

제조자/제조국가: 주식회사 솔루엠 / 한국, 베트남

기본모델명	등록연월일
EL016F3WRA	2023-03-03
EL022F3WRA	2022-12-14
EL027H3B4A	TBD
EL029F3WRA	2022-12-14
EL042F3WRA	2023-07-19
EL060H3WRA	2020-03-12
ELH75H3WRA	2020-03-12

4. Packaging

Size	Carton Information				Pallet Information				
	Tags / Carton	Dimension_Outer (mm)			Cartons / Layer	Number of Layer	Cartons / Pallet	Tags / Pallet	Height (mm)
		W	L	H					
1.6″	480	422.0	324.0	219.0	8	4	32	15,360	1,016
2.2″	240	350.0	324.0	201.0	9	5	45	10,800	1,145
2.7″	240	386.0	330.4	234.0	9	4	36	8,640	1,076
2.9″	240	426.0	324.0	213.0	8	5	40	9,600	1,205
4.2″	120	365.0	297.0	231.0	9	4	36	4,320	1,064
6.0″	60	470.0	299.5	155.0	7	6	42	2,520	1,070
7.5″	40	426.0	309.5	171.0	8	6	48	1,920	1,166

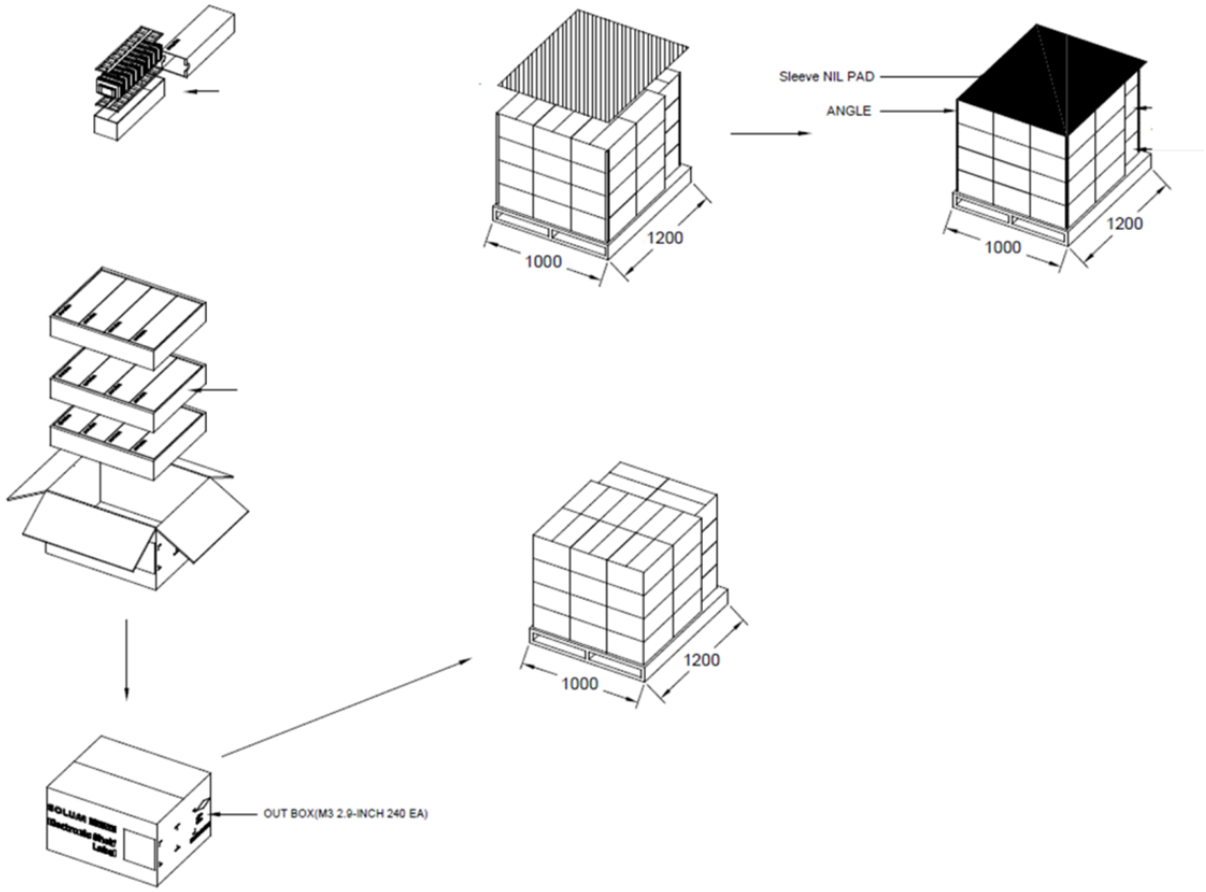

Figure 12. PACKAGING

5. Reliability Test

- High Temperature Operation
- Low Temperature Operation
- High Temperature/Humidity Operation
- High Temperature Storage
- Temperature Shock (Storage)
- ESD
- Package Drop Test
- Package Random Vibration Test

Test Item	Test Condition	Pass Criteria
High Temp Resistance	60℃ / 35% (240hrs)	Normal operation after test
High Temp Operation	40℃ / 35% (240hrs)	
Thermal Shock	-25℃ (for 30mins) ~ 60℃ (for 30mins) for 240 cycles	
High Temp & Humidity Operation	40℃ / 70% (240hrs)	
Low Temp Operation	0℃ (240hrs)	
ESD Test	TYP. Air ±10KV, 150pF, 330Ω, 10 times/Point	
Waterproof (IEC60529)	15cm x 15cm water tank, 1m depth of water, 30 minutes (IP67 criteria)	No water ingress into tag
RF Sensitivity (Communication Distance)	Gateway <-> Tag distance: 100 meters	Tag receives RF signal from Gateway

6. Product Handling Precautions

Provisions should be made to protect against any damage to the product caused by improper handling. The purchaser assumes any responsibility for damage to the product caused by improper handling.

Product should be stored in 0℃ ~ 40℃ (32℉ ~ 104℉) @45~70% RH environment and should be installed within **90 days** of receipt.

6.1. Usage Environment

Take extra caution when using this RF device in the vicinity of other electronic devices and appliances. Most electronic devices and appliances use electromagnetic waves. Electromagnetic waves emitted by this RF device can affect other electronic devices and appliances.

If using the device in an explosion hazard area, follow all safety regulations, instructions, and signals.

6.2. Storage and Use

- The product is shipped in sleep mode (displaying a white screen) and can be activated by pressing the button, using an NFC remote control, or via the mobile app.
- Moisture and liquids can damage internal parts and circuit boards if allowed to enter into the device itself.
- Do not place or store the product on a sloped surface. The product may slide and fall off the surface and become damaged.
- Use the product in temperatures ranges of **0℃ ~ 40℃ / 32℉ ~ 104℉ (BWRY).** Parts and circuits may be damaged if operated or stored in extreme temperature.
- The display panel needs extra care during handling.
    - Do not apply any impacts on the e-Paper display as it is fragile.
    - Continuous exposure to excessive moisture (over 70% RH) or UV shortens display lifetime.
    - Ghosting image may appear in temperature conditions of less than **15℃ / 59℉ for normal tags.** (If ΔL* >2, we call it ghosting phenomenon)

- Avoid areas with strong magnetism or subject to magnetism. Contact between the device and a magnetic object can lead to malfunctions.
- Do not place the product near heat-producing kitchen appliances like a stove or a microwave or in the vicinity of highly pressurized containers.
- External impact to the product, such as from being dropped, can damage the product.
- Twisting and bending the product can damage the exterior casing and the internal components.
- This product uses the 2.4GHz frequency band for the wireless communication network. Radio communications can be limited or affected by other applications that share the same frequency band, such as Wi-Fi, Bluetooth, Zigbee, etc.
- A prior investigation into the radio environment is strongly required for efficient and smooth installation.
- Frequent communications, updates and screen renewals may reduce battery life time.
- Low temperature environments may reduce battery life.
- FIFO (First In First Out)
- Not permitted for installation or use in perfume-intensive environments (e.g., perfume counters or adjacent display sections); strict adherence to usage guidelines is required to prevent quality issues.

6.3. Product Cleaning

6.3.1. For Spray Cleaning:

Steps

(1) Lightly spray all surfaces and wait a few seconds.

(2) Gently wipe clean using a cloth or tissue.

(3) Let the labels dry.

Notes

- Use mild, non-alcoholic detergents or glass cleaner.
- Recommend non-abrasive cloths: Microfiber, Cotton T-shirt, Cotton handkerchief, Cotton tea towel

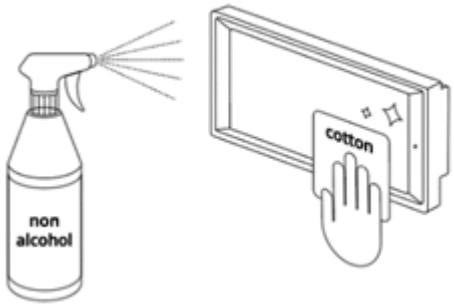

6.3.2. For Wet Tissue Cleaning:

Steps

(1) Stand or lay down the labels.

(2) Wipe using wet tissues.

(3) Let the labels dry.