Form No. 3465-828 Rev A

Actuator Replacement Kit

Z Master® 4000 Series

Model No. 161-3549

Installation Instructions

Installation

Loose Parts

Use the chart below to verify that all parts have been shipped.

Procedure	Description	Qty.	Use
1	No parts required	–	Prepare the machine.
2	No parts required	–	Remove the actuator.
3	Drilling template	1	Drill holes into the frame using the provided template.
4	Actuator Button-head cap screws Locknuts Bracket Actuator pivot pin Clip pin Shoulder screw	1 3 2 1 1 1 1	Install the actuator.
5	No parts required	–	Check the mower deck height of cut and rake.

Note: Determine the left and right sides of the machine from the normal operating position.

1

Preparing the Machine

No Parts Required

Procedure

1. Park the machine on a level surface.
2. Disengage the blade-control switch.
3. Move the motion-control levers outward to the NEUTRAL-LOCK position.
4. Engage the parking brake.
5. Shut off the engine and remove the key.
6. Disconnect the negative battery cable.
7. Support the mower deck using 4x4 blocks of wood.
8. Remove the height-of-cut pin from the height-of-cut bracket (Figure 1).

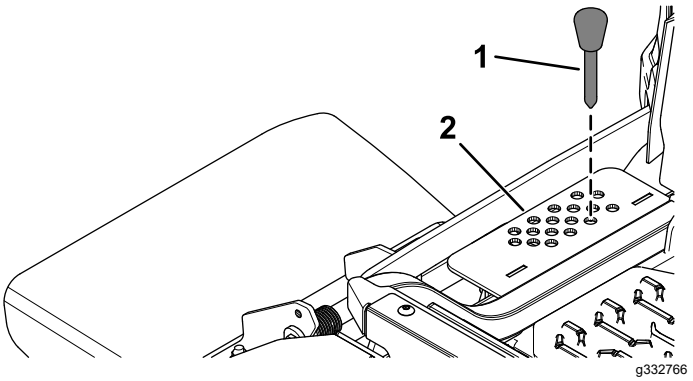

Figure 1

1. Height-of-cut pin
2. Height-of-cut bracket

© 2023—The Toro® Company
8111 Lyndale Avenue South
Bloomington, MN 55420

Register at www.Toro.com.

Original Instructions (EN)
Printed in the USA
All Rights Reserved

3465-828

2

Removing the Actuator

No Parts Required

Procedure

1. Disconnect the actuator connector from the machine.

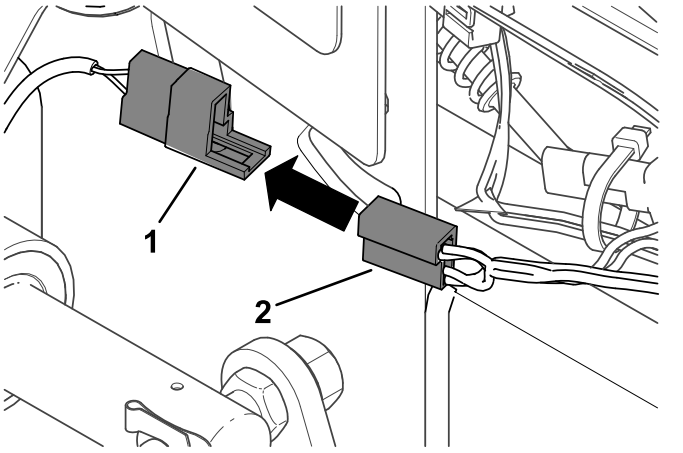

Figure 2

1. Actuator wire harness
2. Electric deck lift wire harness

2. Remove the actuator. Discard parts.

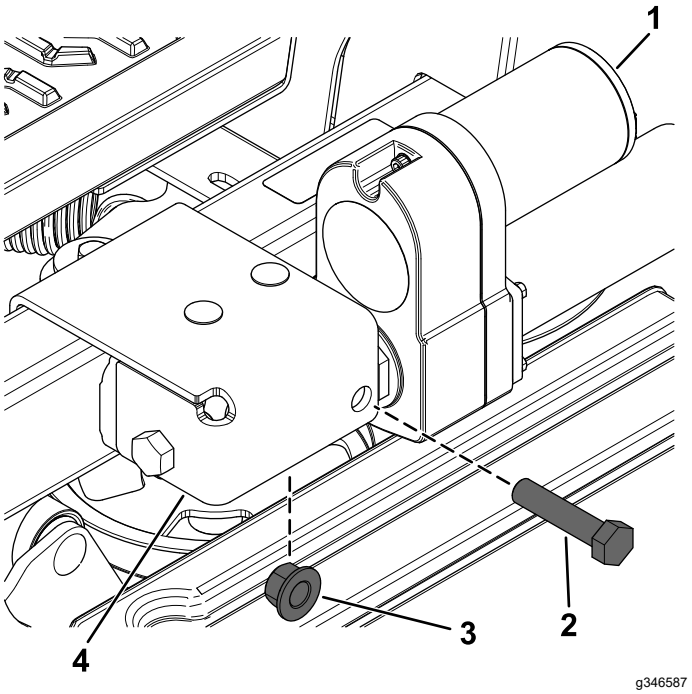

Figure 3

1. Actuator
2. Flange-head bolt (1/2 x 2-1/4 inches)
3. Locknut (1/2 inch)
4. Outer actuator bracket

3

Drilling the Frame

Parts needed for this procedure:

1	Drilling template

Procedure

1. Install the drilling template onto the frame tube. Ensure the template is flush to the spring bracket.

   ⚠ WARNING

   Using a drill without proper eye protection may allow debris to enter the eye, causing injury.

   When drilling, always wear eye protection.

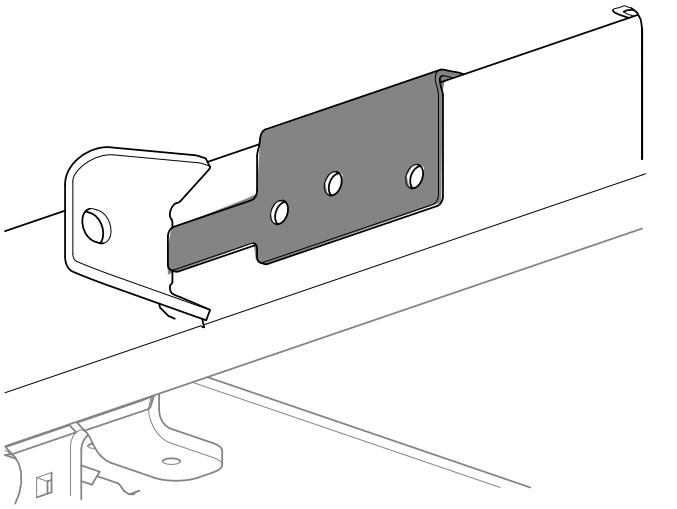

g469032

Figure 4

2. Drill holes into the frame using a Letter X drill bit.

   Important: **Do not drill completely through one side. Drill from one side and then finish drilling from the other side.**

3. Remove the drilling template from the frame tube.

4

Installing the Actuator

Parts needed for this procedure:

1	Actuator
3	Button-head cap screws
2	Locknuts
1	Bracket
1	Actuator pivot pin
1	Clip pin
1	Shoulder screw

Procedure

1. Install the bracket with 3 button-head cap screws and 2 locknuts.

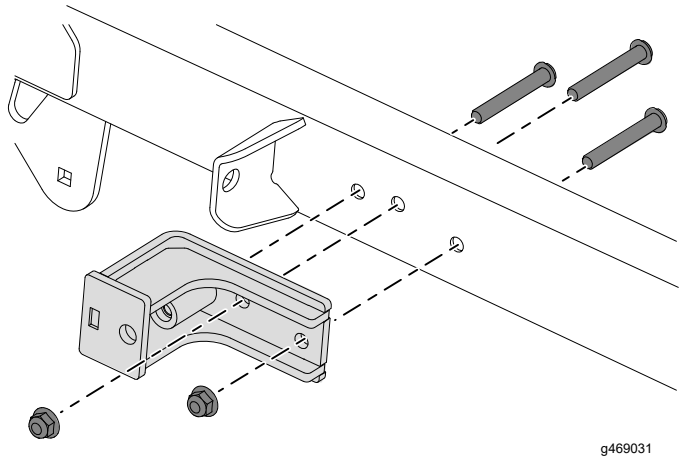

g469031

Figure 5

2. Install the actuator pivot pin.

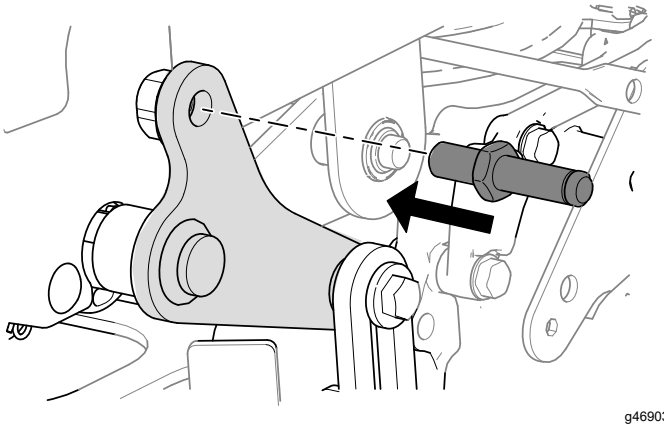

g469030

Figure 6

3. Plug the actuator wire harness into the deck lift wire harness.

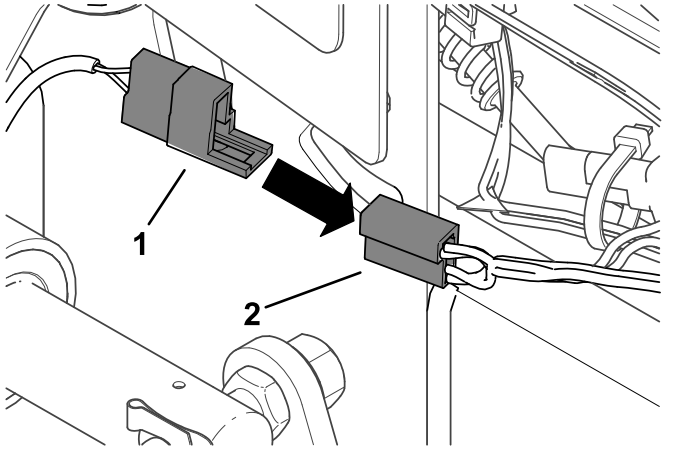

Figure 7

1. Actuator wire harness
2. Electric deck lift wire harness

4. Install the actuator.

   Note: If the actuator does not line up with the pin, power up the actuator and extend or retract as needed.

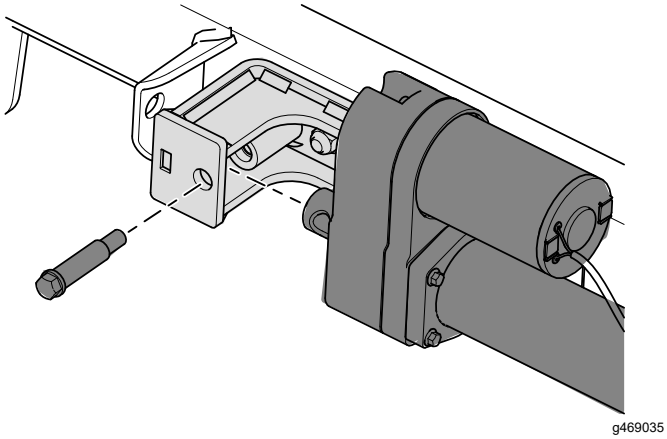

Figure 8

5. Secure the actuator to the rear deck-lift arm using the pin clip.

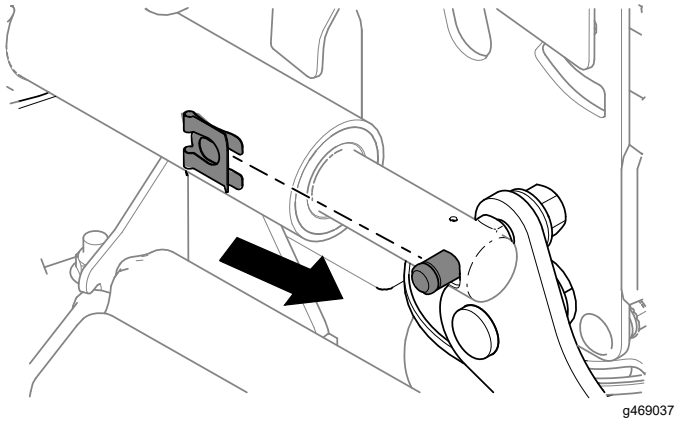

Figure 9

5

Checking the Mower Deck Height of Cut and Rake

No Parts Required

Procedure

Refer to the Adjusting the Side-to-Side Leveling and the Blade Slope procedure in the *Operator's Manual*.

Operation

Machine Transport with Electric Deck Lift

1. Push up on the deck-lift switch until the deck is completely raised.
2. Insert the height-of-cut pin into the 140 mm (5-1/2 inches) height-of-cut position of the bracket.

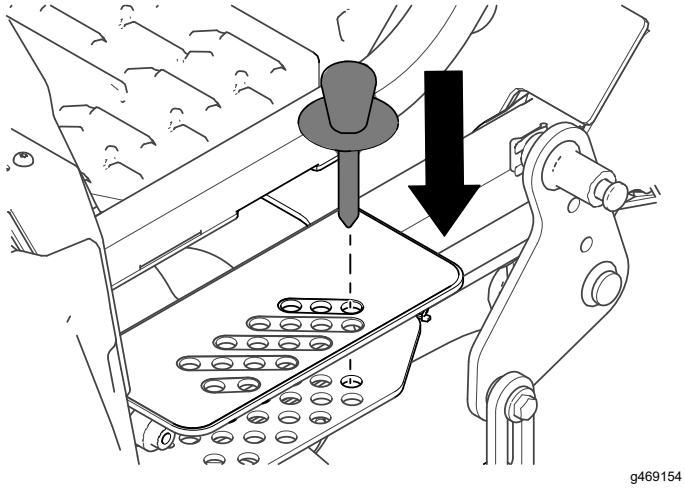

g469154

Figure 10

3. Push down on the deck-lift switch until the height-of-cut linage slightly contacts the height-of-cut pin.

   Important: **Transporting the machine without the deck resting on the height-of-cut pin will cause unnecessary damage to the deck lift actuator.**

Adjusting the Height of Cut

1. Push up on the deck-lift switch.

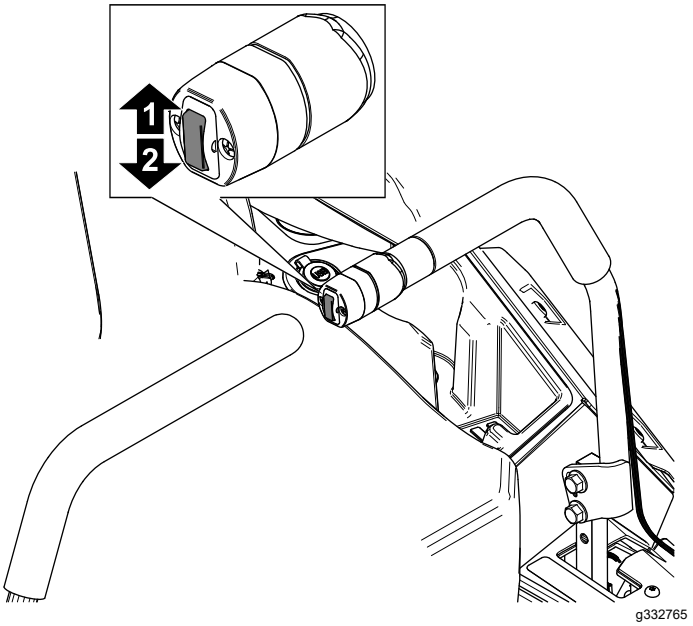

g332765

Figure 11

1. Push up to raise the deck.
2. Push down to lower the deck.

2. Select a hole in the height-of-cut bracket corresponding to the height of cut desired, and insert the pin.
3. Push down on the deck-lift switch until the height-of-cut linkage slightly contacts the height-of-cut pin.

   Note: Too much contact between the height-of-cut linkage and height-of-cut pin can negatively affect the mower deck height of cut and leveling.

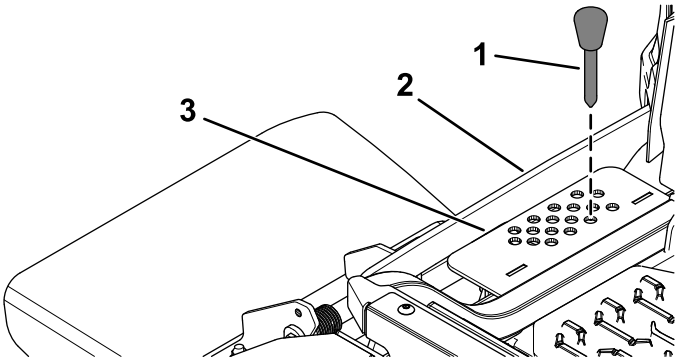

g361935

Figure 12

1. Height-of-cut pin
2. Height-of-cut linkage
3. Height-of-cut bracket

Notes:

Notes:



Count on it.