Bäumr-AG®



LB3 Leaf Blower

User Manual

[Revision 1.0]

READ THIS MANUAL CAREFULLY BEFORE USE – FAILURE TO DO SO MAY RESULT IN INJURY, PROPERTY DAMAGE AND MAY VOID WARRANTY. • KEEP THIS MANUAL FOR FUTURE REFERENCE. • Products covered by this manual may vary in appearance, assembly, inclusions, specifications, description, and packaging.

THE BATTERY MAY HAVE SOME CHARGE ON ARRIVAL, IT IS IMPORTANT HOWEVER THAT THE BATTERY IS CHARGED PRIOR TO USE.

Safety

Safety messages are designed to alert you to possible dangers or hazards that could cause death, injury or equipment or property damage if not understood or followed. Safety messages have the following symbols:



You WILL be KILLED or SERIOUSLY INJURED if you do not follow instructions.



You CAN be KILLED or SERIOUSLY INJURED if you do not follow instructions.



You CAN be INJURED if you do not follow instructions or equipment damage may occur.

It is vital that you read and understand this user manual before using the product, including safety warnings, and any assembly and operating instructions. Keep the manual for future reference.

Safety precautions and recommendations detailed here must be fully understood and followed to reduce the risk of injury, fire, explosion, electrical hazard, and/or property damage.

Safety information presented here is generic in nature – some advice may not be applicable to every product. The term "equipment" refers to the product, be it electrical mains powered, battery powered or combustion engine powered.

- **Before Use** - If you are not familiar with the safe operation/handling of the equipment or are in any way unsure of any aspect of suitability or correct use for your application, you should complete training conducted by a person or organization qualified in safe use and operation of this equipment, including fuel/electrical handling and safety.
- Do NOT operate the equipment in flammable or explosive environments, such as in the presence of flammable liquids, gases, or dust. The equipment may create sparks or heat that may ignite flammable substances.
- Keep clear of moving parts.
- Equipment may be a potential source of electric shock or injury if misused.
- Do NOT operate the equipment if it is damaged, malfunctioning or is in an excessively worn state.
- Do NOT allow others to use the equipment unless they have read this manual and are adequately trained.
- Keep packaging away from children - risk of suffocation! Operators must use the equipment correctly. When using the equipment, consider conditions and pay due care to persons and property.

General Work Area Safety

- Work areas should be clean and well it.
- Do not operate the equipment if bystanders, animals etc are within operating range of the equipment or the general work area.
- If devices are provided for connecting dust extraction / collection facilities, ensure these are connected and used properly. Dust collection can reduce dust-related hazards.

General Personal Safety

- Wear appropriate protective equipment when operating, servicing, or when in the operating area of the equipment to help protect from eye and ear injury, poisoning, burns, cutting and crush injuries. Protective equipment such as safety goggles, respirators, non-slip safety footwear, hard hat, hearing protection etc should be used for appropriate equipment / conditions. Other people nearby should also wear appropriate personal protective equipment. Do not wear loose clothing or jewellery, which can be caught in moving parts. Keep hair and clothing away from the equipment.
- Stay alert and use common sense when operating the equipment. Do not over-reach. Always maintain secure footing and balance.
- Do not use the equipment if tired or under the influence of drugs, alcohol, or medication.
- This equipment is not intended for use by persons with reduced physical, sensory, or mental capabilities.

General Fuel Safety

- Petrol/fuel/gasoline is extremely flammable – keep clear of naked flames or other ignition sources.
- Do not spill fuel. If you spill fuel, wipe it off the equipment immediately – if fuel gets on your clothing, change clothing.
- Do NOT smoke near fuel or when refuelling.
- Always shut off the engine before refuelling.
- Do NOT refuel a hot engine.
- Open the fuel cap carefully to allow any pressure build-up in the tank to release slowly.
- Always refuel in well-ventilated areas.
- Always check for fuel leakage. If fuel leakage is found, do not start, or run the engine until all leaks are fixed.

General Carbon-Monoxide Safety

- Using a combustion engine indoors **CAN KILL IN MINUTES**. Engine exhaust contains carbon-monoxide – a poison you cannot smell or see.
- Use combustion engines OUTSIDE only, and far away from windows, doors, and vents.

General Equipment Use and Care

- Keep packaging away from children and pets, potential risk of suffocation or choking.
- The equipment is designed for domestic use only.
- Handle the equipment safely and carefully.
- Before use, inspect the equipment for misalignment or binding of moving parts, loose components, damage, or any other condition that may affect its operation. If damaged, have the equipment repaired by an authorised service centre or technician before use.
- Prevent unintentional starting of the equipment - ensure equipment and power switches are in the OFF position before connecting or moving equipment. Do not carry equipment with hands or fingers touching any controls. Remove any tools or other items that are not a part of the equipment from it before starting or switching on.
- Do not force the equipment. Use the correct equipment for your application. Equipment will perform better and be safer when used within its design and usage parameters.
- Use the equipment and accessories etc. in accordance with these instructions, considering working conditions and the work to be performed. Using the equipment for operations different from those intended could result in hazardous situations.
- Always keep equipment components (engines, hoses, handles, controls, frames, housings, guards etc) and accessories (cutting tools, nozzles, bits etc) properly maintained. Keep the equipment clean and, where applicable, properly lubricated.
- Store the equipment out of reach of children or untrained persons. To avoid burns or fire hazards, let the equipment cool completely before transporting or storing. Never place or store the equipment near flammable materials, combustible gases, or liquids etc.
- The equipment is not weather-proof, and should not be stored in direct sunlight, at high ambient temperatures or locations that are damp or humid.
- Do not clean equipment with solvents, flammable liquids, or harsh abrasives.
- For specific equipment safety use and care, see Equipment Safety.

General Electrical Safety

- Inspect electrical equipment, extension cords, power bars, and electrical fittings for damage or wear before each use. Repair or replace damaged equipment immediately.
- Ensure all power sources conform to equipment voltage requirements and are disconnected before connecting or disconnecting equipment.
- When wiring electrically powered equipment, follow all electrical and safety codes.
- Always use a Residual Current Device (RCD) (GFCI) / Earth Leakage Circuit Breaker / Safety Switch when operating this item (electrical items only).
- High voltage / high current power lines may be present. Use extreme caution to avoid contact or interference with power lines. Electrical shock can be fatal.

General Electrical Safety

- Electrically grounded equipment must have an approved cord and plug and be connected to a grounded electrical outlet.
- Do NOT bypass the ON/OFF switch and operate equipment by connecting and disconnecting the electrical cord.
- Do NOT use equipment that has exposed wiring, damaged switches, covers or guards.
- Do NOT use electrical equipment in wet conditions or in damp locations.
- Do NOT use electrical cords to lift, move or carry equipment.
- Do NOT coil or knot electrical cords, and ensure electrical cords are not trip hazards.

General Service Information

- The equipment must be serviced or repaired at authorised service centres by qualified personnel only.
- Replacement parts must be original equipment manufacturer (OEM) to ensure equipment safety is maintained.
- Do NOT attempt any maintenance or repair work not described in this manual.
- After use, the equipment and components may still be hot – allow the equipment to cool and disconnect spark plugs and/or electrical power sources and/or batteries from it before adjusting, changing accessories, or performing repair or maintenance.
- Do NOT adjust while the equipment is running.
- Perform service-related activities in suitable conditions, such as a workshop.
- Replace worn, damaged or missing warning/safety labels immediately.

Child Choking Hazard!



- **WARNING: CHOKING HAZARD - CHILDREN UNDER 8 YRS. CAN CHOKE OR SUFFOCATE ON SMALL PARTS. ADULT SUPERVISION REQUIRED.**
- Carefully inspect anything a baby or child could gain access to, including this product & packaging.
- Dangers include anything of a size that could become stuck or lodged in a baby or child's airway.
- Dangers include things like raw, hard fruit and vegetable pieces, large pieces of meat, bones or sausage skins, popcorn, nuts, hard lollies and corn chips, small magnets and batteries, coins, beads, marbles and small uninflated balloons, broken toys and smaller toys, buttons, keys, and coins. But there are also many more.
- Pay particular attention to accessories, nuts, bolts, screws, washers, caps, covers, loose parts, parts that could be removed or break off, pieces of packaging, staples, tape etc.
- In the case of any doubt, secure the item of concern in an appropriate manner, or completely remove the possibility of access by a baby or child.

HAZARDOUS COMPONENTS!

- **MOVING PARTS CAN CAUSE SERIOUS INJURY AND EVEN DEATH IF USED IMPROPERLY OR WITHOUT SUFFICIENT PPE.**
- **DO NOT USE THIS EQUIPMENT ON UNEVEN SURFACES AND ALWAYS MAINTAIN GOOD BALANCE WHEN USING THIS EQUIPMENT. FAILURE TO DO SO MAY CAUSE SERIOUS INJURY.**
- **MAINTAIN A SECURE GRIP OF THE TRIGGER ASSEMBLY AT ALL TIMES.**

READ ALL INSTRUCTIONS

- **WARNING: DUST GENERATED BY SANDING, SAWING, GRINDING, DRILLING AND OTHER CONSTRUCTION ACTIVITIES MAY CONTAIN CHEMICALS THAT CAN CAUSE SERIOUS HEALTH EFFECTS. EXAMPLES INCLUDE:**
  - Lead from lead-based paints.
  - Crystalline silica from bricks, cement and other masonry products.
  - Arsenic and chromium from chemically treated timber.
- The risk from exposure varies depending on how often this type of work is performed. To reduce exposure, work in a well-ventilated area and wear suitable personal protective equipment (PPE), such as an approved dust mask designed to filter fine particles.

IMPORTANT SAFETY INSTRUCTIONS

- **WARNING: ONLY USE ACCESSORIES SUPPLIED WITH THIS PRODUCT OR APPROVED BY THE MANUFACTURER. USING UNSUITABLE ACCESSORIES MAY INCREASE THE RISK OF INJURY. FOLLOW THE INSTRUCTIONS PROVIDED WITH EACH ACCESSORY.**
- Only use the product with the power supply unit specified or supplied by the manufacturer.

FOR ALL APPLIANCES

- Avoid dangerous environments – Do not use the appliance in damp or wet locations.
- Do not use in rain – Do not expose the appliance to rain or wet conditions.
- Keep children and bystanders away – Keep all persons at a safe distance from the work area.
- Dress appropriately – Do not wear loose clothing or jewellery, as these may become caught in moving parts. Wear suitable protective footwear and secure long hair.
- Wear eye protection – Always wear suitable safety glasses. Wear an appropriate dust mask if the operation produces dust.
- Use the correct appliance – Do not use the appliance for any purpose other than that for which it was designed.
- Do not force the appliance – It will operate more safely and effectively when used at the rate for which it was designed.

- Do not overreach – Maintain proper footing and balance at all times.
- Stay alert – Do not operate the appliance while tired or when your ability to operate it safely is impaired.
- Store idle appliances safely – When not in use, store the appliance indoors in a dry, secure place out of reach of children.
- Maintain the appliance with care – Keep the appliance clean and in good working condition. Follow the instructions for maintenance and changing accessories. Keep handles clean, dry and free from oil and grease.
- Check for damaged parts – Before further use, carefully inspect any damaged guard or other component to ensure it will operate correctly and perform its intended function. Check for misalignment or binding of moving parts, broken components, damaged mountings and any other condition that may affect operation. Damaged guards or components must be properly repaired or replaced by an authorised service centre unless otherwise specified in this manual.

FOR ALL BATTERY-OPERATED GARDEN APPLIANCES

- Do not charge the appliance in rain or wet locations.
- Do not use the battery-operated appliance in rain or wet conditions.
- **WARNING: ALWAYS REMOVE OR DISCONNECT THE BATTERY PACK BEFORE ADJUSTING, CLEANING, SERVICING OR TRANSPORTING THE LEAF BLOWER.**
- Do not dispose of batteries in fire. Batteries may explode. Dispose of batteries in accordance with local regulations.
- Do not open, dismantle or damage the battery. Leaking electrolyte may be corrosive and can cause injury to the eyes or skin. It may be harmful if swallowed.
- Handle batteries carefully to prevent the terminals from being short-circuited by conductive materials such as rings, bracelets or keys. A short circuit may cause the battery or conductor to overheat and result in burns or fire.
- Do not insert the battery pack while your finger is on the power switch. Ensure the switch is in the OFF position before installing the battery pack.

ADDITIONAL SAFETY WARNINGS

- When using an electrical appliance, always follow basic safety precautions.
- **READ ALL INSTRUCTIONS BEFORE USING THIS APPLIANCE.**
- **WARNING: TO REDUCE THE RISK OF FIRE, ELECTRIC SHOCK OR INJURY:**
  - Do not use on wet surfaces or expose the appliance to rain. Store indoors in a dry location.
  - Do not allow the appliance to be used as a toy. Close supervision is required when used near children.
  - Use only as described in this manual. Use only attachments recommended by the manufacturer.
  - Do not use the appliance if it is not working correctly, has been dropped or damaged, has been left outdoors, or has been immersed in water. Have it inspected by an authorised service centre.
  - Keep hair, loose clothing, fingers and all parts of the body away from openings and moving parts.
  - Do not charge the appliance outdoors.
  - Do not incinerate the appliance or battery pack, even if severely damaged. Batteries may explode in a fire.
  - Do not insert objects into openings. Do not operate the appliance with any opening blocked. Keep openings free of dust, lint, hair and other debris that may restrict airflow.
  - Do not handle the charger plug or appliance with wet hands.
  - Do not leave the appliance unattended with the battery pack installed. Remove the battery pack when the appliance is not in use and before servicing.
  - Switch off all controls before removing the battery pack.
  - Take extra care when using the appliance on stairs.

BATTERY PACK SAFETY WARNINGS

- Do not modify or attempt to repair the battery pack. Do not dismantle, open or shred the battery pack.
- Do not expose the battery pack or appliance to fire or excessive temperatures. Exposure to temperatures above 130°C may cause an explosion.
- Do not short-circuit the battery pack. Do not store battery packs where their terminals may contact each other or conductive objects. When not in use, keep the battery pack away from metal objects such as paper clips, coins, keys, nails and screws. Short-circuiting the battery terminals may cause burns or fire.
- Do not subject the battery pack to mechanical shock.
- Observe the positive (+) and negative (–) markings on the battery pack and appliance, and ensure correct installation.
- Keep the battery pack out of reach of children.
- Use only the battery pack recommended by the manufacturer for this appliance.
- Keep the battery pack clean and dry.
- If the battery terminals become dirty, wipe them with a clean, dry cloth.
- Charge the battery pack before use. Always use the specified charger and follow the charging instructions provided in this manual.
- Do not leave the battery pack on charge for prolonged periods when it is not in use.
- After extended storage, the battery pack may need to be charged and discharged several times to restore optimum performance.
- The battery pack performs best at normal room temperature, approximately 20°C ± 5°C.
- Use the battery pack only for its intended application. Do not use a battery pack or appliance that is damaged or modified. Damaged or modified batteries may behave unpredictably, resulting in fire, explosion or injury.
- Remove the battery pack from the appliance when it is not in use.
- Dispose of used batteries responsibly and in accordance with local regulations.

- Do not charge the battery pack outdoors, in rain or in wet locations.
- Recharge only using the charging cable specified by the manufacturer. A charging cable suitable for one type of battery pack may create a risk of fire if used with another battery pack.
- Use the appliance only with specifically designated battery packs. Using any other battery pack may create a risk of injury or fire.
- Under abusive conditions, liquid may be ejected from the battery. Avoid contact. If accidental contact occurs, rinse the affected area with water. If the liquid contacts the eyes, rinse with water and seek medical attention. Liquid ejected from the battery may cause irritation or burns.
- **SAVE THESE INSTRUCTIONS**
- **Keep these instructions for future reference and use them to instruct anyone who may operate the leaf blower. If you lend the appliance to another person, provide these instructions with it to help prevent misuse and possible injury.**

Safety Symbols

The product may have safety warning labels attached to it, explained below. Understand the symbols on your product and their meanings. If any stickers become unreadable, unattached etc., replace them.



Flammable Material Hazard
Flammable liquids, gases, or substances etc may present. Avoid ignition sources and open flames. Danger of fire.



Read User Manual
Read and fully understand product safety warnings, operation, procedures etc before using the product.



Use Hand Protection
Wear appropriate hand protection and take due care as the product or use of the product may present hand hazards.



Carbon-Monoxide Hazard
Do not use the product in confined areas or without adequate ventilation. Carbon-monoxide poisoning can be fatal.



Electrocution / Electrical Shock Hazard
High voltage or high current electricity may be present or required by the product. Take due care when handling electrical products, cables, plugs and leads. Electrical shock can be fatal.



Toxic Fumes / Dust Hazard
Using the product or by-products from use may produce fumes, smoke or particles that could be harmful if inhaled. Wear appropriate breathing protection and have adequate ventilation.



Explosive Material Hazard
Combustible liquids, gases, or substances etc may be present. Avoid ignition sources and open flames. Danger of explosion.



Cutting / Amputation Hazard
The product may have blades, edges or mechanical devices that can cause severe cut injury to fingers, limbs etc. Take due care when handling and using the product.



Crush Hazard
The product may have blades, edges or mechanical devices that can cause severe crush injury to fingers, limbs etc. Take due care when handling and using the product.



Single Operator Only
The product must be operated by a single person only. More than one person operating the product may introduce additional hazards.



Use Face Protection
Wear appropriate full-face protection and take due care as the product or use of the product may present face and eye hazards.



Use Foot Protection
Wear appropriate foot protection and take due care as the product or use of the product may present foot hazards.



Use Eye / Ear / Head Protection
Wear appropriate eye and / or ear and / or head protection and take due care as the product or use of the product may present eye, hearing, and head hazards.



Running Hazard
Do not run on or near the product as doing so may present a fall hazard.



Diving Hazard
Do not dive into the product as doing so may present a neck / head injury hazard.



Adult Supervision Required
Always supervise children and other users of a product to prevent drowning or injury.



Skin Penetration / Puncture Hazard
The product may produce pressure, emit liquids or objects that can cause severe injury to fingers, limbs, blood etc. Take due care when handling and using the product.



Hot Surface Hazard
Be aware that the product may produce high temperatures and hot surfaces that can cause burn injuries.



Flying Debris Hazard
Be aware that the product or use of the product may present hazards produced by flying debris. Wear appropriate clothing and protective devices.



Moving Parts Hazard
Be aware that the product contains or uses mechanical devices that move or rotate. Always wait for moving parts to stop fully before handling the product, adjusting, maintenance etc.

© Baumr-AG

 **Carbon-Monoxide Hazard** Do not use the product in confined areas or without adequate ventilation. Carbon-monoxide poisoning can be fatal.	 **Pull Hazard** Be aware that the product contains or uses mechanical devices that can pull in objects and can cause severe injury to fingers, limbs etc. Take due care when handling and using the product.	 **Slope / Fall Injury Hazard** Be aware that using the product on sloping surfaces or in slippery conditions may present additional dangers from falls and contact with blades, moving parts, hot surfaces etc.	 **"Slam Dunk" Warning** Do NOT attempt "slam dunk" manoeuvres as this may result in severe injury due to falling, product breakage or collapse etc.
 **Electrocution / Electrical Shock Hazard - Outdoor** High voltage or high current electricity may be present or required by the product. Do NOT use in rain, damp, or wet conditions. Electrical shock can be fatal.	 **Electrocution / Electrical Shock Hazard - Disconnect** High voltage or high current electricity may be present or required by the product. Always disconnect the product from the electrical supply before handling the product, adjusting, maintenance etc.	 **Power Line Electrocution Hazard** High voltage / high current power lines may be present. Use extreme caution to avoid contact or interference with power lines. Electrical shock can be fatal.	 **"Kick-Back" Hazard** High level of "kick-back" hazard that can cause the machine to suddenly rotate towards operator. Kick-back injury can be fatal.
 **Winch Operator Position Hazard** Do NOT stand between winch and load. Do NOT use winch to move people.	 **Winch Lift Hazard** Do NOT LIFT load vertically. Use machine to PULL only.	 **Cable Hazard** Ensure that load bearing cable is not kinked or knotted.	 **Winch Cable Hazard** Ensure that there is a minimum number of cable coils on winching mechanism.
 **Winch Hook Hazard** Carry hook to load – do NOT throw or run.	 **Flash / Blinding Hazard** Wear appropriate eye protection for welding. Direct exposure to weld arcs may cause permanent eye injury.	 **Laser Hazard** Laser may be in use – do NOT look directly at laser or allow others to.	 **Choking Hazard** Children under 8 yrs. Can choke or suffocate on small parts. Adult supervision required.

© Baumr-AG

Table of Contents

Safety **2**
Safety Symbols 6
Parts Identification **9**
Assembly **10**
Unpacking 10
Assembling and Removing the Quick-Release Tube 10
Assembling and Removing the Extension Tube 11
Installing and Removing the Battery Pack 12
Operation **13**
Charging the Battery 13
Intended Use 13
Starting and Stopping the Blower 13
Adjusting the Blowing Speed 14
Using the Blower 15
Lithium Battery Care and Maintenance **16**
Top 3 Battery Care Requirements 16
Maintenance **18**
General Maintenance Tips 18
Cleaning 18
Storage **18**
Troubleshooting **19**
Specifications **20**

© Baumr-AG

Parts Identification

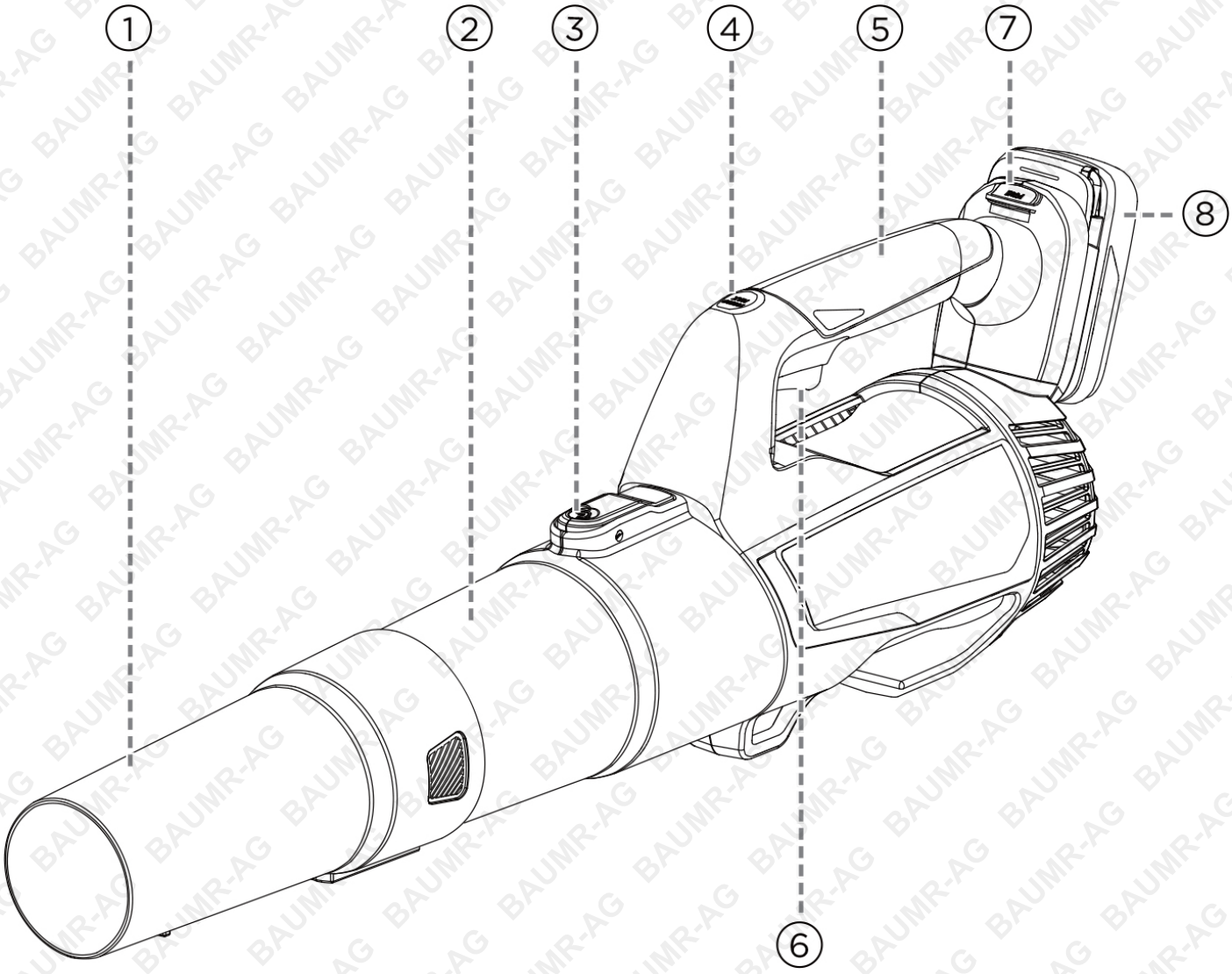

No.	Name	No.	Name
1	Extension Tube	5	Handle
2	Quick-Release Tube	6	On/Off Switch
3	Tube Release Button	7	Battery Pack Release Button
4	Maximum Speed Button	8	Battery Pack

© Baumr-AG

Assembly

WARNING: To prevent accidental starting, which could cause serious injury, always remove the battery pack before assembling or adjusting the appliance.

WARNING: Do not modify this appliance or use accessories not recommended by the manufacturer. Unauthorised modifications or accessories may create hazardous conditions and result in serious injury.

WARNING: Do not attempt to start the appliance until it has been completely assembled.

Unpacking

- This product requires assembly.
- Remove all items from the carton and check that all components listed in the packing list are included.
- Inspect the product carefully for any damage that may have occurred during transport.
- Do not discard the packaging until you have inspected the product and confirmed that it operates correctly.
- If any parts are damaged or missing, contact the manufacturer.

Assembling and Removing the Quick-Release Tube

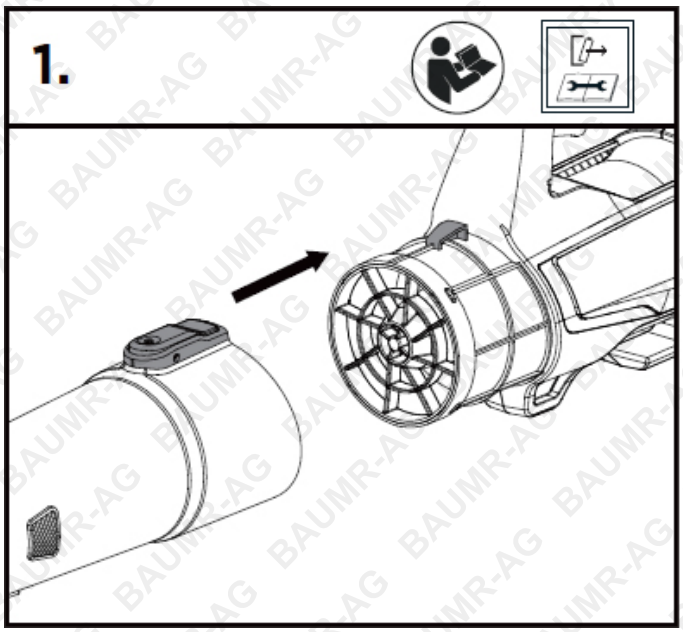

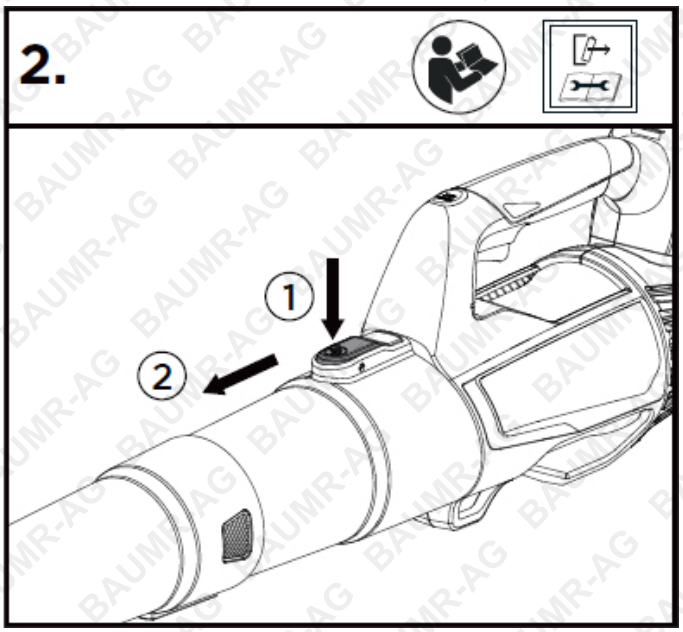

To Assemble

1. Align the quick-release tube with the main body as shown in Fig. 1.
2. Slide the tube onto the main body until it reaches the end.
3. Push firmly until it clicks into place.

To Remove

Press the tube release button and pull the quick-release tube away from the main body, as shown in Fig. 2.

Assembling and Removing the Extension Tube

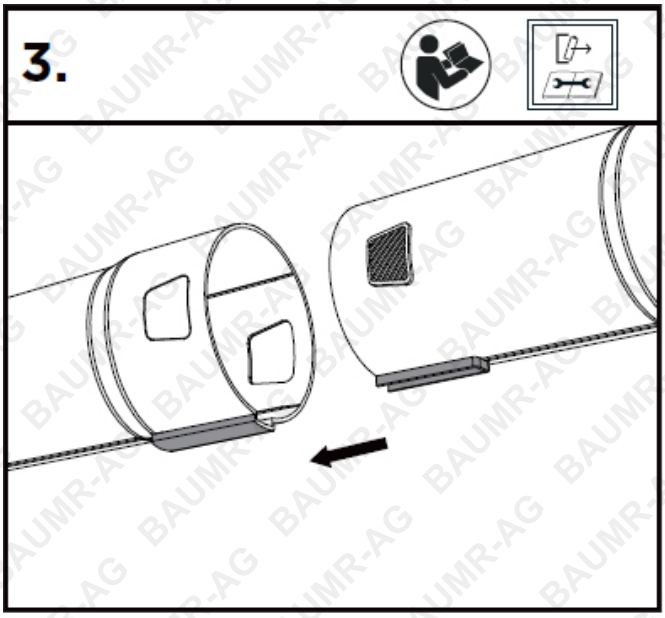

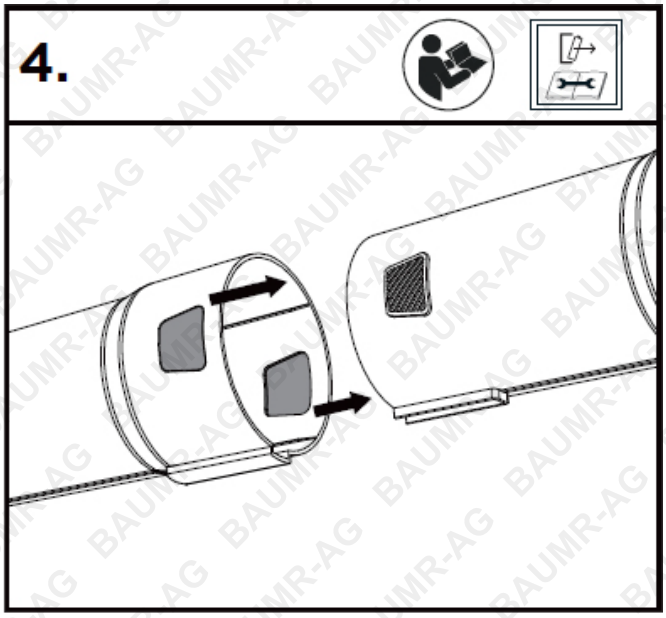

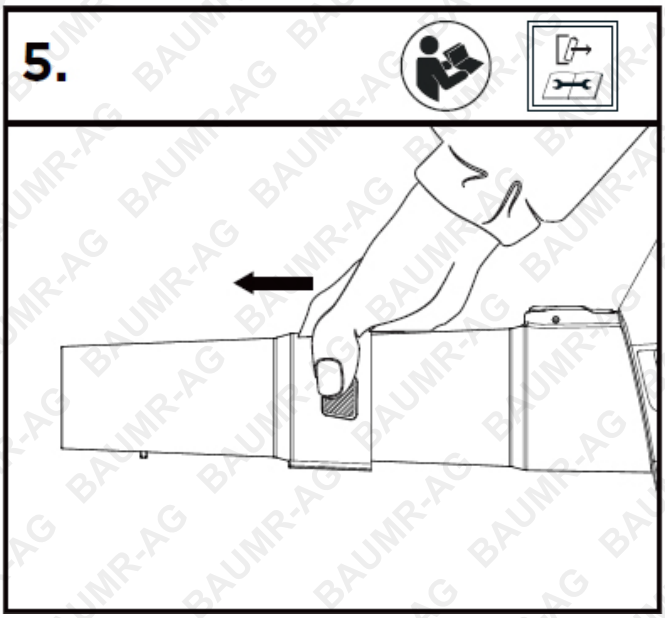

To Install

1. Align the raised centre section of the extension tube with the corresponding projection on the quick-release tube, as shown in Fig. 3.
2. Ensure the two square openings on the extension tube align with the two square projections on the quick-release tube, as shown in Fig. 4.
3. Push the extension tube onto the quick-release tube until it clicks securely into place.

To Remove

1. Press the square projections on the quick-release tube.
2. Pull the extension tube away from the quick-release tube.

Installing and Removing the Battery Pack

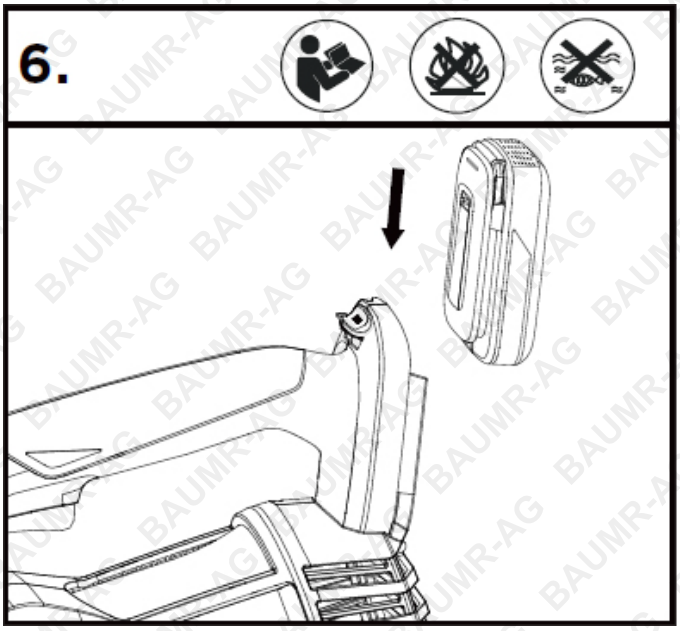

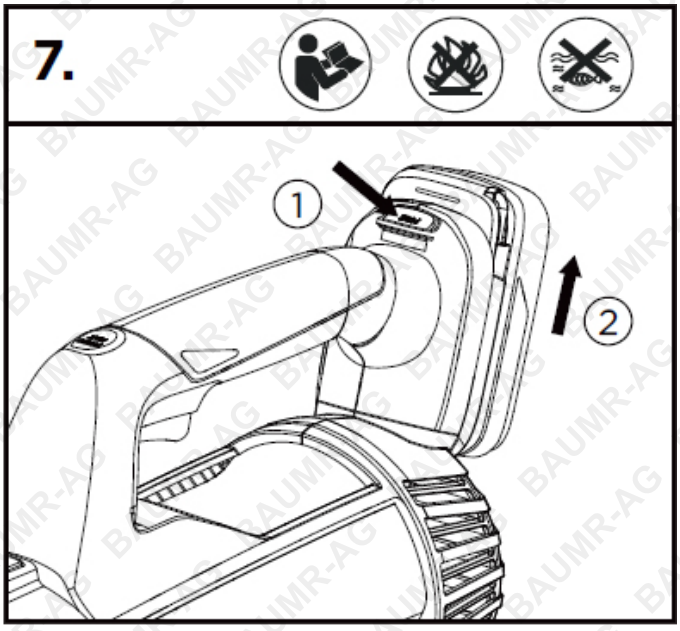

To Install

1. Align the battery pack with the battery compartment in the correct orientation, with the indicator light facing outwards.
2. Slide the battery pack fully into the compartment until it clicks securely into place.

NOTICE: Do not use excessive force when installing the battery pack. The battery pack can only be installed in one orientation.

To Remove

Press and hold the Battery Pack Release Button in the direction shown, then remove the battery pack.

© Baumr-AG

Operation

Charging the Battery

WARNING: Charge the battery in a dry, well-ventilated area away from combustible materials and ignition sources.

NOTICE: A charger is not supplied with this appliance. Use a charger that is compatible with the supplied charging cable and meets the charging requirements of the battery pack. If you have any questions, contact the manufacturer for assistance.

NOTICE: Lithium-ion batteries are supplied partially charged. Before first use, fully charge the battery.

NOTICE: Refer to the battery pack instructions for information about indicator lights and charging requirements.

Intended Use

This blower is intended for residential outdoor use only. Use it to move leaves and other light garden debris as required.

WARNING: Do not allow familiarity with this product to make you careless. A moment of inattention can result in serious injury.

WARNING: Do not use attachments or accessories that are not recommended by the manufacturer. Using unsuitable attachments or accessories may result in serious injury.

WARNING: To reduce the risk of injury or property damage, inspect the work area before using the blower. Remove hard objects and other hazards. Do not direct debris towards people, animals or property. Always use both hands when operating the blower.

Starting and Stopping the Blower

To Start the Blower

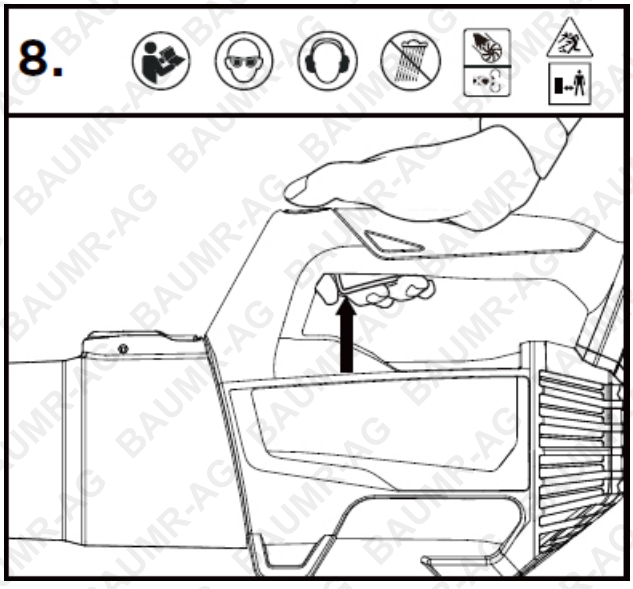

1. Hold the blower securely with both hands, keeping the tube approximately 20 cm above the ground.
2. Press and hold the On/Off Switch to start the blower. (Fig. 8)

To Stop the Blower

Release the On/Off Switch.

Adjusting the Blowing Speed

This blower has two speed modes: High Speed and Maximum Speed.

- When switched on, the blower starts in High Speed mode.
- Briefly press the Maximum Speed Button to switch between High Speed and Maximum Speed modes. (Fig. 9)

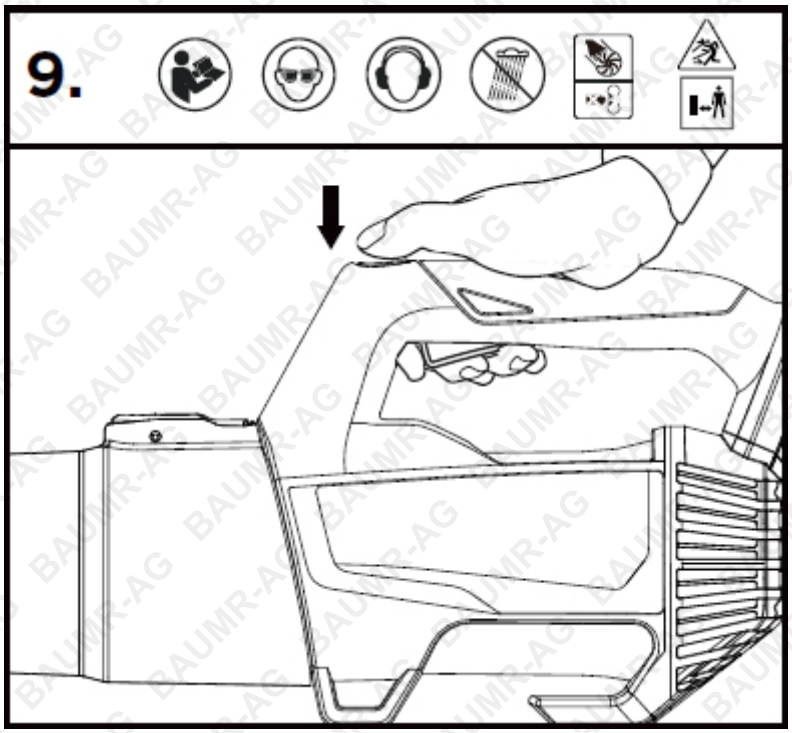

NOTICE: Maximum Speed mode significantly increases airflow and is suitable for moving heavy or wet debris.

© Baumr-AG

Using the Blower

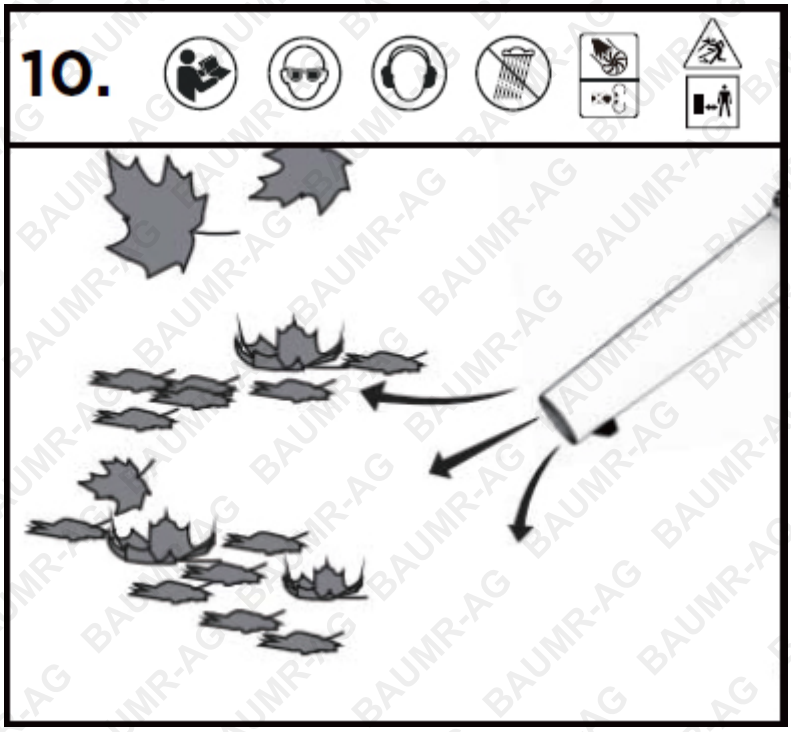

- Hold the blower tube approximately 20 cm above the ground during operation.
- Use a sweeping motion from side to side.
- Move forward slowly, keeping accumulated debris in front of you. (Fig. 10)

WARNING: Do not blow hard objects such as nails, bolts or rocks. Do not operate the blower near bystanders or pets. Take extra care when clearing debris from stairs or other confined areas. Wear suitable eye protection, long trousers and enclosed footwear.

© Baumr-AG

Lithium Battery Care and Maintenance

Top 3 Battery Care Requirements

1. **Charge battery before first use**. The battery may arrive with some charge, regardless of this the battery must be charged for 60 minutes on the initial charge and 60 minutes for each subsequent charge.
2. **Charge battery immediately when it is depleted.** Do not store a depleted battery. This will permanently impact the life of the battery. If the battery is going to be stored for a period of time, fully charge the battery before storing.
3. **Disconnect battery when not in use**. To prolong the life of a battery, disconnect it from the unit when not in use. Disconnect chargers from the battery once charged.

To ensure the battery maintains optimum performance, follow the guidelines outlined below.

- For best results, charge batteries in temperatures between 10°C and 30°C
- When battery is charged, disconnect the charger from the power supply and remove the battery from the charger.
- If a battery is stored or otherwise unused for an extended period, and the battery has no charge remaining when you check it, consider it to be damaged. Do not attempt to recharge it or to use it. Replace it with a new battery.
- Use only with the battery charger specified by the manufacturer.
- Ensure that the battery charger electrical cord is not subjected to damage or stress. Do not operate the battery charger if it has a damaged electrical cord or plug.
- Do not use the charger in wet areas or expose it to rain or water.
- The typical estimated life of a Lithium-Ion battery is about two to three years or 300 to 500 charge cycles, whichever occurs first. One charge cycle is a period of use from fully charged, to fully discharged, and fully recharged again.
- Explosion hazard – protect the battery against heat, for example, direct sunlight and fire. Do not store batteries in vehicles or locations subject to heat.
- Batteries can explode in the presence of an ignition source, such as a pilot light. To reduce the risk of serious personal injury, never use any cordless product in the presence of open flame. Exploding batteries can propel debris and chemicals.
- Do not open the battery – danger of short-circuiting and/or explosion.
- Do not attempt to destroy or disassemble the battery pack or remove any of its components.
- Do not touch the battery terminals with metal objects and/or body parts as short-circuit and/or personal injury may result.
- Explosion hazard – do not open and/or short-circuit the battery.
- Poison hazard – battery leakage (liquid ejection). Under extreme conditions, liquid may be ejected from the battery – avoid contact. If contact accidentally occurs, immediately seek medical attention, and flush with water. If liquid contacts eyes, immediately seek medical attention, flush with clean water for at least 10 minutes. Liquid ejected from the battery may cause irritation or burns.
- Dispose of non-serviceable batteries in an environmentally responsible manner and according to local regulations.

Failure to adhere to the requirements above may result in the battery becoming inoperative or battery life being reduced. In extreme cases or abuse, battery overheating, or fire may result.

DANGER - BATTERY CHARGING, USE AND STORAGE

Like mobile phones, laptops, cordless vacuum cleaners etc, this product may contain or be related to a lithium ion battery pack (lithium ion batteries and lithium ion battery related items only). Lithium ion batteries allow fast charging and high capacities, however care must be taken to reduce chances of a fault, and increase safety in case a fault occurs. Catastrophic incidents involving lithium ion batteries have a tendency to result in large amounts of smoke and fire. Be sure to follow the points below to reduce the likelihood of danger whenever you use, charge or store any lithium ion battery.

- Never charge a battery that has been damaged or subjected to a forceful impact.
- Never charge a battery that has been exposed to moisture or water.
- Never charge a battery with a charger that wasn't supplied with the battery.
- Never use a battery in a device that it wasn't specifically designed for.
- Never use a battery with a modified or damaged device.
- Never modify the battery, product, charger, circuitry or wiring.
- Never charge a battery in an exit path that may be used by people to leave a room or building in case of an emergency, for example, the hallway or foyer of a residence.
- Never charge a battery in an area or building that doesn't have the recommended number of working smoke detectors that have been tested in accordance with local guidelines.
- Never charge a battery when the battery or charger is displaying a problem or charging incorrectly.
- Always charge batteries on a non-combustible surface, for example, on a concrete floor.
- Always charge batteries at least 3m away from anything combustible, such as floors, wall surfaces, furniture, storage shelves etc.
- Always charge batteries in an open area (outside if possible) ensuring the battery and charger are away from moisture and water.
- Always disconnect batteries from the charger after charging.
- Always remove or disconnect batteries from the device/product when not in use.
- Always ensure batteries are charged under adult supervision. Do not charge unattended. Do not charge batteries while no one is home or while people are sleeping.
- Keep batteries away from heat and moisture.
- Damaged batteries should be disposed of through your local e-waste collection service.
- Avoid mixing and matching chargers. Unplug products when fully charged, and charge batteries in a cool, dry place away from combustible materials like beds, lounges, or carpet.
- During charging and use, check your lithium-ion batteries for overheating, signs of swelling, leaking, or venting gas. Immediately stop using your product if these signs are present.
- Allow batteries to cool after use and before charging.

Maintenance

WARNING: When servicing the blower, use only identical replacement parts. Using other parts may create a hazard or damage the product. To ensure safe and reliable operation, repairs should be carried out by a qualified service technician.

WARNING: To reduce the risk of serious injury, remove the battery pack before servicing, cleaning, changing accessories or removing material from the blower.

WARNING: Replace worn or damaged parts before use. Use only replacement parts recommended by the manufacturer.

WARNING: Do not use the blower if it is damaged. If abnormal noise or vibration occurs, stop using the blower and have the problem corrected before further use.

General Maintenance Tips

- Do not attempt to repair the blower yourself.
- Regularly check all fasteners and components for tightness to ensure the blower remains in safe working condition.
- Before each use, inspect the general condition of the blower. Check for:
  - loose components;
  - misaligned or binding moving parts;
  - cracked, broken or damaged parts; and
  - any other condition that may affect safe operation.

Cleaning

Regular cleaning and maintenance will help maintain performance and extend the life of the blower.

- After each use, wipe the exterior surfaces with a clean, damp cloth and mild soap.
- Do not immerse the blower in water or spray it with water.
- Do not use harsh detergents, solvents or other chemicals, as these may damage plastic components.

Storage

- Inspect the blower thoroughly for worn, loose or damaged parts. If repair or replacement is required, contact the manufacturer for assistance.
- Remove the battery pack. Allow the motor to cool, then clean the blower before storage.
- Store the blower indoors in a dry, well-ventilated and secure location, out of reach of children and unauthorised users.

© Baumr-AG

Troubleshooting

WARNING: Switch off the blower and remove the battery pack before performing any troubleshooting.

The following table lists common problems, possible causes and corrective actions. If the problem persists, contact the manufacturer for assistance.

Problem	Possible Cause	Remedy
Motor does not start.	Battery pack is not installed correctly.	Remove and reinstall the battery pack, ensuring it is fully inserted and securely locked in place.
	Battery pack is discharged.	Charge the battery pack.
	Battery pack is too cold.	Move the battery pack to a suitable indoor location and allow it to reach normal operating temperature before reinstalling it.
	The blower or battery pack has activated overheat protection.	Move the blower and battery pack to a cool, well-ventilated area. Allow them to return to normal operating temperature before restarting.
	On/Off Switch is faulty.	Contact the manufacturer for inspection or repair.

© Baumr-AG

Specifications

Motor Type	Brushless
Power Source	Battery, cordless
Battery Type	Lithium-ion
Battery Voltage	20 V
Battery Capacity	2.0 Ah
Battery Compatibility	Baumr-AG SYNC range
Charger	2.4 A
Charger Voltage	240 V
Plug Type	SAA
Charging Time	Approximately 60 minutes
Maximum Air Speed	45 ± 5 m/s
Minimum Air Speed	35 ± 5 m/s
Air Volume	12 ± 1.5 m³/min
Speed Settings	2
Runtime	Up to 6 minutes on high or 9 minutes on low
Operating Volume	90 dB(A)
Nozzle Diameter	75 mm
Specified Battery Cycle Life	More than 400 charge and discharge cycles

© Baumr-AG

Some experts believe that the incorrect or prolonged use of almost any product may cause serious injury or death. To help reduce your risk of serious injury or death, refer to the information below. For more information, see www.datastreamserver.com/safety

- Consult all documentation, packaging, and product labelling before use. Note that some products feature documentation available online. It is recommended to print and retain the documentation.
- Before each use, check the product for loose/broken/damaged/missing parts, wear, or leaks (if applicable). Never use a product with loose/broken/damaged/missing parts, wear, or leaks.
- Products must be inspected and serviced (if applicable) by a qualified technician every 6 months. This is based on average residential use by persons of average size and strength, and on a property of average metropolitan size. Use beyond these recommendations may require more frequent inspections/servicing.
- Ensure that all users of the product have completed a suitable industry recognised training course before being allowed access to the product.
- The product has been supplied by a general merchandise retailer that may not be familiar with your specific application or description of application. Be sure to attain third-party approval from a qualified specialist for your application before use, regardless of any assurances from the retailer or its representatives.
- This product is not intended for use where fail-safe operation is required. As with any product (for example, automobile, computer, toaster), there is the possibility of technical issues that may require the repair or replacement of parts, or the product itself. If the possibility of such failure and the associated time it may take to rectify could in any way inconvenience the user, business, or employee, or financially affect the user, business, or employee, then the product is not suitable for your requirements. This product is not intended for use where incorrect operation or a failure of any kind, including but not limited to, a condition requiring product return, replacement, parts replacement, or service by a technician may cause financial loss, loss of employee time or an inconvenience requiring compensation.
- If this product has been purchased in error when considering the information presented here, contact the retailer directly for details of their returns policy, if required.

edisons.com.au

© Baumr-AG. All rights reserved. No part of this document, including descriptive content, concepts, ideas, diagrams, or images may be reproduced or transmitted in any form or by any means, electronic or mechanical, including photocopying, scanning, or recording, or any information storage and retrieval system, without express permission or consent from the publisher.