FORNO®

Alta Qualita

DISHWASHER

WQP12-6702

FDWBI8010-24S

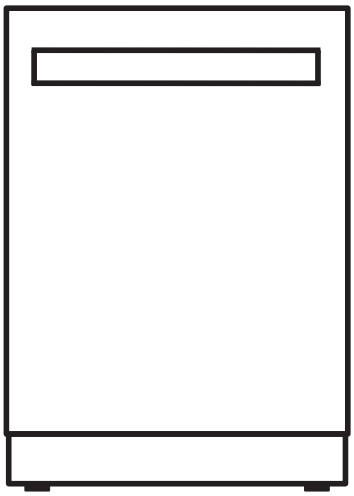

Customer Care

Thank you for purchasing a Forno product. Please read the entire instruction manual before operating your new appliance for the first time. Whether you are an occasional user or an expert, it will be beneficial to familiarize yourself with the safety practices, features, operation and care recommendations of your appliance.

Both the model and serial number are listed inside the product. For warranty purposes, you will also need the date of purchase .

Product Information

Model Number : _____

Serial Number : _____

Date of Purchase :_____

Purchase Address And Phone : _____

_____

_____

Service Information

Use these numbers in any correspondence or services calls concerning your product.

If you received a damaged product, immediately contact Forno.

To save time and money, before you call for serviced, check the troubleshooting guide. It listed the causes of minor operation problems that you can correct yourself.

“Need some quick help? Simply scan the qr code and get access to our fast support form. We’re always here to assist you with any questions or concerns you may have. So, don’t hesitate to reach out!”

Services in Canada and Untied States

Keep the instruction manual handy to answer your questions. If you don’t understand something or need more assistance, please visit our website for fast support. Please provide us your name, number, address,serial number of the product that troubleshooting, proof of purchase, and a short description of the issue. A customer service representative will contact you as soon as possible. All warranty work needs to be authorized by FORNO customer service. All our authorized service providers are carefully selected and rigorously trained by us.

Warranty

What this limited warranty covers:
The Warranty coverage provided by Forno Appliances in this statement applies exclusively to the original Forno appliance (“Product”) sold to the consumer (“Purchaser”) by an authorized Forno dealer/distributor/retailer, purchased and installed in the United States or Canada, and which has always remained within the original country of purchase (the United States or Canada). Warranty coverage is activated on the date of the Product’s original retail purchase and has a duration of two (2) years. This warranty does not cover installation at the time of purchase or during replacement.

Warranty coverage is non-transferable. In the event of replacement of parts or of the entire product, the replacement Product (or parts) shall assume the remaining original Warranty activated with the original retail purchase document. This Warranty shall not be extended with respect to such replacement. Forno Appliances will repair or replace any component/part which fails or proves defective due to materials and/or workmanship within 2 years of the date of the original retail purchase and under conditions of ordinary residential, non-commercial use. Repair or replacement will be free of charge, including labor at standard rates and shipping expenses. Purchaser is responsible for making the Product reasonably accessible for service. Repair service must be performed by a Forno Authorized Service company during normal working hours.

IMPORTANT
Retain proof of original purchase to establish warranty period. Forno’s liability on any claim of any kind, with respect to the goods and/or services provided, shall in no event exceed the value of the goods or service or part there of which has given rise to the claim.

30-Day Cosmetic Warranty
The Purchaser must inspect the product at the time of delivery. Forno warrants that the Product is free from

manufacturing defects in materials and workmanship for a period of thirty (30) days from date of the original retail purchase of the Product.

This coverage includes:
- Paint blemishes
- Chips
- Macroscopic finish defects

Cosmetic warranty does NOT cover:
> issues resulting from incorrect transport, handling and/or installation (e.g.: dents, broken, warped or deformed structures or components, cracked or otherwise damaged glass components);
> slight color variations on painted/enameled components;
> differences caused by natural or artificial lighting, location or other analogous factors;
> stains/corrosion/discoloration caused by external substances and/or environmental factors;
> labor costs, display, floor, B-stock, out- of-box,“as is” appliances and demo units.

How to receive service
To receive warranty services, the Purchaser must contact the Forno Support department in order to determine the problem and the required service procedures. Troubleshooting with a customer service representative will be necessary before moving forward with the service. Model number, serial number and date of original retail purchase will be requested.

Warranty Exclusions: What Is Not Covered

> Use of the Product in any non-residential, commercial application.
> Use of the Product for anything other than its intended purpose.
> Repair services provided by anyone other than a Forno Authorized Service agency.
> Damages or repair services to correct services provided by unauthorized parties or the use of unauthorized parts.
> Installation not in accordance with local/state/city/county fire codes, electrical codes, gas codes, plumbing codes, building codes, laws or regulations.
> Defects or damage due to improper storage of the Product.
> Defects.damage or missing parts on products sold out of the original factory packaging or from displays.
> Service calls or repairs to correct an incorrect installation of the Product and/or related accessories.
> Replacement of parts/service calls to connect, convert or otherwise repair the electrical wiring and/or gas line in order to properly use the product.
> Replacement of parts/service calls to provide instructions and information on the use of the Product.
> Replacement of parts/service calls to correct issues arising from the product being used in a manner other than what is normal and customary for residential use.
> Replacement of parts/service calls due to wear and tear of components such as seals, knobs, pan supports, shelving, cutlery baskets, buttons, touch displays, scratched or broken ceramic-glass tops.
> Replacement of parts/service calls for lack of/improper maintenance, including but not limited to: build up of residues, stains, scratches, discoloration, corrosion.
> Defects and damages arising from accidents, alteration, misuse, abuse or improper installation.
> Defects and damages arising from Product transport, logistics and handling. Inspection of the product must be made at time of delivery. Following receipt and inspection, the selling dealer/delivery company must be notified of any issues arising from handling, transport and logistics.
> Defects and damages arising from external forces beyond the control of Forno Appliances, including but not limited to wind, rain, sand, fires, floods, mudslides, freezing temperatures, excessive moisture or extended exposure to humidity, power surges, lightning, structural failures surrounding the appliance and other acts of God.
> Products whose serial number has been altered/damaged/tampered with. In no case shall Forno be held liable or responsible for damage to surrounding property, including furniture, cabinetry, flooring, panels, and other structures surrounding the Product. Forno is neither liable nor responsible for the Product if it is located in a remote area or an area where certified trained technicians are not reasonably available. Purchaser must bear any transportation and delivery costs of the Product to the nearest Authorized Service Center or the additional travel expenses of a certified trained technician.
> There are no express warranties other than those listed and described above, and no warranties, either express or implied, including, but not limited to, any implied warranties of merchantability or fitness for a particular purpose that shall apply after the express warranty periods stated above, and no other express warranty or guarantee given by any person, firm or corporation with respect to this product shall be binding on forno. forno shall not be liable for loss of revenue or profits, failure to realize savings or other benefits, time away from work, meals, loss of food or beverages, traveling or hotel expenses, expenses to rent or purchase appliances, remodeling/construction expenses in excess of direct damages which are undeniably caused exclusively by forno or any other special, incidental or consequential damages caused by the use, misuse or inability to use this product, regardless of the legal theory on which the claim is based, and even if forno has been advised of the possibility of such damages. nor shall recovery of any kind against forno be greater in amount than the purchase price of the product sold by forno and causing the alleged damage.without prejudice to the foregoing, purchaser assumes all risk and liability for loss, damage or injury to purchaser and purchaser's property and to others and their property arising from the use, misuse, or inability to use this product sold by forno that is not a direct result of negligence on the part of forno this limited warranty shall not extend to anyone other than the original purchaser of this product, is non-transferable, and states your exclusive remedy.

CONTENTS

IMPORTANT SAFETY INSTRUCTIONS 3
PACKAGE CONTENTS 6
SPECIFICATIONS 6
MAIN COMPONENTS 6
INSTALLING AND SETTING UP YOUR DISHWASHER 7
- Before using your dishwasher 7
- Finding a suitable location 7
- Providing a proper power supply 7

UNDERSTANDING YOUR DISHWASHER'S FEATURES 8
- How your dishwasher cleans 8
- Wash cycle selections 8
- Filter system 8
- Smart wash system 8
- Adjustable upper rack 9

USING YOUR DISHWASHER 10
- Using the control panel 10
- Recommended Cycle for typical use: 10
- Wash Cycle Selections 11
- Preparing dishes for washing 13
- Adding a dish 19
- Filing the Detergent Dispenser 20
- How much Detergent to use 20
- Water Hardness 21
- Rinse Aid 21
- To refill the rinse aid dispenser 22

FACTORS AFFECTING PERFORMANCE 23
- Using rinse aid 23
- Water temperature 23
- Heat dry function 23
- Water pressure 23
- Cleaning the stainless steel panel 24
- Cleaning the control panel 24
- Cleaning the stainless steel inner door and tub 24
- Cleaning the filters 24
- Cleaning the door and tub gaskets 26
- Cleaning the air gap 27

PROTECTING YOUR DISHWASHER FOR LONG PERIODS 28
TROUBLESHOOTING 29
- Error codes 29

TROUBLESHOOTING 30

IMPORTANT SAFETY INSTRUCTIONS



CAUTION

CAUTION
RISK OF ELECTRIC SHOCK
DO NOT OPEN



CAUTION

This symbol indicates that dangerous voltage constituting a risk of electric shock is present within your dishwasher.



WARNING

This symbol indicates that there are important operating and maintenance instructions in the literature accompanying your dishwasher.

WARNING-When using your dishwasher, follow basic safety precautions, including the following:

1. Read these instructions.
2. Keep these instructions.
3. Heed all warnings.
4. Follow all instructions.
5. Clean only with a damp cloth.
6. Do not block any ventilation openings. Install in accordance with the manufacturer's instructions.
7. Make sure that the available AC power matches the voltage requirements of this appliance.
8. Refer all servicing to qualified service personnel. Servicing is required when the appliance has been damaged in any way or it does not operate normally.

IMPORTANT SAFETY INSTRUCTIONS



WARNING

Electric Shock Hazard

Failure to follow these instructions can result in electric shock, fire, or death.

1. WARNING-DANGER —Never allow children to play with, operate, or crawl inside the dishwasher.
2. Turn off the dishwasher before carrying out user maintenance on it.
3. If a component part is damaged, it must be replaced by the manufacturer, its service agent, or similar qualified persons in order to avoid a hazard.
4. This appliance is intended to be used in household and similar environments.

Basic precautions before use:

- Read all instructions before using the dishwasher.
- The manual does not cover every possible condition and situation that may occur.
- Use the dishwasher only for intended function as described in this manual.
- When loading items to be washed:
  - Load sharp items and knives so that they are not likely to damage the door seal and tub.
  - Load sharp items and knives with the handles up to reduce the risk of cut-type injury.
- Do not wash plastic items unless they are marked dishwasher safe or the equivalent, if not marked, check with manufacture for recommendation, items that are not dishwasher safe may melt and create a potential fire hazard.
- If the dishwasher drains in to a garbage disposal, make sure disposal is completely empty before running dishwasher.
- Do not tamper with the controls.
- Do not operate your dishwasher unless all enclosure panels are properly in place.
- Do not touch the heating element during or immediately after use, especially if the sanitize option has been selected.
- Do not let children abuse, sit, or stand on door or racks of the dishwasher.
- Under certain conditions, hydrogen gas may be produced in a hot water system that has not been used for two weeks or more. HYDROGEN GAS IS EXPLOSIVE. If the hot water system has not been used for such a period, before using on all hot water faucets and let water flow from each for several minutes. This will release any accumulated hydrogen gas. Hydrogen gas is flammable. Do not smoke or use an open flame during this time
- Do not store or use combustible materials, gasoline or other flammable vapors and liquids in the vicinity of this or any other appliance.

IMPORTANT SAFETY INSTRUCTIONS

- Use only detergents or rinse agents recommended for use in a dishwasher and keep them out of the reach of children.
- Keep young children and infants away from dishwasher when it is operating.
- Do not use the dishwasher if it has a damaged power line or plug, and do not plug the dishwasher into a damaged outlet, failure to observe these instructions may result in electrical shock.
- Remove the door to the washing compartment when removing an old dishwasher from service or discarding it.
- To reduce the risk of injury, do not allow children to play in or on a dishwasher.

SAVE THESE INSTRUCTIONS

PACKAGE CONTENTS

- Dishwasher
- Kickboard
- Installation kits
- User Guide
- Installation Guide

SPECIFICATIONS

Specifications	Capacity Max 16 place settings
Dimensions (WxDxH)	Including Bar handle: (23.86 x 26.59 x 33.75 in) 606 x 675 x857 mm Excluding Bar handle: (23.86 x 24.53 x 33.75 in) 606 x623 x857 mm
Power requirements	120 V~60 Hz
Current	8.4 A
Water pressure	Between 20 and 120 psi

MAIN COMPONENTS

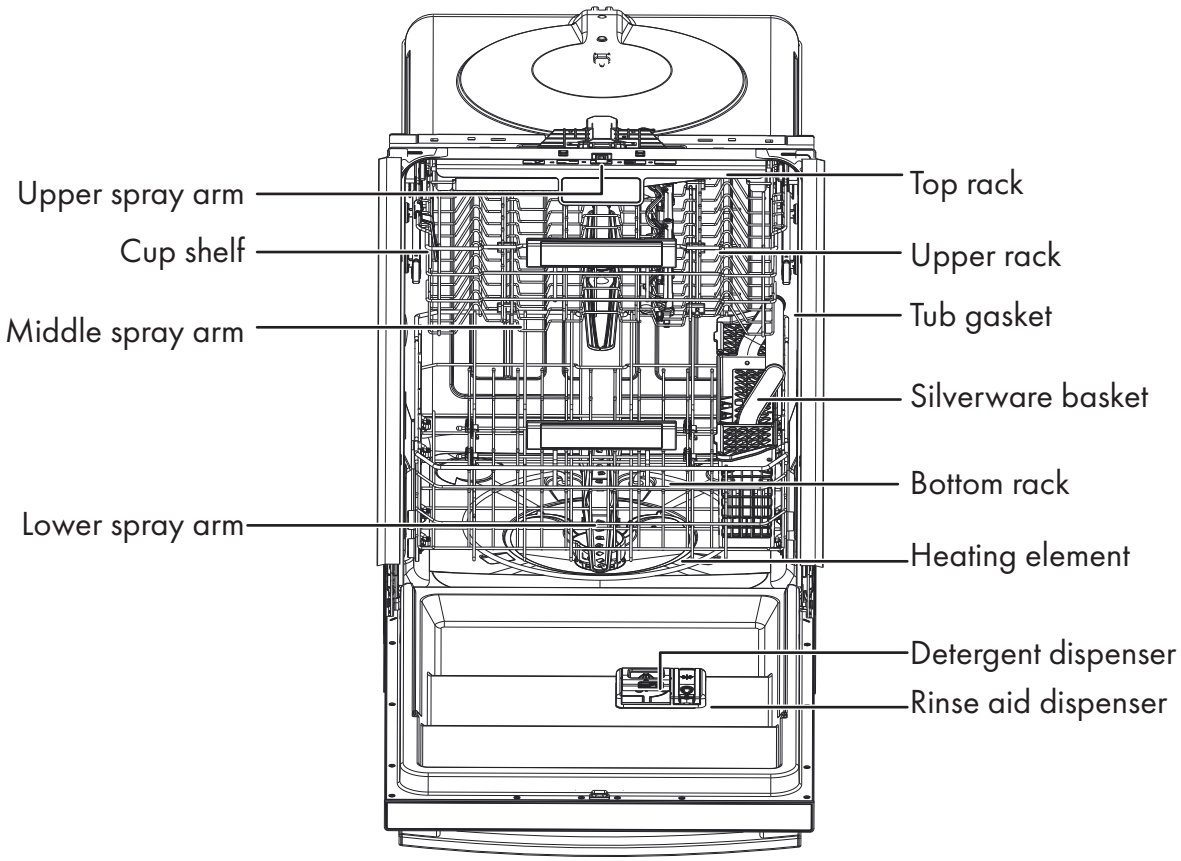

INSTALLING AND SETTING UP YOUR DISHWASHER

1. Water supply temperature should be between 120° F and 149° F (49° C and 65° C).
2. Dispose of the discarded appliance and packing material properly.
3. The dishwasher must be grounded or it can result in a risk of electric shock.
   If there is any damage of the contact to the dishwasher, please contact 4 Customer Service. Do not attempt to repair or replace any part by yourself.
4. For information on installing and setting up your dishwasher, refer to the Installation Guide provided.

BEFORE USING YOUR DISHWASHER

1. Remove the interior packing.
2. Clean the interior surface with lukewarm water using a soft cloth.

FINDING A SUITABLE LOCATION

- This dishwasher is designed to be built-in.
- The dishwasher door must be able to swing fully open.

PROVIDING A PROPER POWER SUPPLY

- Check your local power source. This dishwasher requires a 120V, 60Hz power supply.
- Refer to the Installation Guide for additional information

UNDERSTANDING YOUR DISHWASHER'S FEATURES

HOW YOUR DISHWASHER CLEANS

The dishwasher fills with water, covering the filter area at the bottom.

Water is then pumped through the various filter and spray arms, spraying a mixture of hot water and detergent against the soiled surfaces of your dishes and silverware. Soil particles are separated and go down the drain as the dirty water is drained and replaced with clean water. The number of water fills is determined by the cycle selected.

WASH CYCLE SELECTIONS

Cycle times are approximate and will vary with options selected. Hot water is necessary to activate dishwasher detergent and melt fatty food soils.

An automatic sensor checks the incoming water temperature and, if it is not hot enough, the timer will be delayed to allow for the water to heat for the main wash of all cycles. This happens even when hi-temp wash is selected, so that higher temperature will be available to handle heavier soil loads.

FILTER SYSTEM

Your dishwasher has a multiple filter system which includes four separate filter meshes. It separates dirty water and clean water into different chambers.The multiple filter system helps your dishwasher to get better performance with less water and less energy.

SMART WASH SYSTEM

Your dishwasher has a smart wash system under the normal wash program which selects the wash cycle based on how large and how soiled the load, permitting your dishwasher to clean more efficiently every time. When a partial load of lightly soiled dishes is placed in the unit, a short wash cycle is automatically selected. When a full load of heavily soiled dishes is placed in the unit, a heavy wash cycle is automatically selected.

UNDERSTANDING YOUR DISHWASHER'S FEATURES

ADJUSTABLE UPPER RACK

The upper rack of your dishwasher can be raised or lowered to accommodate loading dishes of varying heights in either rack. After removing the 3rd rack, the upper rack clearance height can be adjusted from 8" to 10". The lower rack clearance height can be adjusted from 11" to 13". See "Adjusting the upper rack" on page 14.

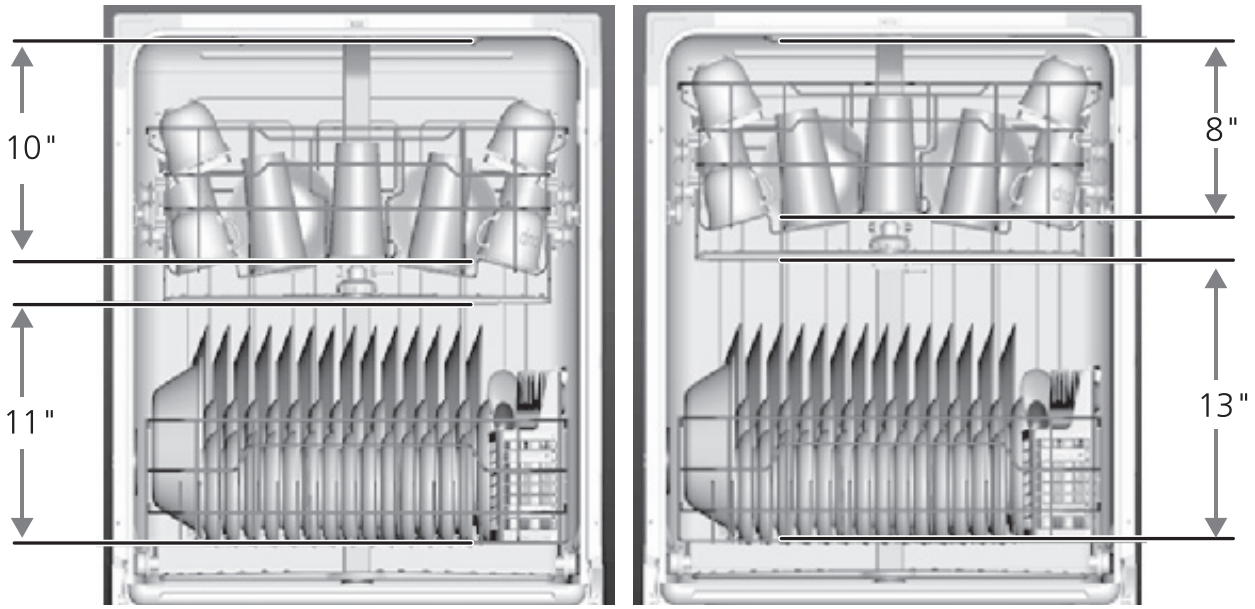

USING YOUR DISHWASHER

USING THE CONTROL PANEL

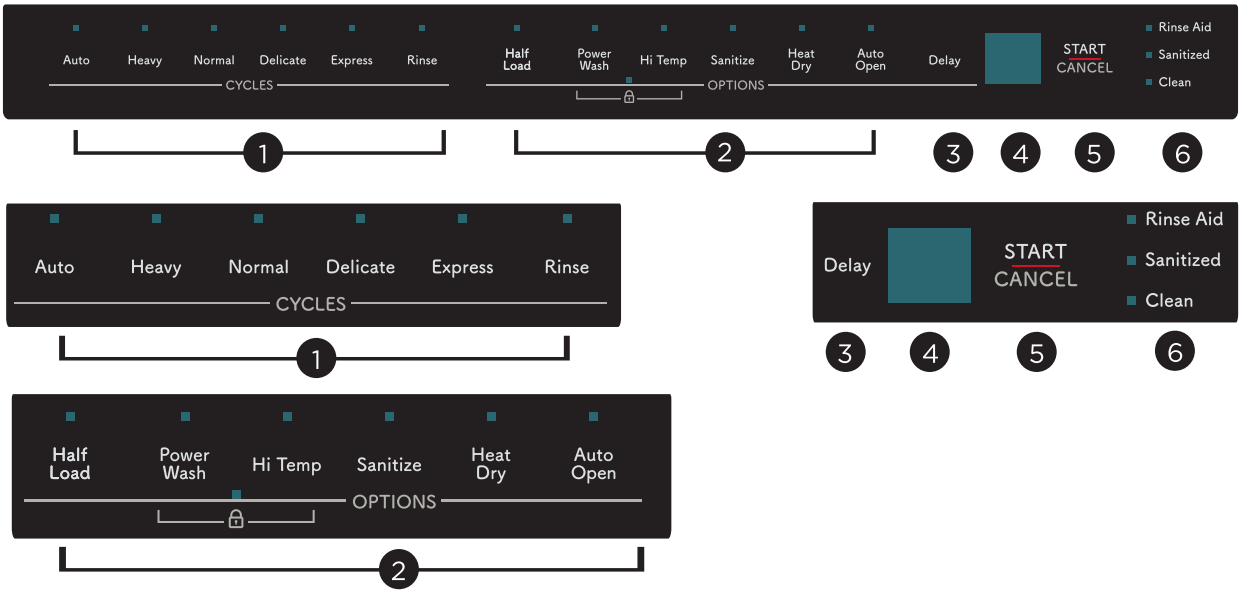

Notes

- Your dishwasher uses a DishSense Technology to understand how much food is on the dishes and then adjusts the cycle accordingly.

CAUTION

Before starting dishwasher be sure that the water is connected and turned on. Failure to do so may cause damage to the pump seal and result in water leakage.

Cycle times are approximate and will vary with options selected. Hot water is necessary to activate dishwasher detergent and melt fatty food soils. An automatic sensor will check the incoming water temperature and, if it is not hot enough, the cycle will be lengthened for automatic water heating in the main wash and final rinse of all cycles.

Notes

- Lights on the console will remain on once the door is shut and wash cycle begins. If it is preferred to have the lights turn off while cycle is running see Console Lights section for instructions.

RECOMMENDED CYCLE FOR TYPICAL USE:

The Normal Wash cycle with its factory default options of normal temperature and heated dry together provide the best all around performance. This cycle selection is recommended for everyday use and is suitable for a large range of both dish load sizes and food quantities remaining on those dishes.

USING YOUR DISHWASHER

WASH CYCLE SELECTIONS

1- Press button to select corresponding washing cycle and the cycle indicator will illuminate. **Auto, Heavy, Normal, Delicate, Express,Rinse** can be selected.

Auto—This cycle detects the turbidity degree and loading level of the washing items and automatically selects an optimal wash cycle for best performance.

Heavy—Heavy cycle is for pots, pans, casseroles and dinnerware with dried-on or baked on soil.This cycle uses a DishSense

Normal—Normal cycle is to completely wash and dry a full load of normally soiled dishes. The energy usage label is based on this cycle and option combination with the upper rack in the raised position.This cycle uses a DishSense.

Delicate—This cycle is for lightly soiled china and crystal.

Express—This cycle is for lightly soiled, pre-rinsed dishes and silverware.

Rinse —This cycle is for pre-rinsing dishes or glassware. This is only a rinse that keeps food from drying on the dishes and reduces odor buildup in the dishwasher until you are ready to wash a full load. Do not use detergent.

#	CYCLE	DESCRIPTION	WATER USE	CYCLE TIME (MINUTES)
1	AUTO	Auto sensing wash, lightly, or heavily soiled crockery, with or with out dried-on food.	2.4-4.7 gal. (11.0-21.5 1)	102 - 137
2	NORMAL	Use for regularly soiled dinner dishes or silverware.	2.2-4.6 gal. (10 1 -21 1 l)	102-137
3	HEAVY	Use for hard-to-clean, heavily soiled dishes, pots, and pans.	4.6-gal. (21.1 l)	143
4	DELICATE	Use for lightly soiled crockery and glass.	3.9 gal. (17.8 l)	110
5	EXPRESS	Use for lightly soiled and pre-rinsed dishes and silverware.	3.4 gal. (15.3 l)	60
6	RINSE	Use for pre-rinsing dishes or glasses. This is only a rinse that keeps food from drying on your dishes and reduces odor buildup in your dishwasher until you are ready to wash a full load. Do not use detergent.	1.7 gal. (7.9 l)	17

USING YOUR DISHWASHER

2-Options

Half Load —For lightly soiled or pre-rinsed dishes and silverware. This option will save water consumption.

Power Wash—Use this option to wash pots, pans, durable serving bowls and other large, heavily soiled or hard-to-clean dishes.It will employ increased water intake and higher temperatures for cleaning.It can not be used with Express,Delicate and Rinse.

Hi Temp Wash—When the HI TEMP WASH function is selected, the temperature of the water will be maintained at 140°F (60 °C) maximum. Sanitize—The sanitize option sanitizes dishes and glassware in accordance with NSF International NSF/ANSI Standard 184 for Residential Dishwashers. Certified residential dishwashers are not intended for use in licensed food establishments.This cycle uses a DishSense

Heat Dry —When the HEAT DRY function is selected, the heater will operate during the drying process.

Automatic Door Opener (ADO)

To get a better drying performance, the door will open automatically at the end of washing cycle. To protect the cabinet from corroding by the steam, please paste the protective tape which is provided as accessory before secure the dishwasher.

Refer to the installation instructions for more information.

3-Delay

The Delay option allows you to automatically delay starting your dishwasher 1-12 hours.

To start the **Delay** option, press **Delay** until the desired delay time shows in the **Status** window. Press the **START/Cancel** button to start the delay option. If the delay option is interrupted, the **START/ Cancel** button will have to be pressed again to return to delay option.

4-Display Window

Displays the remaining hours and minutes of the running cycle, delay hours, error codes, etc.

5-START/Cancel Button

When cycle and options are selected, LEDs of selected cycle and options are illuminated. The status window displays the cycle time. To start the cycle, press the **START/Cancel** button and immediately close the dishwasher door. You can cancel a cycle anytime during the cycle. Press and hold the **START/Cancel** pad for 3 seconds. The light above the cycle and option selected will go out, and the **START/ Cancel** light will remain illuminated, the dishwasher will start a 60 second drain. At the end of the drain, select the next desired cycle. Press and hold the **Start/ Cancel** pad for another 3 seconds to cancel the drain phase.

USING YOUR DISHWASHER

6-Indicator

Rinse Aid Indicator Light

Illuminates when the dishwasher requires additional rinse aid.

Sanitized Indicator Light

If a cycle with the sanitize function is finished, the SANITIZED indicator light turns ON. If the door is opened, it will turn OFF after 30 seconds.

Clean Indicator Light

Turns ON after a cycle finished. If the door is opened, it will turn OFF after 30 seconds.

Getting Started

1. Load Dishwasher (See Preparing and Loading Dishes).
2. Add detergent (See Dishwasher Dispenser & Detergents).
3. Add Rinse Aid, if needed (See Rinse Aid).
4. Run hot water faucet nearest dishwasher until water is hot. Turn water off.
5. Select desired Cycle (See Cycle Chart).
6. Select desired **Dry Option** (See **Dry Option** Selections).
7. To start, press **START/Cancel** pad and close door immediately.

To Start a Cycle

When cycle and options are selected, LEDs of selected cycle and options are illuminated. The status window displays the cycle time and the LED above the **START/Cancel** button illuminates.

To start the cycle, press **START/Cancel** button and immediately close the dishwasher door.

The status window displays "CLOSE" after the START/C ancel button is pressed

Preparing and loading dishes

PREPARING DISHES FOR WASHING

- Scrape away large pieces of food, bones, pits, toothpicks, and similar items. The continuous filtered was aining food particles.



USING YOUR DISHWASHER

- Burned-on foods should be loosened before loading.
- Empty liquids from glasses and cups.
- Foods such as mustard, mayonnaise, vinegar, lemon juice, and tomato-based products may cause discoloration of stainless steel and plastics if allowed to sit for a long period of time. Unless the dishwasher is to be operated at once, it is best to rinse off these types of foods.
- If the dishwasher drains into a garbage disposal, be sure the disposal is completely empty before starting dishwasher.

Adjusting the top rack

This dishwasher has a convenient top rack for silverware, cutlery, and small items. This rack can be adjusted to accommodate varying loads, as shown below.

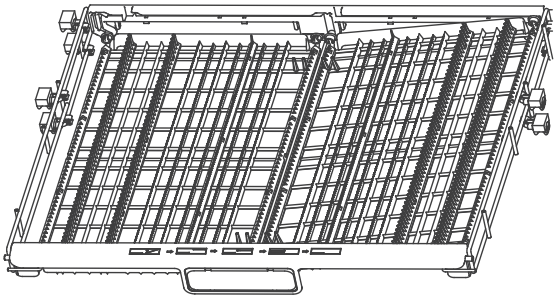



Left rack adjusted to lower position and right rack angled



Left rack adjusted to lower position and right rack to upper position



Left rack adjusted to lower position and right rack moved to the left



Left rack adjusted to lower position and right rack removed

USING YOUR DISHWASHER

Adjusting the upper rack

The height of the upper rack can be adjusted to accommodate loading taller dishes in either rack.

1 Lift the rack to move it to the upper position.

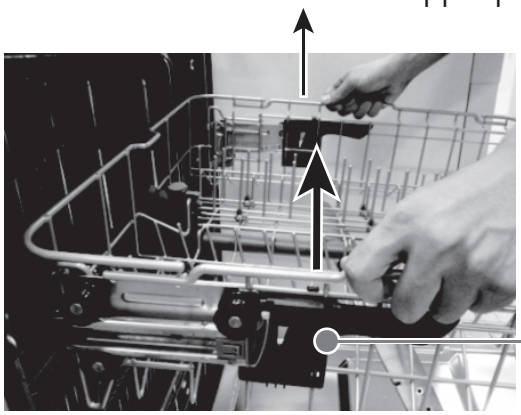

Upper rack in the upper position

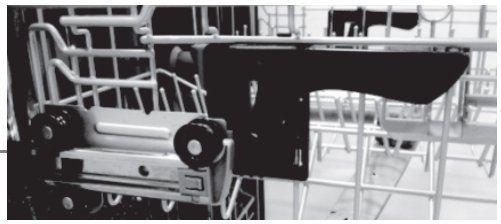

2 Press the handle to move it to the lower position.



Upper rack in the Lower position



Loading the upper rack

The upper rack is designed for cups, glasses, small plates, bowls, and plastic items marked dishwasher-safe.For best results, place the items with the soiled surface facing down or toward the center. Tilt them slightly for better drainage.

Notes

Make sure the loaded dishes do not interfere with the rotation of the middle spray arm, which is located just below the upper rack. You can check this by rotating the middle spray arm by hand.

USING YOUR DISHWASHER

Loading suggestions are shown below:

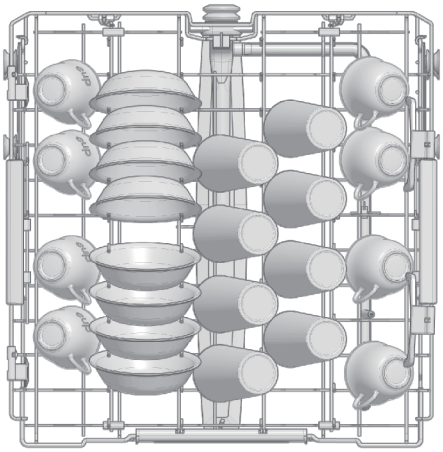

8 place settings

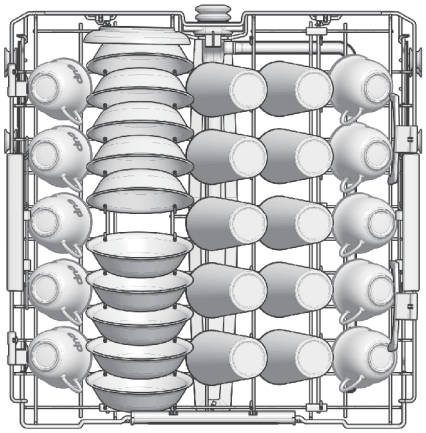

10 place settings

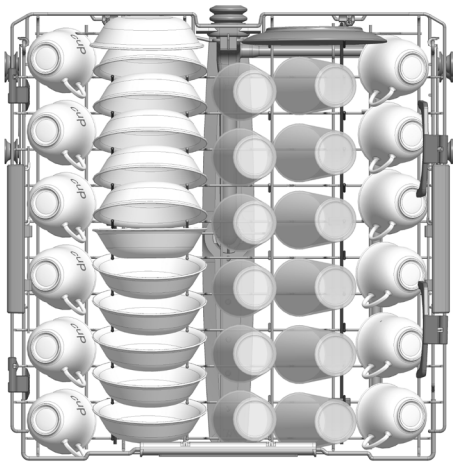

12 place settings

USING YOUR DISHWASHER

Loading the bottom rack

The bottom rack is designed to accommodate plates, bowls, saucers, and cookware. The adjustable rack lets you load items up to 13 inches high. Large items should be placed along the edge, with the inside faces down, so they do not interfere with the middle or lower spray arms or prevent the detergent dispenser from opening.

The fold-down tines on the bottom rack are provided to support extra large and hard-to-f it items. The tines may be left up for normal use or folded down for more flexible loading of larger items.

Loading suggestions are shown below:

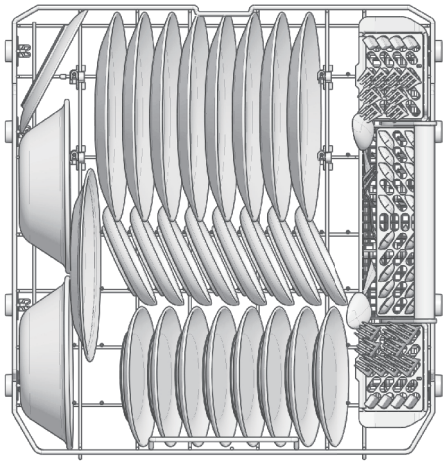

8 place settings

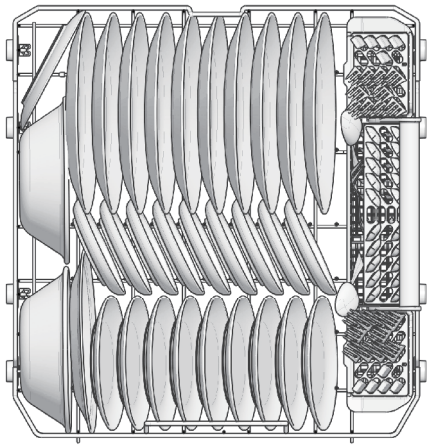

10 place settings

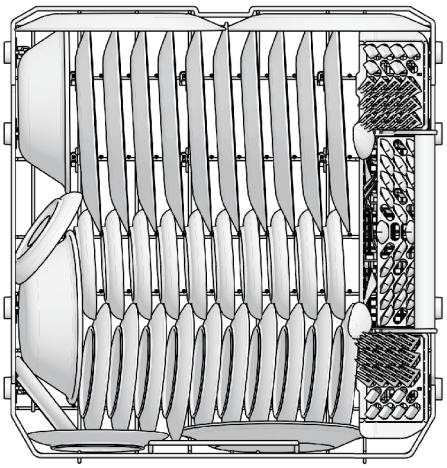

12 place settings

USING YOUR DISHWASHER

Loading the top rack

You can place the items in the top rack randomly or in an orderly fashion. The image below shows how to load the top rack for 16 place settings:

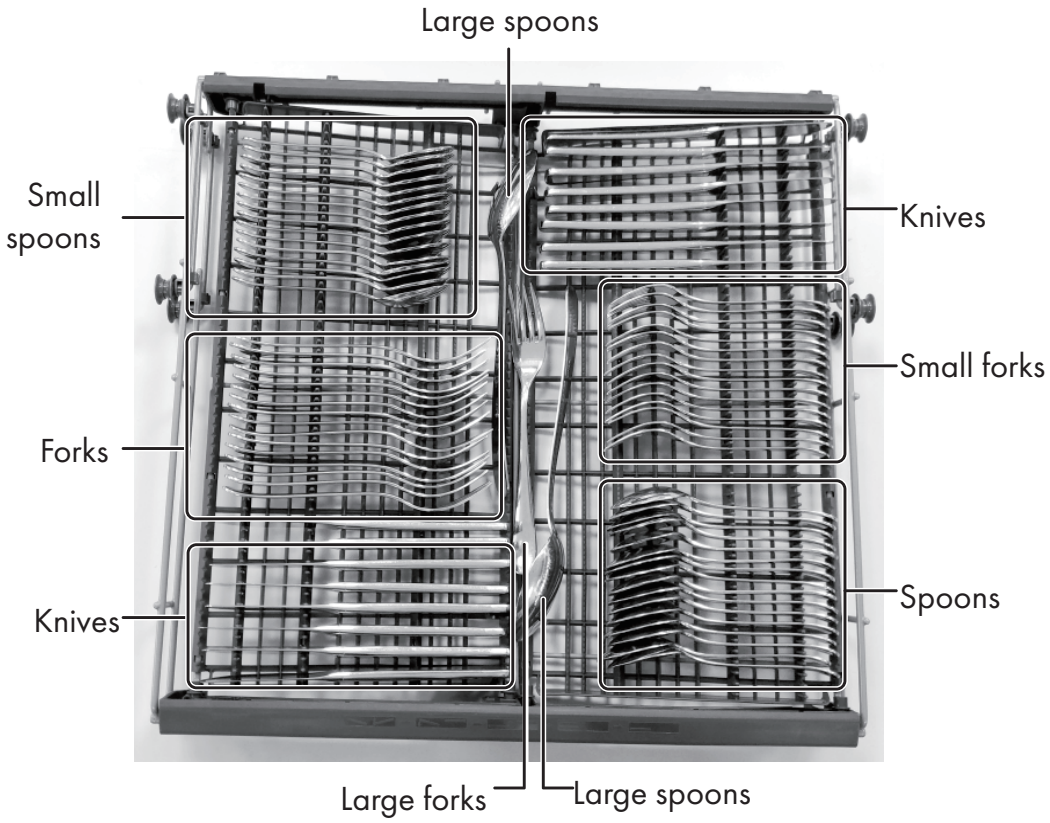

USING YOUR DISHWASHER

Loading the silverware basket

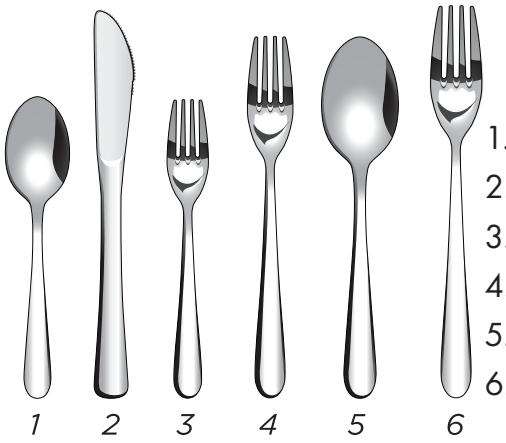

1. Cucharas
2. Cuchillos
3. Tenedores de ensalada
4. Tenedores
5. Cucharas de mesa
6. Tenedores de mesa

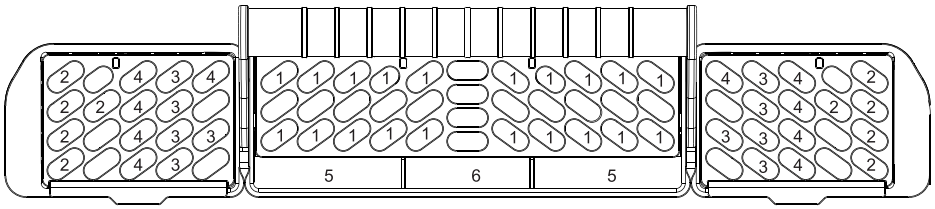

10 cubiertos

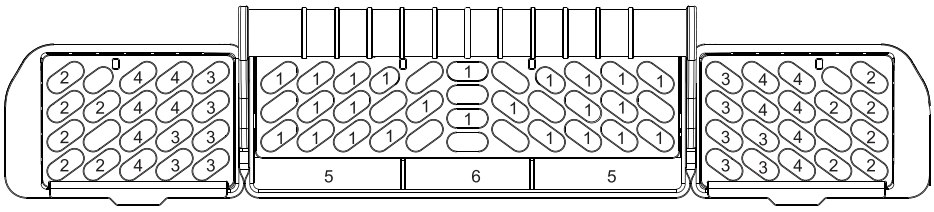

12 cubiertos

Adding a dish

CAUTION

TO AVOID BURN INJURY: Open the door slowly and wait until the spray arms and wash action stop. Hot water may splash out of dishwasher. Failure to do so may result in injury.

Before adding dishes, refer to "Preparing and loading dishes" on page 12 for instructions on loading more dishes. Also see information on Start/cancel in the "Controls and indicators" section on page 10. To add or remove items after the wash cycle starts:

1. Open the door slightly and wait a few seconds until wash action stops before completely opening.
2. Add the item.
3. Press **START/CANCEL** on the control pad and close the door within four seconds. The cycle automatically resumes.

USING YOUR DISHWASHER

FILING THE DETERGENT DISPENSER

The detergent dispenser has two detergent cups. The smaller one is for addition to the pre-wash and the larger is for release to the main wash.

1. Use only fresh automatic dishwashing detergent. Other detergents may cause oversudsing.
2. When using automatic dishwashing detergent tablets or packets, use only one tablet or packet, place in the main wash cup and close.
3. Add detergent just before starting cycle.
4. Store detergent in a cool, dry location and discard any that becomes moist or caked.

1. Push the dispenser cover release catch to open the main wash detergen compartment.

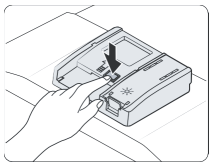

2. Add the recommended amount of detergent to the detergent compartment.

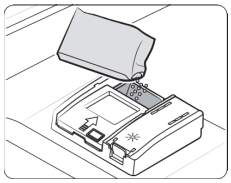

3. Press down on the top of the cover to secure.

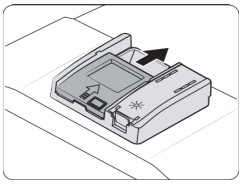

Notes

- The flap is always open at the end of a dishwashing cycle.

HOW MUCH DETERGENT TO USE

The amount of detergent to use depends on the soil level of your load, the type of detergent used and the hardness of your water.

- If you use too little detergent, dishes won't be clean.
- If you have soft water and use too much detergent, glassware will etch.

USING YOUR DISHWASHER

WATER HARDNESS

Water hardness varies depending on your water source. For the best results, your dishwasher is designed to operate with water that has a hardness of no more than 7 grains per gallon. Test kits are available from all major appliance parts retail outlets. If your water has a hardness over 8 grains per gallon, you may consider installing a water softener or regularly use an additive to enhance the performance of your detergent.



CAUTION

The use of industrial grade detergent can damage the heating coil and other parts of the dishwasher leading to damage to the unit and surrounding property. Use only household grade automatic dishwasher detergents.

RINSE AID

Rinse aid greatly improves drying and reduces water spots.. With it water "sheets" off dishes rather than forming water droplets that cling and leave spots.

A dispenser, located next to the detergent cup, automatically releases a measured amount of rinse aid during the last rinse. If spotting and poor drying are problems, increase the amount of rinse aid dispensed by below steps:

1. Open the door when dishwasher is in standby mode.
2. Within 60 seconds after opening the door, press and hold Quick button for more than 5 seconds to enter the set mode. The rinse aid indicator blinks.
3. Press Quick button again to select the proper set according to your using habits, the setting will change in the following sequence: 5→1→2→3→4→5 The higher the number, the more rinse aid the dishwasher uses.
4. Without operation in 5 seconds to complete the setup and exit the setting mode. Under normal conditions, you will need to fill the rinse aid dispenser approximately once a month. Rinse aid is released through an opening in the dispenser. You do not need to wait until the dispenser is empty to refill it. Try to keep it full, but be careful not to overfill it.

USING YOUR DISHWASHER

TO REFILL THE RINSE AID DISPENSER

1. Lift up the end tab of rinse aid cover to open.

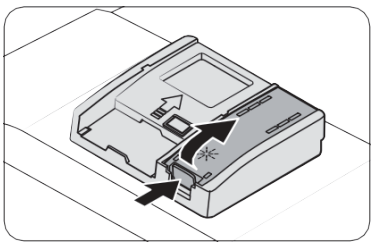

2. Fill the rinse aid dispenser with liquid rinse aid until full. DO NOT overfill.

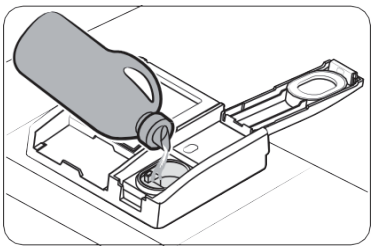

CAUTION

- **Use the viewing port when filling the rinse aid reservoir.**

3. Press the rinse aid cover down firmly to close.

FACTORS AFFECTING PERFORMANCE

USING RINSE AID

Rinse aid greatly improves drying and reduces water spots and filming. Without rinse aid, your dishes and dishwasher interior will have excessive moisture.

In addition, the heated dry option will not perform as well without rinse aid. The rinse aid dispenser, located next to the detergent cup, automatically releases a measured amount of rinse aid during the last rinse.

If spotting and poor drying is a problem, increase the amount of rinse aid dispensed by rotating the dial to a higher number. The dial is located under the dispenser cap.

If the rinse aid is low, the rinse aid light turns on at the beginning and end of the cycle indicating that it is time to refill. Refer to “Filling the rinse aid dispenser” on page 21.

WATER TEMPERATURE

Hot water is required for optimum dishwashing and drying results. Water entering the dishwasher should be at least 120° F (49° C) to achieve satisfactory results.

To check water temperature entering dishwasher:

1. Turn on the hot water faucet near the dishwasher and let it run for several minutes.
2. Hold a thermometer (a candy or meat thermometer will work) in the water stream to check the temperature. If temperature is below 120° F (49° C), have a qualified person raise the hot water heater thermostat setting.

Important

To make sure that the water entering the dishwasher is hot, run hot water from the nearest hot water faucet to clear cool water from the pipe before starting the cycle.

HEAT DRY FUNCTION

The heat dry function, when used with a rinse aid, enhances drying performance. If you do not choose the heat dry function, items in your load that will not be completely dry at the end of the cycle.

WATER PRESSURE

For optimum performance, the hot water supply line for your dishwasher must provide water pressure of at least 20 psi and not more than 120 psi. You may experience low water pressure during high-demand periods, such as when laundry or showers are in use while you are washing the dishes. To eliminate this problem, wait until hot water demand is reduced before starting the dishwasher.

FACTORS AFFECTING PERFORMANCE

CAUTION

TO AVOID BURN INJURY: Allow the heating element to cool before attempting to clean the interior of your dishwasher.

CLEANING THE STAINLESS STEEL PANEL

Clean the stainless steel door and handle regularly with a soft cloth and standard household cleaner to remove the debris

CAUTION

Do not use appliance wax, polish,bleach or products containing chlorine to clean the stainless steel door.

CLEANING THE CONTROL PANEL

Clean the control panel gently with a soft, lightly dampened cloth.

CLEANING THE STAINLESS STEEL INNER DOOR AND TUB

The tub is made of stainless steel. It will not rust or corrode, even if the dishwasher should be scratched or dented.

Clean the spots on the steel inner door and tub with a damp non-abrasive cloth.

CLEANING THE FILTERS

The filters are designed to collect debris and need to be cleaned monthly to maximize wash performance.

1 Remove the bottom rack.

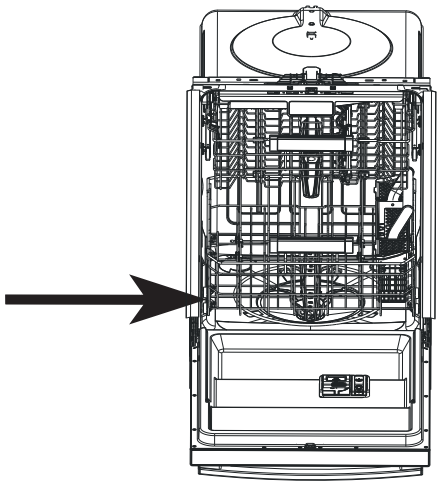

FACTORS AFFECTING PERFORMANCE

2 Rotate the cylinder filter, then lift it out.

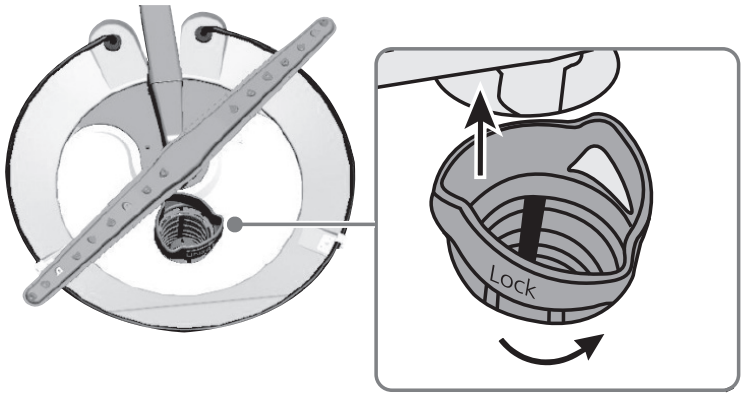

3 Lift the fine filter from the bottom of the tub

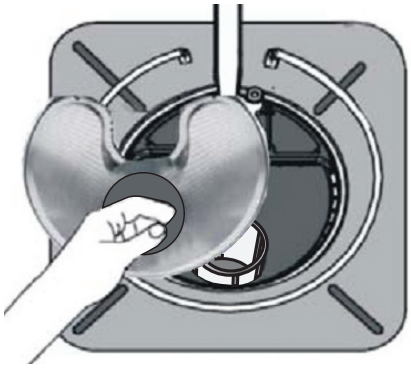

4 Take out the fabric filter

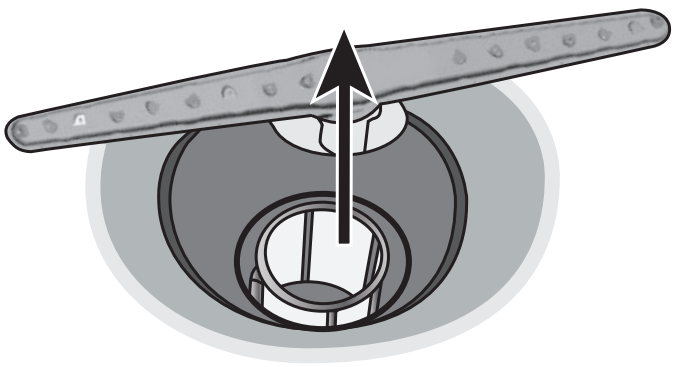

FACTORS AFFECTING PERFORMANCE

5 Flush the filters by holding them under running water.



6 Replace the fabric filter.
7 Replace the fine filter.
8 Replace the cylinder filter.
9 Replace the bottom rack.

CLEANING THE DOOR AND TUB GASKETS

Clean the door gasket with a damp cloth to remove food particles regularly.

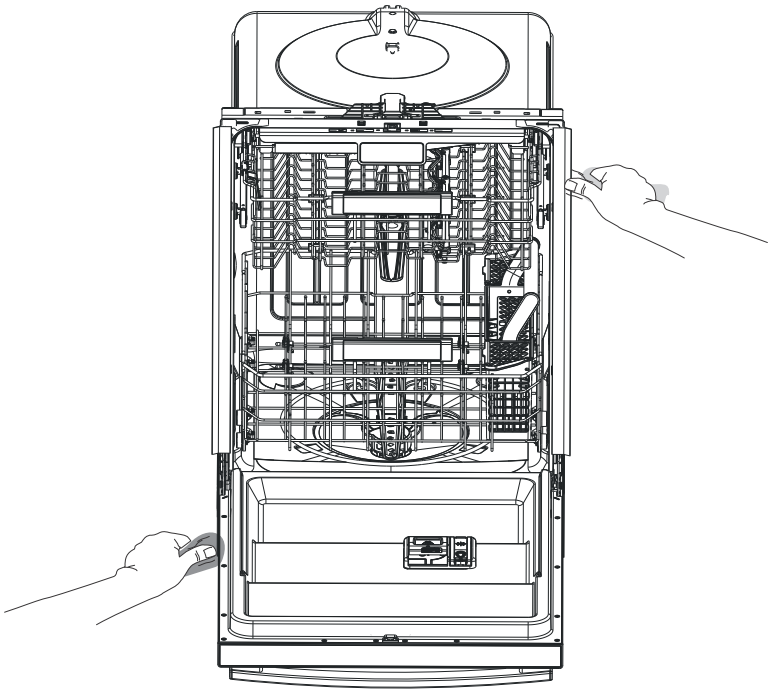

FACTORS AFFECTING PERFORMANCE

The inside of the dishwasher is self-cleaning under normal use. If needed, the tub gasket can be cleaned with a damp cloth. Use a brush to clean the opening in the end of the gasket.

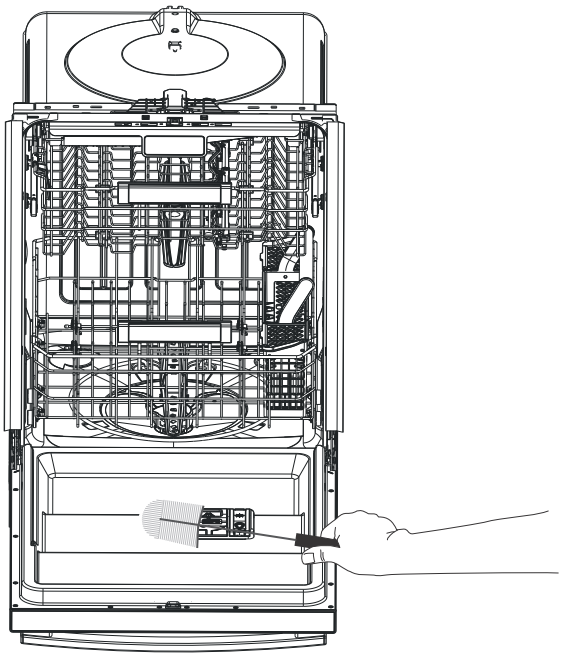

CLEANING THE AIR GAP

If there is an air gap installed with your dishwasher, make sure it is clean so the dishwasher will drain properly. Air gap is not part of your dishwasher. Before you clean the air gap, turn off the dishwasher, then remove the plastic air gap cover and clean with a toothpick.

PROTECTING YOUR DISHWASHER FOR LONG PERIODS

Your dishwasher should be protected from freezing if you plan to leave it for extended periods in an unheated place. Have a qualified person do the following:

To disconnect service:

1. Turn off the electrical power to the dishwasher at the supply source by moving fuses or tripping circuit breaker.
2. Turn off the water supply.
3. Place a pan under the inlet valve, then disconnect water line from the inlet valve and drain it into a pan.
4. Disconnect drain line from pump and drain the water into a pan.

To restore service:

1. Reconnect the water, drain, and electrical power.
2. Turn on water and electrical power supply.
3. Fill the detergent cup and the rinse aid cup and run the dishwasher through a heated-wash cycle.
4. Check all connections to make sure they do not leak.

TROUBLESHOOTING

Refer to this table to correct minor issues before calling for service.

Error codes

CODE	MEANING	POSSIBLE CAUSE
E1	Longer inlet time	• Faucet is not opened • Water intake is restricted • Water pressure is too low
E3	Not reaching required temperature.	Malfunction of heating element.
E4	Overflow	A leak in the dishwasher
E9	A button has been touched for more than 30 seconds (by anything, including water).	Anything (including water) touching a button.
Ed	Failure of communication between main circuit board with display circuit board.	Open circuit or break wiring for the communication

CAUTION

- **If an overflow occurs, turn off the main water supply before calling for service.**
- **If there is water in the base pan because of an overfill or small leak, the water should be removed before restarting the dishwasher.**

PROBLEM	POSSIBLE CAUSE	POSSIBLE SOLUTION
The dishwasher won't start	The door may not be closed properly.	Make sure that the door is closed and latched.
	The power is off or not connected.	Make sure that the power is connected and turned on.
	The delay start option is selected.	Refer to the "Delay" section under “Controls and indicators" on page 11.
	The child lock is activated.	Deactivate the child lock. Refer to the "Child lock" section under "Functions" on page 11.
The dishwasher beeps at the end of the cycle	This is normal and indicates that the wash cycle is complete.	

TROUBLESHOOTING

PROBLEM	POSSIBLE CAUSE	POSSIBLE SOLUTION
The rinse aid light is on	The rinse aid level is low.	Add rinse aid.
The dishwasher runs too long	The dishwasher is connected to a cold water supply.	Make sure that the dishwasher is connected to a hot water supply. If not, change the water supply to a hot water source.
	The cycle time varies, depending on the soil level of the dishes.	When heavy soil is detected, the wash times will be longer.
	Depends on the option selected.	Some options will add time to the cycle.
The dishes are not clean enough	The water pressure is too low.	Make sure that the water pressure is above 20 psi. Use your dishwasher when water demand is low.
	The inlet water temperature is too low.	Make sure that the dishwasher is connected to a hot water supply. If not, change the water supply to a hot water source. Use your dishwasher when hot water demand is low.
	Dishes are too close together.	Reload the dishwasher as shown in "Preparing and loading dishes" on page 12.
	Improper use of detergent.	Add detergent depending on the water hardness and washing cycle you choose. Use fresh detergent.
	The selected cycle is not suitable for the soil level on the dishes.	Choose a different cycle with a longer washing time.
	The spray arms are blocked.	Make sure that the spray arms are not blocked and are free to rotate.
The dishes are not drying enough	The rinse aid dispenser is empty or the setting is too low.	Fill the rinse aid dispenser. Increase the rinse aid setting.
	Dishes are loaded improperly.	Reload the dishwasher as shown in "Preparing and loading dishes" on page 12.
	The cycle you chose did not include drying.	Choose a cycle with drying.

TROUBLESHOOTING

PROBLEM	POSSIBLE CAUSE	POSSIBLE SOLUTION
Spots and filming on dishes	Water hardness is too high	For extremely hard water, install a water softener.
	Dishes are loaded improperly.	Reload the dishwasher as shown in “Preparing and loading dishes” on page 12.
	Old or damp rinse aid power is used.	Use fresh, liquid rinse aid.
	The rinse aid dispenser is empty or the setting is too low.	Fill the rinse aid dispenser. Increase the rinse aid setting.
Etching	Using too much detergent.	Use less detergent if you have soft water.
	The inlet water temperature exceeds 150° F (65.6° C).	Lower the inlet water temperature.
Detergent left in dispenser cup	Detergent may be too old.	Use fresh detergent.
	The spray arm is blocked.	When you load the dishes, make sure that the spray arms are not blocked.
The detergent dispenser will not close	Improper operation of the detergent cover.	Add detergent and rinse aid only as indicated in this manual. See “Filling the detergent dispenser” and “ Filling the rinse aid dispenser” on page 19-21.
Water remains in the dishwasher.	The previous cycle has not finished or has been interrupted	Make sure that the current cycle is finished.
The dishwasher does not drain properly.	The drain is clogged.	Check the air gap (if so equipped). Make sure that the disposer is empty (if so connected).
	The drain hose is kinked.	Make sure that the drain hose is not kinked and is properly connected.
There are black or gray marks on the dishes	Aluminum utensils have rubbed against the dishes.	Make sure that the water inlet temperature is not less than 120° F (49° C).
The interior of the tub is stained	Coffee or tea stains.	Use a spot cleaner to remove the stains.
	Reddish stain.	Some tomato products may cause this. Use of the rinse only cycle right after loading will help this.

TROUBLESHOOTING

PROBLEM	POSSIBLE CAUSE	POSSIBLE SOLUTION
Noises	Detergent cup opening/drain pump.	This is normal.
	A hard object has entered the wash module. When the object is ground up the noise will stop.	If the noise continues after the cycle is complete, call for service.
The dishwasher won't fill (the dishwasher will beep)	The water valve is turned off.	Turn on the water valve.
	The door may not be closed completely.	Make sure that the door is closed and latched.

FORNO®

Alta Qualita

FOR

FAST SUPPORT

EMAIL AT ***INFO@FORNO.CA***



Customer Support: Call 1-866-231-8893 or email: info@forno.ca