P-Trap Installation:

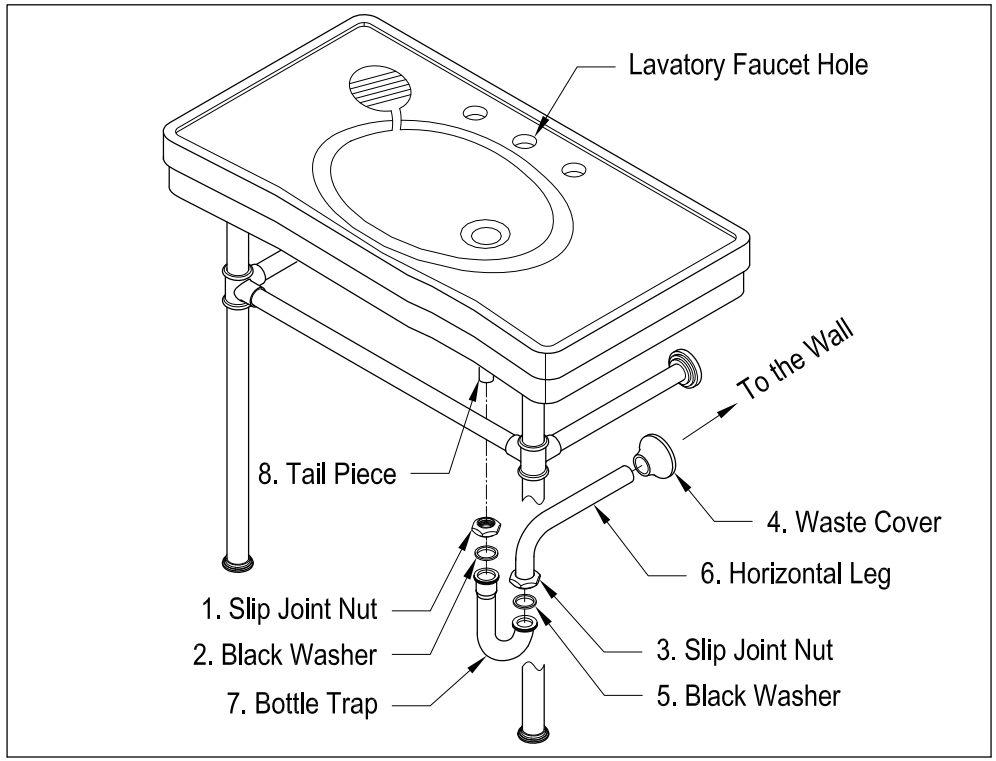

1. Remove horizontal leg and slip joint nut from bottle trap.
2. Apply Teflon tape to all exposed threads.
3. Insert slip joint nut (3) and waste cover (4) onto horizontal leg (6).
4. Insert horizontal leg into wall waste opening, do not tighten.
5. Insert black washer (2) and slip joint nut (1)onto tail piece (8).
6. Attach bottle trap (7) to tail piece and hand tighten slip joint nut (1).
7. Align bottle trap with horizontal leg and tail piece, at this point it may be necessary to cut part of tail piece or part of horizontal leg to obtain proper alignment.
8. After all components have been properly aligned, insert horizontal leg making sure to insert black washer (5) before tightening slip joint nut (3).
9. Thread both slip joint nuts onto bottle trap and tighten along with slip joint securing horizontal leg to wall waste opening.
10. Check for leakage by opening faucet and letting water run for at least 45 seconds.

Cleaning Instructions: Wipe this whole set off with warm water and a soft cloth. Do not use soaps, cleansers, or brass cleaners as they will disintegrate the protective coating and leave the brass exposed therefore causing tarnishing.

FAUCETURE

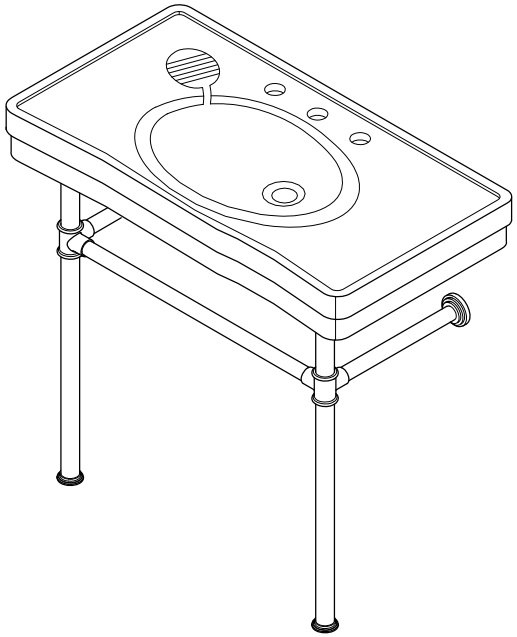

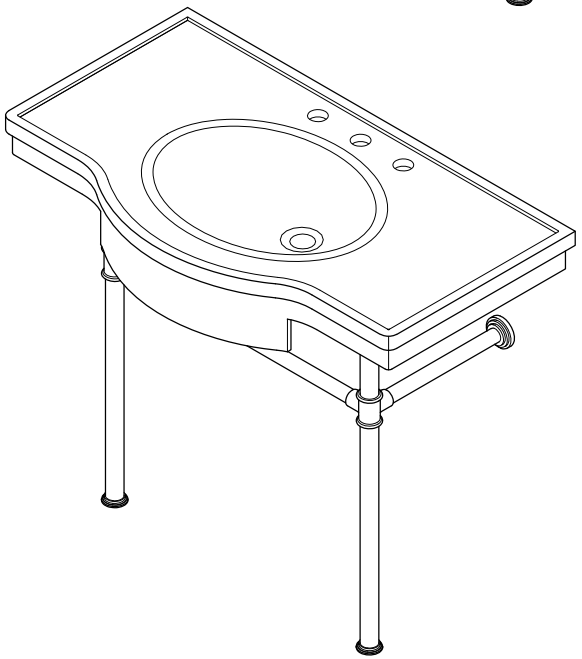

www.kingstonbrass.com
TOLL-FREE CUSTOMER SERVICE: 1-877-2-KBRASS
TECHNICAL SUPPORT E-mail: service@kingstonbrass.com
12775 Reservoir Street, Chino, CA 91710

FAUCETURE
INSTALLATION INSTRUCTIONS
Console Sink Legs

Before Installation :

1. Before beginning the installation of your console pedestal basin, it is important to identify the type of wall where the pedestal will be installed and prepare the installation location accordingly.
2. Install an anchoring brace in the wall prior to installing the drywall, this can be a 2" x 6" piece of wood that will fit between the two studs, then install drywall and finish as usual. Due to the excessive weight of this pedestal it should not be mounted on drywall unless it is properly secured to the anchoring brace.

Installation Step :

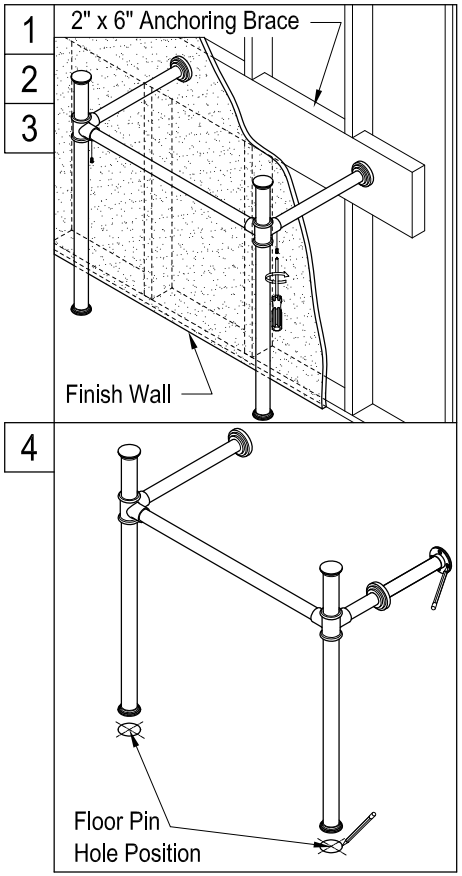

1. Join the two vertical leg supports by inserting the horizontal crossbar into the leg support tees, and secure by tightening screw from underneath.
2. Insert the two horizontal short arms (wall support arm) into the leg support tees, and secure by tightening screw from underneath.
3. Place the leg support assembly at the location where the console basin will be installed. Adjust to make sure the vertical legs are plumb and horizontal arms are level.
4. Use pencil to mark the locations of drill holes for wall support flanges and floor support flanges. Remove the leg support assembly and drill the holes necessary to install the anchors on the wall and the holes to fit the floor pins.

Need Tools:

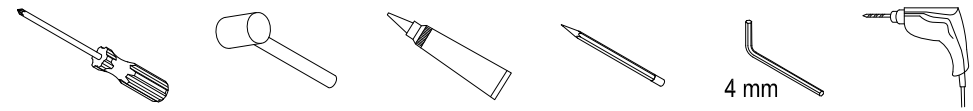

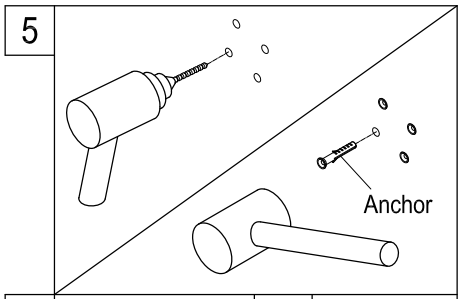

5. Remove the leg support assembly and drill the holes necessary to install the anchors on the wall and drill the holes on floor to fit the floor pins. Install all the anchors on the wall with a hammer.

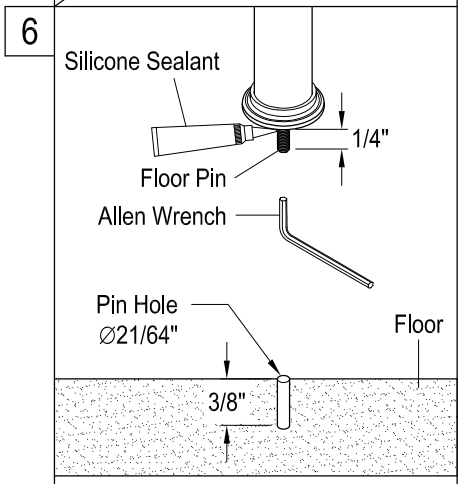

6. Apply silicone sealant on one threaded end of the floor pin, secure it into the bottom of vertical legs with an Allen wrench. Make sure the floor pin protrude 1/4" from the bottom surface.

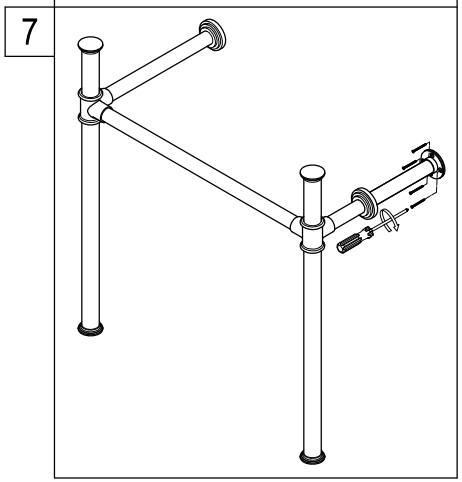

7. Move and adjust the position of the leg support assembly, so the two floor pins can completely go into the drilled holes on the floor. Then secure the leg support assembly to the wall by tightening all the wooden screws on the wall flanges of the short arms.

©2021-02-TD Kingston Brass

FAUCETURE
INSTALLATION INSTRUCTIONS
WALL MOUNT BASIN

Before Installation :

1. Before beginning the installation of your console pedestal sink, it is important to identify the type of wall where the pedestal will be installed and prepare the installation location accordingly.
2. Install an anchoring brace in the wall prior to installing the drywall, this can be a 2" x 6" piece of wood that will fit between the two studs, then install drywall and finish as usual. Due to the excessive weight of this pedestal it should not be mounted on drywall unless it is properly secured to the anchoring brace.

Installation Step :

1

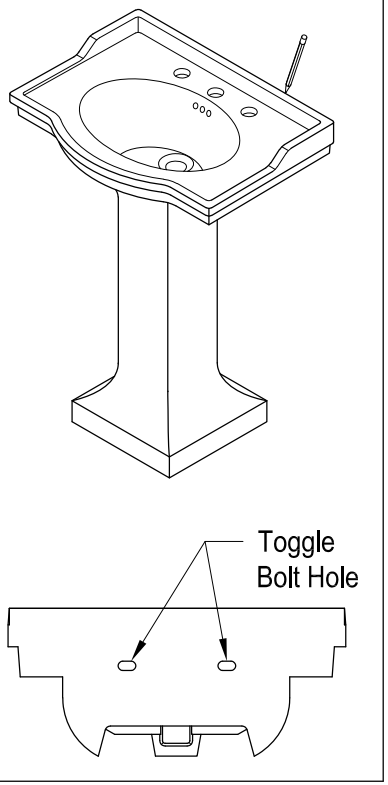

1. Gently place basin on top of pedestal legs and very carefully place in the location where the console will be installed.

Need Tools:

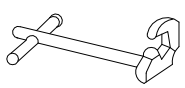
Basin Wrench

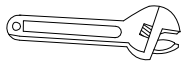
Adjustable Wrench


Drill

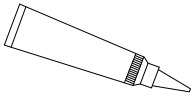
Silicone Sealant

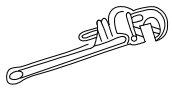
Pipe Wrench

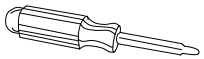
Screwdriver

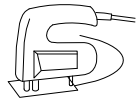
Scroll Saw


Plumber's Putty

2
3

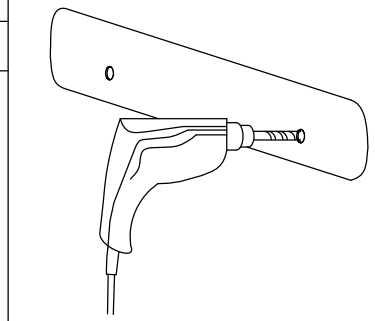

2. Mark the location of the mounting holes on the wall, also mark or measure the location of the pedestal, it is recommended that for additional safety, a piece of 1" x 4" x 23" piece of lumber be preinstalled underneath the console to provide additional support.
3. Remove pedestal, drill holes at the marked locations and install anchors.

4
5
6
7

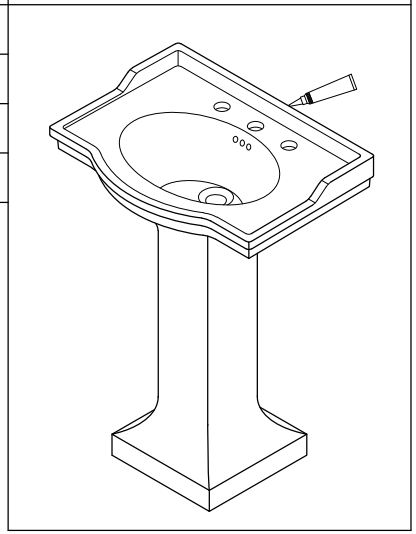

4. Install faucet and drain on console as per faucet manufacturer's instructions.
5. Apply a bead of adhesive caulking around the back perimeter of the basin as well as the top surface of the legs.
6. Place basin on top of pedestal legs and secure using the proper anchors.
7. Attach supply lines and P trap and clean any excess caulking.

© 2020-08-T Kingston Brass

KINGSTON
KITCHEN & BATH

Toggle Bolt Anchor Installation Instructions:

1. If you are installing on a plaster (Drywall) wall we recommend using toggle bolt anchors (included), drill a 5/8” hole at the marked location of the holes
2. Remove toggle from bolt, insert washer on the bolt and insert bolt through the basin mounting holes.
3. Thread no more than 1/2", with the tip of the toggle pointing towards the head of the bolt, apply a bead of silicone caulking around the perimeter of the back of the sink and secure the sink to the wall by inserting the toggle bolt through the holes.
4. Make sure that the bolt went far enough to allow the toggle bolt to open, thread the bolt while pulling on it, this will ensure that the toggle inside the wall will not spin, thread until the basin has been properly secured.

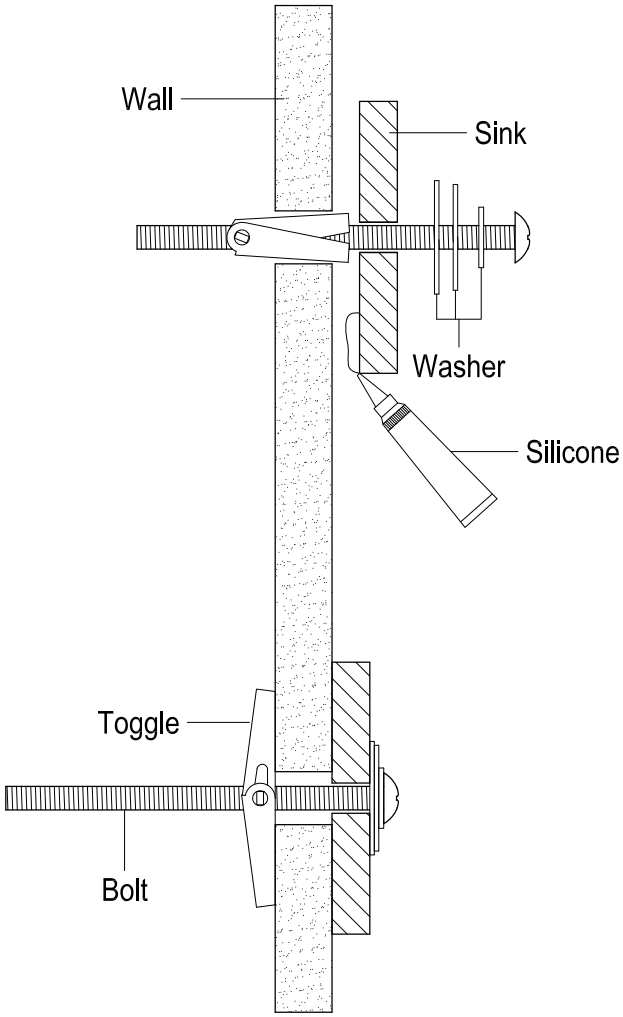

www.kingstonbrass.com
TOLL-FREE CUSTOMER SERVICE: 1-877-2-KBRASS
TECHNICAL SUPPORT E-mail: service@kingstonbrass.com
12775 Reservoir Street, Chino, CA 91710

©2020-08-T Kingston Brass

FAUCETURE

INSTALLATION INSTRUCTIONS

L Shape Mounting Bracket

Need Tools:

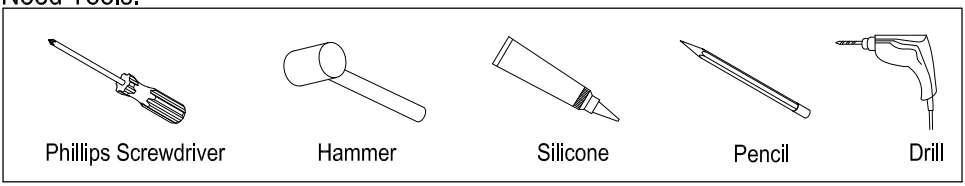

Installation:

1. Once unit has been assembled place at the desired location.
2. Gently place basin on top of pedestal legs and very carefully place in the location where the pedestal legs will be installed and after leveling draw a line across the bottom of the basin.
3. Remove the basin, find the location of the wood studs and using the marked line as a guide to install support brackets at the location of the studs, make sure at least one of the screws is secured to the wood studs.
4. The depth of wall drill hole for installing anchor should be 52mm (2-1/16") Min.
5. Place basin on top of pedestal legs, apply a bead of silicon around the back perimeter of the basin.

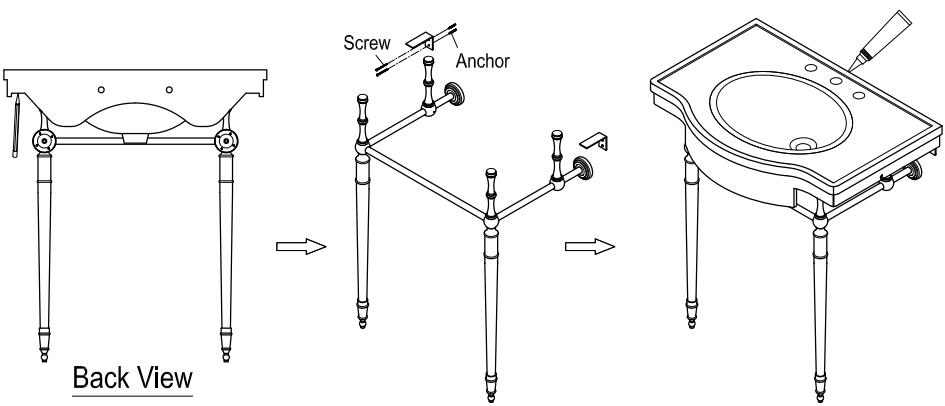

www.kingstonbrass.com
TOLL-FREE CUSTOMER SERVICE: 1-877-2-KBRASS
TECHNICAL SUPPORT E-mail: service@kingstonbrass.com
12775 Reservoir Street, Chino, CA 91710

© 2020-12-D Kingston Brass