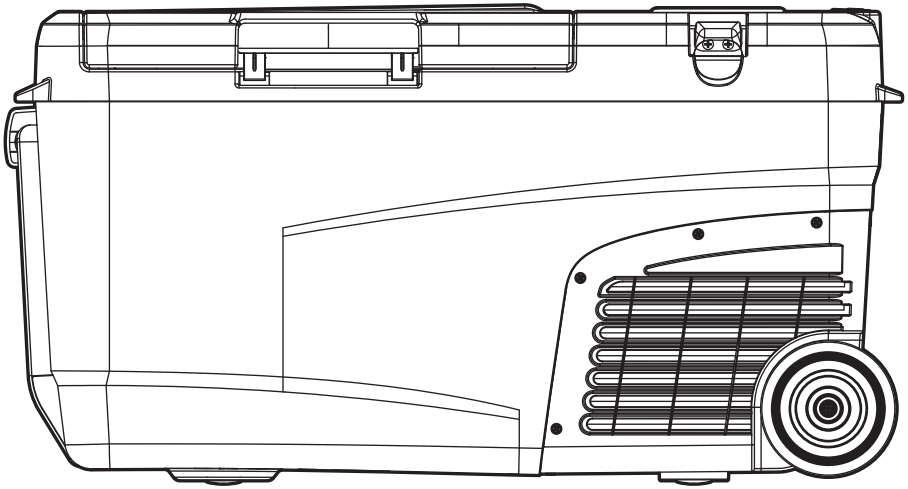

20V Battery Powered & Electric Cooler	**EN**	**P07**
	F	**P15**
	ES	**P24**

HELPLINE NUMBER
NUMÉRO DU SERVICE D'ASSISTANCE
NÚMERO DE LÍNEA DE AYUDA
1-866-354-WORX (9679)

WX876L WX876L.X

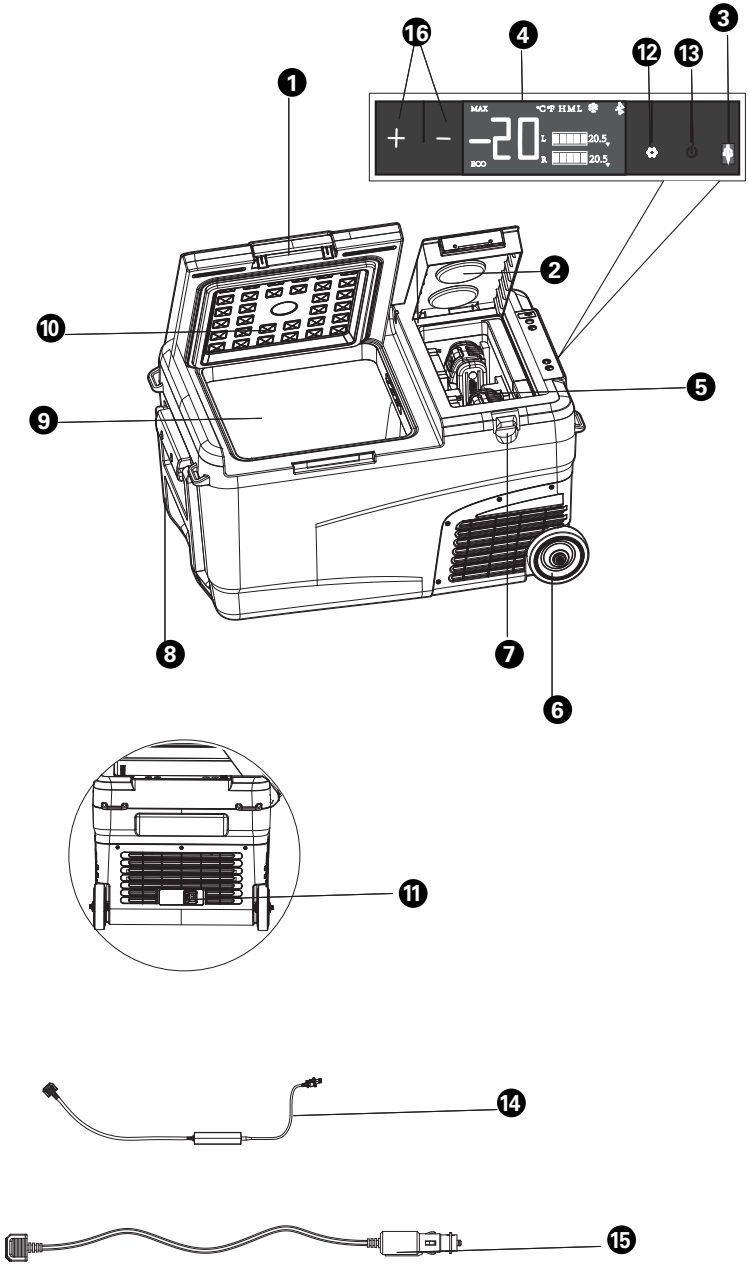

16
4
3
12
13
1
MAX
°C°F HML
-20
L
20.5
R
20.5
ECO
2
10
5
9
8
7
6
11
14
15

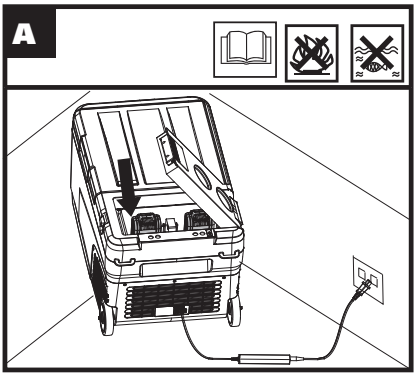
A

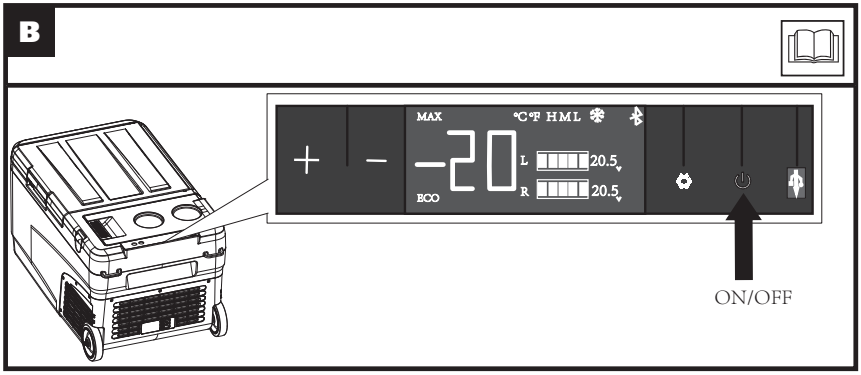
B
MAX
°C°F HML
ECO
L
R
20.5
20.5
ON/OFF

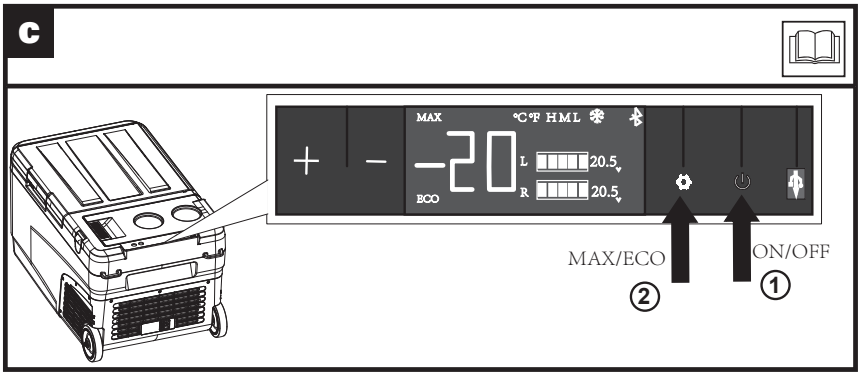
C
MAX
°C°F HML
ECO
L
R
20.5
20.5
MAX/ECO
2
ON/OFF
1

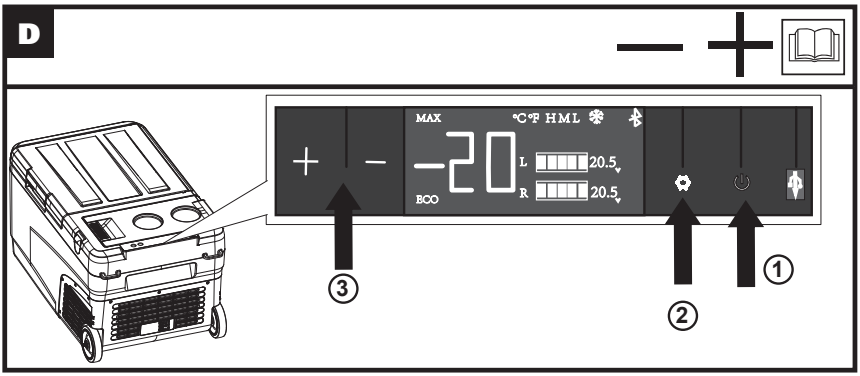
D
MAX
°C °F HML
20
ECO
L
R
20.5
20.5
3
2
1

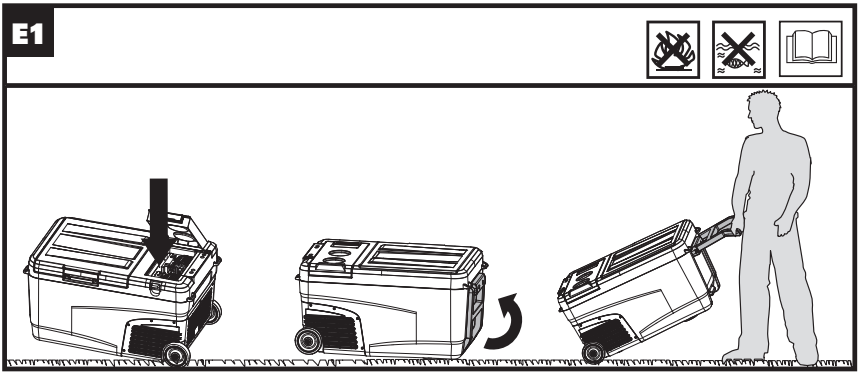
E1

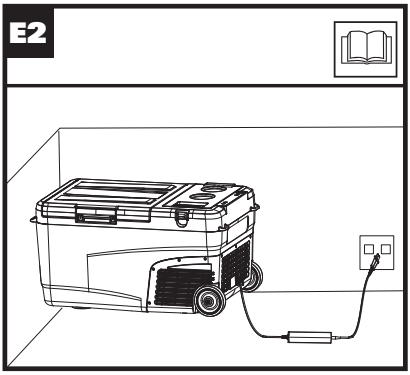
E2

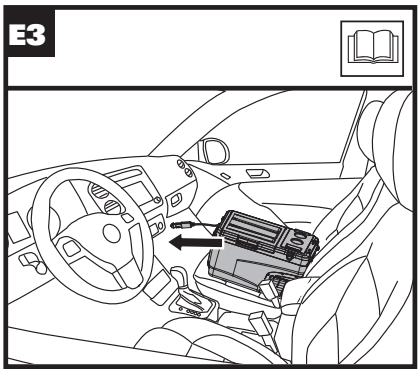
E3

TABLE OF CONTENTS

1. SAFETY INSTRUCTIONS
2. COMPONENT LIST
3. TECHINCAL DATA
4. INTENDED USE
5. OPERATION INSTRUCTIONS
6. CLEANING
7. STORAGE
8. MAINTENANCE
9. TOUBLESHOOTING

1. PRODUCT SAFETY

WARNING: Some dust created by power sanding, sawing, grinding, drilling and other construction activities contains chemicals known to the State of California to cause cancer, birth defects or other reproductive harm. Some examples of these chemicals are:

- Lead from lead-based paints;
- Crystalline silica from bricks and cement and other masonry products;
- Arsenic and chromium from chemically-treated lumber.

Your risk from these exposures varies, depending on how often you do this type of work. To reduce your exposure to these chemicals: work in a well ventilated area, and work with approved safety equipment, such as those dust masks that are specially designed to filter out microscopic particle.

⚠ WARNING: This product can expose you to chemicals including lead and Di(2-ethylhexyl)phthalate (DEHP) which are known to the State of California to cause cancer and birth defects or other reproductive harm. For more information go to www.P65Warnings.ca.gov

GENERAL SAFETY WARNINGS

WARNING: Read all safety warnings and all instructions. *Failure to follow the warnings and instructions may result in electric shock, fire and/or serious injury.*
Save all warnings and instructions for future reference.

1. This appliance is not intended for use by persons (including children) with reduced physical, sensory or mental capabilities, or lack of experience

and knowledge, unless they have been given supervision or instruction concerning use of the appliance by a person responsible for their safety.
2.Children aged from 8 years and above are allowed to use the appliances. Children should be supervised to ensure that they do not play with the appliance. Cleaning and user maintenance shall not be made by children without supervision.
3.The battery must be removed from the socket-outlet before cleaning or maintaining the appliance. The battery is not washable.
4.Check the voltage specification on the type plate corresponds to that of the energy supply. The appliance is only to be used with the power supply unit provided with the applianc

SAFETY WARNINGS TO YOUR CAR REFRIGERATOR

1.Suitable for camping use;
2.The appliance may be connected to more than one source of energy;
3.Do not store explosive substances such as aerosol cans with a flammable propellant in this appliance.
4.WARNING: When positioning the appliance, ensure the supply cord is not trapped or damaged.
5.WARNING: Do not locate multiple portable socket-outlets or portable power supplies at the rear of the appliance
6.WARNING: To avoid a hazard due to instability of the appliance, it must be fixed in accordance with the instructions.
7.To avoid contamination of food, please respect the following instructions:
–Opening the door for long periods can cause a significant increase of the temperature in the compartments of the appliance.
–Clean regularly surfaces that can come in contact with food and accessible drainage systems.
–Store raw meat and fish in suitable containers in the

refrigerator, so that it is not in contact with or drip onto other food.

–If the refrigerating appliance is left empty for long periods, switch off, defrost, clean, dry, and leave the door open to prevent mould developing within the appliance.

8.Only use the accessories that the manufacturer recommended.

9.The refrigerator must be disconnected from the source of electrical supply and remove the battery packs before Repairing and Maintenance.

10.This appliance is suitable for camping useonly when the appliance powered by battery pack.

11. Keep ventilation openings in the appliance clear of obstruction.

12. Do not use mechanical devices or other means to accelerate the defrosting process, other than those recommended by the manufacturer.

13. Do not use electrical appliances inside the food storage compartments of the appliance, unless they are of the type recommended by the manufacturer.

When the power cord or socket is damaged, or any other electrical components are faulty, do not continue to use this product. Send it to the dealer or local special maintenance network for replacement or repair.

14. Do not place the product upside down, or tilt it above 15°.

15. Do not immerse the appliance in water or other liquid to prevent electric shock. Do not expose to rain.

16. When not in use or clean, remove the battery and unplug the power plug.

17. When operating the appliance, the inlet of the power cord and outlet should be kept a certain distance (about 15cm) from other items, so as not to affect the heat dissipation effect of the machine.

18. Any accessories not recommended by the manufacturer may not be used.

19. Do not allow children or the persons with physical disability to operate without any guidance or supervision.
20. Do not place the appliance next to a high-temperature gas or electric stove to avoid accidents.
21. Do not start the power button frequently (at least 5 minutes each time) to avoid damage to the compressor.
22. Do not insert metal foil or other conductive materials into the appliance to prevent fire or short circuit.
23. Do not use chemical washing liquids and hard tools to clean the product.
24. Insert the plug completely into the “DC IN” inlet. Failure to do so may deform the plug or cause a fire.
25. Clean the cigarette lighter socket before inserting the plug. Failure to do so may deform the plug or cause a fire.
26. Do not operate the appliance while driving. Doing so may cause an accident.
27. When the remaining automobile battery capacity gets small, use the appliance with the engine running. After using the appliance, unplug the cigarette lighter socket to prevent the loading on the automobile battery.
28. Do not abuse the AC adaptor and cigarette lighter adaptor.
29. Clean the plug of the AC adaptor and cigarette lighter adaptor. Dirt such as water or salt adhering to the plug may cause rust and result poor conductivity, deformation or fire.
30. Do not touch the plug of the AC adaptor and cigarette lighter adaptor immediately after operation. They may be extremely hot and could burn your skin.
31 Do not disassemble the appliance.
32. Do not charge the car battery while using the appliance.

SAFETY WARNINGS FOR BATTERY PACK

a) Do not dismantle, open or shred battery pack.

b) Do not expose battery pack to heat or fire. Avoid storage in direct sunlight.

c) Do not short-circuit a battery pack. Do not store battery packs haphazardly in a box or drawer where they may short-circuit each other or be short-circuited by other metal objects. When battery pack is not in use, keep it away from other metal objects, like paper clips, coins, keys, nails, screws or other small metal objects, that can make a connection from one terminal to another. Shorting the battery terminals together may cause burns or fire.

d) Do not subject battery pack to mechanical shock.

e) In the event of battery leaking, do not allow the liquid to come in contact with the skin or eyes. If contact has been made, wash the affected area with copious amounts of water and seek medical advice.

f) Do not use any battery pack which is not designed for use with the equipment.

g) Keep battery pack out of the reach of children.

h) Always purchase the battery pack recommended by the device manufacturer for the equipment.

i) Keep battery pack clean and dry.

j) Wipe the battery pack terminals with a clean dry cloth if they become dirty.

k) Battery pack needs to be charged before use. Always use the correct charger and refer to the manufacturer's instructions or equipment manual for proper charging instructions.

l) Do not leave battery pack on prolonged charge when not in use.

m) After extended periods of storage, it may be necessary to charge and discharge the battery pack several times to obtain maximum performance.

n) Recharge only with the charger specified by Worx. Do not use any charger other than that specifically provided for use with the equipment.

o) Retain the original product literature for future reference.

p) Use only the battery pack in the application for which it

was intended.

q) Remove the battery pack from the equipment when not in use.

r) Dispose of properly.

s) Do not mix cells of different manufacture, capacity, size or type within a device.

t) Keep the battery away from microwaves and high pressure

SYMBOLS

	To reduce the risk of injury, user must read instruction manual
	Read operator's manual
	Warning
	Plus, positive polarity
	Minus, negative polarity
	Batteries may enter water cycle if disposed improperly, which can be hazardous for ecosystem. Do not dispose of waste batteries as unsorted municipal waste.
	Do not burn
	Waste electrical products must not be disposed of with household waste. Please recycle where facilities exist. Check with your local authorities or retailer for recycling advice.
	Li-Ion battery. This product has been marked with a symbol relating to 'separate collection' for all battery packs and battery pack. It will then be recycled or dismantled in order to reduce the impact on the environment. Battery packs can be hazardous for the environment and for human health since they contain hazardous substances.
	Warning: Risk of fire / flammable materials
	Adaptor



call2recycle®

POSITEC Inc. has established a partnership with the RBRC Corporation to recycle any Positec batteries with the RBRC-call2recycle seal. For environmental protection, please do not discard batteries in the trash. After the batteries' life cycle is ended, please call 1-800-822-8837 for a free service that will properly dispose of the battery.

2. COMPONENT LIST

1.	**DOOR LATCH**
2.	**CUP HOLDER**
3.	**USB PORT**
4.	**CONTROL PANEL**
5.	**BATTERY PACK COMPARTMENT***
6.	**WHEEL**
7.	**BOTTLE OPENER**
8.	**PULL HANDLE**
9.	**STORAGE BOX**
10.	**SEALING STRIP**
11.	**PORT**
12.	**COOLING MODE**
13	**ON/OFF BUTTON**

14	AC CHARGER
15	CIGARETTE LIGHTER ADAPTOR
16	TEMPERATURE ADJUSTMENT BUTTONS

*** Not all the accessories illustrated or described are included in standard delivery.**

3. TECHNICAL DATA

Type Designation **WX876L WX876L.X (8- designation of machinery, representative of Car Refrigerator)**

	WX876L WX876L.X**
Rated voltage	40 V ⎓ Max. (2x20 V Max.) ***
Charge output voltage	12V
Temperature Range	-4°F to 68°F (-20°C- 20°C)
Power Supply	60W
Machine Weight (Bare tool)	29.8lbs (13.5 kg)

** X may be followed by one or two characters. All models are the same except model number and trademark.The suffix in models may be number from "1" to "999" or English letter "A" to "Z" or "M1" to" M9" which means different package or the various of accessories packed in the package.
*** Voltage measured without workload. Initial battery voltage reaches maximum of 20 volts. Nominal voltage is 18 volts

SUGGESTED BATTERIES AND CHARGERS

Category	Type	Capacity
20V Battery	WA3525	2.0Ah
	WA3575	2.0Ah
	WA3012	4.0Ah
20V Charger	WA3881	2.0A

We recommend that you purchase your accessories from the same store that sold you the tool. Choose the type according to the work you intend to undertake. Refer to the accessory packaging for further details.

Store personnel can assist you and offer advice.

4. INTENDED USE

The cooler is intended to keep food and beverages cool and fresh without the use of ice.

5. OPERATION INSTRUCTIONS

NOTE: Before using the tool, read the instruction book carefully.

ASSEMBLY AND OPERATION

ACTION	FIGURE
BEFORE OPERATION	
Charging the removable batteries. To install the batteries, open the battery compartment. Align the batteries and slip them into place until they click. Connect the cooler to the DC/AC power supply to charge the batteries. You can also charge the batteries with a Worx PowerShare Charger (sold separately.) **Note**: 1.The batteries will charge quicker if the cooler is OFF.	See Fig. A
OPERATION	
Press ON/OFF Button Press the ON/OFF button to turn on the cooler after fully charging the batteries or when connected to a power supply. **Note:** 1. The control panel will turn on for 2 seconds before entering standby mode.	See Fig. B
Setting the Cooling Mode Press the Cooling Mode button to choose the preferred cooling mode. MAX for fast-cooling or ECO for energy saving. **Note:** 1. The default setting is MAX mode.	See Fig. C

Setting the Temperature

Note: Batteries must be installed or cooler connected to power source to change settings

Reset Temperature
Turn the cooler OFF, then press the Cooling Mode button for 3 seconds until E1 is displayed. Long press +- at the same time for 3 seconds to reset.
Note: The minimum temperature setting is -20°C / -4°F

Setting the Temperature
Turn ON the cooler. Use the +- buttons to select desired temperature.
Note: Temperature setting range is -20°C-20°C / -4°F-68°F

Setting the Temperature Unit
Turn the cooler OFF. Long press the Cooling Mode button for 3 seconds until E1 is displayed. Then press the Cooling Mode button again until E5 is shown. Press + or - to select Celsius or Fahrenheit.
Note: Factory default is Celsius/°C

See Fig. D

Usage
The cooler can be used without the batteries if connected to the AC power supply or the cigarette lighter adaptor.
Note:
1. For best cooling results and extended runtime, pre-cool the cooler with the AC power supply or cigarette lighter adaptor. When the cooler has reached desired temperature, install the batteries for portable cooling.

See Fig. E1,E2,E3

BATTERY PROTECTION MODE

In order to prevent the cooler from running down the car battery, the cooler is equipped with BATTERY PROTECTION MODE.

How to select BATTERY PROTECTION MODE:
1. When the cooler is ON, press the Cooling Mode button for 3 seconds until screen flashes, then press the Cooling Mode button again to select protection mode H (high), M (medium, L (low). Default setting is H (high) mode.

INPUT	DC 12V		DC 24V	
	CUT OUT	CUT IN	CUT OUT	CUT IN
H	8.5V	10.9V	21.3V	22.7V
M	10.1V	11.4V	22.3V	23.7V
L	11.1V	12.4V	24.3V	25.7V

Note:
1. It is suggested to select H when connected to car power, while, M or L should be set when it is connected to a portable battery or other back-up battery.

RECOMMENDED TEMPERATURE FOR COMMON FOOD

Common Food	Recommended Temperature
Fruits	5~8° C/41 ~46° F
Vegetable	3~ I0°C/37~50° F
Meat	-I8°C/0° F
Drinks	5°C/41°F
Cold Cuts/ Cheese	4°C/39°F
Wine	I0° C/50° F
Ice cream	-10°C/14° F

6. CLEANING

Clean the cooler by using a wet cloth to wipe out the inside after use.
WARNING:
1. Turn the cooler off and unplug the product before cleaning the cooler.
2. Do not submerge the cooler or rinse it with water.
3. Do not use any abrasive cleaning agents to clean the cooler as these agents may cause damages to the product.

7. STORAGE

Short-time storage
Turn the cooler OFF and unplug the product. Use a dry cloth to clean the inside of the cooler and place it in storage.

Long-time storage
1. Switch off and unplug the device;

2. Empty the storage box and use a dry cloth to wipe the excess water from the cooler;
3. Put the cooler in a dry place and keep the lid sightly open to avoid odors.
4. Recommended storage environment:ambient temperature: 77°F/ 25°C, ambient humidity:75%.

8. MAINTENANCE

Frost will reduce the cooling capacity. It is suggested to defrost in time to avoid this:

1. Switch off and unplug the device;
2. Empty the storage box;
3. Leave the lid open;
4. Wipe off the defrosted water with a soft cloth.

WARNING: Never use the hard or sharp tools to break the ice or remove any objects which have frozen in place.

FOR BATTERY TOOLS

The ambient temperature range for tool and battery use and storage is 0°C-45°C.
The recommended ambient temperature range for the charging system during charging is 0°C-40°C.

9. TOUBLESHOOTING

Problem	Reasons/Suggestions
Cooler does not work	1. Check if the ON/OFF switch is on; 2. Check if connected to a power source or batteries are installed; 3. Check if the fuse is burnt; 4. Ensure power supply is functioning correctly; 5. Do not switch on/off the cooler frequently as it may cause start delay of the compressor.
Objects are frozen in the cooler	The temperature is set too low
Cooler storage box is abnormally warm	1. The cooler has stored a large amount of warm or hot food recently; 2. The cooler lid is opened frequently; 3. The cooler has been cut off power for a long time
Water flow noise from the cooler inside	This is normal and comes from the compressor inside.
Water drops around the cooler lid	It is normal that the moisture will condense to water when it touches a cold surface of the cooler
The compressor is slightly noisy when running	No need to worry because the noise will be reduced after the compressor is stably running.
Code F1 shown	Possible reasons: low voltage Adjust the battery protection mode from High to Medium or from Medium to Low
Code F2 shown	Possible reasons:condenser fan is overloaded Cut the power off for five minutes and re-start If the code shows again, please contact manufacturer for help.
Code F3 shown	Possible reasons: the compressor is starting too frequently. Cut the power off for five minutes and re-start If the code shows again, please contact manufacturer for help.
Code F4 shown	Possible reasons: compressor not kicking in Cut the power off for five minutes and re-start If the code shows again, please contact manufacturer for help.
Code F5 shown	Possible reasons: overheating of the compressor & electronics. Cut the power off for five minutes and re-start If the code shows again, please contact manufacturer for help.
Code F6 shown	Possible reasons: no parameter can be detected by the controller. Cut the power off for five minutes and re-start If the code shows again, please contact manufacturer for help.
Code F7 shown	Possible reasons: temperature sensor is faulty. Contact manufacturer for help.

Code FA shown	Possible reasons: Compressor module failure Contact manufacturer for help.
Code Fb shown	Possible reasons: Compressor module failure Contact manufacturer for help.
Code FC shown	Possible reasons:Low battery voltage or faulty battery pack Please use the battery pack after charging. If you cannot solve the problem, please contact manufacturer for help
Code C1 shown	Possible reasons: The ambient temperature is too high. Wait for the temperature to drop to recover
Code C2 shown	Possible reasons: The ambient temperature is too high. Wait for the temperature to drop to recover
Code C3 shown	Possible reasons: The ambient temperature is too low. If it does not recover after the temperature rises and restart the machine, please contact manufacturer for help.
Code C4 shown	Possible reasons:Battery pack failure Contact manufacturer for help
Code C5 shown	Possible reasons:Battery pack failure Contact manufacturer for help
Code C6 shown	Possible reasons:Battery pack failure Contact manufacturer for help
Code C7 shown	Possible reasons:Low battery voltage or battery pack failure. Please use the battery pack after charging. If you cannot solve the problem, please contact manufacturer for help.
Code C8 shown	Possible reasons:Battery pack failure Contact manufacturer for help
Code C9 shown	Possible reasons:Battery pack failure Contact manufacturer for help