VISIONAIR™

OWNER'S MANUAL

20" BOX FAN

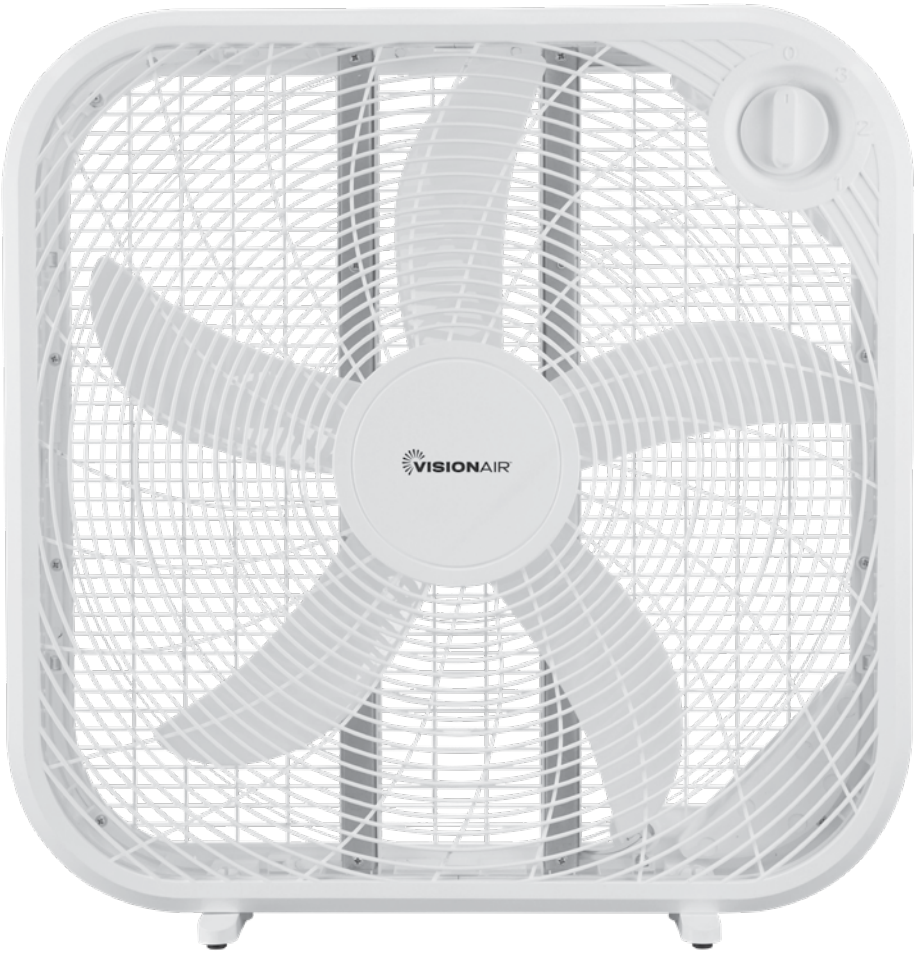

MODEL 2VAFBX20

CONTENTS

INTENDED USE 3
IMPORTANT INSTRUCTIONS 3
ASSEMBLY INSTRUCTIONS 5
USAGE 5
CONTROL PANEL 5
FUSE REPLACEMENT 5
CLEANING AND MAINTENANCE 6
REPAIR 6
STORAGE 6
CONSUMER PRODUCT INFORMATION 7

IMPORTANT NOTE:
Read the manual carefully. Make sure to save this manual for future reference. Illustrations in this manual are for explanatory purposes only, your actual product may look slightly different.

⚠ **WARNING:** Cancer www.P65Warnings.ca.gov

SAFETY INFORMATION

INTENDED USE

This product is intended for indoor residential and office use only, not for industrial or other commercial applications. Use only with electrical wiring that is in good working order and that meets applicable codes and ordinances. If you have any questions whether your wiring is adequate, consult a qualified electrician.

While using your fan, you should follow the IMPORTANT INSTRUCTIONS listed below. As part of those instructions, we have used the word **"WARNING"** to indicate the level of hazard: **WARNING** indicates a hazard which, if not avoided, could result in injury or death.

IMPORTANT INSTRUCTIONS

As with all electrical appliances, basic safety precautions should always be followed to reduce the risk of electric shock, fire, or injury to persons, including the following precautions:

- Read all the instructions before using this fan.
- Use this fan only as described in this manual. Any other use not recommended by the manufacturer may cause electrical shock, fire or injury to persons.
- Do not operate the fan with a damaged power cord or after the fan malfunctions or has been dropped in any manner.
- Use of extreme caution is necessary when any fan is used by or near children, disabled persons or pets and whenever the fan is left operating unattended.
- Do not place the fan on a small, unlevel, uneven or any surface which might allow fan to tip or fall.
- For proper operation, fan should be placed on a smooth, non-combustible, level surface.
- Always unplug fan when not in use, when moving from place to place, when assembling or disassembling parts, and before cleaning.
- The use of attachments, not recommended or sold by the manufacturer, may cause hazards.
- Do not use outdoors.
- Do not use fan in window. Rain may cause electrical hazard (for non-window models).
- Do not operate the fan with blade guards or any safety device removed.
- Avoid the use of extension cords due to risk of fire.
- Do not run power cord under carpeting. Do not cover cord with throw rugs, runners or the like. Arrange cord away from traffic area where it will not be tripped over.
- Do not insert or allow any object to enter any openings on the fan. Doing so may cause electric shock and/or fire hazard. Avoid contact with moving parts.
- This appliance is not intended for use by persons (including children) with reduced physical, sensory or mental capabilities or lack of experience and knowledge, unless they have been given supervision or instruction concerning use of the appliance by a person responsible for their safety.
- Children should be supervised to ensure they do not play with the appliance.

READ & SAVE THESE INSTRUCTIONS!

⚠ WARNING SHOCK HAZARD

Use your fan only in dry environments. This fan is not intended for use in a bathroom, laundry area, or similar locations, or near sinks, washing machines, swimming pools or other sources of water. Never locate fan where it may fall into a bathtub or other water receptacle. Do not use in damp environments such as flooded basements.

⚠ WARNING HOT SURFACES

Do not touch fan motor when in use. This motor is hot when in use, to avoid burns, do not let bare skin touch hot surfaces.

⚠ WARNING FIRE HAZARD

Fans have arcing or sparking parts inside. Do not use near combustible materials or flammable gases or sources of heat. Do not use in areas where gasoline, paint or flammable materials are used or stored. To prevent a possible fire, do not block air intakes or exhaust in any manner. Do not insert or allow foreign objects to enter any ventilation or exhaust opening as this may cause an electric shock, fire, or damage the fan.

⚠ WARNING ELECTRICAL SHOCK HAZARD

Do not use with damaged cord or plug. Use with adequate electrical system that is up to code.

⚠ CAUTION TO PREVENT ELECTRIC SHOCK, this product has a polarized two prong plug (one blade is wider than the other) that must be fully inserted in to a matching properly grounded outlet. This plug is designed to fit a polarized outlet only one way. If the plug does not fit fully into the outlet, reverse the plug. If the plug still does not fit, contact a qualified electrician. Do not attempt to defeat this safety feature.

⚠ WARNING TO REDUCE THE RISK OF FIRE OR ELECTRIC SHOCK, do not use this product with any solid-state speed control device.

DO NOT operate any fan with a damaged cord or plug or after fan malfunctions, has been dropped or damaged in any manner. Do not operate fan with a broken blade, safety cage or any visual imperfections. Disconnect power before servicing. For repairs covered under warranty, see warranty statement. For all other repairs contact Customer Service by telephone for information and assistance.

DO NOT run power cord under carpeting. Do not cover cord with throw rugs, runners or the like. Arrange cord away from traffic area where it will not be tripped over. Avoid the use of extension cords due to risk of fire. Do not use an extension cord unless the plug can be completely inserted into its receptacle. Unplug the fan when not in use. Do not operate fan with its ventilation obstructed.

USAGE AND CONTROL PANEL

ASSEMBLY INSTRUCTIONS

Turn the feet clock/unclock according to arrow to the right place.

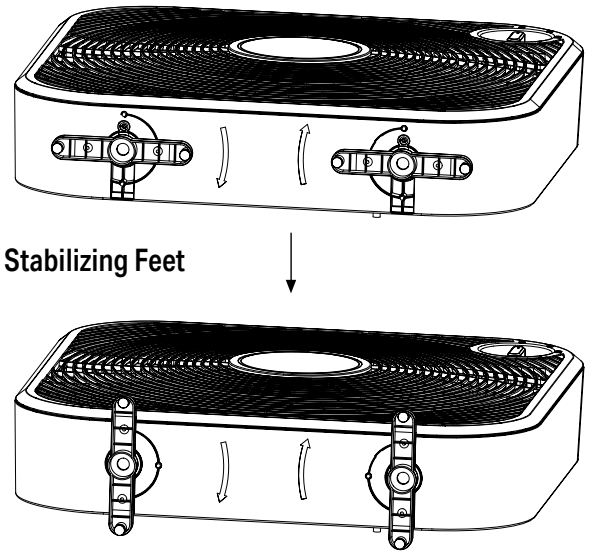

USAGE

FAN OPERATION

Always operate the fan in the upright position following all instructions and recommendations listed in this manual.

FAN LOCATION

Place the fan in the area of the room that will provide proper circulation such as by a window, doorway, or towards the middle of the room.

FAN CONNECTION

Plug fan directly into 120 volt A.C., 60 Hz wall outlet. Be sure plug fits tightly in outlet. A loose connection may cause overheating and damage to the plug or fan. Avoid the use of extension cords due to risk of fire.

NOTE: To prevent overloading a circuit, do not plug the fan into a circuit that is servicing other electrical needs.

CONTROL PANEL

TURNING FAN ON/OFF

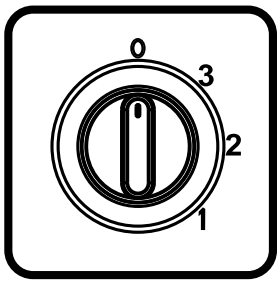

Place fan on stable level surface. Plug fan into properly grounded outlet.

To start the fan, turn rotary dial on Control Panel:

1 - LOW, 2 - MED, 3 - HIGH.

Press 0 - OFF to discontinue use.

Unplug fan when not in use.

FUSE REPLACEMENT

1. Grasp plug and remove from the receptacle or other outlet device. Do not unplug by pulling on cord. **See Fig. 1**
2. Open fuse cover by sliding open fuse access cover on top of attachment plug towards blades. **See Fig. 2**
3. Remove fuse carefully. Use a small tool to pry the end of the fuse from holder cavity. Be careful not to break glass window. **See Fig. 3**
4. Replace fuse.

   ⚠ WARNING Risk of fire.
   Replace fuse only with identical 2.5 or 5.0 Amp, 125 Volt fuse (3.6mm x 10mm). Be sure fuse is properly seated within its cavity.
5. Close fuse cover by sliding it back to its original closed position. **See Fig. 1**

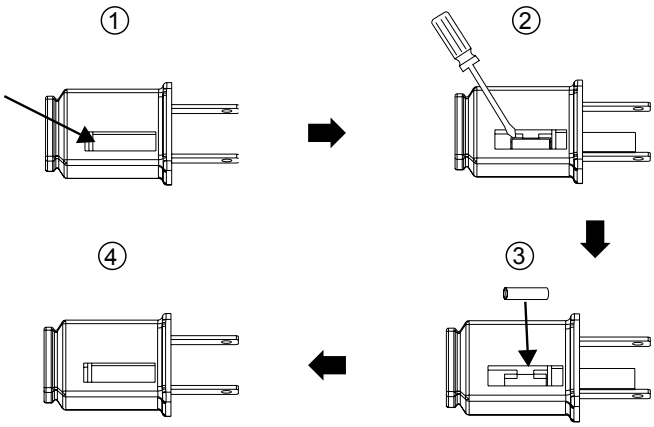

CARE AND MAINTENANCE

CLEANING AND MAINTENANCE

- Always unplug fan before cleaning.
- Clean with a soft, damp cloth. Use a mild soap solution as needed.
- DO NOT ALLOW WATER TO DRIP ONTO THE MOTOR HOUSING, MOTOR, OR ELECTRICAL COMPONENTS.
- Do not use any solvents or harsh chemicals.
- When not using for extended periods, store the fan in a clean, dry location away from dust and debris. It is recommended to store the fan inside its box.

REPAIR

DO NOT OPERATE THE FAN WITHOUT THE GRILLE IN PLACE. DO NOT USE THE FAN IF IT HAS MALFUNCTIONED OR BECOME DAMAGED IN ANY WAY.

STORAGE

Keep original carton for storage of the fan. Coil and tie the power cord to avoid damage during storage.

CONSUMER PRODUCT INFORMATION

For your own records, please attach a copy of your sales receipt to this manual. Also, write the store name/location and date purchased below:

Store Name: _____

Location: _____

Date Purchased:_____

NOTE: Proof of purchase is required for all warranty claims.

NOTE: As a result of continual improvements, the design and specifications of the product within may differ slightly to the unit illustrated on the packaging.

4560 West 160th Street
Cleveland, OH 44135

833-950-1185 | support@visionairproducts.com | **www.visionairproducts.com**

Printed in China | 0924_M145