Model
MWM-0623

OWNER'S MANUAL

Retain This Manual
for Reference

NOTE:
Please read all instructions carefully before using this product.

250614

MARCY POWER HOME GYM WITH INTEGRATED LEG PRESS MWM-0623

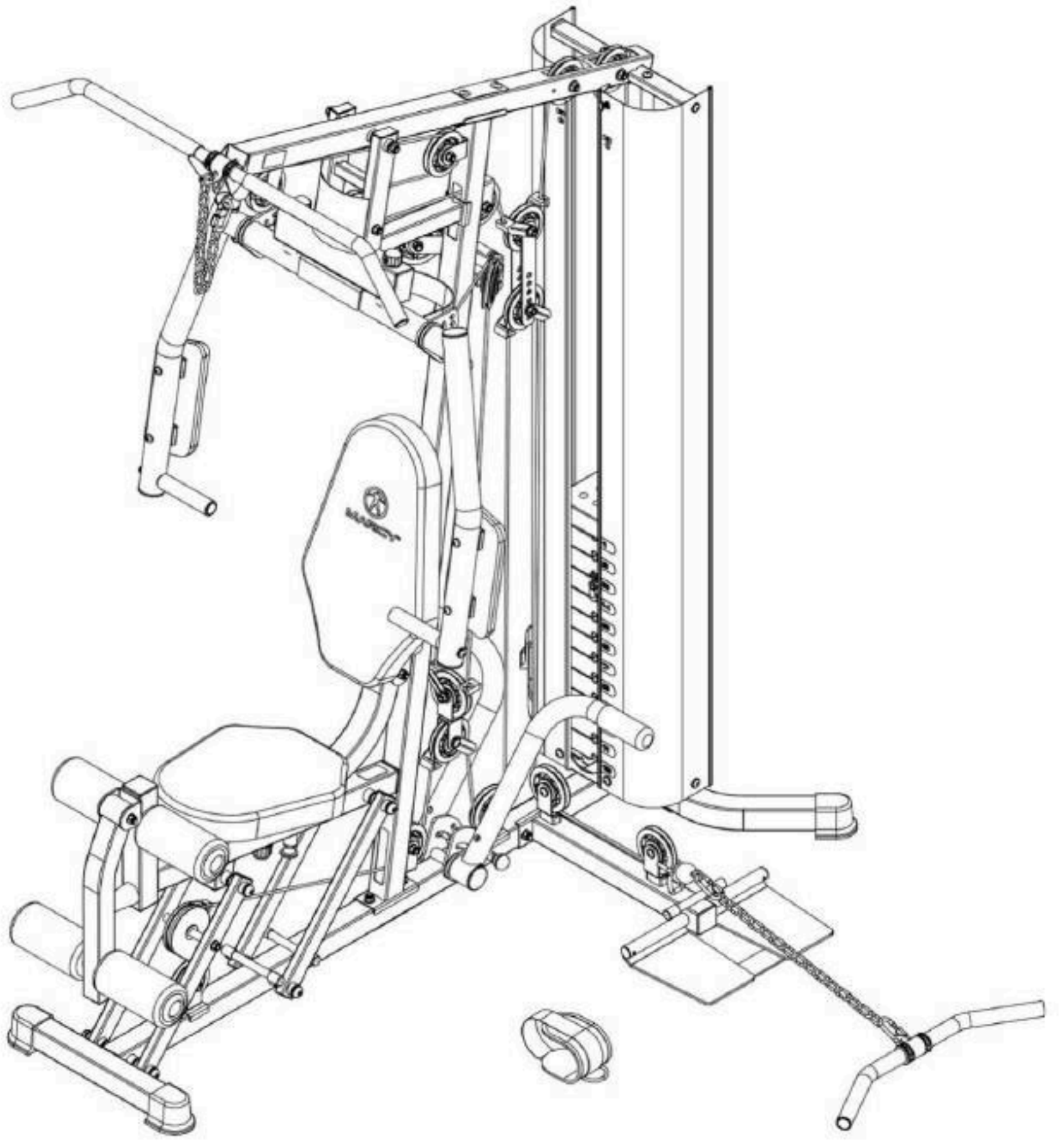

IMPEX® INC.
2801 S. Towne Ave, Pomona, CA 91766
Tel: (800) 999-8899 Fax: (626) 961-9966
www.marcypro.com
support@impex-fitness.com

©IMPEX INC.

BEFORE YOU BEGIN	1
IMPORTANT SAFETY NOTICES	2
EXERCISE GUIDELINES	3
WARNING LABEL PLACEMENT	5
IMPORTANT ASSEMBLY INFORMATION	7
CARE AND MAINTENANCE	8
WEIGHT CAPACITY AND DIMENSIONS	9
PARTS LIST	10
EXPLODED DIAGRAM	14
WEIGHT RESISTANCE CHART	15
COMBINATION LOCK SETUP INSTRUCTION	16
WARRANTY	17
ORDERING PARTS	17

Thank you for selecting the MARCY POWER HOME GYM WITH INTEGRATED LEG PRESS MWM-0623 by IMPEX ® INC. For your safety and benefit, read this manual carefully before using the equipment. As a manufacturer, we are committed to providing you complete customer satisfaction. If you have any questions, or find there are missing or damaged parts, we guarantee you complete satisfaction through direct assistance from our factory. To avoid unnecessary delays, please call our TOLL-FREE customer service number. Our Customer Service Agents will provide immediate assistance to you.

Toll-Free Customer Service Number
1-800-999-8899
Mon. - Fri. 9 a.m. - 5 p.m. PST
www.marcypro.com
support@impex-fitness.com

© IMPEX INC.

IMPORTANT SAFETY NOTICE

This exercise equipment is built for optimum safety. However, certain precautions apply whenever you operate a piece of exercise equipment. Be sure to read the entire manual before you assemble or operate your equipment. In particular, note the following safety precautions:

1. Keep children and pets away from the equipment at all times. DO NOT leave children unattended in the same room with the equipment.
2. Only one person at a time should use the equipment.
3. If the user experiences dizziness, nausea, chest pain, or any other abnormal symptoms, STOP the workout at once. CONSULT A PHYSICIAN IMMEDIATELY.
4. Position the equipment on a clear, leveled surface. DO NOT use the equipment near water or outdoors.
5. Keep hands away from all moving parts.
6. Always wear appropriate workout clothing when exercising. DO NOT wear robes or other clothing that could become caught in the equipment. Running or aerobic shoes are also required when using the equipment.
7. Use the equipment only for its intended use as described in this manual. DO NOT use attachments not recommended by the manufacturer.
8. Do not place any sharp object around the equipment.
9. Disabled person should not use the equipment.
10. Before using the equipment to exercise, always do stretching exercises to properly warm up.
11. Never operate the equipment if the equipment is not functioning properly.
12. A spotter is recommended during exercise.
13. This equipment is designed and intended for home and consumer use only, not for commercial use.

⚠WARNING: BEFORE BEGINNING ANY EXERCISE PROGRAM, CONSULT YOUR PHYSICIAN. THIS IS ESPECIALLY IMPORTANT FOR INDIVIDUALS OVER THE AGE OF 35 OR PERSONS WITH PRE-EXISTING HEALTH PROBLEMS. READ ALL INSTRUCTIONS BEFORE USING ANY FITNESS EQUIPMENT. IMPEX INC. ASSUMES NO RESPONSIBILITY FOR PERSONAL INJURY OR PROPERTY DAMAGE SUSTAINED BY OR THROUGH THE USE OF THIS PRODUCT.

SAVE THESE INSTRUCTIONS.

Building Muscle and Gaining Weight

Unlike aerobic exercise, which emphasizes endurance training, anaerobic exercise focuses on strength training. A gradual weight gain can occur while building the size and strength of muscles. While developing muscle mass, your body adapts to the stress placed upon it. You can modify your diet to include foods such as meat, fish and vegetables. These foods help muscles recover and replenish important nutrients after a strenuous workout.

Muscle Strength and Endurance

To achieve the greatest benefit from exercise, it is important to develop an exercise program that allows you to work all of the major muscle groups equally.

To increase muscles strength; follow this principle:
Increasing resistance and maintaining the number of repetitions of an exercise results in increased muscle strength.

To tone your body, follow the principle: Decreasing resistance plus increasing the number of repetitions of an exercise results in increased body tone.

Once you feel comfortable with an exercise, you can change the resistance, the number of repetitions, or the speed at which you do the exercise. It is not necessary to change all three variables. For example, let's say that you are training at 50 lbs and performing the exercise 10 times in 3 minutes. When this becomes too easy, you may decide to move up lifting 60 lbs for the same number of repetitions in the same amount of time. Lifting more weights fewer times most often develops muscle strength. To gain both muscle strength and endurance, it is recommended that you perform each exercise 15 to 20 reps per set.

Training Intensity

How hard you begin to train depends on your overall level of fitness. The soreness you experienced can be lessened by decreasing the load you place on your muscles and by performing fewer sets. To avoid injury, you should gradually work into an exercise program and set the load to your individual fitness level. The load should increase as your fitness level increases.

Muscle soreness is common, especially when you first start exercising. If you are painfully sore for a long time, it may be time to change your program. Eventually, your muscle system will become accustomed to the stress and strain placed on it.

Beginning a Strength Building Program

Warming Up

To begin strength training, it is important to stretch and perform light exercise for 5 to 10 minutes. This helps prepare the body for more strenuous exercise by increasing circulation, raising your body temperature and developing more oxygen to your muscles.

Workout

Each workout to keep in mind that muscle soreness that lasts for a long period in not desirable and may mean that injury has occurred.

Cool Down

At the end of each workout, perform slow stretching exercises for 5 to 10 minutes. Ease into each stretch only going as far as you can. This stage allows your muscles wind down after training.

To provide a total workout program it is also recommended that 2 to 3 days of aerobic exercise is performed in addition to the strength training.

Drinking Water

For the body to function properly, it must be properly hydrated. If you are exercising, you should increase your fluid intake. The reason for this is that the water you take in will leave your system through the sweating mechanism that cools your body during exercise. The water you lose through exercise must be replaced so that the muscles can recover properly.

Rest Day

Although you may not feel like doing it, taking a rest day at least once a week is important because it gives you body a chance to heal it self. Continuously working your muscle will result in over training which will not benefit in the long run.

©MPEX INC.

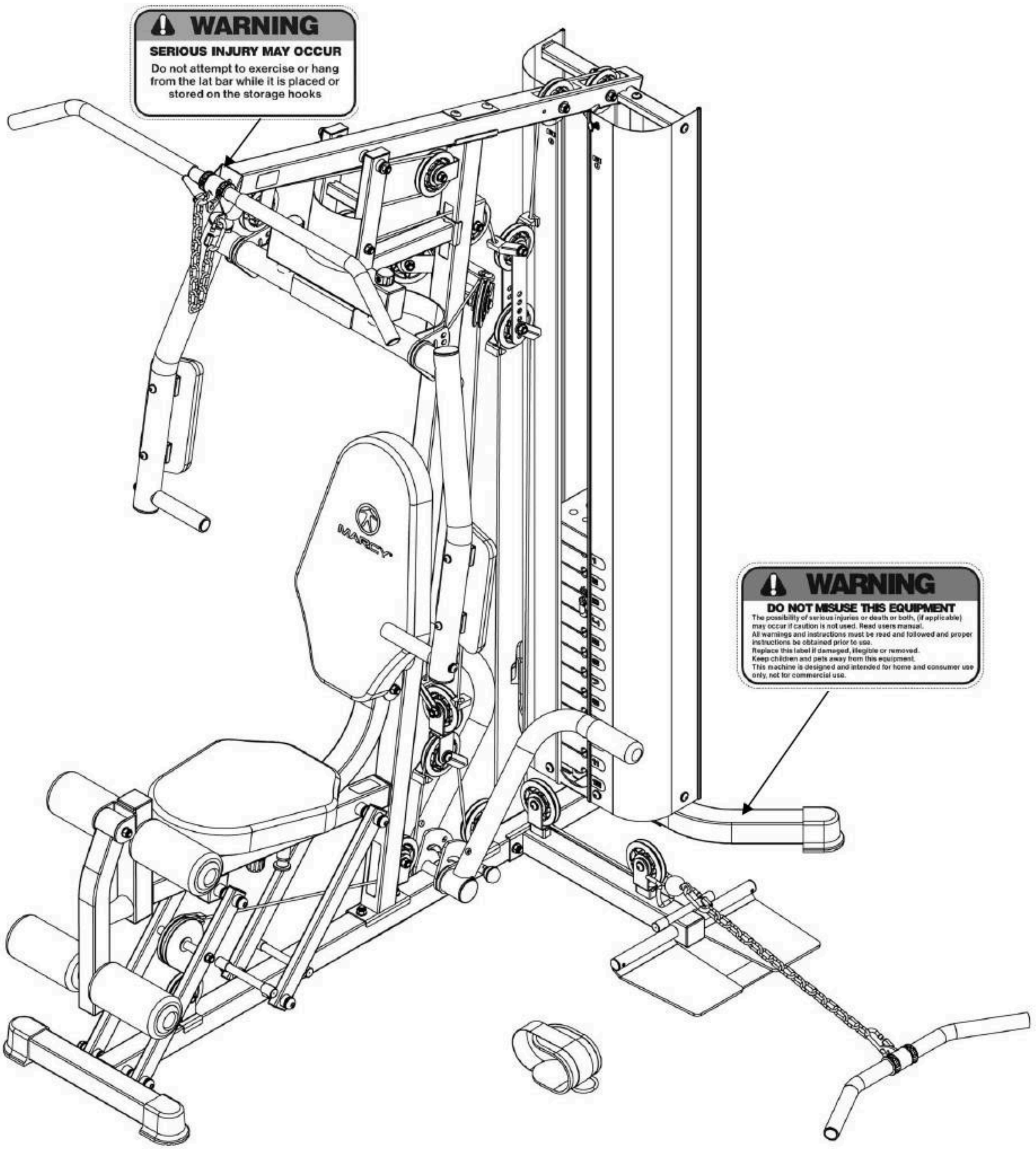

The warning labels shown here have been placed on the Rear Stabilizer and Upper Frame. If the labels are missing or illegible, please call customer service at 1-800-999-8899 for replacements. Apply the labels in the location shown.

FREE AND TRAINING AREA

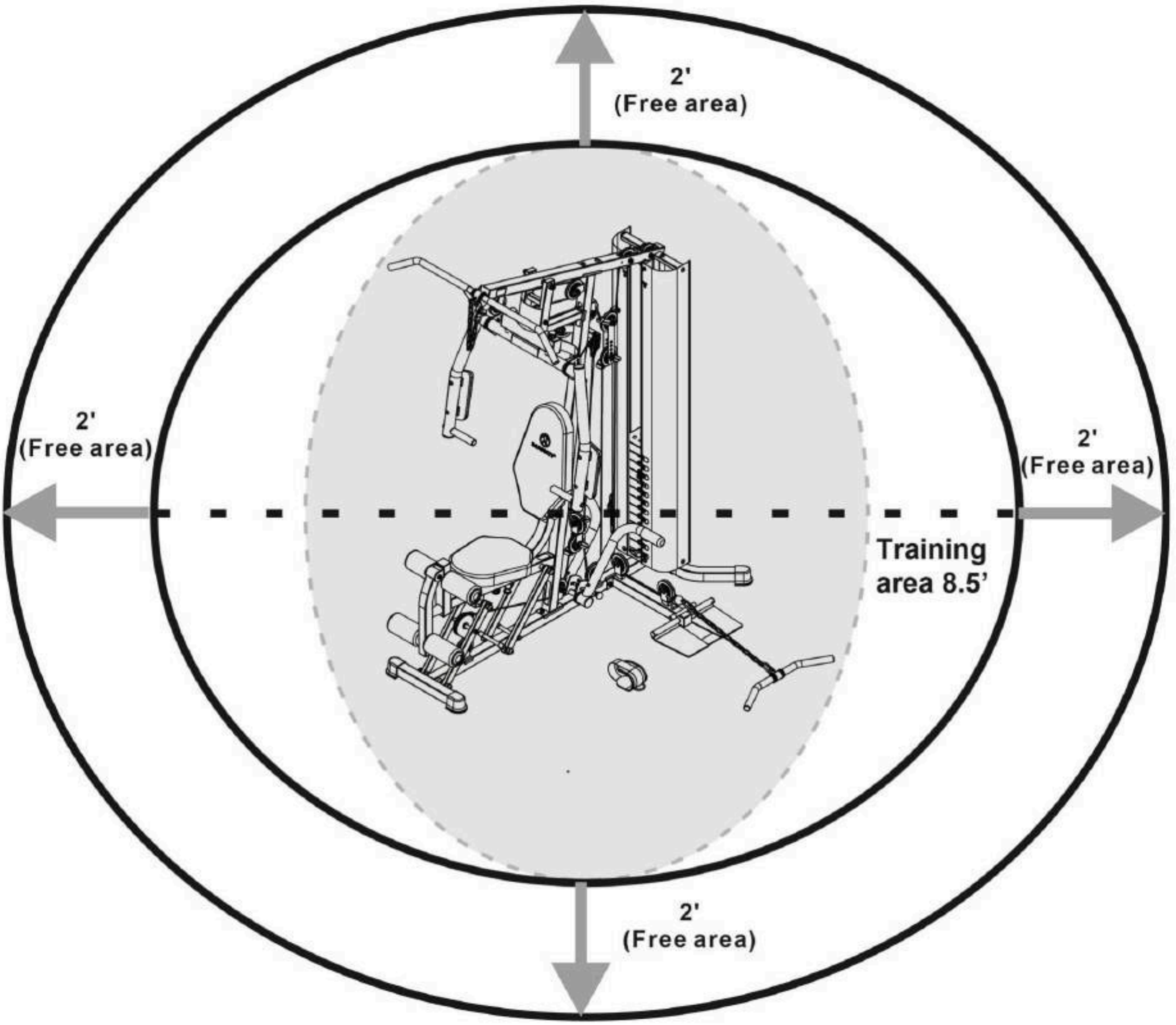

- Tools Required for Assembling the Bench: Two Adjustable Wrenches and Allen Wrenches.
- NOTE: It is strongly recommended that this equipment is assembled by two or more people to avoid possible injury.
- Ensure Carriage Bolts are inserted through the SQUARE holes on components that need to be assembled. Attach washer only to end of the Carriage Bolt.
- Use Allen Bolts or Hex Bolts inserted through the ROUND hole on components that need to be assembled.
- Always wait until all bolts are assembled onto the bench before tightening the bolts. Do not tighten each bolt right after it is installed

Fasten Nuts and Bolts

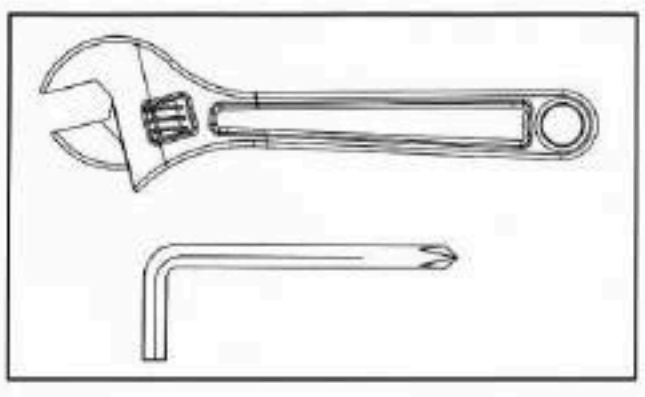

Securely tighten all Nuts and Bolts after all components have been assembled in current and previous steps.
NOTE: Do not over tighten any component with pivoting function.
Make sure all pivoting components are able to move freely.

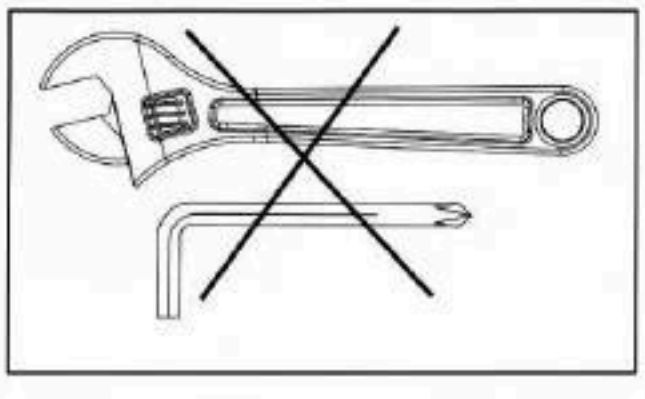

Do not tighten all Nuts and Bolts in this step.

Weight Plate Installation

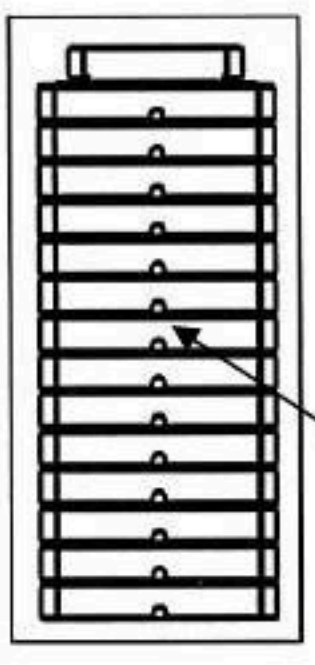

Slide weight plates onto Guide Rod from top to bottom.
The deep groove on each weight plate needs to face front and downwards.

Weight Plate Selection

1. Use the Weight Selector Pin to select the number of weight plates to exercise.
2. Do not insert weight selector pin while the weight stack or top plate is in elevated position.
3. Be certain the weight Selector Pin is completely inserted.
4. Each Weight Plate weights approximately 10lbs.
5. Please refer to Weight Resistance Chart page.
6. Never use dumbbells or other means to increase the weight resistance. Use only weight plates provided by manufacturer.
7. For safety purpose while the equipment is not in use. Insert the Lock Pin into the hole on Guide Rod, and use Combination Lock to lock the Pin to prevent the movement of Weight Plates. Please refer to the Combination Lock set up.

Cable Tension Adjustment

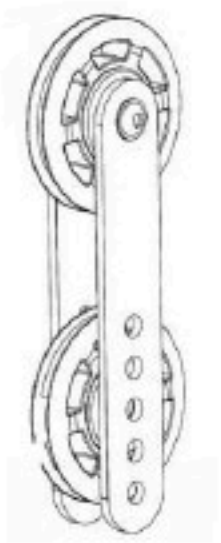

Lower Pulley

Adjust the tension of the Cable System by moving the position of lower Pulley on the two Double Floating Pulley Brackets.

If the tension is too loose, move the lower pulley up by one hole.

If the tension is too tight, move the lower pulley down by one hole.

1. Lubricate moving parts with WD-40 or light oil periodically.
2. Inspect and tighten all parts before using the equipment.
3. The equipment can be cleaned using a damp cloth and mild non-abrasive detergent. DO NOT use solvents.
4. Examine the equipment regularly for signs of damage or wear.
5. Replace any defective components immediately and/or keep the equipment out of use until repair.
6. Failure to examine regularly may affect the safety level of the equipment.

©IMPEX INC.

WEIGHT CAPACITY AND DIMENSION

1. Maximum user weight: 135 kg (300 lb.)
2. Assembled dimensions: 66.8"x43.33"x79.5" (L x W x H)

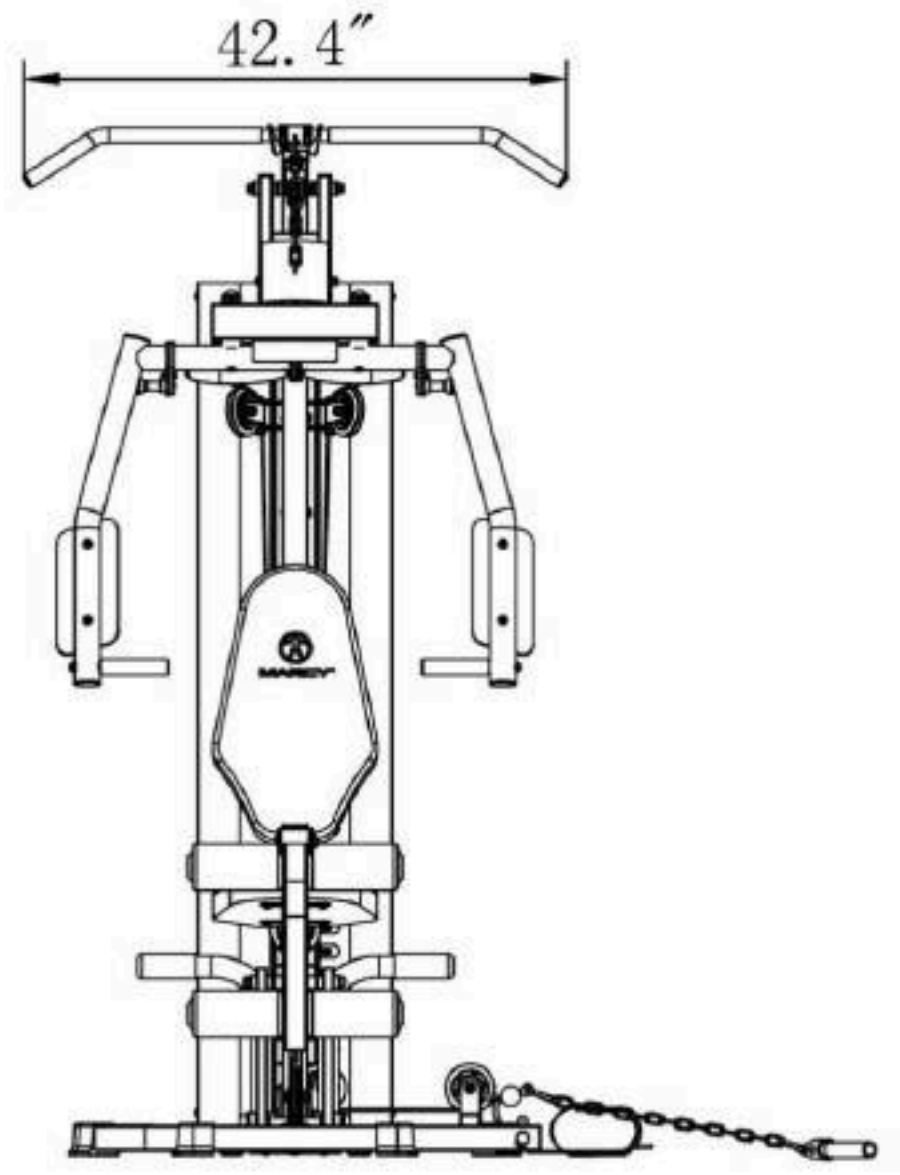

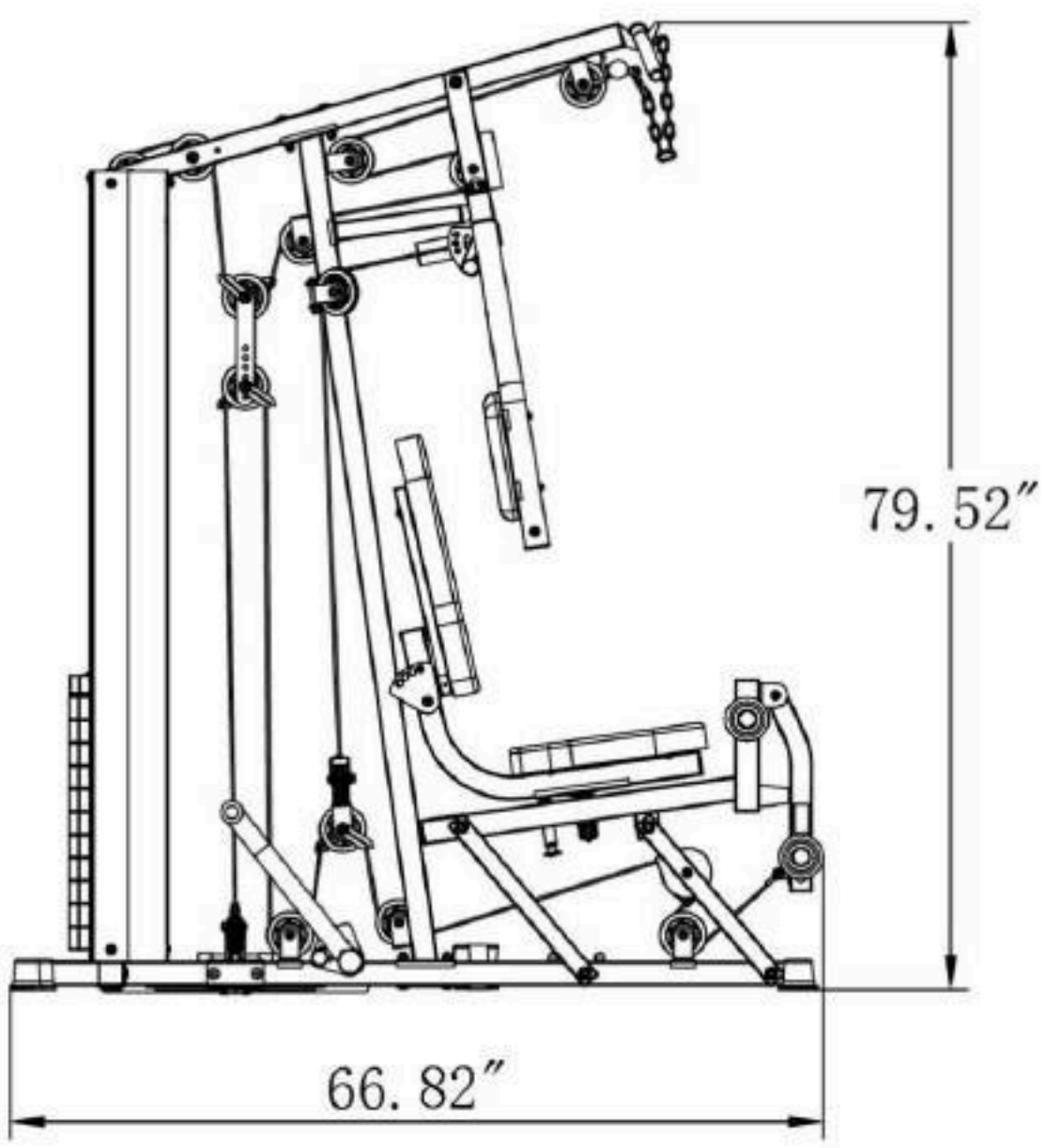

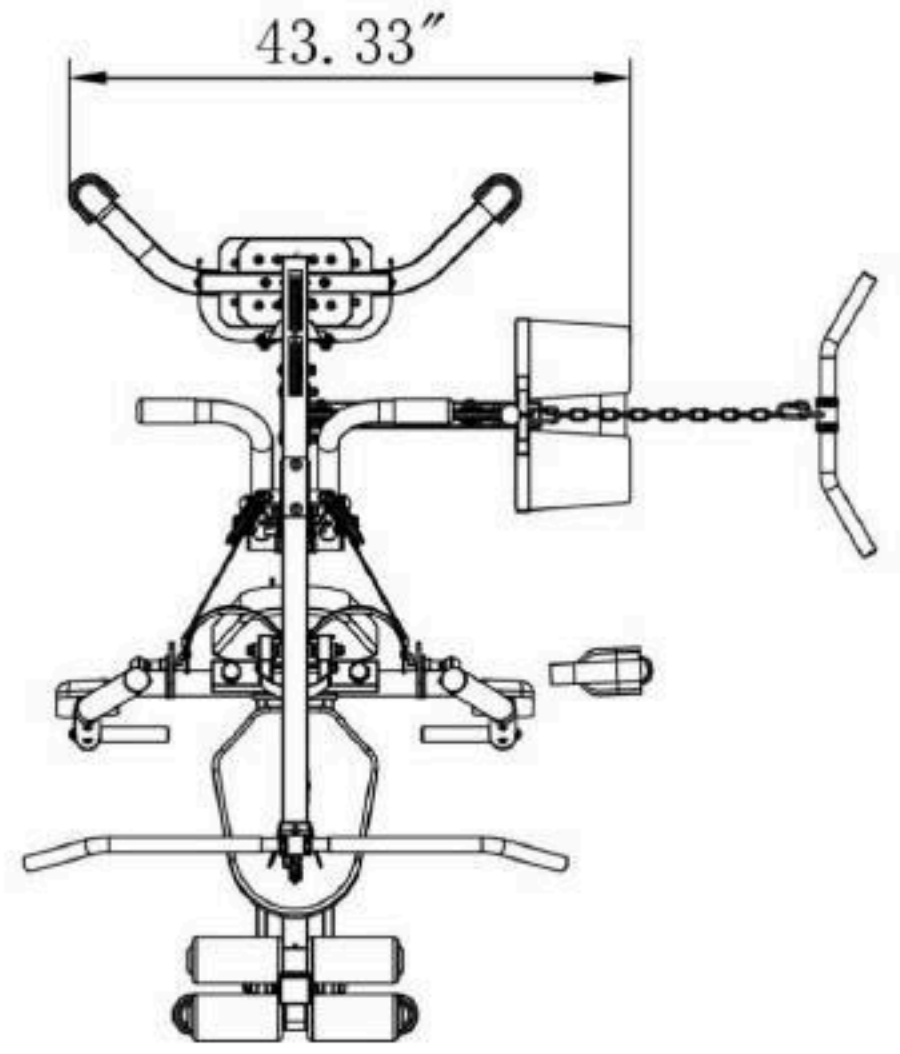

MWM-0623 PARTS LIST

Part #	Description	Size	Qty
1	Base Frame		1
2	Rear Stabilizer		1
3	Vertical Frame		1
4	Upper Frame		1
5	Leg Developer Holder		1
6	Front support swing frame		2
7	Rear support swing frame		2
8	Front Press Handle		2
9	Front Press Base		1
10	Right Butterfly		1
11	Left Butterfly		1
12	Right Butterfly Adjustment Frame		1
13	Left Butterfly Adjustment Frame		1
14	Leg Developer		1
15	Low pull Base Frame		1
16	Foot Plate		1
17	Left Leg Press Frame		1
18	Right Leg Press Frame		1
19	Seat Support Frame		1
20-L	Left Weight Stack Cover		1
20-R	Right Weight Stack Cover		1
21	Backrest Board		1
22	Seat Pad		1
23	Right Butterfly Pad		1
24	Left Butterfly Pad		1
25	Guide Rod		2
26	Lat Bar		1
27	Shiver Bar		1
28	Rotate Ring		2
29	Selector Rod		1
30	Backrest Adjustment Frame		1
31	Angled Double Floating Pulley Bracket		1

32	Swivel Pulley Bracket		2
33	U-shaped Bracket		1
34	Bracket	1 ¾" x 4 ¾"	3
35	Double Floating Pulley Bracket		2
36	Foam Tube		2
37	Foot Plate Tube		1
38	Foam Roll		4
39	Carriage Bolt	M10×2 3/4"	8
40	Allen Bolt	M10×1 1/8"	1
41	Allen Bolt	M10×2 1/2"	4
42	Allen Bolt	M10×1"	9
43	Aircraft Nut	M10	33
44	Washer	·3/4"	65
45	Allen Wrench(tool)	6#	1
46	Allen Wrench(tool)	5#	1
47	Allen Wrench(tool)	8#	1
48	Allen Bolt	M8×3/4"	4
49	Rivet		8
50	Allen Bolt	M10×6 1/8"	1
51	Allen Bolt	M6×1 1/4"	2
52	Allen Bolt	M10×3 1/8"	1
53	Aircraft Nut	M12	4
54	Washer	·5/8"	10
55	Washer	·1"	8
56	Washer	·1"×·3/4"	2
57	Allen Bolt	M10×1 3/4"	10
58	Allen Bolt	M8×2 3/4"	4
59	Allen Bolt	M10× 6 1/2"	1
60	Allen Bolt	M10×2"	4
61	Pulley Bushing	·7/8"×5/8"	4
62	Allen Bolt	M12×7 1/2"	4
63	Washer	·1 1/8"×·3/4"	4
64	Spring Washer	·3/4"	5
65	Lock Ring	3/4"	2
66	Aircraft Nut	M6	4

©MPEX INC.

67	Front Press Axle	·5/8"×7 3/8"×M10	1
68	clip hook	·7	4
69	Ankle Strap		1
70	Chain	15links	1
71	Chain	10links	1
72	Rubber Bumper		2
73	Foam Roll End Cap		4
74	End Cap	·1"	6
75	End Cap	·2"×1.5	4
76	Plastic Washer	·2 1/4"×·1"	3
77	Cable Retainer		8
78	Cable Retainer Bushing		8
79	Lock Ring	M18	1
80	Pulley Cover		2
81	Lock knob		2
81-a	Long lock knob	·5/8"×5 1/8"	2
81-b	Spring	·1×1/2"×3 1/2"	2
81-c	Hexagon drive socket set	M18×1.5	2
81-d	Pin	·1 1/4"×M10×7/8"	2
82	Weight Selector Pin		1
83	Quick Release Lock Pin		4
84	Pulley		17
85	Lower Cable	185"	1
86	Upper Cable	131.5"	1
87	Butterfly Cable	116.1"	1
88	Weight Plate	10LBS	11
89	Selector Stem	8LBS	1
90	Butterfly Axle Bushing		2
91	Long Rubber Bumper		1
92	Rubber sticker		1
93	Allen Bolt	M6×7/8"	2
94	Washer	· 1/2"	2
95	Philips Screw	M6×5/8"	2
96	Allen Bolt	M10×5/8"	8
97	Hex Cap Screw	M6×1/2"	2
98	Rubber Bumper	·1 1/2"×5/8"	1
99	Allen Bolt	M10×4 3/8"	1
100	Rubber Bumper	1 7/8"×2 3/4"	1
101	Rubber Bumper	1 7/8"×1 7/8"	1
102	End Cap	·2"×2.0	3
103	End Cap	·5/8"	6
104	End Cap	·1"	1
105	End Cap	·2"×1.5	4
106	End Cap	·1 3/4"	1
107	End Cap	·2"×2.0	4

108	End Cap	1"×2"	4
109	End Cap	2"×2 3/4"	2
110	Handle Grip	·1 5/8" ×4 1/2"	2
111	Handle Grip	·1"×4 3/4"	2
112	Handle Grip	·1"×20 1/2"	2
113	Handle Grip	·1"×10"	2
114	Weight Cover Edging strip		4
115	Metal Bushing	Ø1" x Ø ½"	24
116	Metal Bushing	Ø1" x Ø·"	6
117	Metal Bushing	Ø1 1/4" x Ø3/4"	4
118	Metal Bushing	Ø1" x Ø3/8"	4
119	Metal Bushing	Ø1 1/2" x Ø1"	2
120	Open wrench	17×19	2
121	Plastic Ring		8
122	Rear Stabilizer End Cap	2"×2"	4
123	Lock Pin		1
123	Combination Lock		1

©MPEX INC.

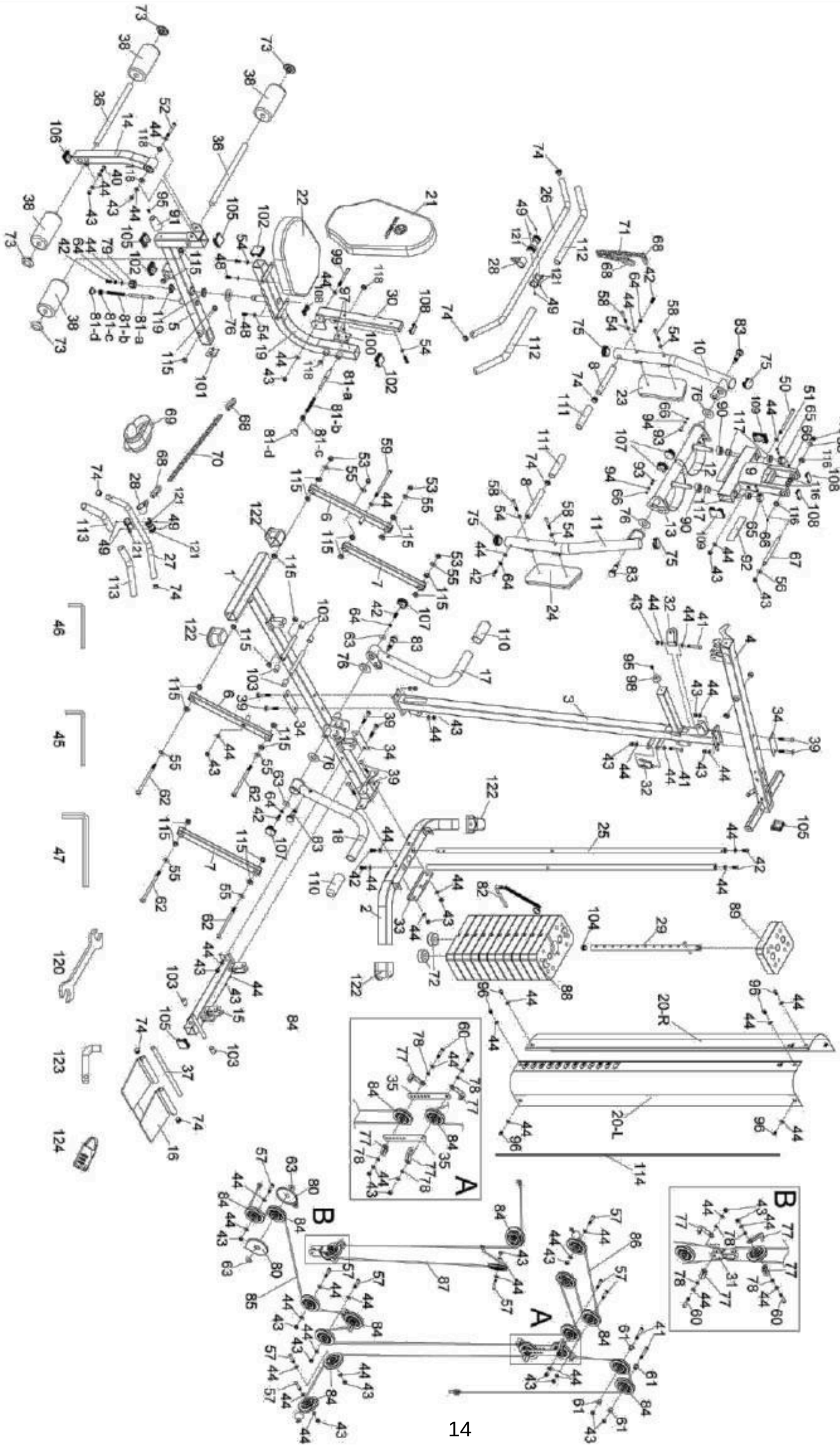

©IMPEX INC.

MWM-0623 WEIGHT RESISTANCE CHART

Weight Plate	Front Press	Back Press	Butterfly/ one side	Lat Pull	Low Pulley	Leg Press
1	13	14	5	10	10	30
2	26	28	10	20	20	60
3	39	42	15	30	30	90
4	52	56	20	40	40	120
5	62	67	25	50	50	150
6	78	84	30	60	60	180
7	91	98	35	70	70	210
8	104	112	40	80	80	240
9	117	126	45	90	90	270
10	130	140	50	100	100	300
11	143	154	55	110	110	330
12	156	168	60	120	120	360

Note: Each plate weights 10 lbs.
Numbers are approximate. Actual weights may vary.
Values for Butterfly are for each arm.

©IMPEX INC.

Combination Lock Set Up Instruction

The Lock is set at the manufacturer to the open at 0-0-0 (all zeros are positioned in the middle).
It is recommended to change the combination to ensure safety.

Please follow the below steps to change the combination:

1. Push and hold the combination adjustment button (#1) as indicated below, while holding down the adjustment button, turn the numerical dial (#2) to set the desired combination in the middle. Release the button (#1). Set the two other numerical dials the same way. This only needs to be done once.
2. To lock, turn the dials so the Lock shows random numbers.
3. To unlock, turn the dials to the combination setup in step one, press the shackle (#3) to open.

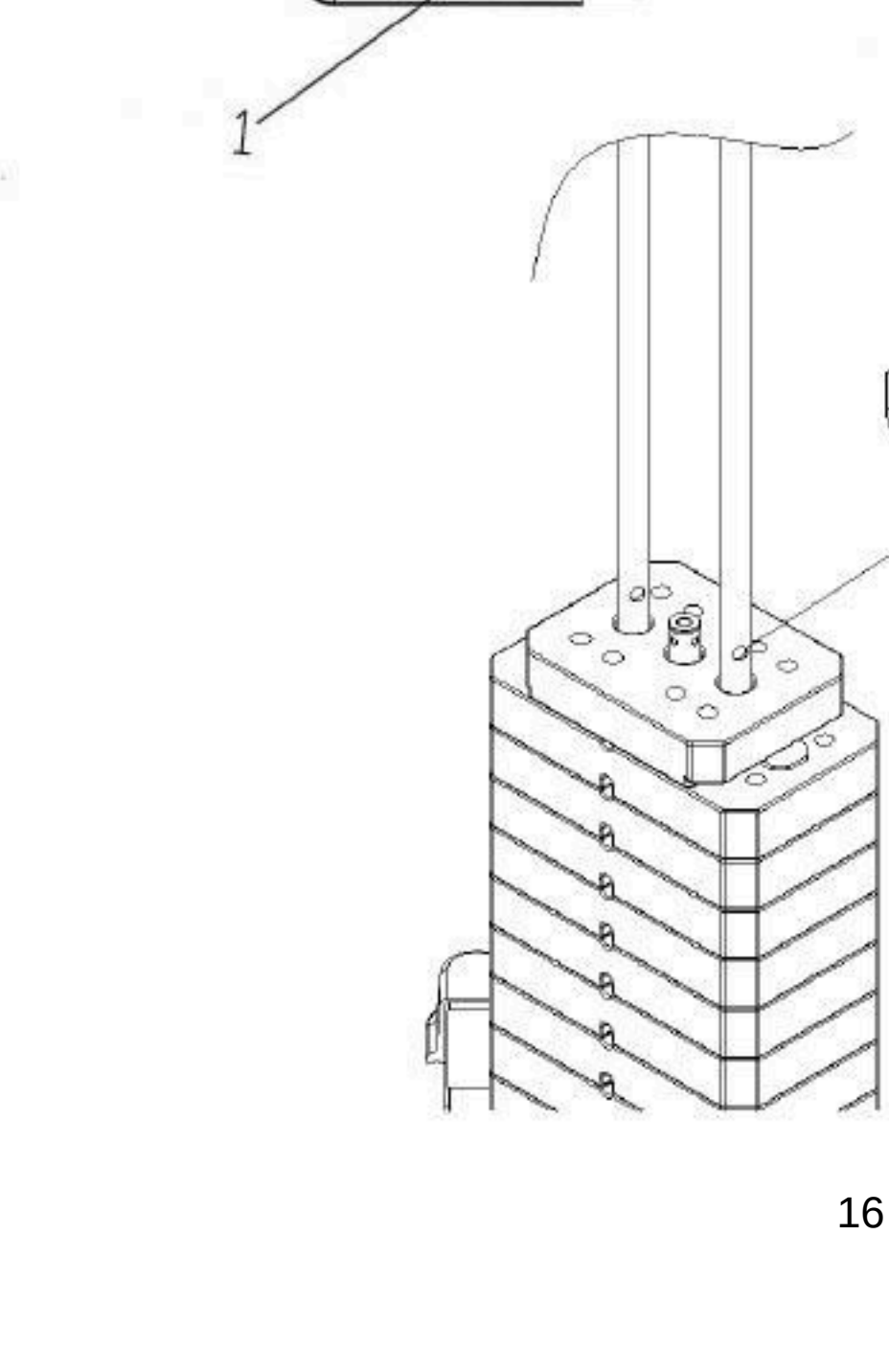

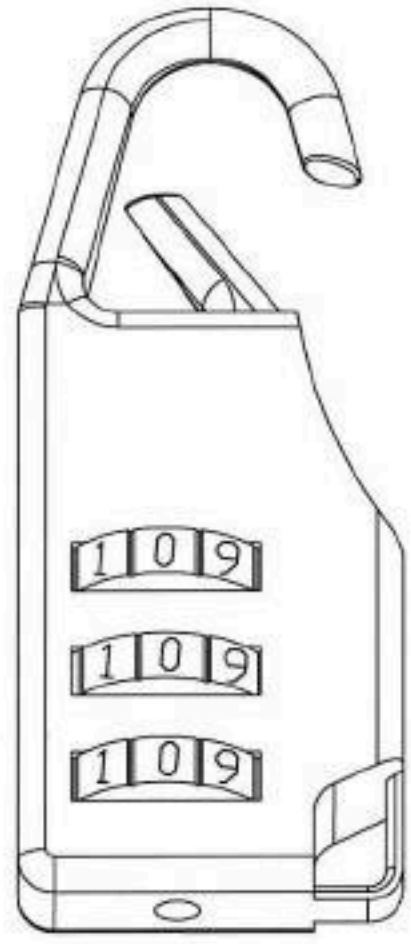

©IMPEX INC.

IMPEX® INC.

LIMITED WARRANTY

IMPEX Inc. ("IMPEX ®") warrants this product to be free from defects in workmanship and material, under normal use and service conditions, for a period of two years on the Frame from the date of purchase. This warranty extends only to the original purchaser. IMPEX's obligation under this Warranty is limited to replacing or repairing, at IMPEX's option.

All returns must be pre-authorized by IMPEX. Pre-authorization may be obtained by calling IMPEX Customer Service Department at 1-800-999-8899. All freights on products returned to IMPEX must be prepaid by the customer. This warranty does not extend to any product or damage to a product caused by or attributable to freight damage, abuse, misuse, improper or abnormal usage or repairs not provided by an IMPEX authorized service center or for products used for commercial or rental purposes. No other warranty beyond that specifically set forth above is authorized by IMPEX.

IMPEX is not responsible or liable for indirect, special or consequential damages arising out of or in connection with the use or performance of the product or other damages with respect to any economic loss, loss of property, loss of revenues or profits, loss of enjoyments or use, costs of removal, installation or other consequential damages or whatsoever natures. Some states do not allow the exclusion or limitation of incidental or consequential damages. Accordingly, the above limitation may not apply to you.

The warranty extended hereunder is in lieu of any and all other warranties and any implied warranties of merchantability or fitness for a particular purpose is limited in its scope and duration to the terms set forth herein. Some states do not allow limitations on how long an implied warranty lasts. Accordingly, the above limitation may not apply to you.

This warranty gives you specific legal right. You may also have other rights which vary from state to state.

Register on-line at www.marcypro.com

IMPEX® INC.
2801 S. Towne Ave.
Pomona, CA 91766

ORDERING REPLACEMENT PARTS

Replacement parts can be ordered by calling our Customer Service Department toll-free at 1-800-999-8899 during our regular business hours: Monday through Friday, 9 am until 5 pm Pacific standard time.

support@impex-fitness.com

When ordering replacement parts, always give the following information.

1. Model
2. Description of Parts
3. Part Number
4. Date of Purchase

©IMPEX INC.

notice-facile.com/notice/2718592/impex+mwm-0623
Impex MWM-0623