Operator's Manual

Quest V-Series Riding Mower

Model—Serial Range

QZV060B0242H00—417930746 and Up

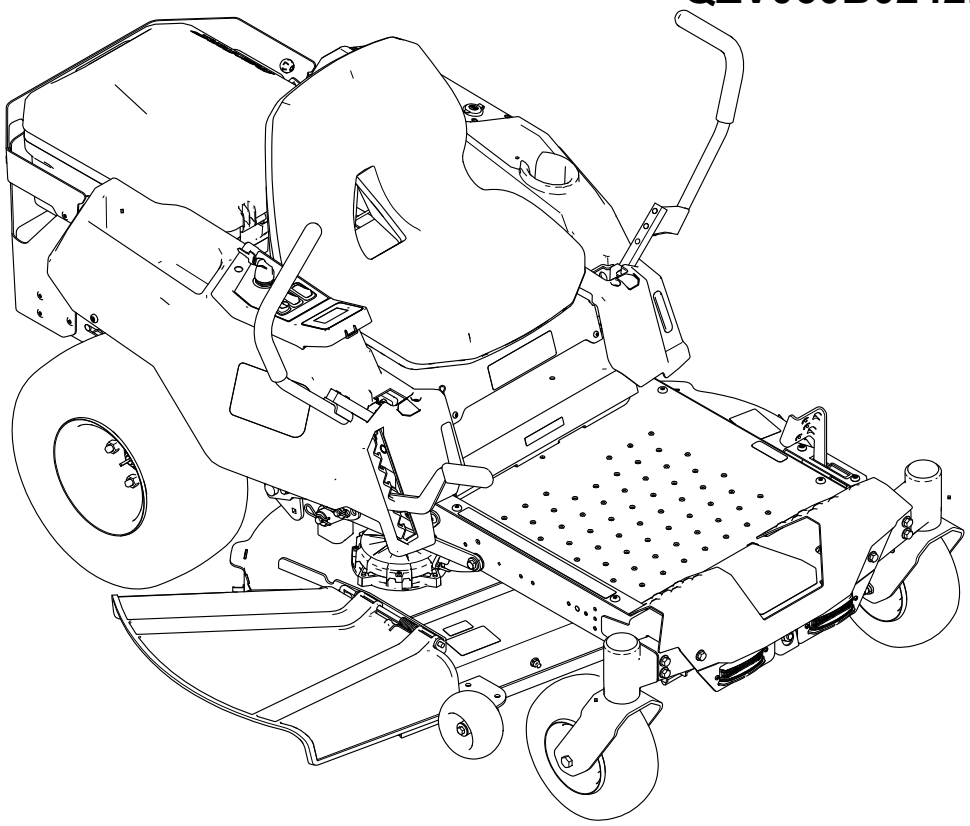

4507-640A

Original Instructions (EN)

4507-640 A

Disclaimers and Regulatory Information

⚠ WARNING

CALIFORNIA
Proposition 65

The power cord on this product contains lead, a chemical known to the State of California to cause birth defects or other reproductive harm. Wash hands after handling.

Use of this product may cause exposure to chemicals known to the State of California to cause cancer, birth defects, or other reproductive harm.

Table of Contents

Chapter 1: Introduction 1–1
- Intended Use 1–1
- Getting Help 1–1

Chapter 2: Safety 2–1
- General Machine Safety Warnings 2–1
- Lawnmower Safety Warnings 2–3
- Additional Safety Messages 2–5
  - Safety-Alert Symbol 2–5
  - General Safety 2–5
- Slope Indicator 2–6
- Safety and Instructional Decals 2–7

Chapter 3: Product Overview 3–1
- Control Panel 3–2
- Parking Brake 3–5
- Motion-Control Levers 3–5
- Specifications 3–6

Chapter 4: Operation 4–1
- Before Operation 4–1
  - Before Operation Safety 4–1
  - Installing the Battery Packs 4–2
  - Performing Daily Maintenance 4–2
  - Safety-Interlock System 4–3
  - Positioning the Seat 4–4
  - Adjusting the Motion-Control Lever Height 4–5
  - Adjusting the Motion-Control Lever Tilt 4–5
- During Operation 4–5
  - During Operation Safety 4–5
  - Starting the Machine 4–7
  - Shutting Off the Machine 4–8
  - Operating the Parking Brake 4–8
  - Driving the Machine 4–9
  - Operating the Mower Blade-Control Switch (PTO) 4–11
  - Side Discharge 4–12
  - Adjusting the Height of Cut 4–12

© 2024—Exmark Mfg. Co., Inc.

Industrial Park Box 808
Beatrice, NE 68310

Contact us at www.Exmark.com

Printed in the USA

All rights reserved

Adjusting the Anti-Scalp Rollers 4–13
Using the Tow Hitch 4–13
Operating Tips 4–13
After Operation 4–15
After Operation Safety 4–15
Charging the Battery Packs 4–15
Hauling the Machine 4–17
Chapter 5: Maintenance 5–1
Maintenance Safety 5–1
Recommended Maintenance Schedule 5–2
Pre-Maintenance Procedures 5–2
Moving a Non-Functioning Machine 5–2
Raising the Machine 5–3
Electrical System Maintenance 5–4
Preparing the Battery Pack for Recycling 5–4
Checking the Battery-Box Filter 5–4
Drive System Maintenance 5–5
Checking the Tire Pressure 5–5
Checking the Wheel Lug Nuts 5–5
Adjusting the Tracking 5–5
Mower-Deck Maintenance 5–7
Blade Service 5–7
Leveling the Mower Deck 5–10
Brake Maintenance 5–14
Testing the Parking Brake 5–14
Cleaning 5–15
Cleaning Under the Mower Deck 5–15
Chapter 6: Storage 6–1
Storing the Machine 6–1
Chapter 7: Troubleshooting 7–1
Machine Troubleshooting 7–1
Battery and Charger Troubleshooting 7–2
Display Error and Fault Code Troubleshooting 7–4
Chapter 8: Schematics 8–1
Electrical Diagram 8–1
California Proposition 65 Warning Information

Chapter 1

Introduction

Intended Use

This rotary-blade, riding lawnmower is intended to be used by homeowners in residential applications. It is designed primarily for cutting grass on well-maintained lawns. Using this product for purposes other than its intended use could prove dangerous to you and bystanders.

Read this information carefully to learn how to operate and maintain your product properly and to avoid injury and product damage. You are responsible for operating the product properly and safely.

Getting Help

Visit www.Exmark.com for product safety and operation training materials, accessory information, help finding a dealer, or to register your product.

Whenever you need service, genuine Exmark parts, or additional information, contact an Authorized Service Dealer or Exmark Customer Service and have the model and serial numbers of your product ready. These numbers are located on the serial plate on your product 1. Write the numbers in the space provided.

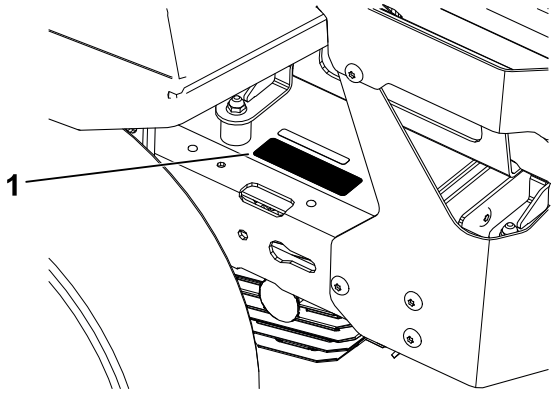

IMPORTANT

With your mobile device, you can scan the QR code on the serial number decal (if equipped) to access warranty, parts, and other product information.

Model Number:		**Serial Number:**	

General Machine Safety Warnings

WARNING—Read all safety warnings, instructions, illustrations and specifications provided with this machine.

Failure to follow the warnings and instructions may result in electric shock, fire and/or serious injury.

The term "machine" in all of the warnings listed below refers to your mains-operated (corded) machine or battery-operated (cordless) machine.

1. **Work area safety**

   A. **Keep work area clean and well lit.** *Cluttered or dark areas invite accidents.*

   B. **Do not operate the machine in explosive atmospheres, such as in the presence of flammable liquids, gasses, or dust.** *The machine creates sparks, which may ignite the dust or fumes.*

   C. **Keep children and bystanders away while operating the machine.** *Distractions can cause you to lose control.*

2. **Electrical safety**

   A. **Machine plugs must match the outlet. Never modify the plug in any way. Do not use any adapter plugs with an earthed (grounded) machine.** *Unmodified plugs and matching outlets will reduce risk of electric shock.*

   B. **Avoid body contact with earthed or grounded surfaces, such as pipes, radiators, ranges, and refrigerators.** *There is an increased risk of electric shock if your body is earthed or grounded.*

   C. **Do not expose the machine to rain or wet conditions.** *Water entering a machine will increase the risk of electric shock.*

   D. **Do not abuse the cord. Never use the cord for carrying, pulling or unplugging the machine. Keep cord away from heat, oil, sharp edges, or moving parts.** *Damaged or entangled cords increase the risk of electric shock.*

   E. **When operating the machine outdoors, use an extension cord suitable for outdoor use.** *Use of a cord suitable for outdoor use reduces the risk of electric shock.*

   F. **If operating the machine in a damp location is unavoidable, use a residual current device (RCD) protected supply.** *Use of an RCD reduces the risk of electric shock.*

3. **Personal safety**

   A. **Stay alert, watch what you are doing, and use common sense when operating the machine. Do not use the machine while you are tired or under the influence of drugs, alcohol, or medication.** *A moment of inattention while operating the machine may result in serious personal injury.*

   B. **Use personal protective equipment. Always wear eye protection.** *Protective equipment such as a dust mask, non-skid safety shoes, or hearing protection used for appropriate conditions will reduce personal injuries.*

   C. **Prevent unintentional starting. Ensure the switch is in the off-position before connecting to power source and/or battery pack.** *Energising a machine that has the switch on invites accidents.*

   D. **Remove any adjusting key or wrench before turning the machine on.** *A wrench or a key left attached to a rotating part of the machine may result in personal injury.*

   E. **Do not overreach. Keep proper footing and balance at all times.** *This enables better control of the machine in unexpected situations.*

   F. **Dress properly. Do not wear loose clothing or jewelry. Keep your hair and clothing away from moving parts.** *Loose clothes, jewelry or long hair can be caught in moving parts.*

   G. **If devices are provided for the connection of dust extraction and collection facilities, ensure these are connected and properly used.** *Use of dust collection can reduce dust-related hazards.*

   H. **Do not let familiarity gained from frequent use of the machine allow you to become complacent and ignore machine safety principles.** *A careless action can cause severe injury within a fraction of a second.*

4. **Machine use and care**

   A. **Do not force the machine. Use the correct machine for your application.** *The correct machine will do the job better and safer at the rate for which it was designed.*

   B. **Do not use the machine if the switch does not turn it on and off.** *Any machine that cannot be controlled with the switch is dangerous and must be repaired.*

   C. **Disconnect the plug from the power source and/or remove the battery pack, if detachable, from the machine before making any adjustments, changing accessories, or storing the machine.** *Such preventive safety measures reduce the risk of starting the machine accidentally.*

   D. **Store an idle machine out of the reach of children and do not allow persons unfamiliar with the machine or these instructions to operate the machine.** *A machine is dangerous in the hands of untrained users.*

   E. **Maintain the machine and accessories. Check for misalignment or binding of moving parts, breakage of parts and any other condition that may affect the operation of the machine. If damaged, have the machine repaired before use.** *Many accidents are caused by a poorly maintained machine.*

   F. **Keep cutting tools sharp and clean.** *Properly maintained cutting tools with sharp cutting edges are less likely to bind and are easier to control.*

   G. **Use the machine, accessories, and tool bits etc., in accordance with these instructions, taking into account the working conditions and the work to be**

performed. *Use of the machine for operations different from those intended could result in a hazardous situation.*

H. **Keep handles and grasping surfaces dry, clean and free from oil and grease.** *Slippery handles and grasping surfaces do not allow for safe handling and control of the machine in unexpected situations.*

5. **Battery machine use and care**

   A. **Recharge only with the charger specified by a manufacturer.** *A charger that is suitable for one type of battery pack may create a risk of fire when used with another battery pack.*

   B. **Use the machine only with specifically designated batteries.** *Use of any other batteries may create a risk of injury and fire.*

   C. **When battery pack is not in use, keep it away from other metal objects, like paper clips, coins, keys, nails, screws or other small metal objects, that can make a connection from one terminal to another.** *Shorting the battery terminals together may cause burns or a fire.*

   D. **Under abusive conditions, liquid may be ejected from the battery; avoid contact. If contact accidentally occurs, flush with water. If liquid contacts eyes, additionally seek medical help.** *Liquid ejected from the battery may cause irritation or burns.*

   E. **Do not use a battery pack or machine that is damaged or modified.** *Damaged or modified batteries may exhibit unpredictable behavior resulting in fire, explosion or risk or injury.*

   F. **Do not expose a battery pack or machine to fire or excessive temperature.** *Exposure to fire temperature above 130°C (265°F) may cause an explosion.*

   G. **Follow all charging instructions and do not charge the battery pack or machine outside the temperature range specified in the instructions.** *Charging improperly or at temperatures outside the specified range may damage the battery and increase the risk of fire.*

6. **Service**

   A. **Have your machine serviced by a qualified repair person using only identical replacement parts.** *This will ensure that the safety of the machine is maintained.*

   B. **Never service damaged battery packs.** *Service of battery packs should be performed only by the manufacturer or authorized service providers.*

Lawnmower Safety Warnings

A. **Do not use the lawnmower in bad weather conditions, especially when there is a risk of lightning.** *This decreases the risk of being struck by lightning.*

B. **Thoroughly inspect the area for wildlife where the lawnmower is to be used.** *Wildlife may be injured by the lawnmower during operation.*

C. **Thoroughly inspect the area where the lawnmower is to be used and remove all stones, sticks, wires, bones, and other foreign objects.** *Thrown objects can cause personal injury.*

D. **Before using the lawnmower, always visually inspect to see that the blade and the blade assembly are not worn or damaged.** *Worn or damaged parts increase the risk of injury.*

E. **Keep guards in place. Guards must be in working order and be properly mounted.** *A guard that is loose, damaged, or is not functioning correctly may result in personal injury.*

F. **Keep all cooling air inlets clear of debris.** *Blocked air inlets and debris may result in overheating or risk of fire.*

G. **While operating the lawnmower, always wear non-slip and protective footwear. Do not operate the lawnmower when barefoot or wearing open sandals.** *This reduces the chance of injury to the feet from contact with the moving blade.*

H. **While operating the lawnmower, always wear long trousers.** *Exposed skin increases the likelihood of injury from thrown objects.*

I. **Do not operate the lawnmower on slopes greater than 15°.** *This reduces the risk of loss of control, slipping, and rollover which may result in personal injury.*

J. **Exercise extreme caution when working on slopes.** *This reduces the risk of loss of control, slipping, and rollover which may result in personal injury.*

K. **Use extreme caution when reversing the lawnmower.** *Always be aware of your surroundings.*

L. **Do not touch blades and other hazardous moving parts while they are still in motion.** *This reduces the risk of injury from moving parts.*

M. **When clearing jammed material or cleaning the lawnmower, make sure all power switches are off, and remove the key.** *Unexpected operation of the lawnmower may result in serious personal injury.*

Save all warnings and instructions for future reference.

Additional Safety Messages

Safety-Alert Symbol

The safety-alert symbol shown in this manual and on the machine identifies important safety messages that you must follow to prevent accidents.



G405934

DANGER indicates an imminently hazardous situation which, if not avoided, **will** result in death or serious injury.

WARNING indicates a potentially hazardous situation which, if not avoided, **could** result in death or serious injury.

CAUTION indicates a potentially hazardous situation which, if not avoided, **may** result in minor or moderate injury.

This manual uses 2 other words to highlight information. **Important** calls attention to special mechanical information and **Note** emphasizes general information worthy of special attention.

General Safety

This product is capable of amputating hands and feet and of throwing objects. Always follow all safety instructions to avoid serious personal injury or death.

- Keep clear of the discharge opening.
- Allow only responsible and physically capable people to operate the machine.
- Shut off the machine, remove the key, and wait for all moving parts to stop before leaving the operator's position. Allow the machine to cool before servicing, adjusting, or cleaning it.

Slope Indicator

You may copy this page for personal use.

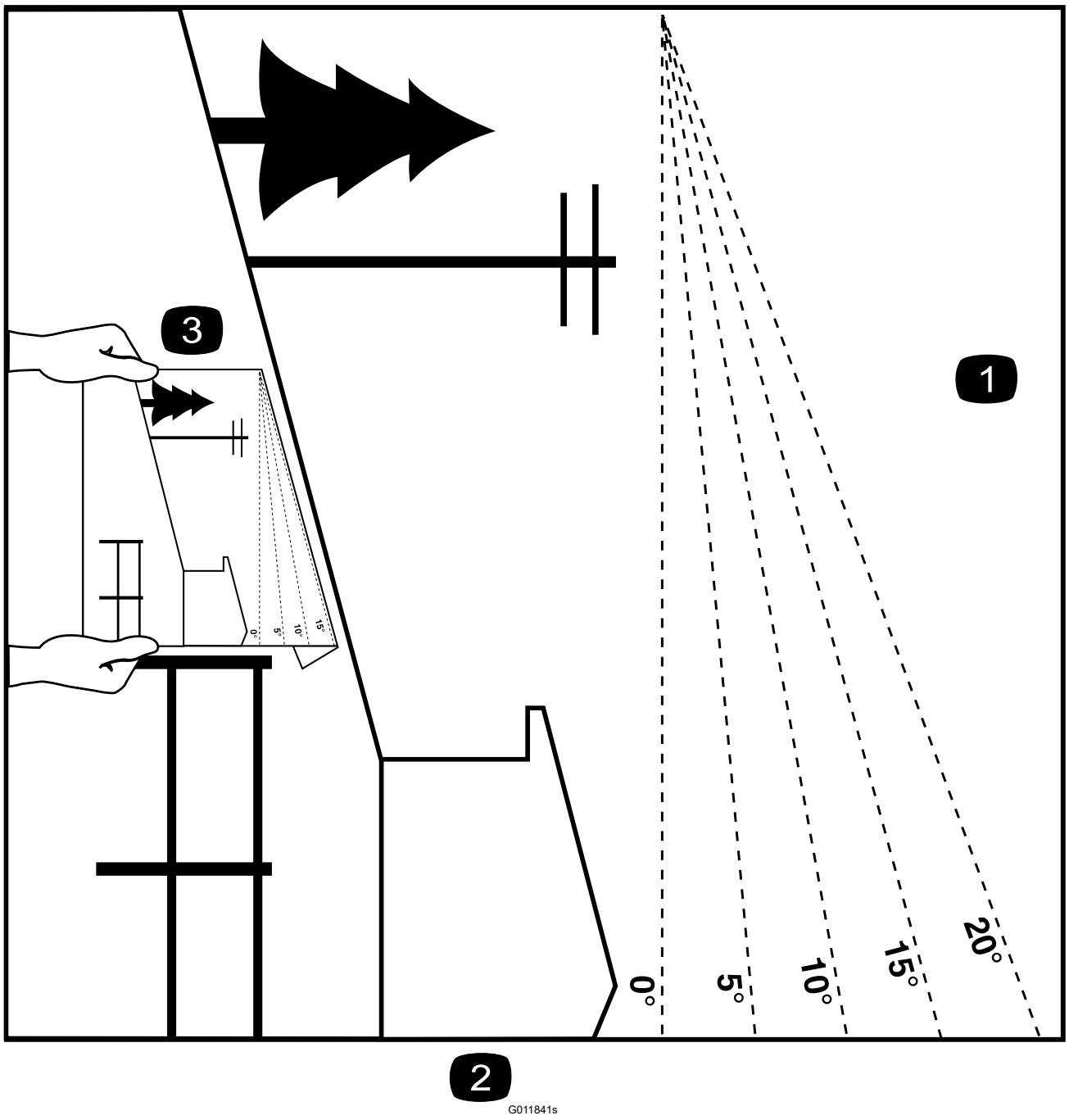

(1) The maximum slope you can operate the machine on is 15 degrees. Use the slope chart to determine the degree of slope of hills before operating. **Do not operate this machine on a slope greater than 15 degrees.** Fold along the appropriate line to match the recommended slope.

(2) Align this edge with a vertical surface, a tree, building, fence pole, etc.

(3) Example of how to compare slope with folded edge

Safety and Instructional Decals

Safety decals and instructions are easily visible to the operator and are located near any area of potential danger. Replace any decal that is damaged or missing.

Decal Part: Manufacturer Mark

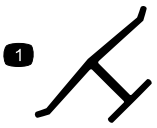

s_decaloemmarkt

(1) This mark indicates that the blade is identified as a part from the original machine manufacturer.

Decal Part: 130-0731

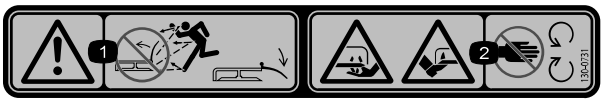

s_decal130-0731

(1) Warning—thrown object hazard; keep the deflector in place.

(2) Cutting hazard of hand or foot, mower blade—keep away from moving parts.

Decal Part: 133-8061



s_decal133-8061

Decal Part: 137-8127

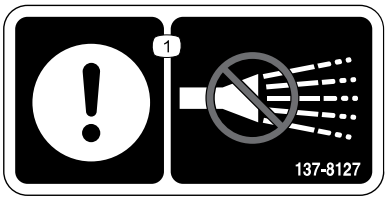

s_decal137-8127

(1) Attention—do not spray with high-pressure water.

Decal Part: 139-1271



s_decal139-1271

1. Parking brake—Engage
2. Parking brake—Disengage

Decal Part: 139-2392



s_decal139-2392

Decal Part: 145-3802

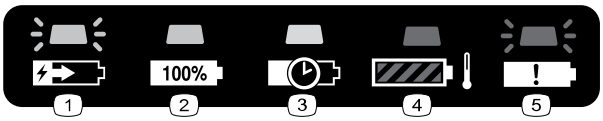

s_decal145-3802

1. The battery pack is charging.
2. The battery pack is fully charged.
3. The battery pack charging is on standby while other batteries charge (charging mode dependent).
4. The battery pack is over or under the appropriate temperature range.
5. Battery pack charging fault.

Decal Part: 145-8265



decal145-8265

1. Battery charging status

Decal Part: 145-8275

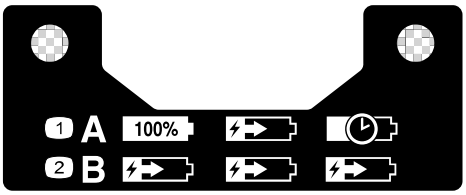

s_decal145-8275

1. Sequential Rapid charging mode—one battery charges fully at a time (other batteries remain on standby).
2. Parallel charging mode—all batteries are charged to the same level.

Decal Part: 146-2306

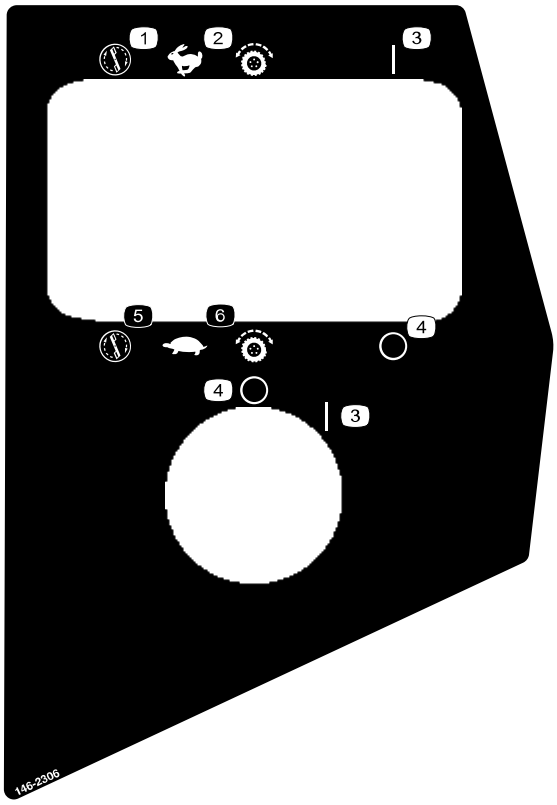

s_decal146-2306

1. Blade speed-fast
2. Traction speed-fast
3. On
4. Off
5. Blade speed-slow
6. Traction speed-slow

Decal Part: 146-2455

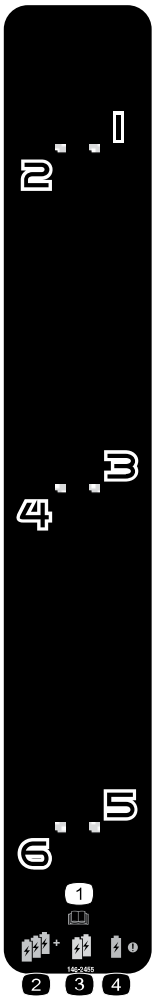

s_decal146-2455

1. Read the *Operator's Manual*.
2. Full function
3. Limited function
4. No function/extremely limited function

Decal Part: 147-0290



decal147-0290

1 Warning—light is bright; do not look directly into the light.

Decal Part: 147-7615

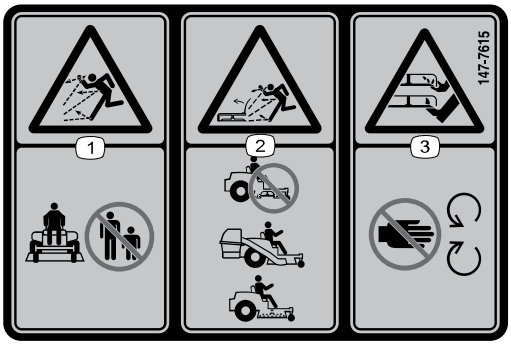

decal147-7615

1 Thrown object hazard—keep bystanders away.

2 Thrown object hazard, mower—do not operate without the deflector, discharge cover, or grass collection system in place.

3 Cutting/dismemberment hazard of hand or foot, mower blade—keep away from moving parts.

Decal Part: 147-7617

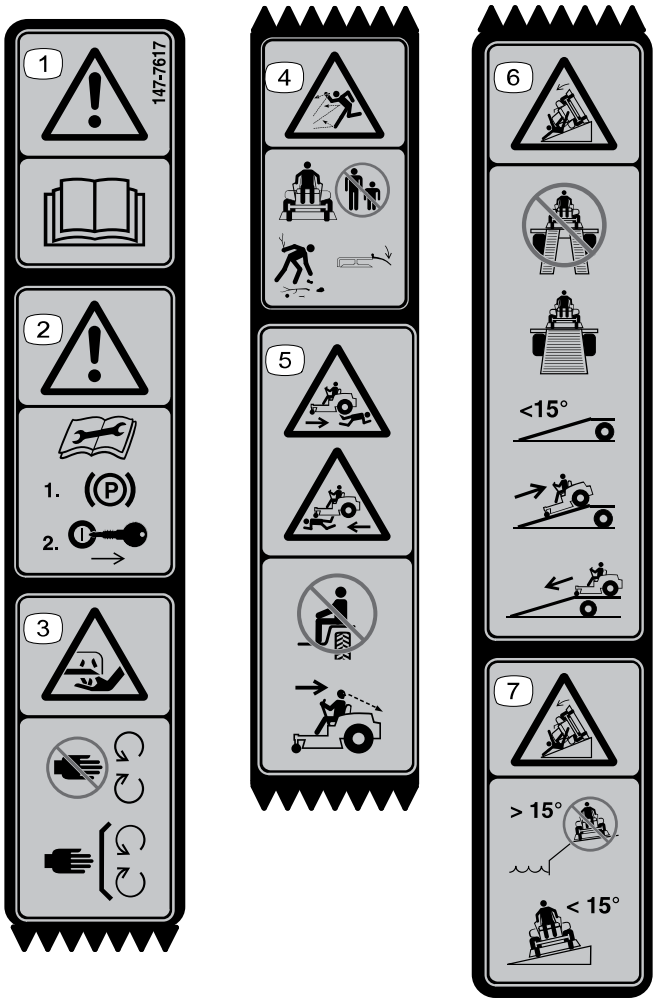

s_decal147-7617

Note: This machine complies with the industry standard stability test in the static lateral and longitudinal tests with the maximum recommended slope indicated on the decal. Review the instructions for operating the machine on slopes in the *Operator's Manual* as well as the conditions in which you would operate the machine to determine whether you can operate the machine in the conditions on that day and at that site. Changes in the terrain can result in a change in slope operation for the machine.

(1) Warning—read the *Operator's Manual*.

(2) Warning—before performing maintenance, engage the parking brake and remove the key.

(3) Cutting/dismemberment hazard of hand—keep away from moving parts; keep all guards and shields in place.

(4) Thrown object hazard—keep bystanders away; pick up debris; keep the deflector in place.

(5) Runover hazard—do not carry passengers; look down and behind you when moving in reverse.

(6) Tipping hazard—do not use dual ramps when loading onto a trailer; use 1 ramp wide enough for the machine; use a ramp with an incline less than 15°; back up the ramp when loading the machine and drive forward off the ramp when unloading.

(7) Tipping hazard—do not use the machine near drop-offs with slopes greater than 15°; only operate across slopes less than 15°.

Decal Part: 147-7619

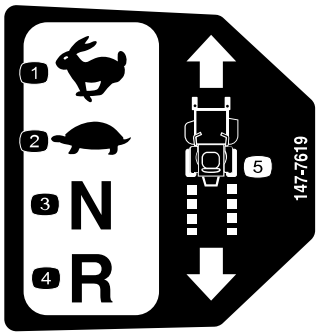

decal147-7619

1. Fast
2. Slow
3. Neutral
4. Reverse
5. Traction controls

Decal Part: 147-7620

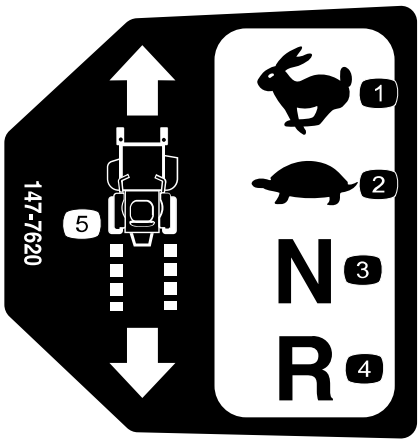

decal147-7620

1. Fast
2. Slow
3. Neutral
4. Reverse
5. Traction controls

Decal Part: 161-3790

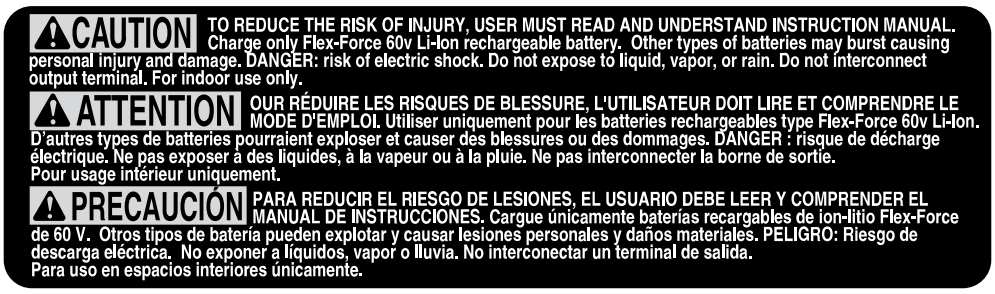

s_decal161-3790.svg

Chapter 3

Product Overview

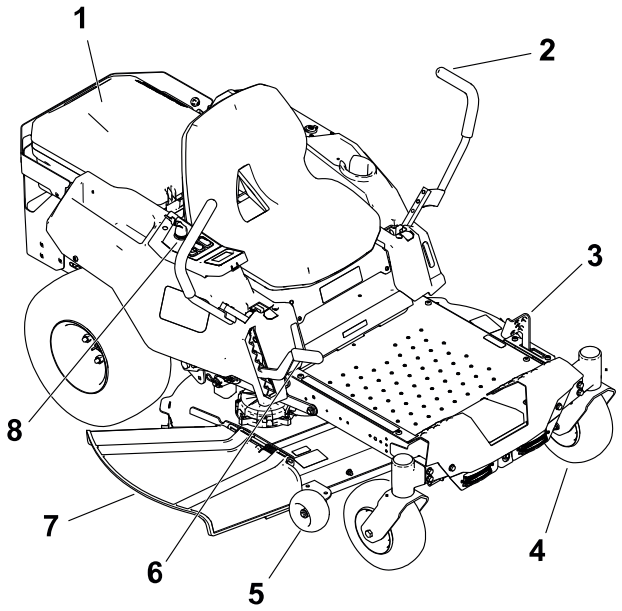

G439573

1. Battery box
2. Motion-control lever
3. Parking brake
4. Caster wheel
5. Anti-scalp roller
6. Height-of-cut lever
7. Grass deflector
8. Control panel

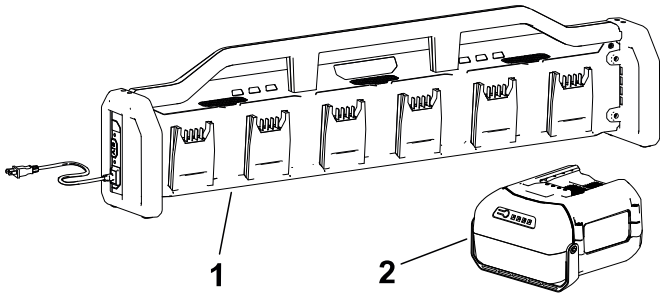

G448680

1. Battery charger
2. Battery pack (4 included)

Control Panel

Become familiar with all the controls before you start and operate the machine.

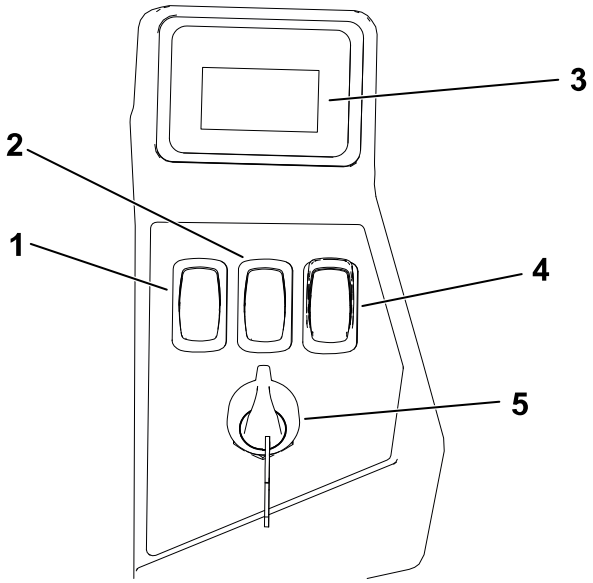

1 Blade-speed switch

2 Traction-speed switch

3 Information display

4 Blade-control switch (power takeoff)

5 Key switch

Key Switch

Use the key switch to power the machine ON 2 or OFF 1. Turn the key past the ON position to start the machine.

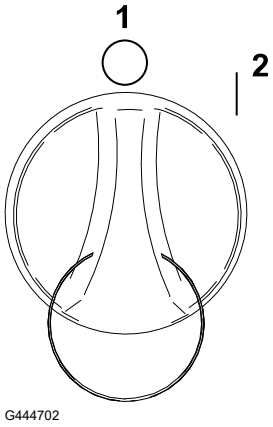

Traction-Speed Switch

Use the traction-speed switch to select a faster or slower ground speed.

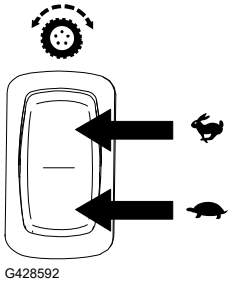

Blade-Speed Switch

Use the blade-speed switch to select a faster or slower blade speed.

Note: Use the FAST position for best cutting performance; use the SLOW position for less energy consumption.

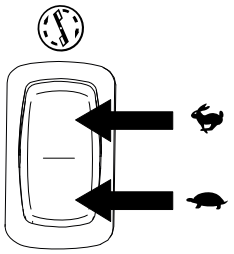

G428591

Blade-Control (PTO) Switch

The blade-control switch, represented by a power-takeoff (PTO) symbol, engages and disengages power to the mower blades.

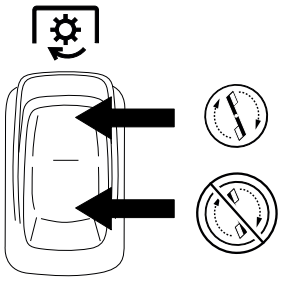

G428617

Information Display

The information display shows messages and the status of the machine (e.g., operating hours, battery charge, component positions).

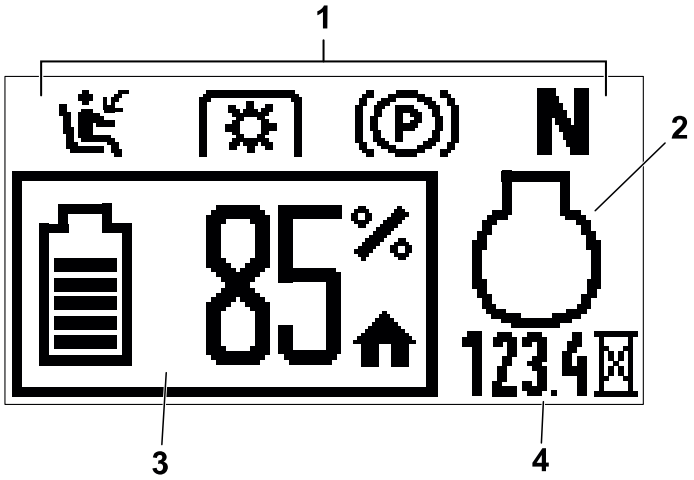

G427630

1. Interlock indicators
2. Motor status (displays only during active faults)
3. Battery status/charge
4. Operating hours

Information Display (continued)

Display Icon

	The operator is not in the seat.
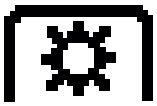	The blade-control switch (PTO) is engaged.
	The blade-control switch (PTO) is engaged but the machine is preventing the blades from running. Check the interlocks or active machine faults.
	The parking brake is engaged. When this flashes, release the parking brake before driving the machine.
	The motion-control levers are in the NEUTRAL-LOCK position. When this flashes, move the levers inward before driving the machine.
	Hour meter
	Engage the parking brake.
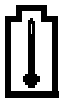	The battery temperature is too high.
	The battery load is too high.
	Limp mode is active.
	The motor temperature is too high.
	The motor load is too high.
	Fault code

Parking Brake

Whenever you shut off the machine, engage the parking brake to prevent accidental movement of the machine.

You can use the parking brake to stop the machine in emergency situations or when a machine fault disables the traction controls.

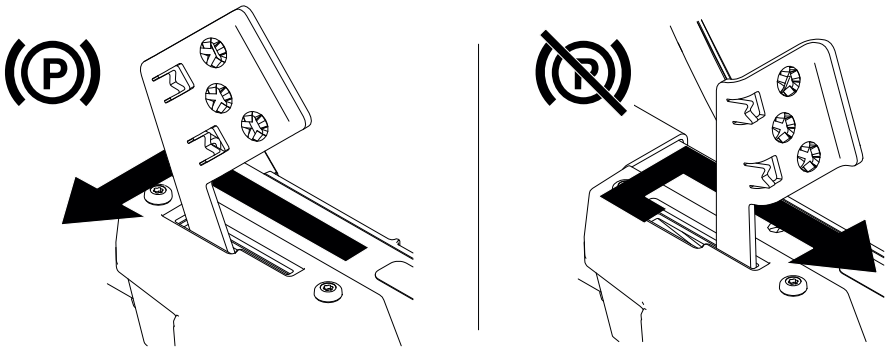

G428514

Motion-Control Levers

Use the motion-control levers to drive the machine forward, reverse, and turn either direction.

Specifications

Note: Specifications and design are subject to change without notice.

Dimensions

Cutting width	107 cm (42 inches)
Width with deflector down	137 cm (53.8 inches)
Width with deflector up	116 cm (45.8 inches)
Length	191 cm (75.0 inches)
Height	109 cm (42.75 inches)
Weight	237 kg (522 lb)
Tread width (center to center of tires, widthwise) Drive wheels Caster wheels	 84 cm (33.0 inches) 78 cm (30.5 inches)

Electrical System

Included Battery Packs

Model	142-9132
Battery pack capacity	10.0 Ah 540 Wh
Battery manufacturer rating = 60V maximum and 54V nominal. Actual voltage varies with load.	
Battery quantity supplied with the machine	4
Battery compartments available on the machine	6

Compatible Battery Packs

Model	**142-8550**	**142-9132**
Battery pack capacity	7.5 Ah 405 Wh	10.0 Ah 540 Wh
Battery manufacturer rating = 60V maximum and 54V nominal. Actual voltage varies with load.		

Included Battery Charger

Model	66550
Type	Flex-Force Power System® 60V Pro 6-Pod Battery Charger
Input	120V AC ~12.0A, 60Hz
Output	60V MAX DC ⎓12.0A

Compatible Battery Charger

Model	142-8383
Type	Professional Power System 60V Rapid Charger
Input	120V AC ~5.0A, 60Hz
Output	60V DC ⎓ 5.5A

Appropriate Temperature Ranges

Charging/storage	5°C (41°F) to 40°C (104°F)*
Battery operation	-30°C (-22°F) to 49°C (120°F)
Machine operation	5°C (41°F) to 40°C (104°F)

*Charging time will increase if you do not charge the battery pack within this range.

Store the machine, battery pack, and battery charger in an enclosed clean, dry area.

Safety Interlock

- LCD indicators appear for the parking brake, motion-control levers, and operator presence in the message display on the front control panel.

  Note: Because the PTO must be disengaged to start the machine, the LCD indicator will not illuminate at this time.
- PTO must be disengaged and motion-control levers must be in neutral to start the machine.

  Note: It is not necessary for the operator to be in the seat to start the machine.
- Mower blades will stop if the right and/or left side motion-control lever is moved or released outward.

Operator Controls

- Steering and motion control:

  Note: The motion-control levers are adjustable to 2 heights.

  – Separate levers, on each side of the console, control speed and direction of travel of the respective drive wheels.

  – Steering is controlled by varying the position of the levers relative to each other.

  – Moving motion control levers outward into the T-slots locks the drive system in neutral.

- PTO engagement switch: engages the mower blades
- Parking-brake foot pedal: engages/disengages the parking brake
- Height-of-cut lever: sets the cutting height to the desired position
- Deck-lift assist lever: hand lever that assists in raising the deck

  Note: There is an optional kit for a foot-assist pedal.

Seat

- Type: 2-tone upholstered high back, foam padded seat with spring suspension
- Mounting: hinged to tilt up for access to electrical components; adjustable fore and aft.
- Armrests: molded flip-up armrests (optional)
- Seat safety switch: incorporated into the safety-interlock system.

Transmission

- Speeds:

  – 0 to 7.0 mph (11.3 km/hr) forward

  – 0 to 3.0 mph (4.8 km/hr) reverse.

- Disengaging the drive wheel motor hubs allows the machine to be moved when engine is not running.
- Transmission Fluid Type: Exmark Synthetic Electric Motor Drive Oil (Part No. 146-1159)
- Transmission Fluid Capacity: 150 mL (5 fl oz)

Tires & Wheels

Drive Tires

	Pneumatic (Air-Filled)
Quantity	2
Tread	K500
Size	18 x 7.50-8
Ply Rating	4
Pressure	206 kPa (30 psi)

Tires & Wheels (continued)

Front Caster Tires

	Semi-Pneumatic
Quantity	2
Tread	Smooth
Size	11 x 4.5
Ply Rating	2
Pressure	90 kPa (13 psi)

Cutting Deck

- Cutting width: 107 cm (42 inches)
- Discharge: side
- Blade size: 54.9 cm (21.6 inches); Number of blades: 2
- Number of anti-scalp rollers: 3
- Deck: Full floating deck is attached to the support frame. Maximum turf protection is provided with anti-scalp rollers. Deck design allows for bagging, mulching or side discharge.
- Deck Depth: 10.2 cm (4.0 inches)
- Cutting height adjustment: The cutting height can be adjusted from 3.8 cm (1-1/2 inches) to 11.4 cm (4-1/2 inches) in 1.3 cm (1/2 inch) increments.
- Mulching Kit: optional

Torque Requirements

Bolt location	**Torque**
Deck motor	20 to 25 N·m (175 to 225 in-lb)
Blade mounting bolt	81 to 108 N·m (60 to 80 ft-lb)
Battery box mounting bolt	20 to 25 N·m (175 to 225 in-lb)
Wheel lug nuts	95 to 122 N·m (70 to 90 ft-lb)

Attachments/Accessories

A selection of Exmark approved attachments and accessories is available for use with the machine to enhance and expand its capabilities. Contact your Authorized Service Dealer or authorized Exmark distributor or go to www.Exmark.com for a list of all approved attachments and accessories.

To ensure optimum performance and continued safety certification of the machine, use only genuine Exmark replacement parts and accessories.

Before Operation

Before Operation Safety

- Do not operate the machine unless all safety switches and other devices are in place and working properly.
- Before leaving the operator's position for any reason, do the following:
  - Park the machine on a level surface.
  - Disengage the drives and the power take-off.
  - Engage the parking brake.
  - Shut off the machine and remove the key.
  - Wait for all moving parts to stop.
- Before mowing, always inspect the machine to ensure that the blades, blade bolts, and cutting assemblies are in good working condition.
- This product generates an electromagnetic field. If you wear an implantable electronic medical device, consult your health care professional before using this product.
- Use only accessories and attachments approved by Exmark.
- Do not carry passengers on the machine and keep bystanders and pets away from the machine during operation.
- This machine may produce a sound power level that exceeds 85 dBA at the operator's ear when accessories are installed. This can cause hearing loss through extended periods of exposure. Wear hearing protection when operating this machine with accessories installed.
- Before operating the machine, ensure that the operator presence controls and either the discharge deflector or the entire grass collection system are in place and working properly. Otherwise, do not operate the machine.
- When you shut off the machine, the blades should stop. If not, stop using the machine immediately and contact an Authorized Service Dealer.
- Shut off the machine and attachment(s) if anyone enters the area.

Installing the Battery Packs

Any Flex-Force Power System® battery can be used with the machine.

Install at least 3 fully charged batteries, with 4 Ah or higher, for best mowing performance; 2 or fewer batteries, or batteries with lower amperage, may only provide enough power to drive the machine. Install more batteries and/or batteries with higher amperage to increase machine runtime.

IMPORTANT

Use the battery packs only in temperatures that are within the appropriate range; refer to Specifications, page 3–6.

1. Make sure that the vents on the batteries are clear of any dust and debris.
2. Lift up the battery-compartment lid.
3. Align the cavity in the battery pack with the tongue on the machine and slide the battery pack into the compartment until it locks into place with an audible click.
4. Turn the key switch to the On position and ensure that the LED light next to each battery pack illuminates.

   Note: If a light does not illuminate for a battery pack, refer to 7 Troubleshooting, page 7–1.
5. Close the battery-compartment lid.

   Note: If the battery-compartment lid does not close completely, the batteries are not fully installed.

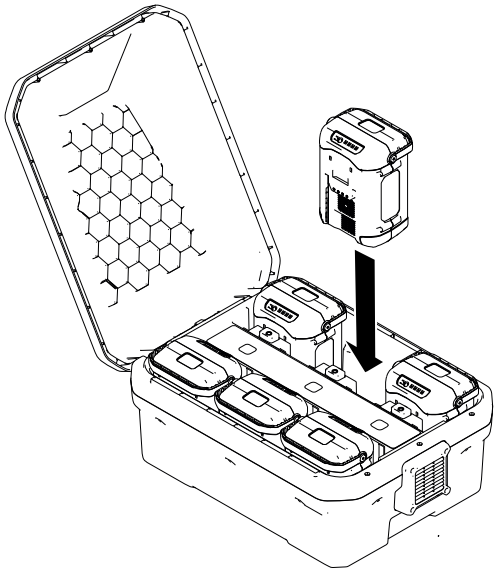

G445491

Performing Daily Maintenance

Before starting the machine each day, perform the Each Use/Daily procedures listed in the Maintenance Schedule.

Safety-Interlock System

The safety-interlock system is designed to prevent the machine from driving or engaging the blades unless the parking brake is disengaged:

It also is designed to shut off the blades whenever you rise from the seat.

⚠ WARNING ⚠

If the safety-interlock switches are disconnected or damaged, the machine could operate unexpectedly, causing personal injury.

- **Do not tamper with the interlock switches.**
- **Check the operation of the interlock switches daily and replace any damaged switches before operating the machine.**

Testing the Safety-Interlock System

Test the safety-interlock system before you use the machine each time. If the safety system does not operate as described below, have an Authorized Service Dealer repair the safety system immediately.

1. Sit on the seat, start the machine, and disengage the parking brake.
2. Engage the blade-control switch (PTO), and rise slightly from the seat.

   The mower blades should shut off, and the information display should show the following icons.



G447273

3. Sit on the seat and disengage the blade-control switch.
4. Slowly move the motion-control levers forward and rise slightly from the seat.

   The machine should stop moving and display the following icon.



G427900

5. Sit on the seat, engage the parking brake and engage the blade-control switch.

   The mower blades should not engage, and the information display should show the following icons.

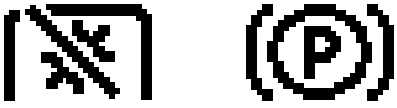

G447274

Safety-Interlock System (continued)

6. Disengage the blade-control switch.
7. Ensure that the parking brake is engaged and slowly move the motion-control levers forward.

   The machine should not move, and the information display should show the following icon.



G427902

8. Shut off the machine and remove the key.

Positioning the Seat

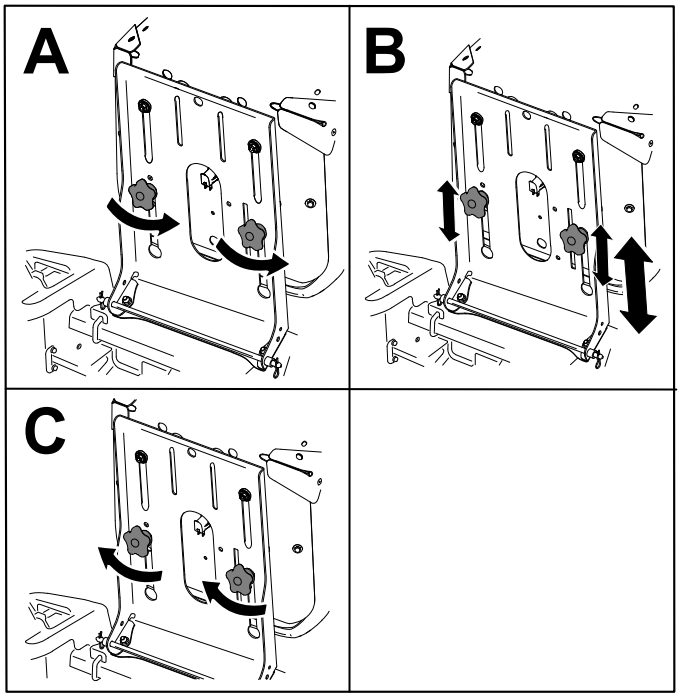

G293874s

Adjusting the Motion-Control Lever Height

Adjust the motion-control levers higher or lower for your comfort.

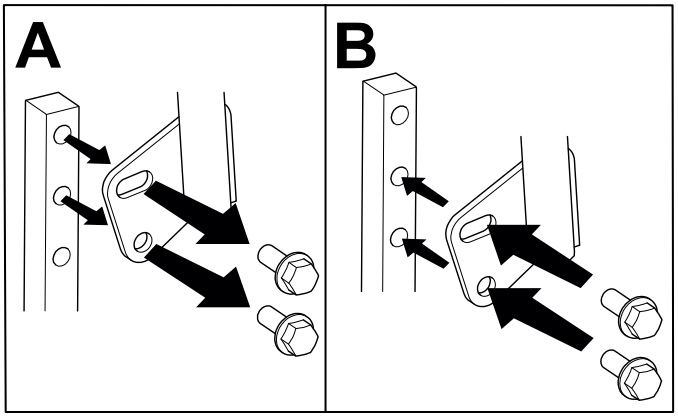

G441093

Adjusting the Motion-Control Lever Tilt

Adjust the motion-control levers forward or rearward for your comfort.

1. Loosen the upper bolt.
2. Loosen the lower bolt enough to pivot the control lever forward or rearward.
3. Tighten both bolts.
4. Repeat the adjustment for the other control lever.

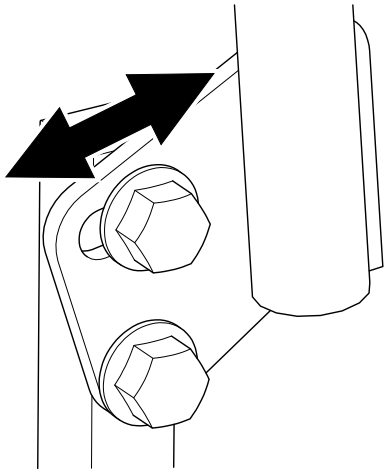

G333846s

During Operation

During Operation Safety

- Before you start the machine, ensure that all drives are in neutral.
- Keep away from holes, ruts, bumps, rocks, and other hidden hazards. Use care when approaching blind corners, shrubs, trees, tall grass or other objects that may hide obstacles or obscure vision. Uneven terrain could overturn the machine.
- Shut off the machine and disengage the drive to the cutting unit after striking a foreign object or if an abnormal vibration occurs. Inspect the cutting unit for damage and make repairs before starting and operating the machine.
- Be alert, slow down, and use caution when making turns and crossing roads and sidewalks with the machine. Always yield the right-of-way.

During Operation Safety (continued)

- Do not use the machine as a towing vehicle.
- Be aware of the mower discharge path and direct discharge away from others. Avoid discharging material against a wall or obstruction as the material may ricochet back toward the operator. Stop the blades, slow down, and use caution when crossing surfaces other than grass and when transporting the mower.
- Do not leave a running machine unattended.
- Be alert and shut off the machine if children enter the area.

Slope Safety

- Slopes are a major factor related to loss of control and rollover accidents, which can result in severe injury or death. The operator is responsible for safe slope operation. Operating the machine on any slope requires extra caution. Before using the machine on a slope, do the following:
  - Review and understand the slope instructions in the manual and on the machine.
  - Use an angle indicator to determine the approximate slope angle of the area.
  - Never operate on slopes greater than 15°.
  - Evaluate the site conditions of the day to determine if the slope is safe for machine operation. Use common sense and good judgment when performing this evaluation. Changes in the terrain, such as moisture, can quickly affect the operation of the machine on a slope.
- Identify hazards at the base of the slope. Do not operate the machine near drop-offs, ditches, embankments, water, or other hazards. The machine could suddenly roll over if a wheel goes over the edge or the edge collapses. Keep a safe distance (twice the width of the machine) between the machine and any hazard. Use a walk-behind machine or a hand trimmer to mow the grass in these areas.

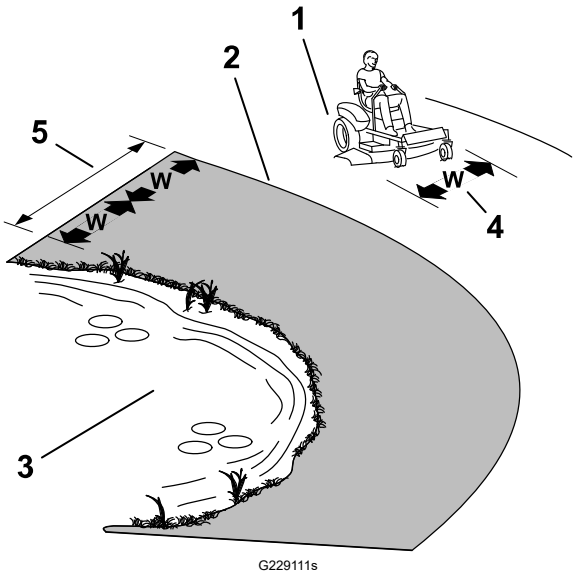

G229111s

(1) Safe Zone—use the machine here on slopes less than 15° or flat areas.

(2) Danger Zone—use a walk-behind mower and/or a hand trimmer on slopes greater than 15° and near drop-offs or water.

(3) Water

(4) W = Width of the machine

(5) Keep a safe distance (twice the width of the machine) between the machine and any hazard.

- Avoid starting, stopping, or turning the machine on slopes. Avoid making sudden changes in speed or direction; turn slowly and gradually.

During Operation Safety (continued)

- Do not operate a machine under any conditions where traction, steering, or stability is in question. Be aware that operating the machine on wet grass, across slopes, or downhill may cause the machine to lose traction. Loss of traction to the drive wheels may result in sliding and a loss of braking and steering. The machine can slide even if the drive wheels are stopped.
- Remove or mark obstacles such as ditches, holes, ruts, bumps, rocks, or other hidden hazards. Tall grass can hide obstacles. Uneven terrain could overturn the machine.
- Use extra care while operating with accessories or attachments, such as grass-collection systems. These can change the stability of the machine and cause a loss of control. Follow directions for counterweights.
- If possible, keep the deck lowered to the ground while operating on slopes. Raising the deck while operating on slopes can cause the machine to become unstable.

Towing Safety

- Do not attach towed equipment except at the hitch point.
- Do not use the machine as a towing vehicle unless it has a hitch installed.
- Do not exceed the maximum gross towing weight.
- Never allow children or others near the towed equipment.
- On slopes, the weight of the towed equipment may cause loss of traction, increased risk of rollover, and loss of control. Reduce the towed weight and slow down.
- The stopping distance may increase with the weight of a towed load. Travel slowly and allow extra distance to stop.
- Make wide turns to keep the attachment clear of the machine.

Starting the Machine

1. Sit on the seat.
2. Turn the key switch past the On position and release it.
3. Wait for the splash screen to disappear from the information display before operating the machine (approximately 3 to 5 seconds).

Shutting Off the Machine

⚠ CAUTION ⚠

Children or bystanders may be injured if they move or attempt to operate the machine while it is unattended.

Always remove the key and engage the parking brake when leaving the machine unattended.

---

1. Park the machine on a level surface.
2. Disengage the blade-control switch (PTO).
3. Move the motion-control levers outward to the NEUTRAL-LOCK position.
4. Engage the parking brake.
5. Turn the key switch to the OFF position and remove the key.
6. Wait for all moving parts to stop before leaving the operating position.

Operating the Parking Brake

Whenever you shut off the machine, engage the parking brake to prevent accidental movement of the machine.

- To engage the parking brake, use your foot to push down the parking-brake pedal and move it left into the detent.
- To disengage the parking brake, use your foot to push down the pedal, move the parking-brake pedal to the right out of the detent, and slowly release it.

You can use the parking brake to stop the machine in emergency situations or when a machine fault disables the traction controls.

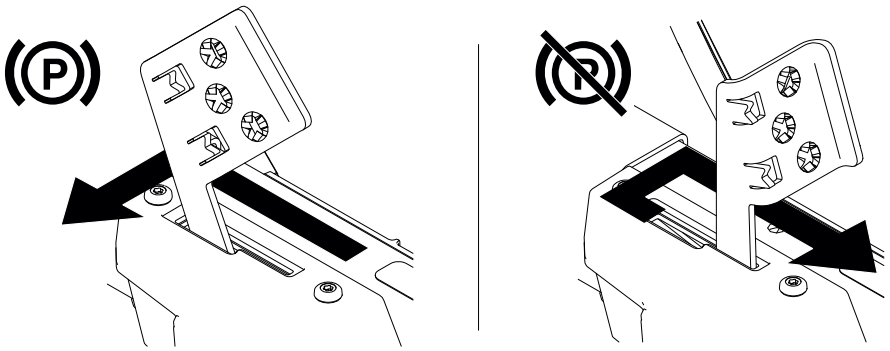

G428514

Driving the Machine

⚠ CAUTION ⚠

Positioning one lever too far in front of the other causes the machine to spin very rapidly. As a result, you may lose control of the machine, causing personal injury to you and damage to the machine.

Slow down the machine before making sharp turns.

The drive wheels turn independently, powered by motors on each axle. You can turn 1 side in reverse while you turn the other forward, causing the machine to spin rather than turn. This greatly improves the machine maneuverability but may require some time for you to adapt to how it moves.

1. Move the motion-control levers down to the center, unlocked position.

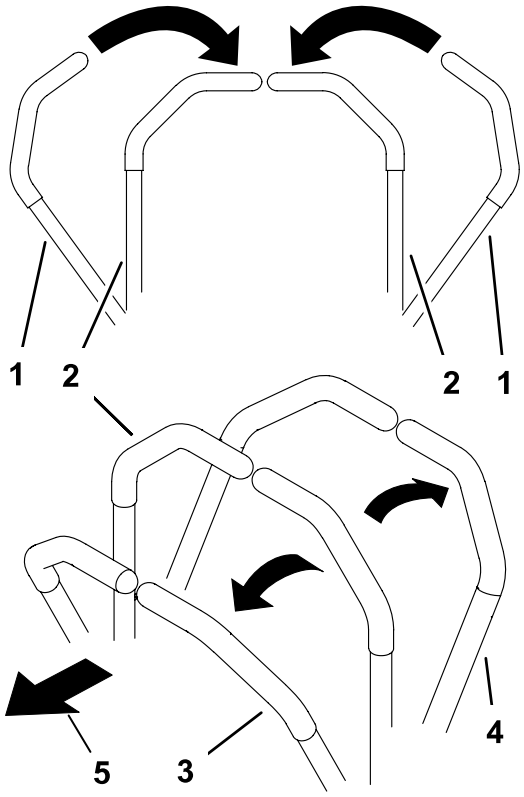

G426843s

1. Motion-control levers—NEUTRAL-LOCK position
2. Center, unlocked position
3. Forward
4. Reverse
5. Front of the machine

Driving the Machine (continued)

2. Slowly push the motion-control levers forward or rearward. Move 1 lever farther than the other lever to turn.

   Note: The farther you move the motion-control levers, the faster the machine moves in that direction.

3. To stop, pull the motion-control levers back to the NEUTRAL position.

   Note: You can use the parking brake to stop the machine in emergency situations or when a machine fault disables the traction controls.

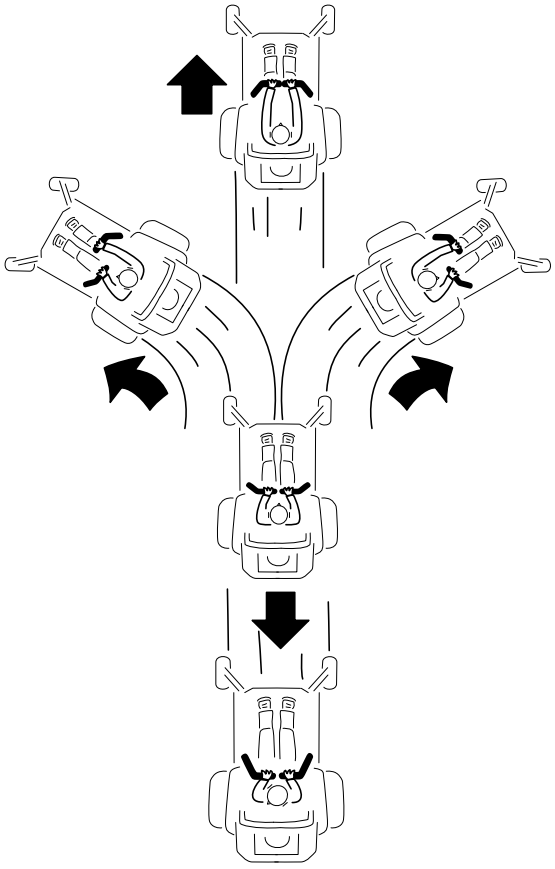

G397314s

Operating the Mower Blade-Control Switch (PTO)

⚠ DANGER ⚠

The rotating blades under the mower deck are dangerous. Blade contact will cause serious injury or death.

Do not put your hands or feet under the mower or mower deck when the blades are engaged.

⚠ DANGER ⚠

An uncovered discharge opening allows objects to be thrown toward you or bystanders. Also, contact with the blade could occur. Thrown objects or blade contact will cause serious injury or death.

Do not operate the mower with the discharge deflector raised, removed, or altered unless a grass collection system or mulch kit is in place and working properly.

---

1. Engage the blade-control switch (PTO).

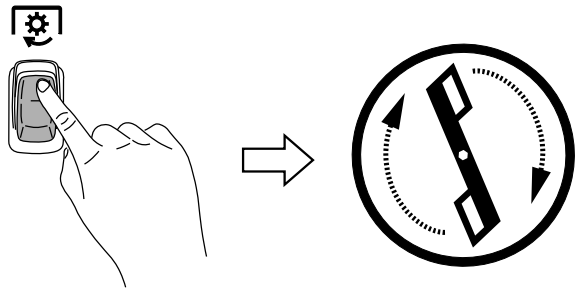

G428133

2. Mow as desired.
3. Disengage the blade-control switch.

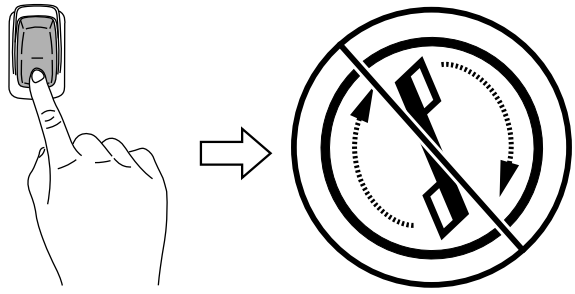

G428132

Side Discharge

The hinged grass deflector disperses clippings to the side and down toward the turf.

⚠ DANGER ⚠

Without the grass deflector, discharge cover, or complete grass catcher assembly mounted in place, you and bystanders are exposed to blade contact and thrown debris. Contact with rotating mower blade(s) and thrown debris will cause injury or death.

- **Do not remove the grass deflector from the machine, because the grass deflector routes material down toward the turf. If the grass deflector is ever damaged, replace it immediately.**
- **Never put your hands or feet under the mower.**
- **Never try to clear the discharge area or mower blades unless the power takeoff (PTO) is off. Rotate the key to the OFF position and remove the key.**

Adjusting the Height of Cut

Use the height-of-cut lever to the right of the operating position to adjust the height of cut from 38 to 114 mm (1-1/2 to 4-1/2 inches) in 13 mm (1/2 inch) increments.

Note: The transport position is the highest height-of-cut position.

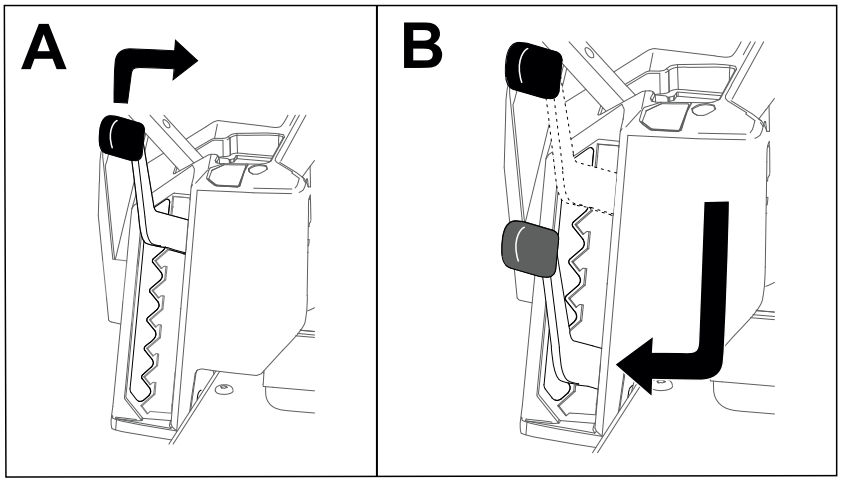

G441492

Adjusting the Anti-Scalp Rollers

Whenever you change the height of cut, adjust the height of the anti-scalp rollers.

1. Park the machine on a level surface, disengage the blade-control switch (PTO), and engage the parking brake.
2. Shut off the machine, remove the key, and wait for all moving parts to stop before leaving the operating position.
3. Adjust the anti-scalp rollers to match the closest height-of-cut position.

   Note: Adjust the anti-scalp rollers so that the rollers do not touch the ground in normal, flat mowing areas.

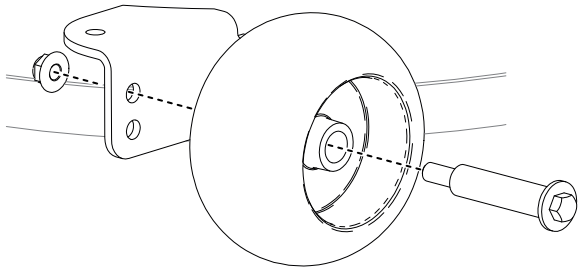

G444946

Using the Tow Hitch

Your machine can tow loads with a maximum gross towing weight (GTW) of up to 113 kg (250 lb).

Do not exceed 45 kg (100 lb) of tongue weight on the tow hitch of the machine.

IMPORTANT

When using the tow hitch, do not overload the machine or trailer, and do not tow ground-engaging equipment. Overloading the machine or trailer, or towing ground-engaging equipment, can cause poor performance or damage to the traction motors, tires, and frame.

1. Park the machine on a level surface, disengage the blade-control switch (PTO), and engage the parking brake.
2. Shut off the machine, remove the key, and wait for all moving parts to stop before leaving the operating position.
3. Attach the equipment to the tow hitch using a hitch pin.

Operating Tips

Maximize Air Circulation

For best mowing and maximum air circulation, operate the machine with the blade-control switch (PTO) in the FAST position. Air circulation is required to thoroughly cut grass clippings, so do not set the height-of-cut so low as to totally surround the mower deck in uncut grass.

Operating Tips (continued)

Always try to have 1 side of the mower deck free from uncut grass, which allows air to be drawn into the mower deck.

Avoid Cutting Too Low

When mowing uneven ground, raise the cutting height to slightly higher than normal to avoid scalping the turf. However, the cutting height used in the past is generally the best one to use. When cutting grass longer than 15 cm (6 inches) tall, you may want to cut the lawn twice to ensure an acceptable quality of cut.

Cut a Third of the Grass Blade

It is best to cut only about a third of the grass blade. Cutting more than that is not recommended unless grass is sparse, or it is late fall when grass grows more slowly.

Alternate the Mowing Direction

Alternate the mowing direction to keep the grass standing straight. This also helps disperse clippings, which enhances decomposition and fertilization.

Mowing Frequency

Grass grows at different rates at different times of the year. To maintain the same cutting height, mow more often in early spring. As the grass growth rate slows in mid summer, mow less frequently. If you cannot mow for an extended period, first mow at a high cutting height, then mow again 2 days later at a lower height setting.

Mow at Slower Ground Speeds

In certain conditions, mowing at a slower ground speed can improve cut quality.

Avoid Grass Clumps

If you must stop driving forward while mowing, a clump of grass clippings may drop onto your lawn. To avoid this, move onto a previously cut area with the blades engaged or disengage the mower deck while moving forward.

Keep the Underside of the Mower Deck Clean

Clean clippings and dirt from the underside of the mower deck after each use. Grass and dirt build-up will eventually decrease the cutting quality.

Maintain the Blades

Maintain a sharp blade throughout the cutting season because a sharp blade cuts cleanly without tearing or shredding the grass blades. Tearing and shredding turns grass brown at the edges, which slows growth and increases the chance of disease. Check the mower blades after each use for sharpness, and for any wear or damage. File down any nicks and sharpen the blades as necessary. If a blade is damaged or worn, replace it.

After Operation

After Operation Safety

- Disengage the PTO whenever you are transporting or not using the machine.
- Use full-width ramps for loading the machine into a trailer or truck.
- Tie the machine down securely using straps, chains, cable, or ropes. Both front and rear straps should be directed down and outward from the machine.
- Replace all worn, damaged, or missing parts and decals. Keep all fasteners tight to ensure that the machine is working properly.

Charging the Battery Packs

IMPORTANT

The battery pack is not fully charged when you purchase it. Before using the machine for the first time, place the battery pack in the charger and charge it until the LED display indicates the battery pack is fully charged. Read all safety precautions.

IMPORTANT

Charge the battery pack only in temperatures that are within the appropriate range; refer to Specifications, page 3–6.

Note: At any time, press the battery-charge-indicator button on the battery pack to display the current charge (LED indicators).

1. Ensure that the vents on the battery pack and charger are clear of any dust and debris.

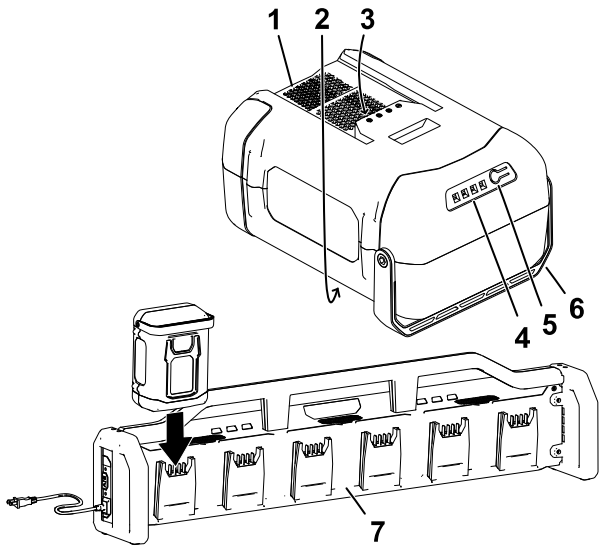

G505617s

1. Battery pack cavity
2. Battery pack venting areas
3. Battery pack terminals
4. Battery-charge-indicator button
5. LED indicators (current charge)
6. Handle
7. Charger

Charging the Battery Packs (continued)

2. Line up the cavity in the battery pack with the tongue on the charger.
3. Slide the battery pack into the charger until it is fully seated
4. Wait for the battery pack(s) to charge. Refer to the following table to interpret the LED indicator light on the battery charger.

Indicator light	Indicates
Off	No battery pack inserted
Yellow	Battery pack is on standby while other battery pack(s) are charging
Green blinking	Battery pack is charging
Green	Battery pack is charged
Red	Battery pack and/or battery charger is over or under the appropriate temperature range
Red blinking	Battery pack charging fault; refer to Troubleshooting

If multiple battery packs are connected to the charger, you can switch between 2 charging modes by pressing the A/B button on the side of the charger.

- Sequential Rapid charging (Mode A): Fully charges 1 battery pack at a time; once fully charged, the next battery starts charging. This results in individual fully-charged batteries faster.
- Parallel charging (Mode B): All connected battery packs are charged in parallel, to the same level. This results in all connected batteries being evenly charged.

Note: During normal operation, a fan sound is audible from the charger while the battery packs is charging.

IMPORTANT

The battery can be left on the charger for short periods between uses.

If the battery will not be used for longer periods, remove the battery from the charger.

5. To remove the battery pack, slide the battery pack out of the charger.

Hauling the Machine

Use a heavy-duty trailer or truck to haul the machine. Use a full-width ramp. Ensure that the trailer or truck has all the necessary brakes, lighting, and marking as required by law. Please carefully read all the safety instructions. Knowing this information could help you or bystanders avoid injury. Refer to your local ordinances for trailer and tie-down requirements.

⚠ WARNING ⚠

Driving on the street or roadway without turn signals, lights, reflective markings, or a slow-moving-vehicle emblem is dangerous and can lead to accidents causing personal injury.

Do not drive the machine on a public street or roadway.

Trailer Requirements

⚠ WARNING ⚠

Loading a machine onto a trailer or truck increases the possibility of tip-over and could cause serious injury or death.

- **Use only a full-width ramp; do not use individual ramps for each side of the machine.**
- **Do not exceed a 15-degree angle between the ramp and the ground or between the ramp and the trailer or truck.**
- **Ensure that the length of ramp is at least 4 times as long as the height of the trailer or truck bed to the ground.**

Hauling the Machine (continued)

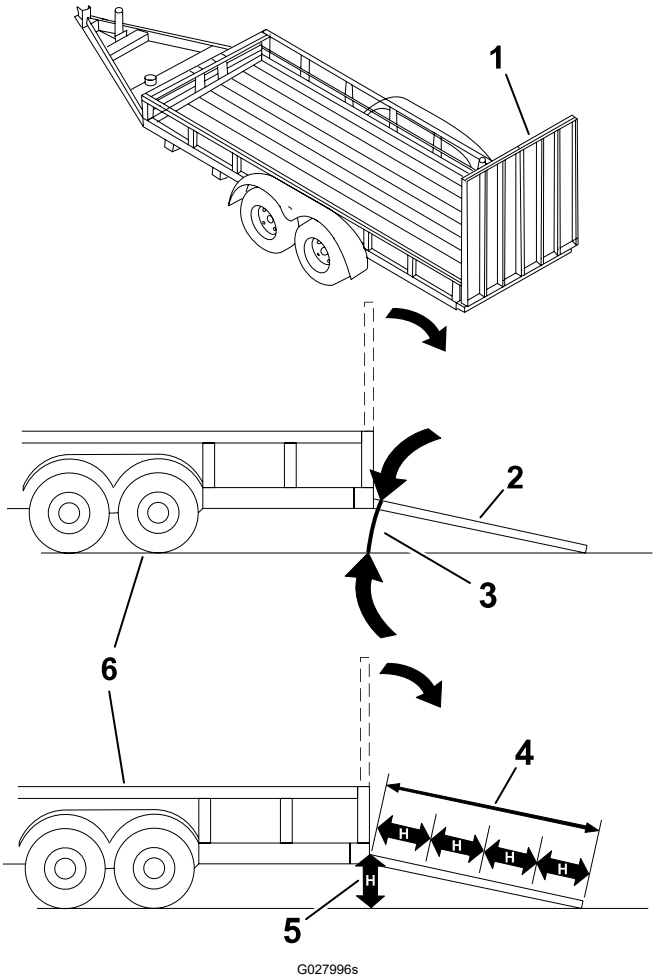

(1) Full-width ramp(s) in stowed position

(2) Side view of full-width ramp in loading position

(3) Not greater than 15 degrees

(4) Ramp is at least 4 times as long as the height of the trailer or truck bed to the ground

(5) H = height of the trailer or truck bed to the ground

(6) Trailer

Loading the Machine

⚠ WARNING ⚠

Loading a machine onto a trailer or truck increases the possibility of tip-over and could cause serious injury or death.

- **Use extreme caution when operating a machine on a ramp.**
- **Back the machine up the ramp and drive it forward down the ramp.**
- **Avoid sudden acceleration or deceleration while driving the machine on a ramp as this could cause a loss of control or a tip-over situation.**

---

1. If using a trailer, connect it to the towing vehicle and connect the safety chains.
2. If applicable, connect the trailer brakes.
3. Lower the ramp, ensuring that the angle between the ramp and the ground does not exceed 15 degrees.

Hauling the Machine (continued)

4. Back the machine up the ramp.
5. Shut off the machine, remove the key, and engage the parking brake.

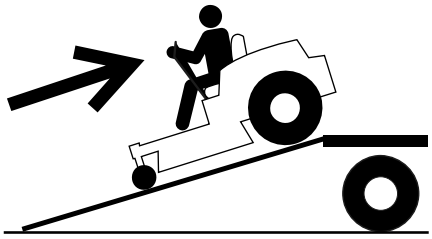

G414592

6. Tie down the machine using straps, chains, cable, or ropes. Refer to local regulations for tie-down requirements.

   Note: Ensure to tie down the battery box so that it does not open during transport.

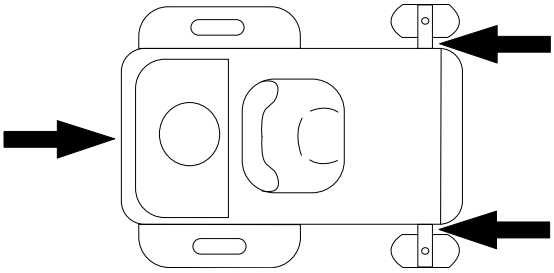

G027708s

Unloading the Machine

1. Lower the ramp, ensuring that the angle between the ramp and the ground does not exceed 15 degrees.
2. Drive the machine forward down the ramp.

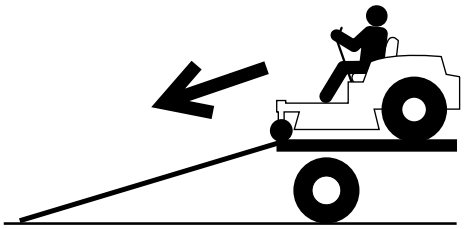

G414593

Maintenance Safety

⚠ WARNING ⚠

Modifying the original machine, parts, and/or accessories may alter the warranty, controllability, and safety of the machine. Making unauthorized modifications to the original machine and/or not using genuine Exmark parts could lead to serious injury or death.

- **Do not make unauthorized modifications to the machine, parts, and/or accessories.**
- **Use only genuine Exmark parts.**

- Before adjusting, cleaning, servicing, or leaving the machine, do the following:
  - Park the machine on a level surface.
  - Disengage the drives and the power take-off.
  - Engage the parking brake.
  - Shut off the machine and remove the key.
  - Wait for all moving parts to stop.
  - Allow machine components to cool.
- Carefully release pressure from components with stored energy.
- Check the parking brake operation frequently. Service the brake as needed.
- Never tamper with safety devices. Check their proper operation regularly.
- Do not rely solely on mechanical or hydraulic jacks to support the machine; support the machine with jack stands whenever you raise the machine.
- Use care when checking the blades. Wrap the blades or wear gloves, and use caution when servicing the blades. Only replace or sharpen the blades; never straighten or weld them.
- On multi-bladed machines, take care as rotating one blade can cause other blades to rotate.
- Keep your hands and feet away from hot surfaces.
- Keep all hardware tightened, especially the blade-attachment hardware.

Recommended Maintenance Schedule

Maintenance Service Interval	Maintenance Procedure
After the first 50 hours	Check the lug-nut torque.
Before each use or daily	Check the safety-interlock system.
	Inspect the blades.
	Inspect the grass deflector for damage.
After each use	Clean grass and debris from the machine.
Every 25 hours	Check the tire pressure.
	Check the battery box filter; replace as needed.
Yearly	Check the lug-nut torque.
Before storage	Perform all maintenance procedures listed above before storage.
	Paint any chipped surfaces.

Pre-Maintenance Procedures

Moving a Non-Functioning Machine

1. Park the machine on a level surface and disengage the blade-control switch (PTO).
2. Shut off the machine and remove the key.
3. Remove the battery packs from the machine.
4. Ensure that the parking brake is disengaged.

⚠ WARNING ⚠

The machine could unintentionally move while the parking brake is disengaged and injure you or bystanders.

Engage the parking brake after moving the machine.

5. Push the machine as required.

IMPORTANT

Always push the machine at a slow walking speed; do not tow. Moving the machine at a faster speed may damage it.

If the display powers on while you push the machine, move the machine at a slower speed.

6. Engage the parking brake.

Raising the Machine

Use jackstands to support the machine when you raise it.

⚠ WARNING ⚠

Supporting the machine on the transaxle or motor may damage them and cause the machine to fall, injuring you or bystanders.

Do not use the transaxle or motor to lift or support the machine.

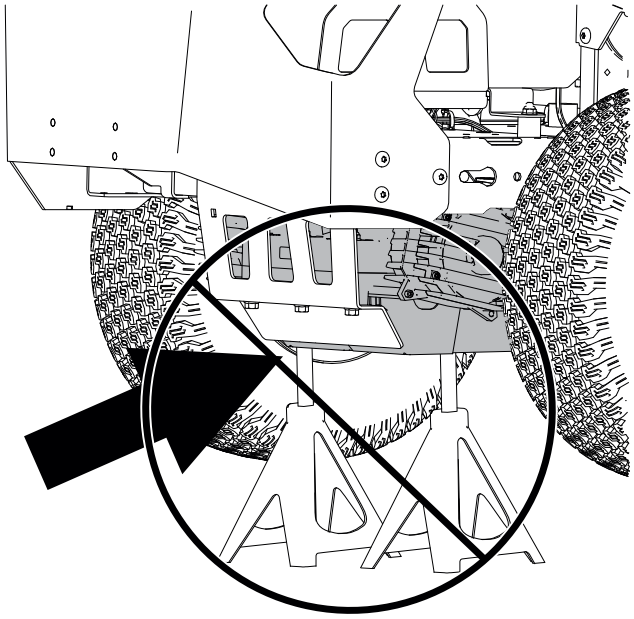

G454948

Electrical System Maintenance

Preparing the Battery Pack for Recycling

IMPORTANT

Upon removal, cover the terminals of the battery pack with heavy-duty adhesive tape. Do not attempt to destroy or disassemble the battery pack or remove any of its components.

RECYCLE RBRC Li-ion 1.800.822.8837	Lithium-ion battery packs labeled with the Call2Recycle seal can be recycled at any participating retailer or battery recycling facility in the Call2Recycle program (US and Canada only). To locate a participating retailer or facility closest to you, please call 1-800-822-8837 or visit www.call2recycle.org. If you cannot locate a participating retailer or facility nearby, or if your rechargeable battery is not labeled with the Call2Recycle seal, please contact your local municipality for more information on how to responsibly recycle the battery. If you are located outside of the US and Canada, please contact your Authorized Service Dealer.

Checking the Battery-Box Filter

1. Park the machine on a level surface, disengage the blade-control switch (PTO), and engage the parking brake.
2. Shut off the machine and remove the key.
3. Open the battery box filter cover behind the seat.
4. Clean the filter by tapping it gently to remove dust.

   Note: If it is very dirty or damaged, replace the filter with a new one.
5. Install the filter.
6. Install the filter cover.

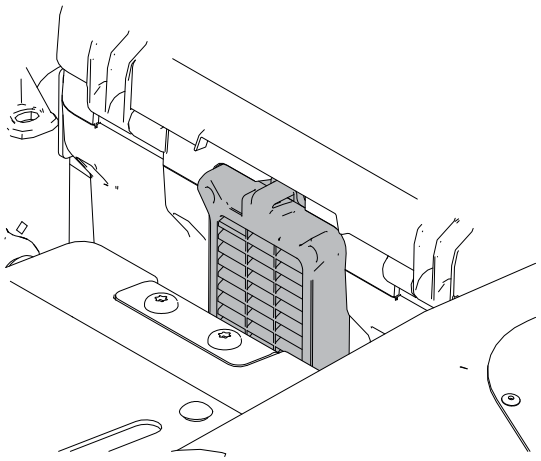

G455145

Drive System Maintenance

Checking the Tire Pressure

Maintain the air pressure in the front and rear tires as specified. Uneven tire pressure can cause an uneven cut. Check the pressure at the valve stem when the tires are cold to get the most accurate pressure reading.

1. Inflate the front caster wheel tires to 206 kPa (30 psi) or the pressure indicated on the sidewall, whichever is lower.
2. Inflate the rear drive-wheel tires to 90 kPa (13 psi).

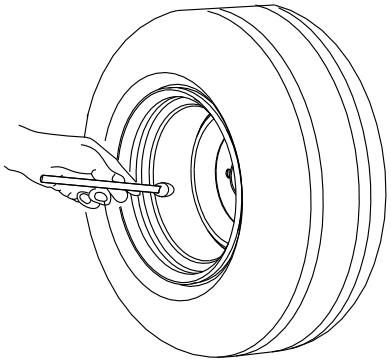

G441539

Checking the Wheel Lug Nuts

Check and torque the wheel lug nuts to **108 N·m (80 ft-lb)**.

Adjusting the Tracking

When driving the machine forward full speed across a flat, level surface, if the machine pulls to 1 side, adjust the tracking.

Note: You can adjust the tracking only for driving forward.

1. Park the machine on a level surface, disengage the blade-control switch (PTO), and engage the parking brake.
2. Shut off the machine, remove the key, and wait for all moving parts to stop before leaving the operating position.
3. Raise the seat.
4. Rotate the tracking-adjustment bolt near the lever that needs adjusting.

   Note: This decreases the speed for that wheel. Rotate the bolt a small amount to make minor adjustments.

Adjusting the Tracking (continued)

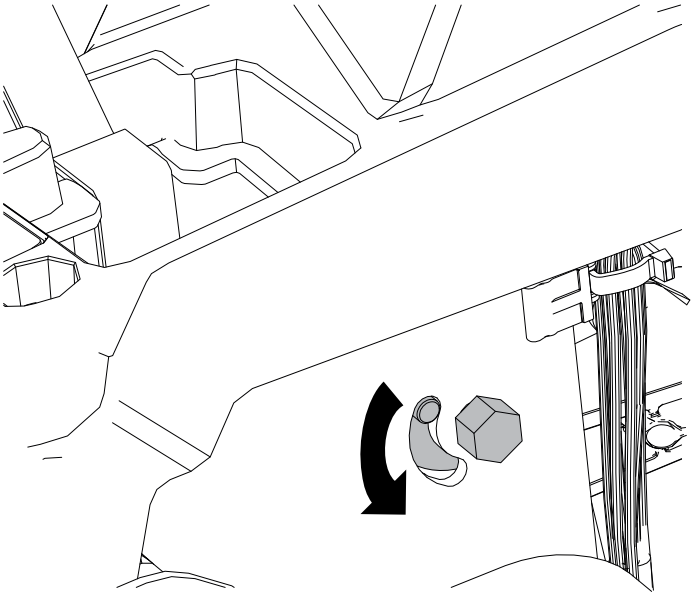

G447992

5. Lower the seat.
6. Start the machine and drive it forward across a flat, level surface with both motion-control levers fully forward to verify that the machine tracks straight. Repeat the procedure as needed.

Mower-Deck Maintenance

Blade Service

To ensure a superior quality of cut, keep the blades sharp. For convenient sharpening and replacement, keep extra blades on hand.

Replace the blades if they hit a solid object, or if the blade is out of balance or bent.

Before Inspecting or Servicing the Blades

1. Park the machine on a level surface, disengage the blade-control switch (PTO), and engage the parking brake.
2. Shut off the machine, remove the key, and wait for all moving parts to stop before leaving the operating position.
3. Remove the battery packs from the machine.

Checking for Bent Blades

The machine must be on a level surface for this procedure.

1. Raise the mower deck to the highest height-of-cut position.
2. While wearing thickly padded gloves, or other adequate hand protection, slowly rotate the blade into a position that allows you to measure the distance between the cutting edge and the level surface.

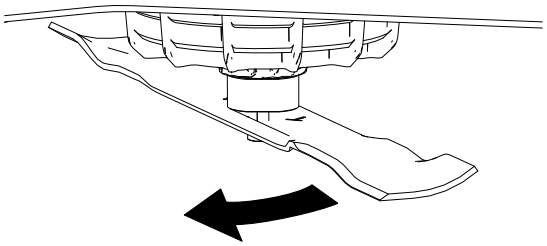

G447262

3. Measure from the tip of the blade to the level surface.

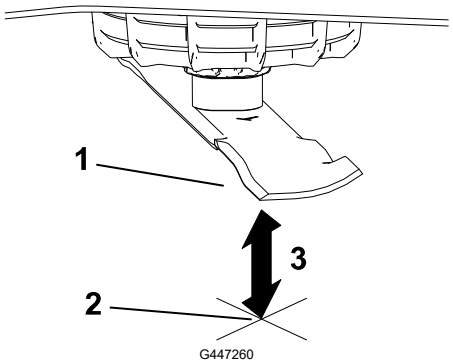

G447260

(1) Blade (in position for measuring)

(2) Level surface

(3) Measured distance between blade and the surface (A)

4. Rotate the same blade 180 degrees so that the opposite blade edge is now in the same position.

Blade Service (continued)

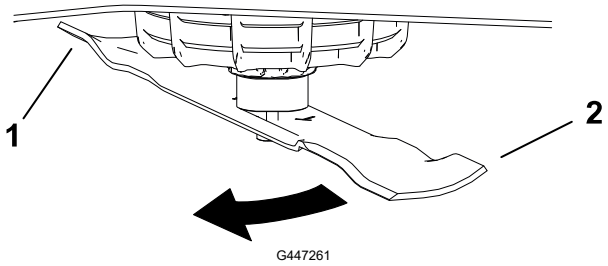

1. Blade edge previous measured
2. Opposite blade edge

5. Measure from the tip of the blade to the level surface.

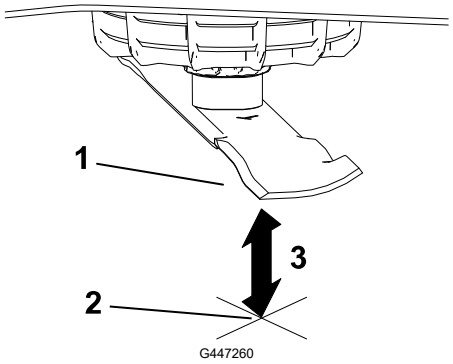

1. Blade (in position for measuring)
2. Level surface
3. Measured distance between blade and the surface (B)

6. If the difference between A and B is greater than 3 mm (1/8 inch), replace the blade.

   Note: If you replace the blade and the difference continues to exceed 3 mm (1/8 inch), the blade motor shaft could be bent. Contact an Authorized Service Dealer for service.

7. Repeat this procedure each blade.

Removing the Blades

Replace the blades if they hit a solid object, or if the blade is out of balance or bent.

1. Hold the blade end using a rag or thickly padded glove.
2. Remove the blade as shown.

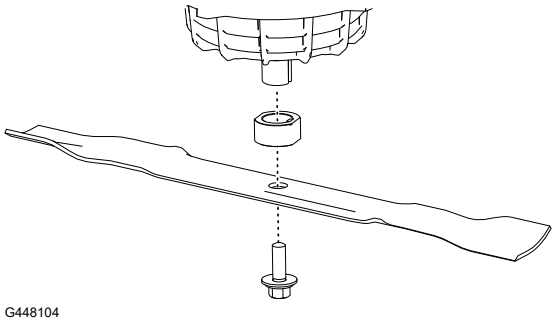

Blade Service (continued)

Sharpening the Blades

1. Use a file to sharpen the cutting edge at both ends of the blade. Ensure to maintain the original angle (1).

   Note: Remove the same amount of material from both cutting edges so that the blade retains its balance.

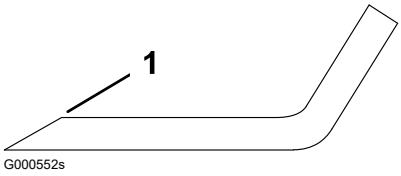

G000552s

2. Check the balance of the blade (1) by putting it on a blade balancer (2).

   Note: If the blade stays in a horizontal position, the blade is balanced and can be used.

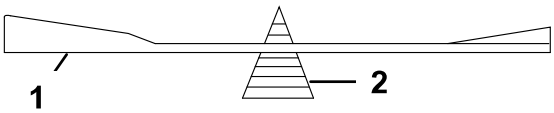

G000553s

   If the blade is not balanced, file some metal off the end of the sail area only.

3. Repeat this procedure until the blade is balanced.

Installing the Blades

⚠ WARNING ⚠

Operating a machine after incorrectly installing the blade assembly and/or not using genuine Exmark blade and blade hardware could allow a blade or blade component to be thrown out from under the deck, resulting in serious injury or death.

Always install genuine Exmark blades and blade hardware according to the instructions.

---

1. Install the blade as shown.

   Note: The curved part of the blade must be pointing upward toward the inside of the mower to ensure proper cutting.

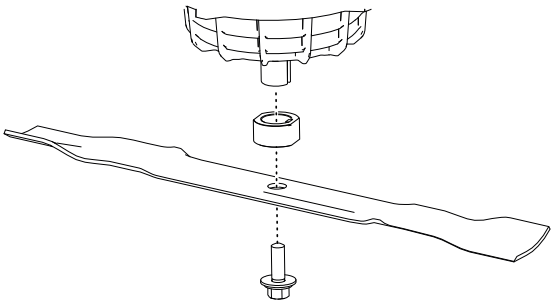
G448104

2. Torque the blade bolt to **81 to 108 N·m (60 to 80 ft-lb)**.

Leveling the Mower Deck

Ensure that the mower deck is level any time you install the mower deck or when you see an uneven cut on your lawn.

Preparing to Level the Mower Deck

1. Park the machine on a level surface, disengage the blade-control switch (PTO), and engage the parking brake.
2. Shut off the machine, remove the key, and wait for all moving parts to stop before leaving the operating position.
3. Remove the battery packs from the machine.
4. Ensure that the tires are inflated to the correct specifications and the caster wheels are facing straight forward.
5. Check the mower deck for bent blades; remove and replace any bent blades.
6. Raise the mower deck to the 76 mm (3 inch) height-of-cut setting.

Checking the Mower-Deck Level

1. Position the blades side-to-side.
2. Measure at locations Ⓐ and Ⓑ from a level surface to the cutting edge of the blade tips ①.

   The difference between the measurements should be no more than 5 mm (3/16 inch). If the measurement is larger, adjust the side-to-side level.

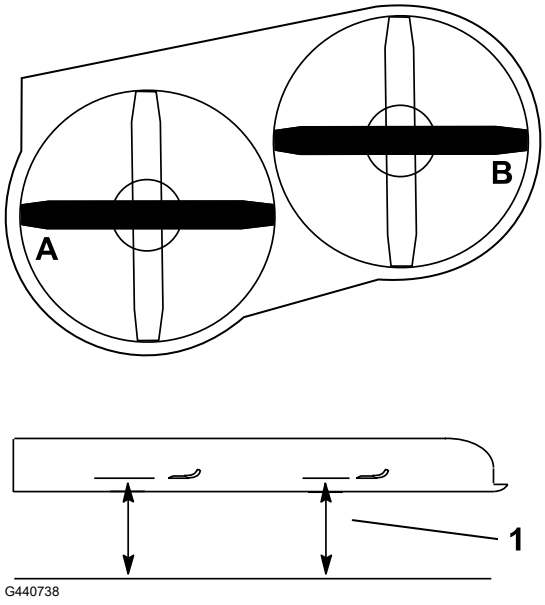

Leveling the Mower Deck (continued)

3. Position 1 blade front-to-rear.
4. Measure at locations (A) and (B) from a level surface to the cutting edge of the blade tips (1).

   The front blade tip should be 1.6 to 7.9 mm (1/16 to 5/16 inch) lower than the rear blade tip. If the measurement is not correct, adjust the front-to-rear level.

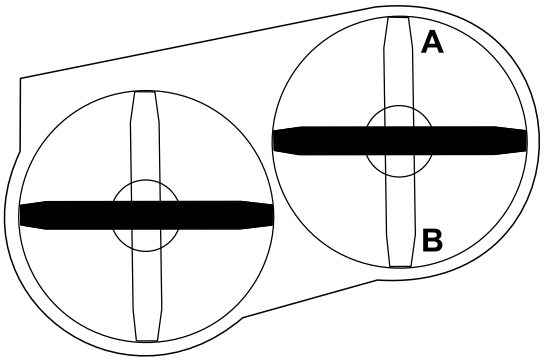

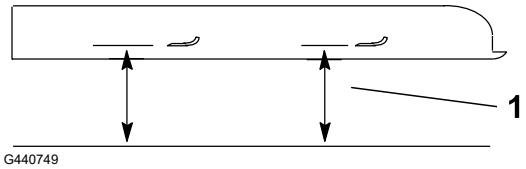

Leveling the Mower Deck

1. Set the anti-scalp rollers to the top holes or remove them completely for this procedure.
2. Set the height-of-cut lever to the 76 mm (3 inch) position.
3. Place 2 blocks, each having a thickness of 6.6 cm (2-5/8 inches), under each side of the front edge of the deck.

IMPORTANT

Do not place the blocks under the anti-scalp roller brackets.

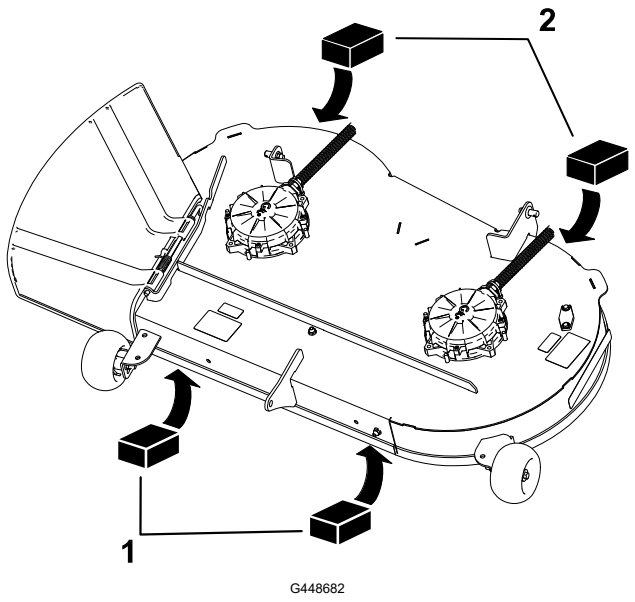

(1) Block—6.6 cm (2-5/8 inches)

(2) Block—7.3 cm (2-7/8 inches)

Leveling the Mower Deck (continued)

4. Place 2 blocks, each having a thickness of 7.3 cm (2-7/8 inches), under each side of the rear edge of the cutting deck skirt.
5. Adjust the side-to-side level as necessary:
   A. Remove the hairpin cotter and washer from the left lower lift-arm pin.

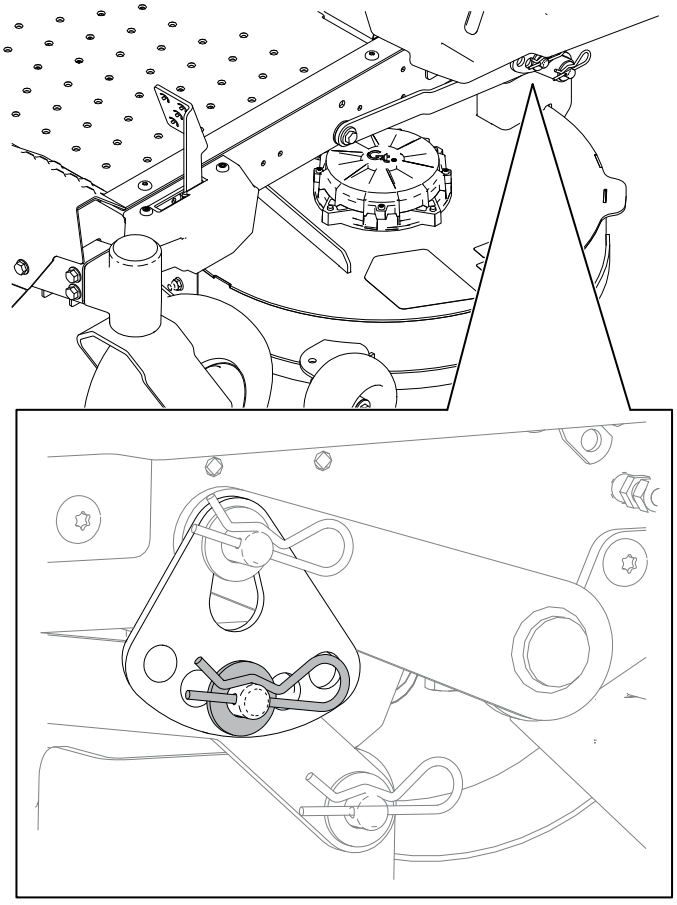

G448684

   B. Rotate the height-of-cut plate to a different hole so that it supports the weight of the mower deck after you install the plate.

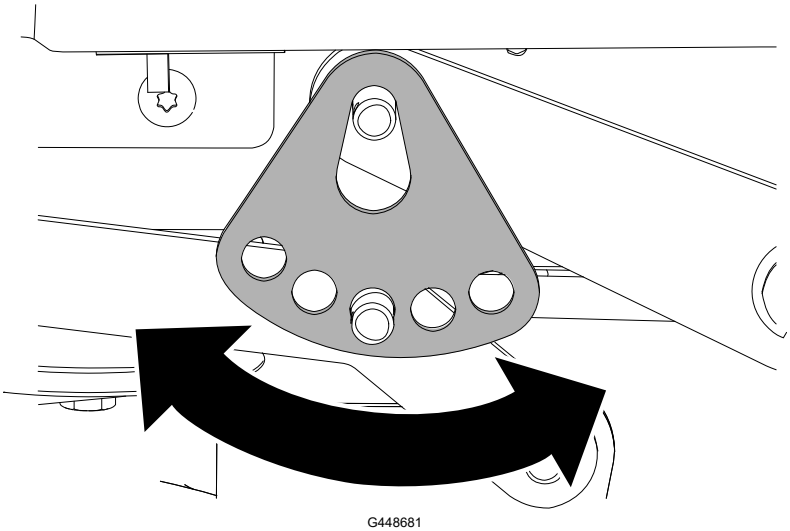

G448681

   C. Install the washer and hairpin cotter.

Leveling the Mower Deck (continued)

D. Repeat the adjustment for the other side of the machine.

E. Check the side-to-side level and adjust it again until the measurements are correct.

6. Adjust the front-to-rear level as necessary:

   A. Rotate the adjustment nut in the front of the mower deck.

      To raise the front of the deck, tighten the adjustment nut; lower the front of the deck, loosen the adjustment nut.

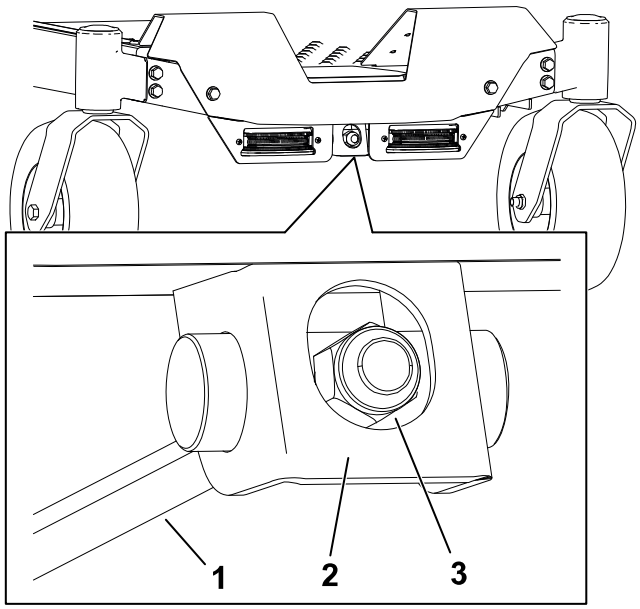

G448683

   B. Check the front-to-rear level and adjust it again until the measurements are correct.

7. Verify that the deck is level and make further adjustments as needed.

Brake Maintenance

Testing the Parking Brake

1. Start the machine.
2. Slowly drive the machine forward on level ground and engage the parking brake while moving.
3. Verify that the machine stops moving and the parking brake icon appears on the information display, then move the levers to neutral.


G427902

4. Slowly attempt to drive the machine forward or rearward.
5. Verify that the parking brake icon remains on the information display and that the machine does not move.

   If the icon does not display or the machine moves while the parking brake is engaged, contact an Authorized Service Dealer.

Cleaning

Cleaning Under the Mower Deck

Clean the underside of the mower deck after each use to prevent grass buildup for improved mulch action and clipping dispersal.

IMPORTANT

Do not use water to clean the mower deck, otherwise you could damage the electric motors.

⚠ WARNING ⚠

Using compressed air improperly to clean the machine could result in serious injury.

- **Wear appropriate personal protective equipment, such as eye protection, hearing protection, and a dust mask.**
- **Do not aim compressed air at any part of your body or at anyone else.**
- **Refer to the manufacturer's instructions for the air compressor for operating and safety information.**

1. Park the machine on a level surface, disengage the blade-control switch (PTO), and engage the parking brake.
2. Shut off the machine and remove the key.
3. Remove the battery packs from the machine.
4. Raise the front of the machine and use jack stands to support the mower.
5. Scrape debris from the machine or remove it using compressed air.

Storing the Machine

Store the machine, battery pack, and charger only in temperatures that are within the appropriate range; refer to Specifications, page 3–6.

1. Park the machine on a level surface, disengage the blade-control switch (PTO), and engage the parking brake.
2. Shut off the machine, remove the key, and wait for all moving parts to stop before leaving the operating position.
3. Remove the battery packs from the machine.
4. Remove grass clippings, dirt, and grime from the external parts of the entire machine, especially the traction and blade motors, battery compartment, and underside of the machine.
5. Check the parking brake operation.
6. Check the tire pressure.
7. Charge the batteries.

IMPORTANT

If you are storing the battery packs for a year or longer, charge them until 1 or 2 LED indicators turn green on the batteries. Do not store a fully charged or fully depleted battery. When you are ready to use the machine again, charge the battery packs until the left indicator light turns green on the charger or all 4 LED indicators turn green on the batteries.

8. Scrape any heavy buildup of grass and dirt from the underside of the mower.
9. Check the condition of the blades.
10. Check and tighten all fasteners. Repair or replace any part that is damaged.
11. Paint all scratched or bare metal surfaces. Paint is available from your Authorized Service Dealer.
12. Store the machine in a clean, dry garage or storage area. Remove the key from the switch and keep it out of reach of children or other unauthorized users. Cover the machine to protect it and keep it clean.

Machine Troubleshooting

The machine vibrates abnormally

Possible Cause	Corrective Action
The cutting blade(s) is/are bent or unbalanced.	Install new cutting blade(s).
The blade mounting bolt is loose.	Tighten the blade mounting bolt.
The blade spindle is bent.	Contact an Authorized Service Dealer.
A motor mount is loose or worn.	Contact an Authorized Service Dealer.

The cutting height is uneven.

Possible Cause	Corrective Action
The blade(s) is not sharp.	Sharpen the blade(s).
A cutting blade(s) is/are bent.	Install a new cutting blade(s).
The mower is not level.	Level the mower from side-to-side and front-to-rear.
An anti-scalp roller (if applicable) is not set correctly.	Adjust the anti-scalp wheel height.
The underside of the mower deck is dirty.	Clean the underside of the mower deck.
The tire pressure is incorrect.	Adjust the tire pressure.
A blade spindle is bent.	Contact an Authorized Service Dealer.
A blade motor is not functioning properly.	Contact an Authorized Service Dealer.

The blades do not rotate.

Possible Cause	Corrective Action
The blade-control switch is faulty.	Contact an Authorized Service Dealer.

Battery and Charger Troubleshooting

The battery system loses charge quickly.

Possible Cause	Corrective Action
The battery system is over or under the appropriate temperature range.	Move the machine to a location where it is dry and the temperature is within the range indicated in Specifications.
The battery system is not using all installed battery packs.	When the machine is on, check the LED light next to each battery pack to ensure it is active. For any inactive battery packs, ensure they are seated properly and all batteries have the same charge level.

A battery LED light on the machine does not illuminate.

Possible Cause	Corrective Action
The battery pack is not seated correctly in the battery box.	Ensure the battery pack is seated properly.
The battery pack is at a lower charge level than the active battery packs.	Charge the battery pack to the same level as the active batteries. **Note:** The machine uses all battery packs simultaneously only if they have the same charge level; otherwise, it uses the battery packs with the highest charge until they reach the same charge level as other battery packs.

The battery charger is not working.

Possible Cause	Corrective Action
The battery charger is over or under the appropriate temperature range.	Unplug the battery charger and move it to a location where it is dry and the temperature is within the range indicated in Specifications.
The outlet that the battery charger is plugged into does not have power.	Contact your licensed electrician to repair the outlet.

The LED indicator light on the battery charger is red.

Possible Cause	Corrective Action
The battery charger and/or battery pack is over or under the appropriate temperature range.	Unplug the battery charger and move the battery charger and battery pack to a location where it is dry and the temperature is within the range indicated in Specifications.

The LED indicator light on the battery charger is blinking red.

Possible Cause	Corrective Action
There is an error in the communication between the battery pack and the charger.	1. Remove the battery pack from the battery charger, unplug the battery charger from the outlet, and wait 10 seconds. 2. Plug the battery charger into the outlet again and place the battery pack on the battery charger. If the LED indicator light on the battery charger is still blinking red, repeat this procedure again. If the LED indicator light on the battery charger is still blinking red after 2 attempts and the battery is within the warranty period, contact an Authorized Service Dealer. Otherwise, properly dispose of the battery pack at a battery recycling facility.
The battery pack is weak.	If the battery is within the warranty period, contact an Authorized Service Dealer. Otherwise, properly dispose of the battery pack at a battery recycling facility.

The tool does not run or does not run continuously.

Possible Cause	Corrective Action
There is moisture on the leads of the battery pack.	Allow the battery pack to dry or wipe it dry.
The battery is not fully installed into the tool.	Remove and then replace the battery into the tool making sure that it is fully installed and latched.

Display Error and Fault Code Troubleshooting

Before diagnosing an error, shut off the machine, remove the key, and remove the batteries.

Error Icons

Icon	Description	Corrective Action
	The battery temperature is too high.	1. Shut off the machine, remove the battery, and wait for the battery to cool. 2. Operate the machine in the appropriate temperature range.
	The battery load is too high.	Reduce the load on the machine.
	The motor temperature is too high.	1. Shut off the machine and allow it to cool before starting it again. 2. Operate the machine in the appropriate temperature range.
	The motor load is too high.	Reduce the load on the machine.
	Fault code	Refer to the following tables.

Fault codes appear on the information display as shown.

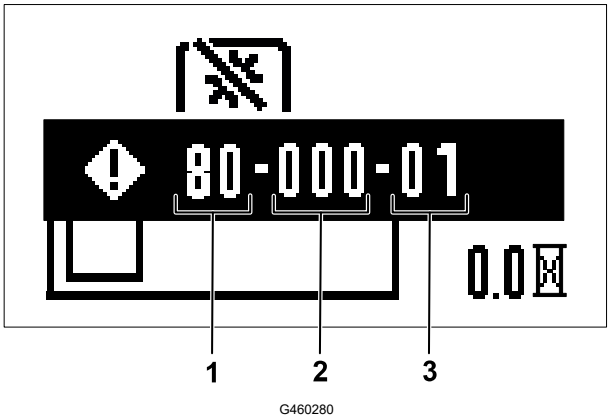

G460280

1. System
2. Last 3 digits of the controller serial number
3. Fault code

Identify the system of the fault using the first 2 digits of the code and the first table, then identify the fault using the last 2 digits of the code and the table of the appropriate system. The middle 3 digits correspond to the last 3 digits of the controller serial number, which may help determine which motor is sending the fault.

Note: The serial number does not display for PMU faults and shows `000` instead.

System for Fault

First 2 Digits of Code	System
60	Power management unit (PMU)—battery box
80	Primary controller
81	Left traction motor
82	Right traction motor
83, 84, or 85	Blade motor

Power Management Unit (PMU) Faults

Last 2 Digits of Code	Fault Description	Corrective Action
60-XXX-66	There is a PMU precharge failure.	Restart the machine; if issues persist, contact an Authorized Service Dealer.
60-XXX-69	There is a PMU failure.	Restart the machine; if issues persist, contact an Authorized Service Dealer.
60-XXX-71	Battery 1 has indicated a relay failure.	1. Ensure that the battery is installed properly. 2. Remove and charge the battery. Install the battery. 3. If issues persist, replace the battery or contact an Authorized Service Dealer.
60-XXX-72	Battery 2 has indicated a relay failure.	1. Ensure that the battery is installed properly. 2. Remove and charge the battery. Install the battery. 3. If issues persist, replace the battery or contact an Authorized Service Dealer.
60-XXX-73	Battery 3 has indicated a relay failure.	1. Ensure that the battery is installed properly. 2. Remove and charge the battery. Install the battery. 3. If issues persist, replace the battery or contact an Authorized Service Dealer.
60-XXX-74	Battery 4 has indicated a relay failure.	1. Ensure that the battery is installed properly. 2. Remove and charge the battery. Install the battery. 3. If issues persist, replace the battery or contact an Authorized Service Dealer.
60-XXX-75	Battery 5 has indicated a relay failure.	1. Ensure that the battery is installed properly.

Power Management Unit (PMU) Faults (continued)

Last 2 Digits of Code	Fault Description	Corrective Action
		2. Remove and charge the battery. Install the battery. 3. If issues persist, replace the battery or contact an Authorized Service Dealer.
60-XXX-76	Battery 6 has indicated a relay failure.	1. Ensure that the battery is installed properly. 2. Remove and charge the battery. Install the battery. 3. If issues persist, replace the battery or contact an Authorized Service Dealer.
60-XXX-77	There is a positive metal-oxide-semiconductor (MOS) failure in the PMU.	Contact an Authorized Service Dealer.
60-XXX-79	A motor braking component is too hot	1. Shut off the machine and allow it to cool before starting it again. 2. Operate the machine in the appropriate temperature range.
60-XXX-80	Battery 1 is too hot.	1. Shut off the machine, remove the battery, and wait for the battery to cool. 2. Operate the machine in the appropriate temperature range.
60-XXX-81	Battery 2 is too hot.	1. Shut off the machine, remove the battery, and wait for the battery to cool. 2. Operate the machine in the appropriate temperature range.
60-XXX-82	Battery 3 is too hot.	1. Shut off the machine, remove the battery, and wait for the battery to cool. 2. Operate the machine in the appropriate temperature range.
60-XXX-83	Battery 4 is too hot.	1. Shut off the machine, remove the battery, and wait for the battery to cool. 2. Operate the machine in the appropriate temperature range.
60-XXX-84	Battery 5 is too hot.	1. Shut off the machine, remove the battery, and wait for the battery to cool. 2. Operate the machine in the appropriate temperature range.

Power Management Unit (PMU) Faults (continued)

Last 2 Digits of Code	Fault Description	Corrective Action
60-XXX-85	Battery 6 is too hot.	1. Shut off the machine, remove the battery, and wait for the battery to cool. 2. Operate the machine in the appropriate temperature range.
60-XXX-86	There is a failure with battery 1 or the battery-charge level is too low.	1. Ensure that the battery is installed properly. 2. Remove and charge the battery. Install the battery. 3. If issues persist, replace the battery or contact an Authorized Service Dealer.
60-XXX-87	There is a failure with battery 2 or the battery-charge level is too low.	1. Ensure that the battery is installed properly. 2. Remove and charge the battery. Install the battery. 3. If issues persist, replace the battery or contact an Authorized Service Dealer.
60-XXX-88	There is a failure with battery 3 or the battery-charge level is too low.	1. Ensure that the battery is installed properly. 2. Remove and charge the battery. Install the battery. 3. If issues persist, replace the battery or contact an Authorized Service Dealer.
60-XXX-89	There is a failure with battery 4 or the battery-charge level is too low.	1. Ensure that the battery is installed properly. 2. Remove and charge the battery. Install the battery. 3. If issues persist, replace the battery or contact an Authorized Service Dealer.
60-XXX-90	There is a failure with battery 5 or the battery-charge level is too low.	1. Ensure that the battery is installed properly. 2. Remove and charge the battery. Install the battery. 3. If issues persist, replace the battery or contact an Authorized Service Dealer.
60-XXX-91	There is a failure with battery 6 or the battery-charge level is too low.	1. Ensure that the battery is installed properly. 2. Remove and charge the battery. Install the battery. 3. If issues persist, replace the battery or contact an Authorized Service Dealer.

Power Management Unit (PMU) Faults (continued)

Last 2 Digits of Code	Fault Description	Corrective Action
60-XXX-92	There is a PMU failure.	Ensure that the battery is fully seated in the slot; if issues persist, contact an Authorized Service Dealer.
60-XXX-93	There is a PMU failure.	Ensure that the battery is fully seated in the slot; if issues persist, contact an Authorized Service Dealer.
60-XXX-94	The PMU system is too hot.	1. Shut off the machine and allow it to cool before starting it again. 2. Operate the machine in the appropriate temperature range.
60-XXX-95	The PMU communication timed out.	Ensure that the battery is fully seated in the slot; if issues persist, contact an Authorized Service Dealer.

Primary Controller Faults

Code	Fault Description	Corrective Action
80-XXX-01	There is no controller area network (CAN) signal for the left traction controller.	Check for loose connections; if issues persist, contact an Authorized Service Dealer.
80-XXX-02	There is no CAN signal for the right traction controller.	Check for loose connections; if issues persist, contact an Authorized Service Dealer.
80-XXX-07	A fault occurred in the left motion-control sensor.	Check for loose connections; if issues persist, contact an Authorized Service Dealer.
80-XXX-08	A fault occurred in the right motion-control sensor.	Check for loose connections; if issues persist, contact an Authorized Service Dealer.
80-XXX-10	There is no CAN signal for the blade controller (refer to the serial number to identify location).	Check for loose connections; if issues persist, contact an Authorized Service Dealer.
80-XXX-11	There is no CAN signal for the blade controller (refer to the serial number to identify location).	Check for loose connections; if issues persist, contact an Authorized Service Dealer.
80-XXX-12	There is an issue with the firmware version compatibility.	Contact an Authorized Service Dealer for a software update.
80-XXX-19	A fault occurred in the DC-DC power converter.	Contact an Authorized Service Dealer.
80-XXX-22	There is a microcontroller unit (MCU) memory error.	Contact an Authorized Service Dealer.
80-XXX-26	There is no CAN signal for the blade controller (refer to the serial number to identify location).	Check for loose connections; if issues persist, contact an Authorized Service Dealer.

Primary Controller Faults (continued)

Code	Fault Description	Corrective Action
80-XXX-27	There is an MCU hardware error.	Contact an Authorized Service Dealer.
80-XXX-28	There is an MCU flash data validation error.	Contact an Authorized Service Dealer.
80-XXX-29	There is an MCU non-maskable interrupt error.	Contact an Authorized Service Dealer.
80-XXX-30	There is an MCU error.	Contact an Authorized Service Dealer.
80-XXX-31	There is a voltage reference error.	Contact an Authorized Service Dealer.

Traction/Blade Motor Controller Faults

Code	Fault Description	Corrective Action
81-XXX-00 82-XXX-00 83-XXX-00 84-XXX-00 85-XXX-00	There is a hall signal error.	Contact an Authorized Service Dealer.
81-XXX-01 82-XXX-01 83-XXX-01 84-XXX-01 85-XXX-01	The hall signal sequence is abnormal.	Contact an Authorized Service Dealer.
81-XXX-02 82-XXX-02 83-XXX-02 84-XXX-02 85-XXX-02	The controller started abnormally.	Contact an Authorized Service Dealer.
81-XXX-07 82-XXX-07 83-XXX-07 84-XXX-07 85-XXX-07	The motor rotor is locked.	Clear any obstructions; if issues persist, contact an Authorized Service Dealer.
81-XXX-10 82-XXX-10 83-XXX-10 84-XXX-10	The motor rotor operates too fast.	Contact an Authorized Service Dealer.

Traction/Blade Motor Controller Faults (continued)

Code	Fault Description	Corrective Action
85-XXX-10		
81-XXX-11 82-XXX-11 83-XXX-11 84-XXX-11 85-XXX-11	There is an MCU signal error.	Contact an Authorized Service Dealer.
81-XXX-12 82-XXX-12 83-XXX-12 84-XXX-12 85-XXX-12	The motor current is too high.	Restart the machine and reduce the load; if issues persist, contact an Authorized Service Dealer.
81-XXX-17 82-XXX-17 83-XXX-17 84-XXX-17 85-XXX-17	There is a current overload.	Restart the machine and reduce the load; if issues persist, contact an Authorized Service Dealer.
81-XXX-19 82-XXX-19 83-XXX-19 84-XXX-19 85-XXX-19	There is a current short in the circuit.	Contact an Authorized Service Dealer.
81-XXX-20 82-XXX-20 83-XXX-20 84-XXX-20 85-XXX-20	There is a gate driver integrated circuit (IC) component error.	Contact an Authorized Service Dealer.
81-XXX-21 82-XXX-21 83-XXX-21 84-XXX-21 85-XXX-21	The connector on the motor phase is disconnected.	Check for loose connections; if issues persist, contact an Authorized Service Dealer.
81-XXX-22	There is an MCU memory error.	Contact an Authorized Service Dealer.

Traction/Blade Motor Controller Faults (continued)

Code	Fault Description	Corrective Action
82-XXX-22 83-XXX-22 84-XXX-22 85-XXX-22		
81-XXX-23 82-XXX-23 83-XXX-23 84-XXX-23 85-XXX-23	There is a gate driver IC initialize error.	Restart the machine; if issues persist, contact an Authorized Service Dealer.
81-XXX-25 82-XXX-25 83-XXX-25 84-XXX-25 85-XXX-25	The current ADC signal is abnormal.	Contact an Authorized Service Dealer.
81-XXX-26 82-XXX-26 83-XXX-26 84-XXX-26 85-XXX-26	The CAN signal is disconnected.	Check for loose connections; if issues persist, contact an Authorized Service Dealer.
81-XXX-27 82-XXX-27 83-XXX-27 84-XXX-27 85-XXX-27	There is an MCU hardware error.	Contact an Authorized Service Dealer.
81-XXX-28 82-XXX-28 83-XXX-28 84-XXX-28 85-XXX-28	There is a flash data validation error.	Contact an Authorized Service Dealer.
81-XXX-29 82-XXX-29 83-XXX-29	There is an MCU non-maskable interrupt error.	Contact an Authorized Service Dealer.

Traction/Blade Motor Controller Faults (continued)

Code	Fault Description	Corrective Action
84-XXX-29 85-XXX-29		
81-XXX-30 82-XXX-30 83-XXX-30 84-XXX-30 85-XXX-30	There is an MCU error.	Contact an Authorized Service Dealer.
81-XXX-31 82-XXX-31 83-XXX-31 84-XXX-31 85-XXX-31	There is a voltage reference error.	Contact an Authorized Service Dealer.

Electrical Diagram

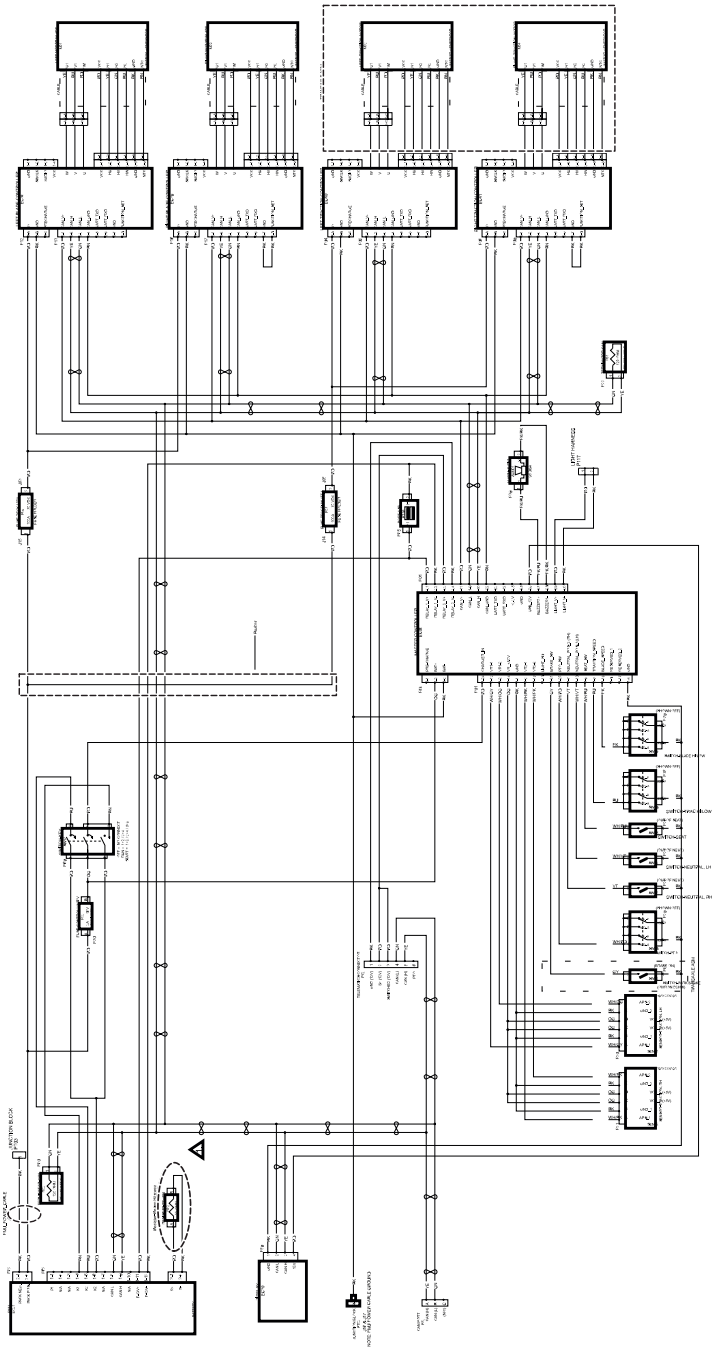

G465696

California Proposition 65 Warning Information

What is this warning?

You may see a product for sale that has a warning label like the following:



WARNING: Cancer and Reproductive Harm—www.p65Warnings.ca.gov.

What is Prop 65?

Prop 65 applies to any company operating in California, selling products in California, or manufacturing products that may be sold in or brought into California. It mandates that the Governor of California maintain and publish a list of chemicals known to cause cancer, birth defects, and/or other reproductive harm. The list, which is updated annually, includes hundreds of chemicals found in many everyday items. The purpose of Prop 65 is to inform the public about exposure to these chemicals.

Prop 65 does not ban the sale of products containing these chemicals but instead requires warnings on any product, product packaging, or literature with the product. Moreover, a Prop 65 warning does not mean that a product is in violation of any product safety standards or requirements. In fact, the California government has clarified that a Prop 65 warning "is not the same as a regulatory decision that a product is 'safe' or 'unsafe.'" Many of these chemicals have been used in everyday products for years without documented harm. For more information, go to https://oag.ca.gov/prop65/faqs-view-all.

A Prop 65 warning means that a company has either (1) evaluated the exposure and has concluded that it exceeds the "no significant risk level"; or (2) has chosen to provide a warning based on its understanding about the presence of a listed chemical without attempting to evaluate the exposure.

Does this law apply everywhere?

Prop 65 warnings are required under California law only. These warnings are seen throughout California in a wide range of settings, including but not limited to restaurants, grocery stores, hotels, schools, and hospitals, and on a wide variety of products. Additionally, some online and mail order retailers provide Prop 65 warnings on their websites or in catalogs.

How do the California warnings compare to federal limits?

Prop 65 standards are often more stringent than federal and international standards. There are various substances that require a Prop 65 warning at levels that are far lower than federal action limits. For example, the Prop 65 standard for warnings for lead is 0.5 µg/day, which is well below the federal and international standards.

Why don't all similar products carry the warning?

- Products sold in California require Prop 65 labelling while similar products sold elsewhere do not.
- A company involved in a Prop 65 lawsuit reaching a settlement may be required to use Prop 65 warnings for its products, but other companies making similar products may have no such requirement.
- The enforcement of Prop 65 is inconsistent.
- Companies may elect not to provide warnings because they conclude that they are not required to do so under Prop 65; a lack of warnings for a product does not mean that the product is free of listed chemicals at similar levels.

Why does Exmark include this warning?

Exmark has chosen to provide consumers with as much information as possible so that they can make informed decisions about the products they buy and use. Exmark provides warnings in certain cases based on its knowledge of the presence of one or more listed chemicals without evaluating the level of exposure, as not all the listed chemicals provide exposure limit requirements. While the exposure from Exmark products may be negligible or well within the "no significant risk" range, out of an abundance of caution, Exmark has elected to provide the Prop 65 warnings. Moreover, if Exmark does not provide these warnings, it could be sued by the State of California or by private parties seeking to enforce Prop 65 and subject to substantial penalties.