English

Français

Español

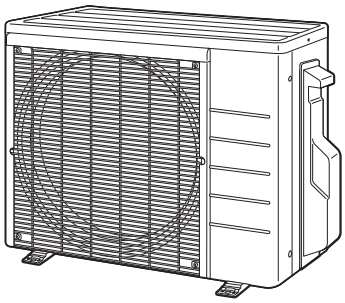

DAIKIN ROOM AIR CONDITIONER

INSTALLATION MANUAL

R32 Split Series

INVERTER

Installation manual
Manuel d'installation
Manual de instalación

MODELS

RXF09BVJU9
RXF12BVJU9
RKF09BVJU9
RKF12BVJU9
RXT09AVJU9
RXT12AVJU9

Contents

Safety Considerations 1

Accessories 3

Precautions for Selecting a Location 3

Precautions on Installation 4

Outdoor Unit Installation Diagram 4

Installation Space Requirements 5

Selecting a Location for Installation of the Indoor Units 6

Outdoor Unit Installation 7

1. Installing the outdoor unit 7
2. Drain work (Only for heat pump models) 7
3. Flaring the pipe end 7
4. Refrigerant piping 8
5. Pressure test and evacuating system 9

Wiring 10

Facility Setting (cooling at low outdoor temperature) 12

When attaching the drain pan heater (Only for heat pump models) 12

Pump Down Operation 13

Trial Operation and Testing 13

1. Trial operation and testing 13
2. Test items 13

The pictures in this document are for illustrative purposes only.

Safety Considerations

Refer also to the General Safety Considerations in the separate booklet.

	**Read the precautions in this manual carefully before operating the unit.**
	**This appliance is filled with R32.**

Read these **Safety Considerations for Installation** carefully before installing an air conditioner or heat pump. After completing the installation, make sure that the unit operates properly during the startup operation.
Instruct the user on how to operate and maintain the unit.
Inform users that they should store this installation manual with the operation manual for future reference.
Always use a licensed installer or contractor to install this product. Improper installation can result in water or refrigerant leakage, electric shock, fire, or explosion.
Meanings of **DANGER**, **WARNING**, **CAUTION**, and **NOTE** Symbols:

⚠ **DANGER** ····· Indicates an imminently hazardous situation which, if not avoided, will result in death or serious injury.

⚠ **WARNING** ····· Indicates a potentially hazardous situation which, if not avoided, could result in death or serious injury.

⚠ **CAUTION** ····· Indicates a potentially hazardous situation which, if not avoided, may result in minor or moderate injury. It may also be used to alert against unsafe practices.

⚠ **NOTE** ····· Indicates situations that may result in equipment or property damage accidents only.

⚠ DANGER

- Refrigerant gas is heavier than air and replaces oxygen. A massive leak can lead to oxygen depletion, especially in basements, and an asphyxiation hazard could occur leading to serious injury or death.
- Do not ground units to water pipes, gas pipes, telephone wires, or lightning rods as incomplete grounding can cause a severe shock hazard resulting in severe injury or death. Additionally, grounding to gas pipes could cause a gas leak and potential explosion causing severe injury or death.
- If refrigerant gas leaks during installation, ventilate the area immediately. Refrigerant gas may produce toxic gas if it comes into contact with fire. Exposure to this gas could cause severe injury or death.
- After completing the installation work, check that the refrigerant gas does not leak throughout the system.
- Do not install unit in an area where flammable materials are present due to risk of explosions that can cause serious injury or death.
- Safely dispose all packing and transportation materials in accordance with federal/state/local laws or ordinances. Packing materials such as nails and other metal or wood parts, including plastic packing materials used for transportation may cause injury or death by suffocation.
- All possible ignition sources, including cigarette smoking, should be kept sufficiently far away from the site of installation, repairing, removing and disposal.

⚠ WARNING

- Only qualified personnel licensed or certified in their jurisdiction must carry out the installation work. Installation must be done in accordance with this installation manual. Improper installation may result in water leakage, electric shock, or fire.
- Pipe-work including piping material, pipe routing, and installation shall include protection from physical damage in operation and service, and be in compliance with national and local codes and standards, such as ASHRAE 15, ASHRAE 15.2, IAPMO Uniform Mechanical Code, ICC International Mechanical Code, or CSA B52. All field joints shall be accessible for inspection prior to being covered or enclosed.
- When installing the unit in a small room, take measures to keep the refrigerant concentration from exceeding allowable safety limits. Excessive refrigerant leaks, in the event of an accident in a closed ambient space, can lead to oxygen deficiency.

- Use only specified accessories and parts for installation work. Failure to use specified parts may result in water leakage, electric shock, fire, or the unit falling.
- Install the air conditioner or heat pump on a foundation strong enough that it can withstand the weight of the unit. A foundation of insufficient strength may result in the unit falling and causing injury.
- Take into account strong winds, typhoons, or earthquakes when installing. Improper installation may result in the unit falling and causing accidents.
- Make sure that a separate power supply circuit is provided for this unit and that all electrical work is carried out by qualified personnel licensed or certified in their jurisdiction according to local, state, and national regulations. An insufficient power supply capacity or improper electrical construction may lead to electric shock or fire.
- Make sure that all wiring is secured, that specified wires are used, and that no external forces act on the terminal connections or wires. Improper connections or installation may result in fire.
- When wiring, position the wires so that the protection plate can be securely fastened. Improper positioning of the protection plate may result in electric shock, fire, or the terminals overheating.
- Before touching electrical parts, turn off the unit.
- The circuit must be protected with safety devices in accordance with local and national codes, i.e. a circuit breaker.
- Securely fasten the outdoor unit protection plate. If the protection plate is not installed properly, dust or water may enter the outdoor unit causing fire or electric shock.
- When installing or relocating the system, keep the refrigerant circuit free from substances other than the specified refrigerant (R32) such as air. Any presence of air or other foreign substance in the refrigerant circuit can cause an abnormal pressure rise or rupture, which may result in equipment damage and even injury.
- Do not change the setting of the protection devices. If the pressure switch, thermal switch, or other protection device is shorted and operated forcibly, or parts other than those specified by Daikin are used, fire or explosion may occur.
- Do not use means to accelerate the defrosting process (if possible) or to clean, other than those recommended by the manufacturer.
- The appliance must be stored in a room without continuously operating ignition sources (for example: open flames, an operating gas appliance or an operating electric heater).
- Do not pierce or burn.
- Be aware that refrigerants may not contain an odor.
- Comply with national gas regulations.
- The indoor equipment and pipes shall be securely mounted and guarded such that accidental rupture of equipment cannot occur from such events as moving furniture or reconstruction activities.

⚠ CAUTION

- Do not touch the switch with wet fingers. Touching a switch with wet fingers can cause electric shock.
- Do not allow children to play on or around the unit to prevent injury.
- Wear adequate personal protective equipment (protective gloves, safety glasses,…) when installing, maintaining or servicing the system.
- The heat exchanger fins are sharp enough to cut. To avoid injury, wear gloves or cover the fins while working around them.
- Do not touch the refrigerant pipes during and immediately after operation as the refrigerant pipes may be hot or cold, depending on the condition of the refrigerant flowing through the refrigerant piping, compressor, and other refrigerant cycle parts. Your hands may suffer burns or frostbite if you touch the refrigerant pipes. To avoid injury, give the pipes time to return to normal temperature or, if you must touch them, be sure to wear proper gloves.
- Install drain piping to ensure proper drainage. Improper drain piping may result in water leakage and property damage.
- Insulate piping to prevent condensation.
- Be careful when transporting the product.
- Do not turn off the power immediately after stopping operation. Always wait for at least 5 minutes before turning off the power. Otherwise, water leakage may occur.
- Do not use a charging cylinder. Using a charging cylinder may cause the refrigerant to deteriorate.
- Refrigerant R32 in the system must be kept clean, dry, and tight.
  (a) Clean and Dry -- Foreign materials (including mineral oils such as SUNISO oil or moisture) should be prevented from getting into the system.
  (b) Tight -- R32 does not contain any chlorine, does not destroy the ozone layer, and does not reduce the earth's protection again harmful ultraviolet radiation. R32 can contribute to the greenhouse effect if it is released. Therefore take proper measures to check for the tightness of the refrigerant piping installation. Read the chapter *Refrigerant Piping* and follow the procedures.
- The outdoor unit is for R32. See the catalog for indoor models that can be connected. Normal operation is not possible when connected to non-compatible indoor units.
- Remote controller (wireless kit) transmitting distance can be shorter than expected in rooms with electronic fluorescent lamps (inverter or rapid start types). Install the indoor unit far away from fluorescent lamps as much as possible.
- Indoor units are for indoor installation only. Outdoor units can be installed either outdoors or indoors.
- Do not install the air conditioner or heat pump in the following locations:
  (a) Where a mineral oil mist or oil spray or vapor is produced, for example, in a kitchen.
  Plastic parts may deteriorate and fall off or result in water leakage.
  (b) Where corrosive gas, such as sulfurous acid gas, is produced.
  Corroding copper pipes or soldered parts may result in refrigerant leakage.
  (c) Near machinery emitting electromagnetic waves.
  Electromagnetic waves may disturb the operation of the control system and cause the unit to malfunction.
  (d) Where flammable gas may leak, where there is carbon fiber, or ignitable dust suspension in the air, or where volatile flammables such as thinner or gasoline are handled. Operating the unit in such conditions can cause a fire.
- Take adequate measures to prevent the outdoor unit from being used as a shelter by small animals. Small animals making contact with electrical parts can cause malfunctions, smoke, or fire. Instruct the user to keep the area around the unit clean.
- Servicing shall be performed only as recommended by the manufacturer and licensed or certified in their jurisdiction.

⚠ NOTE

- The outdoor unit should be positioned where the unit and power supply wires (breaker panel to outdoor unit) are at least 10ft (3m) away from any televisions or radios. (The unit may cause interference with the picture or sound.) Depending on the radio waves, a distance of 10ft (3m) may not be sufficient to eliminate the noise.
- Dismantling the unit, treatment of the refrigerant, oil and additional parts must be done in accordance with the relevant local, state, and national regulations.
- Only use tools for R32 or R410A, such as a gauge manifold, charge hose, gas leak detector, reverse flow check valve, refrigerant charge base, vacuum gauge, or refrigerant recovery equipment.
- If the conventional refrigerant and refrigerator oil are mixed in R32, the refrigerant may deteriorate.
- As maximum allowable pressure is 604psi (4.17MPa), the wall thickness of field-installed pipes should be selected in accordance with the relevant local, state, and national regulations.

RN007(R32)-U

Accessories

Ⓐ Installation manual	1	Ⓑ Drain socket* 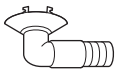 This is at the bottom of the packaging.	1
Ⓒ Drain cap (1)* 	4	Ⓓ Drain cap (2)* 	2
Ⓔ Warranty	1	Ⓕ Refrigerant charge label 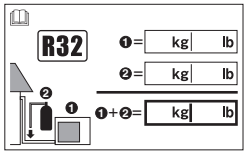 Affix near the manufacturer's label.	1
Ⓖ General Safety Considerations	1		

* Only for heat pump models

Precautions for Selecting a Location

1) Choose a place solid enough to bear the weight and vibration of the unit, where the operating sound will not be amplified.
2) Choose a location where the air discharged from the unit or the operating sound will not cause a nuisance to the neighbors of the user.
3) Avoid locations, such as near bedrooms, where the operating sound may cause disturbance.
4) There must be sufficient space to carry the unit into and out of the site.
5) There must be sufficient space for air passage and no obstructions around the air inlet and the air outlet.
6) In coastal areas or other places with a salty atmosphere or one containing sulfate gas, corrosion may shorten the life of the air conditioner.
7) Since water will flow from the drain of the outdoor unit, do not place anything under the unit which must be kept away from moisture.
8) A location where flammable gas does not leak. Position at least 6-5/8ft (2m) from propane gas cylinders.

NOTE
Cannot be installed suspended from a ceiling or stacked.

⚠ CAUTION

When operating the air conditioner in a low outdoor ambient temperature, be sure to follow the instructions described below.

- To prevent exposure to wind, install the outdoor unit with its suction side facing the wall.
- Never install the outdoor unit at a site where the suction side may be exposed directly to wind.
- To prevent exposure to wind, it is recommended to install a baffle plate on the air discharge side of the outdoor unit.
- In heavy snow areas, select an installation site where the snow will not affect the unit.
- If there is a likelihood of snow accumulating on the outdoor unit, attach a snow protection hood.
- In high humidity areas or heavy snow areas, it is recommended to attach a drain pan heater to prevent ice build-up from the bottom frame.

• Construct a large canopy.
• Construct a pedestal.

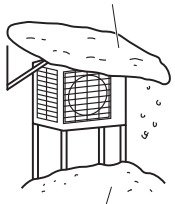

Install the unit high enough off the ground to prevent burying in snow.

Precautions on Installation

- Check the strength and level of the installation surface so that the unit does not cause any operating vibrations or noise after installation.
- Fix the unit in place securely using foundation bolts, as in the figure. (Prepare 4 sets of 5/16 inch (M8) or 3/8 inch (M10) foundation bolts, nuts and washers; all sold separately.)
- It is best to screw in the foundation bolts until their ends are 3/4 inch (20mm) from the foundation surface.

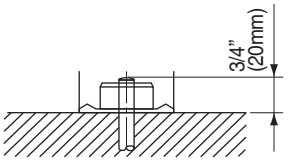

Outdoor Unit Installation Diagram

	Max. allowable piping length	65-5/8ft (20m)
**	Min. allowable piping length	10ft (3m)
	Max. allowable piping height	49-1/4ft (15m)
*	Additional refrigerant required for refrigerant pipe exceeding 49-1/4ft (15m) in length.	0.22oz/ft (20g/m)
	Gas pipe	O.D. 3/8 inch (9.5mm)
	Liquid pipe	O.D. 1/4 inch (6.4mm)

Refrigerant piping must be kept to a minimum.
*Be sure to add the proper amount of additional refrigerant. Failure to do so may result in reduced performance.
**The suggested shortest pipe length is 10ft (3m), in order to avoid noise from the outdoor unit and vibration. (Mechanical noise and vibration may occur depending on how the unit is installed and the environment in which it is used.)

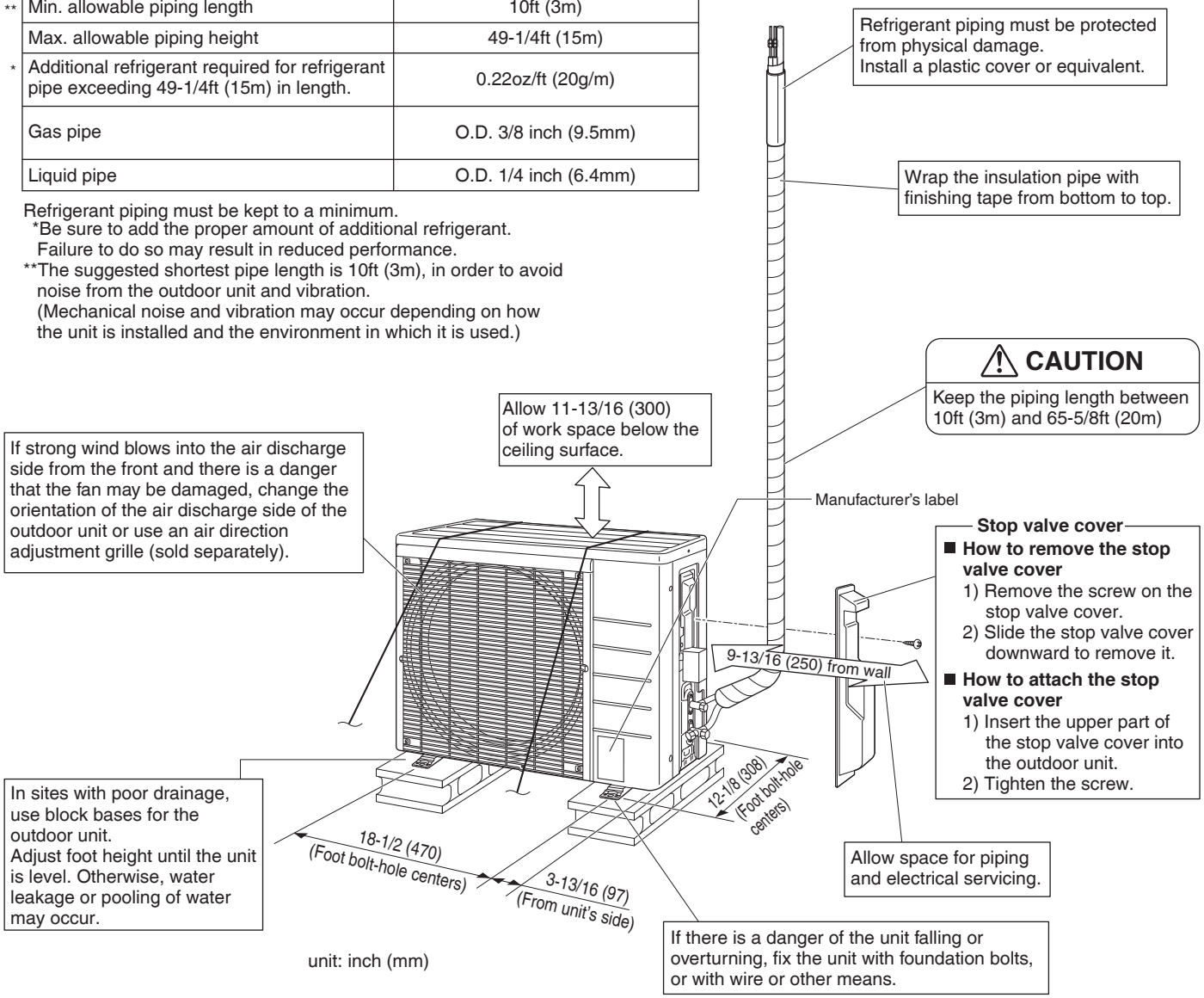

unit: inch (mm)

Refrigerant charge label

Please fill in with indelible ink,
■① the factory refrigerant charge of the product,
■② the additional refrigerant amount charged in the field and
■① + ② the total refrigerant charge
on the refrigerant charge label supplied with the product.
Affix the refrigerant charge label near the manufacturer's label after filling it out.

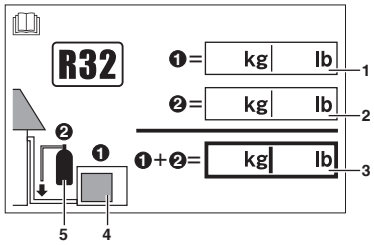

1 factory refrigerant charge of the product: see unit manufacturer's label
2 additional refrigerant amount charged in the field
3 total refrigerant charge
4 outdoor unit
5 refrigerant cylinder and manifold for charging

Installation Space Requirements

- Position the unit on a horizontal surface. Any tilt in the unit should be 3° or less to the horizontal.
- Where a wall or other obstacle is in the path of the outdoor unit's intake or exhaust airflow, follow the installation space requirements below.
- For any of the below installation patterns, the wall height on the outlet side should be 47-1/4 inch (1200mm) or less.
- Secure as much installation space around the unit as the location allows, as more space will result in more efficient operation.

Wall facing one side

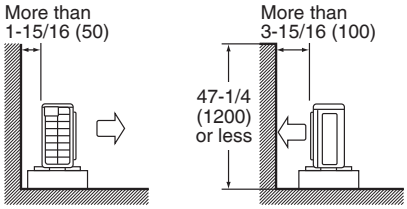

Side view

Walls facing two sides

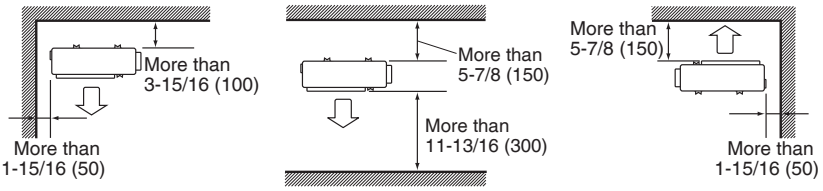

Top view

Walls facing three sides

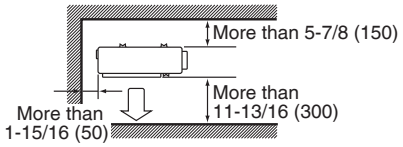

Top view

When installed as in the figure on the left, it is recommended to either change the orientation of the outdoor unit outlet side or use the air direction adjustment grille (sold separately).

unit: inch (mm)

Selecting a Location for Installation of the Indoor Units

- **Minimum required floor area (A_{min})**
  The minimum required floor area of the room where the indoor unit is installed varies depending on the installation height and refrigerant amount.

Refrigerant amount (kg) \ Indoor unit installation height (m)	h (m)					
	0.6	1.8	2.0	2.2	2.4	2.6
< 1.84	No restriction					
1.9	31.0	6.9	6.2	5.6	5.2	4.8
2.0	34.3	7.3	6.5	5.9	5.4	5.0
2.1	37.8	7.6	6.9	6.2	5.7	5.3
2.2	41.5	8.0	7.2	6.5	6.0	5.5
2.3	45.4	8.4	7.5	6.8	6.3	5.8
2.4	49.4	8.7	7.8	7.1	6.5	6.0
2.5	53.6	9.1	8.2	7.4	6.8	6.3
2.6	58.0	9.4	8.5	7.7	7.1	6.5
2.7	62.6	9.8	8.8	8.0	7.4	6.8
2.8	67.3	10.2	9.2	8.3	7.6	7.0
2.9	72.2	10.5	9.5	8.6	7.9	7.3
3.0	77.2	10.9	9.8	8.9	8.2	7.5
3.1	82.5	11.3	10.1	9.2	8.4	7.8
3.2	87.9	11.6	10.5	9.5	8.7	8.0
3.3	93.4	12.0	10.8	9.8	9.0	8.3
3.4	99.2	12.3	11.1	10.1	9.3	8.5
3.5	105.1	12.7	11.4	10.4	9.5	8.8
3.6	111.2	13.1	11.8	10.7	9.8	9.0
3.7	117.5	13.4	12.1	11.0	10.1	9.3
3.8	123.9	13.8	12.4	11.3	10.3	9.6
3.9	130.5	14.5	12.7	11.6	10.6	9.8
4.0	137.3	15.3	13.1	11.9	10.9	10.1
4.1	144.2	16.0	13.4	12.2	11.2	10.3
4.2	151.4	16.8	13.7	12.5	11.4	10.6
4.3	158.7	17.6	14.3	12.8	11.7	10.8
4.4	166.1	18.5	15.0	13.1	12.0	11.1

Refrigerant amount (lb) \ Indoor unit installation height (ft)	h (ft)					
	2.0	5.9	6.6	7.2	7.9	8.5
< 4.05	No restriction					
4.2	333	74	67	61	56	51
4.4	369	78	70	64	59	54
4.6	407	82	74	67	62	57
4.9	447	86	77	70	64	60
5.1	489	90	81	74	67	62
5.3	532	94	84	77	70	65
5.5	577	98	88	80	73	68
5.7	624	102	91	83	76	70
6.0	673	106	95	86	79	73
6.2	724	109	98	90	82	76
6.4	777	113	102	93	85	78
6.6	831	117	106	96	88	81
6.8	888	121	109	99	91	84
7.1	946	125	113	102	94	87
7.3	1006	129	116	106	97	89
7.5	1068	133	120	109	100	92
7.7	1131	137	123	112	103	95
7.9	1197	141	127	115	106	97
8.2	1264	145	130	118	108	100
8.4	1334	149	134	122	111	103
8.6	1405	156	137	125	114	106
8.8	1478	164	141	128	117	108
9.0	1553	173	144	131	120	111
9.3	1629	181	148	134	123	114
9.5	1708	190	154	138	126	116
9.7	1788	199	161	141	129	119

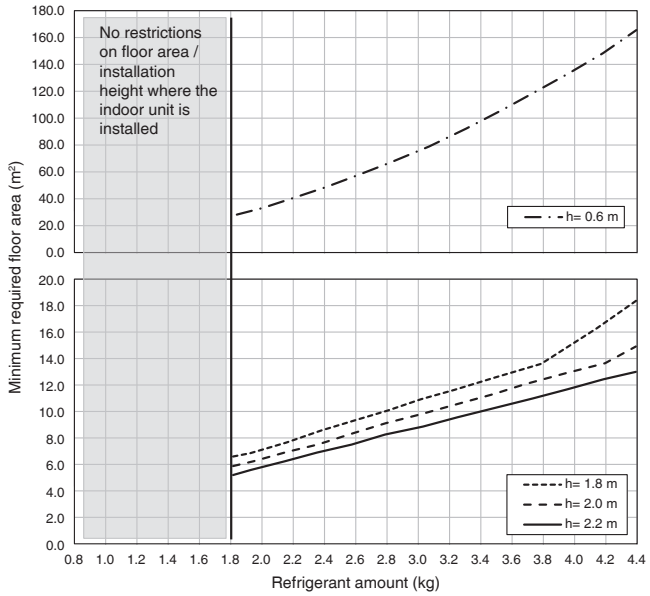

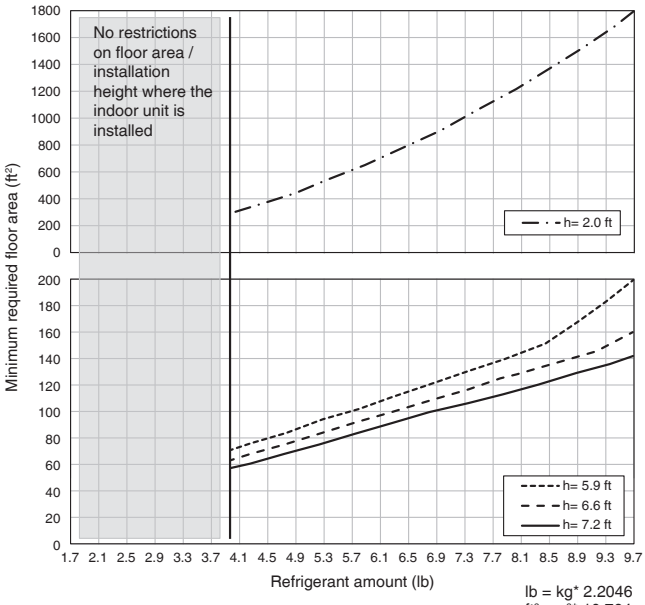

lb = kg* 2.2046
ft²= m²* 10.764

Outdoor Unit Installation

1. Installing the outdoor unit

- When installing the outdoor unit, refer to **"Precautions for Selecting a Location"** on page 3 and **"Outdoor Unit Installation Diagram"** on page 4.
- If drain work is necessary, follow the procedures below.

2. Drain work (Only for heat pump models)

⚠CAUTION

In cold areas, do not use a drain socket, drain caps (1, 2) and a drain hose with the outdoor unit. (Drain water may freeze, impairing heating performance.)

- If the drain port is covered by a mounting base or floor surface, place additional foot bases of at least 1-1/4 inch (30mm) in height under the outdoor unit's feet.

1) Attach Ⓒ drain cap (1) and Ⓓ drain cap (2).
2) Attach Ⓑ drain socket to the shape of drain hole and fix it by turning.
   - When attaching Ⓑ drain socket to the bottom frame, make sure to connect the drain hose to the drain socket first.

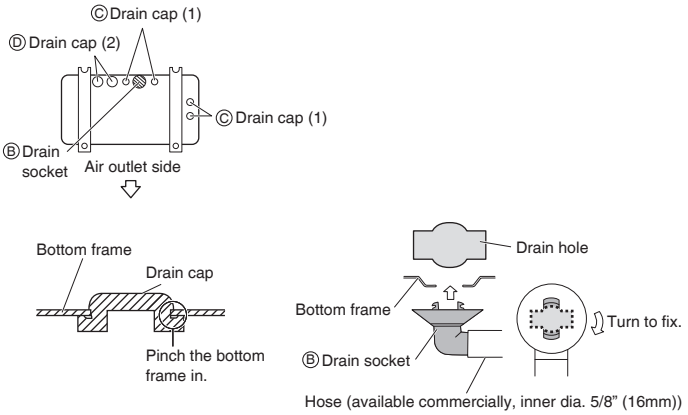

3. Flaring the pipe end

⚠WARNING

- Do not apply mineral oil to the flare.
- Prevent mineral oil from getting into the system as this would reduce the service life of the units.
- Never use piping which has been used for previous installations. Only use parts which are delivered with this unit.
- Never install a dryer to this R32 unit in order to guarantee its service life.
- The drying material may dissolve and damage the system.
- Improper flaring may result in refrigerant gas leakage.

⚠CAUTION

Do not reuse joints which have been used once already.

1) Cut the pipe end with a pipe cutter.
2) Remove burrs with the cut surface facing downward, so that the filings do not enter the pipe.
3) Put the flare nut on the pipe.
4) Flare the pipe.
5) Check that the flaring has been done correctly.

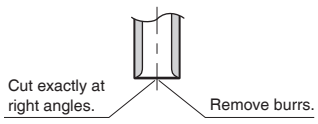

Check

The flare's inner surface must be flaw-free.

The pipe end must be evenly flared in a perfect circle.

When flaring, do not over-tighten and crack.

Make sure that the flare nut is fitted.

Flaring

Set exactly at the position shown below.

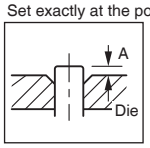

	Flare tool for R32 or R410A	Conventional flare tool	
	Clutch-type	Clutch-type (Rigid-type)	Wing-nut type (Imperial-type)
A	0-0.020 inch (0-0.5mm)	0.039-0.059 inch (1.0-1.5mm)	0.059-0.079 inch (1.5-2.0mm)

4. Refrigerant piping

⚠ CAUTION

- Use the flare nut fixed to the main unit. (This is to prevent the flare nut from cracking as a result of deterioration over time.)
- Use a torque wrench when tightening the flare nuts to prevent damage to the flare nuts and gas leakage.
- Excessive tightening of the flare nut can result in the flare nut cracking in the long term, leading to gas leakage.

- Align the centers of both flares and tighten the flare nuts 3 or 4 turns by hand, then tighten them fully with a spanner and a torque wrench.

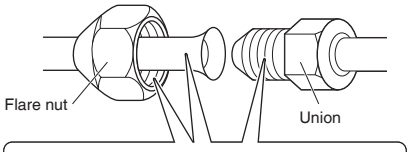

Do not apply refrigeration oil, gas leak prevention agent, etc., to the outer surface of the flare or threads (flare nut, union).
(May result in cracking of the flare nut or damage to the threads)

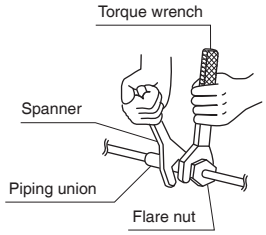

Tightening torque

Piping connection

Flare nut	
Gas side	Liquid side
3/8 inch (9.5mm)	1/4 inch (6.4mm)
24-1/8 – 29-3/8lbf • ft (32.7-39.9N • m)	10-1/2 – 12-5/8lbf • ft (14.2-17.2N • m)

Valve cap

Width across flats	
11/16 inch (17mm)	3/4 inch (19mm)
10-1/2 – 12-5/8lbf • ft (14.2-17.2N • m)	12-5/8 – 15-3/8lbf • ft (17.1-20.9N • m)

Service port cap

7-7/8 – 10-7/8lbf • ft (10.7-14.7N • m)

Cautions on pipe handling

- Protect the open end of the pipe from dust and moisture.
- All pipe bends should be as gentle as possible. Use a pipe bender for bending.

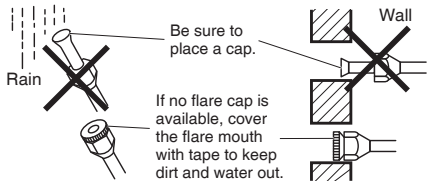

Selection of copper and heat insulation materials

When using commercial copper pipes and fittings, observe the following:

- Insulation material: Polyethylene foam
  Heat transfer rate: 0.041 to 0.052W/mK (0.024 to 0.030Btu/fth°F) (0.035 to 0.045kcal/mh°C)
  Be sure to use insulation that is designed for use with HVAC Systems.
- ACR Copper only.
- Be sure to insulate both the gas and liquid piping and observe the insulation dimensions as below.

	Piping size	Minimum bend radius	Piping thickness	Thermal insulation size	Thermal insulation thickness
Gas side	O.D. 3/8 inch (9.5mm)	1-3/16 inch (30mm) or more	0.031 inch (0.8mm) (C1220T-O)	I.D. 15/32-19/32 inch (12-15mm)	13/32 inch (10mm) Min.
Liquid side	O.D. 1/4 inch (6.4mm)	1-3/16 inch (30mm) or more	0.031 inch (0.8mm) (C1220T-O)	I.D. 5/16-13/32 inch (8-10mm)	

- Use separate thermal insulation pipes for gas and liquid refrigerant pipes.
- Using finishing tape, bundle and wrap the indoor unit piping and drain hose together so that the drain hose is below the other piping.

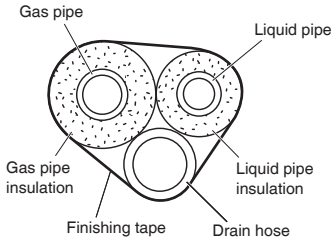

Outdoor Unit Installation

5. Pressure test and evacuating system

⚠ WARNING

- Make sure that air or any matter other than refrigerant (R32) does not get into the refrigeration cycle.
- If refrigerant gas leaks should occur, ventilate the room as soon and as much as possible.
- R32, as well as other refrigerants, should always be recovered and never be released directly into the environment.
- **Use tools for R32 or R410A (such as the gauge manifold, charging hose, or vacuum pump adapter).**

⚠ CAUTION

It is highly recommended that you do not open/close the stop valves when the outdoor temperature is below –5°F (–21°C) as this may result in refrigerant leakage.

- When piping work is complete, it is necessary to perform a pressure test and evacuate system with a vacuum pump.
- If using additional refrigerant, purge the air from the refrigerant pipes and indoor unit using a vacuum pump, then charge additional refrigerant.
- Use a hexagonal wrench (3/16 inch (4mm)) to operate the stop valve rod.
- All refrigerant pipe joints should be tightened with a torque wrench to the specified tightening torque.

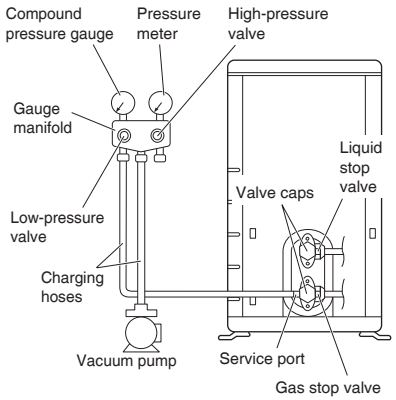

1) Pressurize the liquid pipe and gas pipe from the service port of gas stop valve to 604psi (4.17MPa) (do not pressurize more than 604psi (4.17MPa)) for 1 hour minimum, 24 hours recommended. If there is a pressure drop, check for leaks, make repairs and perform the pressure test again.
2) Connect the gauge manifold's charging hose to the gas stop valve's service port.
3) Fully open the low-pressure valve (Lo) on the gauge manifold and fully close the high-pressure valve (Hi). (High-pressure valve will require no further operation.)
4) Evacuate system using vacuum pump to below 500 microns for 1 hour minimum.
5) Close the low-pressure valve (Lo) on the gauge manifold and stop vacuum pumping. (Maintain this condition for a few minutes to make sure that the compound pressure gauge pointer does not swing back.)*1
6) Remove the valve caps from the liquid stop valve and gas stop valve.
7) To open the liquid stop valve, turn the rod of the valve 90° counter-clockwise using a hexagonal wrench. Close it after 5 seconds, and check for gas leakage. Using soapy water, check for gas leakage from the indoor unit's flare and outdoor unit's flare and valve rods. After the check is complete, wipe all soapy water off *2.
8) Disconnect the charging hoses from the service port for the gas stop valve, then fully open the liquid and gas stop valves. (Do not attempt to turn the valve rods further than they can go.)
9) Tighten the valve caps and service port caps for the liquid and gas stop valves with a torque wrench to the specified torques. Refer to **"4. Refrigerant piping"** on page 8 for details.

*1 If the compound pressure gauge pointer swings back, the refrigerant may have water content or there may be a loose pipe joint. Check all pipe joints and retighten nuts as needed, then repeat steps 3) through 5).

*2 **Under no circumstances shall potential sources of ignition be used in the searching for or detection of refrigerant leaks. A halide torch (or any other detector using a naked flame) shall not be used. Do not use substances containing chlorine and electronic leak detection for gas leak detection.**

Wiring

⚠ WARNING

- **RISK OF ELECTRIC SHOCK CAUSE INJURY OR DEATH.**
  System contains oversize protective earthing (grounding) terminal which shall be properly connected.
- Do not ground units to water pipes, gas pipes, telephone wires, or lightning rods as incomplete grounding can cause a severe shock hazard resulting in severe injury or death.
  Additionally, grounding to gas pipes could cause a gas leak and potential explosion causing severe injury or death.
- Do not use tapped wires, extension cords, or starburst connections, as they may cause overheating, electric shock, or fire.
- Do not use locally purchased electrical parts inside the product. (Do not branch the power for the drain pump, etc., from the terminal block.) Doing so may cause electric shock or fire.
- The circuit must be protected with safety devices in accordance with local and national codes, i.e. a circuit breaker.
- Use an all-pole disconnection type circuit breaker with at least 1/8 inch (3mm) between the contact point gaps.
- When carrying out wiring, take care not to pull at the conduit.
- Do not connect the power wire to the indoor unit. Doing so may cause electric shock or fire.
- Do not turn on the circuit breaker until all work is completed.

⚠ CAUTION

Precautions to be taken for power supply wiring

Recommend stranded cable for interunit wiring. Local code always supersedes recommendation.

- For stranded wires, make sure to use the round crimp-style terminal for connection to the power supply terminal block. Place the round crimp-style terminals on the wires up to the covered part and secure in place.

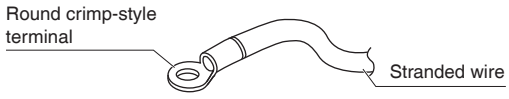

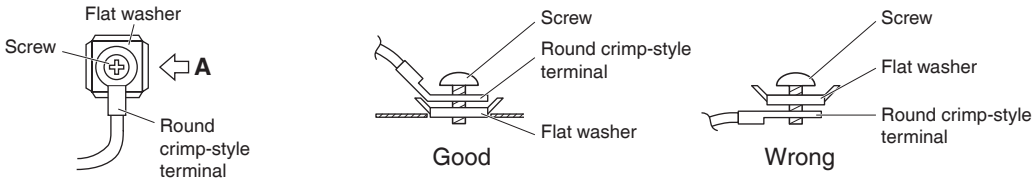

Arrow view **A**

- If solid core wire must be used, be sure to curl the end of the lead. Improper work may cause heat and fire.

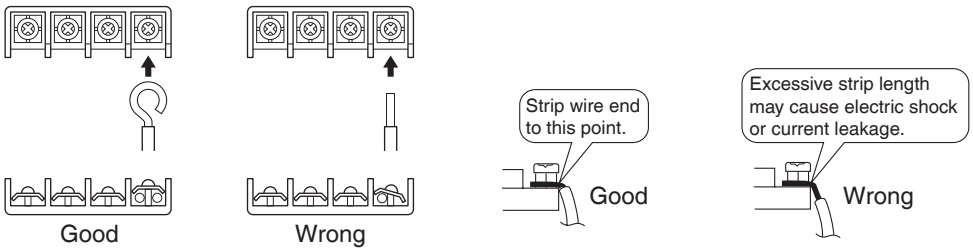

Stripping wire at terminal block

Wiring

[Method of mounting conduit]

- When wiring, remove the top plate and look at the wiring diagram on the back of the top plate.
- A protection plate is fixed for protection from the high-voltage section.

1) Dismount the stop valve cover by removing the screw.
2) Dismount the protection plate by removing the 2 screws.
3) Dismount the conduit mounting cover by removing the 2 screws.
4) Pass wires through the conduit and secure them with a lock nut.

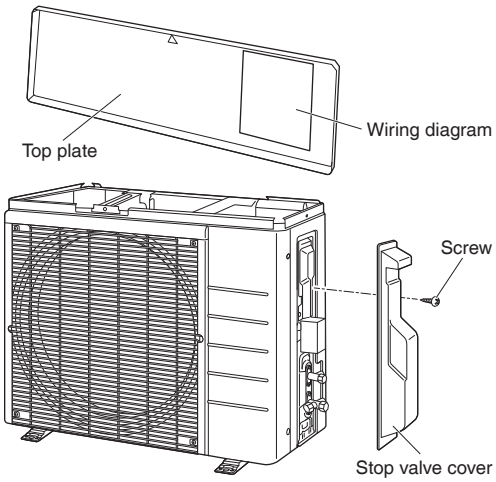

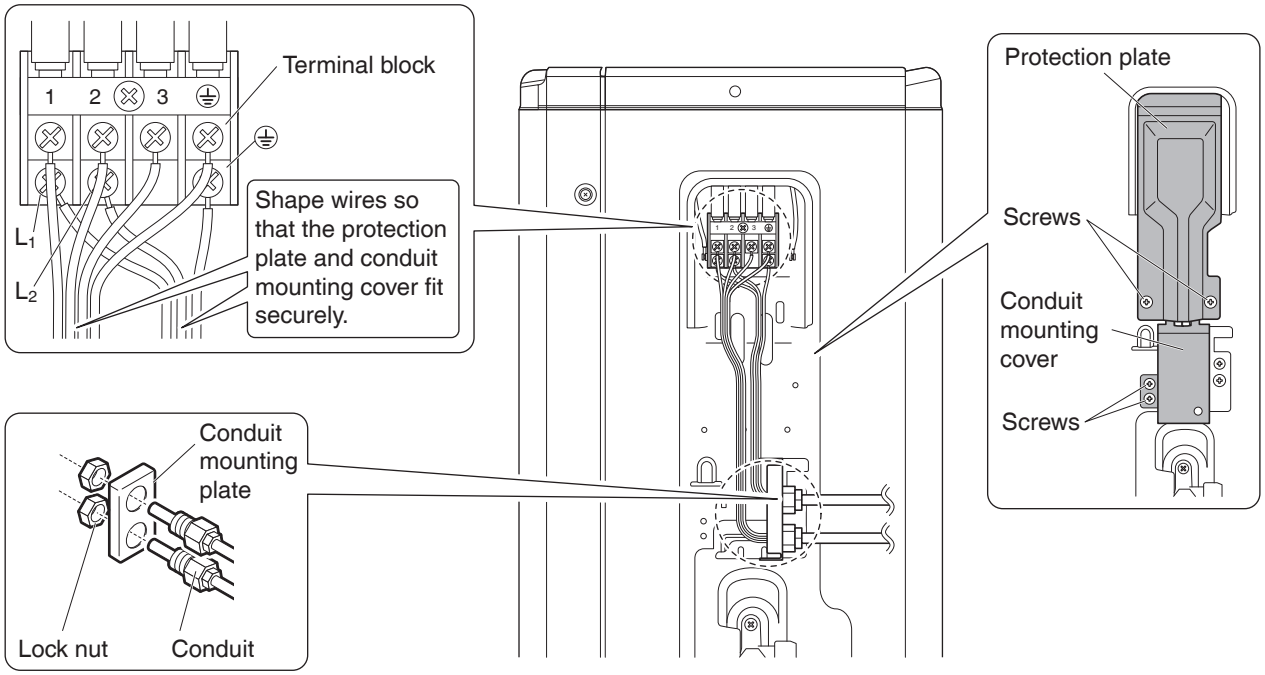

[Wiring procedure]

1) Strip the insulation from the wire (3/4 inch (20mm)).
2) Connect the inter-unit wires between the indoor and outdoor units so that the terminal numbers match. Tighten the terminal screws securely. It is recommended that a slot-head screwdriver be used to tighten the screws.
3) Pull the wire lightly to make sure that it does not disconnect.
4) After completing the work, reattach the conduit mounting cover, the protection plate, and the stop valve cover to its original position.

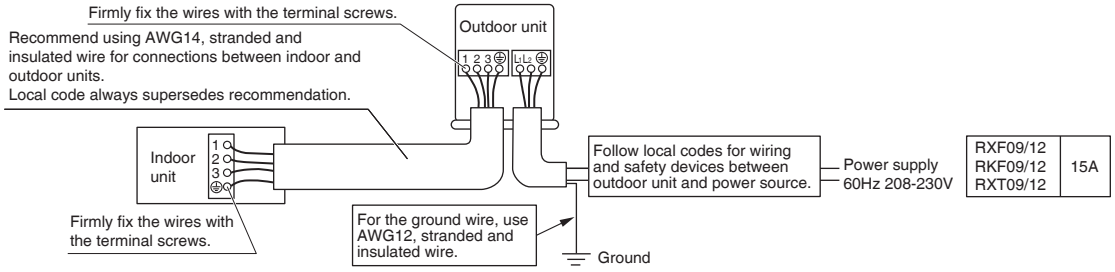

Ground

This air conditioner must be grounded. For grounding, follow all local, and state electrical codes.

NOTE

Take care to ensure that all wiring between indoor unit and outdoor unit has a consistent connection. Any splices can cause communication errors.

Facility Setting (cooling at low outdoor temperature)

⚠ WARNING

Make sure to turn the power OFF before performing work.

⚠ CAUTION

- If the outdoor unit is installed where the heat exchanger of the unit is exposed to direct wind, provide a windbreak wall.
- Intermittent noises may be produced by the indoor unit due to the outdoor fan turning on and off when using facility settings.
- Do not place humidifiers or other items which might raise the humidity in rooms where facility settings are being used. A humidifier might cause dew condensation from the indoor unit outlet vent.
- Activating the facility setting sets the indoor fan tap to the highest position. Notify the user about this.

This function is designed for facilities such as equipment or computer rooms. It is never to be used in a residence or office where people occupy the space.

■ Cutting the Jumper 6 (J6) for RXT09, RXF09, RKF09, Jumper 7 (J7) for RXT12, RXF12, RKF12 on the circuit board will expand the operation range down to 14°F (–10°C).

Installing an air direction adjustment grille (sold separately) will further extend the operation range to –4°F (–20°C). In these cases, the unit will stop operating if the outdoor temperature falls below –4°F (–20°C), restarting once the temperature rises above this level.

1) Remove the top plate of the outdoor unit. (4 screws)
2) Remove the front plate. (5 screws)
3) Cut the Jumper 6 (J6) for RXT09, RXF09, RKF09, Jumper 7 (J7) for RXT12, RXF12, RKF12 of the PCB inside.

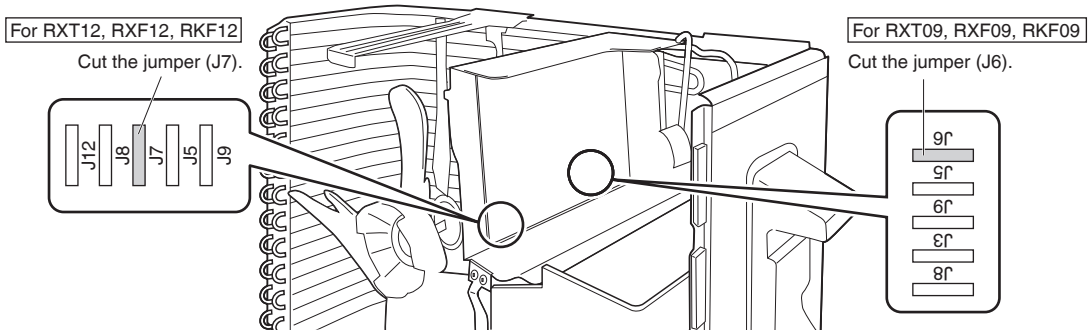

When attaching the drain pan heater (Only for heat pump models)

⚠ WARNING

Make sure to turn the power OFF before performing work.

In high humidity areas or heavy snow areas, it is recommended to attach a drain pan heater to prevent ice build-up from the bottom frame.

1) Attach the drain pan heater in accordance with the installation manual included with the drain pan heater.
2) Cut the jumper (J9) of the PCB inside.

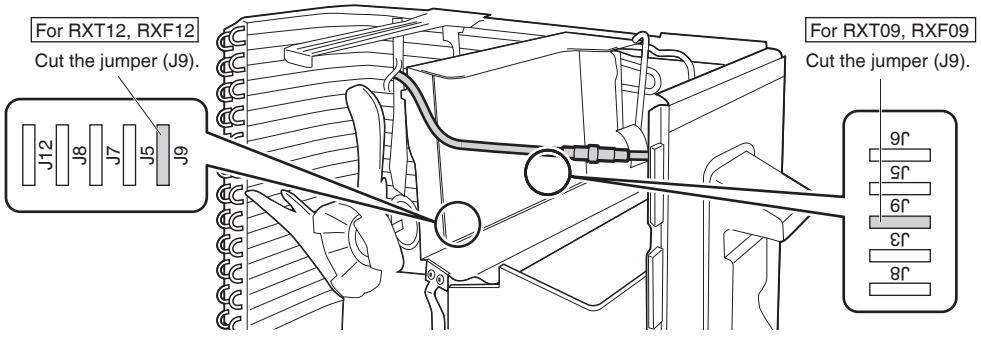

Pump Down Operation

In order to protect the environment, be sure to pump down when relocating or disposing of the unit.

1) Remove the valve caps from the liquid stop valve and gas stop valve.
2) Begin forced cooling operation.
3) After 5 to 10 minutes, close the liquid stop valve with a hexagonal wrench.
4) After 2 to 3 minutes, close the gas stop valve and stop forced cooling operation.
5) Attach the valve caps once procedures are complete.

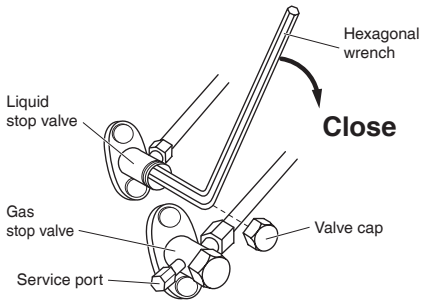

Forced cooling operation

Refer to the installation manual for the indoor unit.

Trial Operation and Testing

- When trial operation is conducted directly after the circuit breaker is turned on, in some cases no air will be output for about 15 minutes in order to protect the air conditioner.

1. Trial operation and testing

Refer to the installation manual for the indoor unit.

2. Test items

Test items	Symptom	Check
Indoor and outdoor units are installed securely.	Fall, vibration, noise	
No refrigerant gas leaks.	Incomplete cooling/heating function	
Refrigerant gas and liquid pipes and indoor drain hose extension are thermally insulated.	Water leakage	
Draining line is properly installed.	Water leakage	
System is properly grounded.	Electrical leakage	
Only specified wires are used for all wiring, and all wires are connected correctly.	No operation or burn damage	
Indoor or outdoor unit's air inlet or air outlet are unobstructed.	Incomplete cooling/heating function	
Stop valves are opened.	Incomplete cooling/heating function	
Indoor unit properly receives remote control commands.	No operation	

MEMO

© 2023 **DAIKIN COMFORT TECHNOLOGIES MANUFACTURING, L.P.**
19001 Kermier Road
Waller, TX 77484
https://www.northamerica-daikin.com

Two-dimensional bar code
is a manufacturing code.

3P740832-2C M24B015 (2408) HT