Operator's Manual

Vertex® X-Series Mower

Model—Serial Range

VXX999EKA52600—422200000 and Up
VXX999EKA60600—422200000 and Up
VXX999EKA72600—422200000 and Up

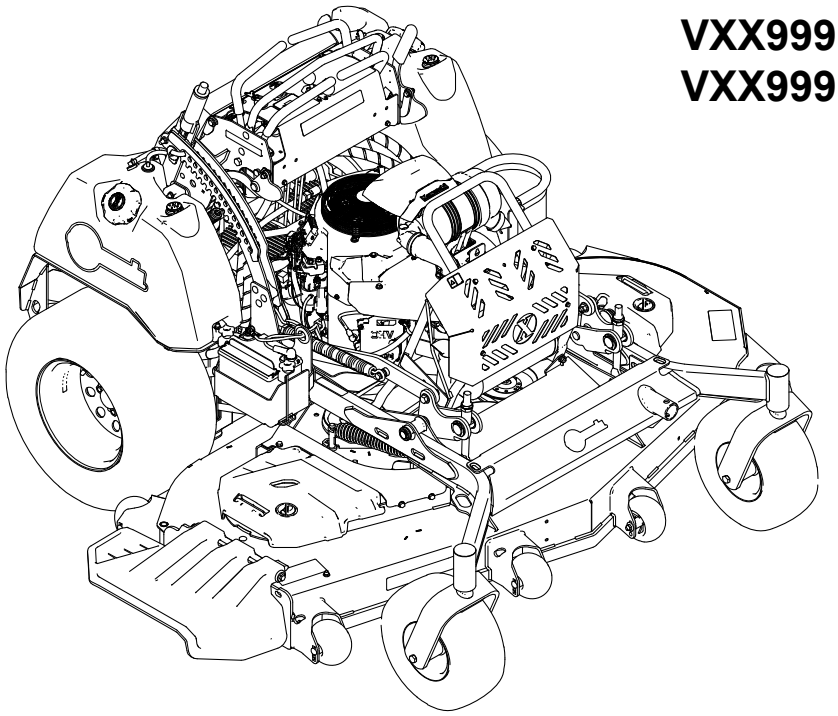

3484-849A

Original Instructions (EN)

3484-849

Disclaimers and Regulatory Information

It is a violation of California Public Resource Code Section 4442 or 4443 to use or operate the engine on any forest-covered, brush-covered, or grass-covered land unless the engine is equipped with a spark arrester, as defined in Section 4442, maintained in effective working order or the engine is constructed, equipped, and maintained for the prevention of fire.

Gross or Net Torque: The gross or net torque of this engine was laboratory rated by the engine manufacturer in accordance with the Society of Automotive Engineers (SAE) J1940 or J2723. As configured to meet safety, emission, and operating requirements, the actual engine torque on this class of mower will be significantly lower. Please refer to the engine manufacturer's information included with the machine.

⚠ WARNING

CALIFORNIA
Proposition 65

The engine exhaust from this product contains chemicals known to the State of California to cause cancer, birth defects, or other reproductive harm.

Battery posts, terminals, and related accessories contain lead and lead compounds, chemicals known to the State of California to cause cancer and reproductive harm. Wash hands after handling.

Use of this product may cause exposure to chemicals known to the State of California to cause cancer, birth defects, or other reproductive harm.

Table of Contents

Chapter 1: Introduction 1–1
- Intended Use 1–1
- Getting Help 1–1
- Manual Conventions 1–2
  - Safety Alert Classifications 1–2

Chapter 2: Safety 2–1
- General Safety 2–1
- Safety and Instructional Decals 2–1

Chapter 3: Product Overview 3–1
- Control Panel 3–1
- Motion-Control Levers 3–3
- Parking-Brake Lever 3–4
- **Deck-Lift Handle** 3–4
- Fuel-Shutoff Valve 3–5
- Electronic-Control Unit Malfunction-Indicator Light 3–5
- Specifications 3–5
- Attachments/Accessories 3–8

Chapter 4: Operation 4–1
- Before Operation Safety 4–1

© 2026—Exmark Mfg. Co., Inc.

415 Industrial Row
Beatrice, NE 68310

Contact us at www.Exmark.com

All rights reserved

Fuel Safety 4–2
Fuel 4–3
Fuel Specifications 4–3
Filling the Fuel Tanks 4–3
Performing Daily Maintenance 4–4
Break-In Time 4–4
Safety-Interlock System Checks 4–4
Verifying that the Engine Starts Normally 4–4
Checking the Engine Starting Circuit 4–6
Checking the Shutdown Circuit 4–8
During Operation 4–8
During Operation Safety 4–8
Starting the Engine 4–10
Stopping the Engine 4–11
Operating the Mower Blade-Control Switch (PTO) 4–11
Driving the Machine 4–12
Driving Forward 4–13
Driving Backward 4–14
Adjusting the Height of Cut 4–14
After Operation 4–15
After Operation Safety 4–15
Adjusting the Anti-Scalp Rollers 4–15
Cleaning the Machine 4–17
Hauling the Machine 4–17
Moving a Non-Functioning Machine 4–19
Chapter 5: Maintenance 5–1
Maintenance Safety 5–1
Recommended Maintenance Schedule 5–2
Pre-Maintenance Procedures 5–3
Removing the Cushion for Rear Access 5–3
Removing the Rear Guard 5–3
Installing the Rear Guard 5–4
Lubrication 5–4
Lubricating the Grease Fittings 5–4
Greasing the Caster-Wheel Hubs 5–5
Engine Maintenance 5–7
Engine Safety 5–7
Air Cleaner Service 5–7
Engine-Oil Service 5–8
Servicing the Spark Plug 5–12
Checking the Spark Arrester 5–14
Fuel Maintenance 5–14
Replacing the Fuel Filter 5–14
Electrical System Maintenance 5–15
Electrical System Safety 5–15
Battery Service 5–15
Jump-Starting the Machine 5–18
Drive System Maintenance 5–20
Tire Pressure 5–20
Adjusting the Caster-Pivot Bearing 5–20
Checking the Wheel-Lug Nuts 5–21
Hydraulic System Maintenance 5–22
Hydraulic System Safety 5–22

Hydraulic-Fluid Specifications 5–22
Checking the Hydraulic Fluid 5–22
Replacing the Hydraulic Fluid and Filters 5–23
Bleeding the Hydraulic System 5–25
Controls Maintenance 5–26
Adjusting Motion-Control Tracking 5–26
Adjusting the Motion-Control Lever Resistance 5–27
Adjusting the Motion-Control Levers to Neutral Lock 5–29
Belt Maintenance 5–30
Checking the Belts 5–30
Mower-Deck Maintenance 5–30
Blade Service 5–30
Leveling the Mower Deck 5–33
Replacing the Grass Deflector 5–36
Chassis Maintenance 5–36
Checking for Loose Hardware 5–36
Cleaning 5–37
Cleaning Debris from the Machine 5–37
Cleaning the Engine and Exhaust System Area 5–37
Cleaning the Cooling Fins 5–37
Cleaning Grass Build-Up the Under Deck 5–38
Disposing of Waste 5–38
Chapter 6: Storage 6–1
Storage Safety 6–1
Preparing the Machine for Storage Over 30 Days 6–1
Storing the Battery 6–2
Battery Storage Tips 6–3
Chapter 7: Troubleshooting 7–1
Chapter 8: Schematics 8–1
Electrical Diagram 8–1
Hydraulic Diagram 8–2
California Proposition 65 Warning Information

Chapter 1

Introduction

Intended Use

This rotary-blade, stand-on lawn mower is intended to be used by professional, hired operators. It is designed primarily for cutting grass on well-maintained lawns on residential or commercial properties. Using this product for purposes other than its intended use could prove dangerous to you and bystanders.

Read this information carefully to learn how to operate and maintain the product properly and to avoid injury and product damage. The operator is responsible for operating the product properly and safely.

Getting Help

Visit www.Exmark.com for product safety and operation training materials, accessory information, or help finding a dealer.

Whenever you need service, genuine Exmark parts, or additional information, contact an Authorized Service Dealer or Exmark Customer Service and have the model and serial numbers of your product ready. These numbers are located on the serial plate on your product (1). Write the numbers in the space provided.

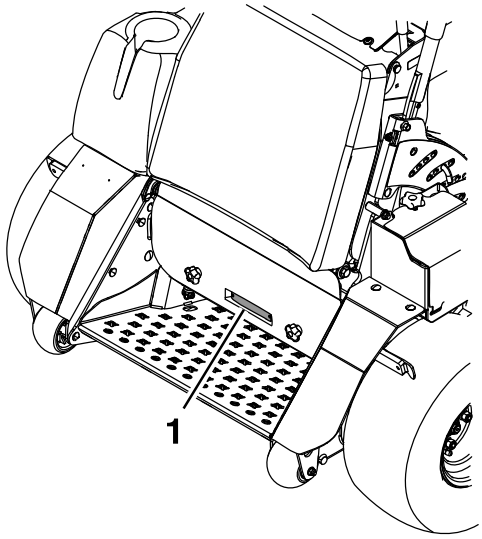

G557404

IMPORTANT

With your mobile device, you can scan the QR code on the serial number decal (if equipped) to access warranty, parts, and other product information.

Model Number:		**Serial Number:**	

Manual Conventions

This manual identifies potential hazards and has safety messages identified by the safety-alert symbol, which signals a hazard that may cause serious injury or death if you do not follow the recommended precautions.



G405934

This manual uses 2 words to highlight information. **Important** calls attention to special mechanical information and **Note** emphasizes general information worthy of special attention.

Safety Alert Classifications

The safety-alert symbol shown in this manual and on the machine identifies important safety messages that you must follow to prevent accidents.

Safety-alert symbol appears above information that alerts you to unsafe actions or situations and is followed by the word **DANGER**, **WARNING**, or **CAUTION**.

DANGER

Danger indicates an imminently hazardous situation which, if not avoided, *will* result in death or serious injury.

WARNING

Warning indicates a potentially hazardous situation which, if not avoided, *could* result in death or serious injury.

CAUTION

Caution indicates a potentially hazardous situation which, if not avoided, *may* result in minor or moderate injury.

General Safety

This product is capable of amputating hands and feet and of throwing objects. Always follow all safety instructions to avoid serious personal injury or death.

- Read, understand, and follow the instructions and warnings in this *Operator's Manual* and on the machine, engine, and attachments before starting the engine.
- Do not allow children or untrained people to operate or service the machine. Allow only people who are responsible, trained, familiar with the instructions, and physically capable to operate or service the machine.
- Keep bystanders, particularly children, away from the operating area.
- Do not operate the machine near drop-offs, ditches, embankments, water, or other hazards.
- Do not put your hands or feet near moving parts.
- Do not operate the machine without all safety shields, guards, switches, and other devices in place and working properly.
- Park the machine on a level surface, disengage the drives, engage the parking brake, shut off the engine, and wait for all moving parts to stop before leaving the operator's position.
- Wait for the machine to cool before servicing, adjusting, fueling, cleaning, or storing it.

Safety and Instructional Decals

Safety decals and instructions are easily visible to the operator and are located near any area of potential danger. Replace any decal that is damaged or missing.

Decal Part: 106-5517

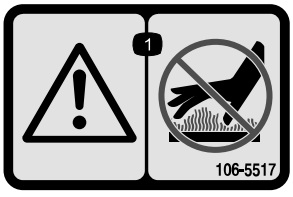

s_decal106-5517

(1) Warning—do not touch the hot surface.

Decal Part: 109-6036

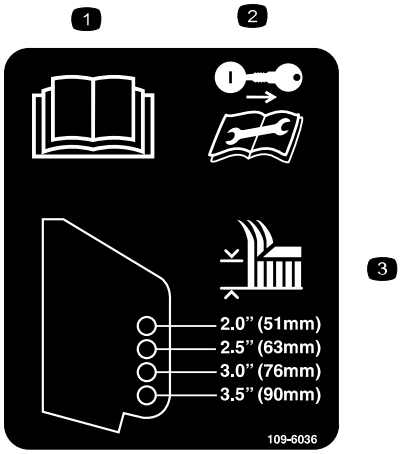

s_decal109-6036

1. Read the *Operator’s Manual*.
2. Remove the key and read the instructions before servicing or performing maintenance.
3. Height of cut

Decal Part: 112-9028

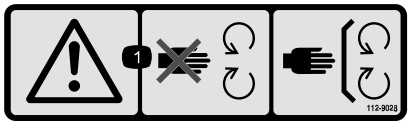

s_decal112-9028

1. Warning—stay away from moving parts; keep all guards and shields in place.

Decal Part: 116-5988

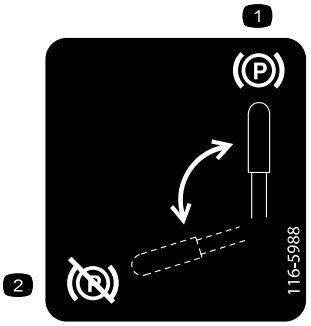

s_decal116-5988

1. Parking brake—engaged
2. Parking brake—disengaged

Decal Part: 116-7912

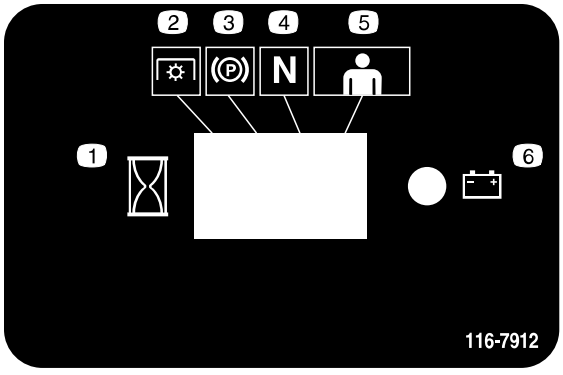

s_decal116-7912

1. Interval
2. Power Take-off (PTO)
3. Parking brake
4. Neutral
5. Operator presence control
6. Battery

Decal Part: 116-8253

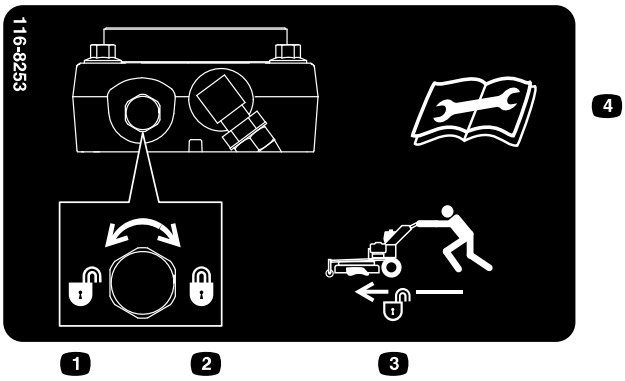

s_decal116-8253

1 Rotate counterclockwise to release.

2 Rotate clockwise to lock.

3 Unlock to push machine.

4 Read the instructions before servicing or performing maintenance.

Decal Part: 116-8283

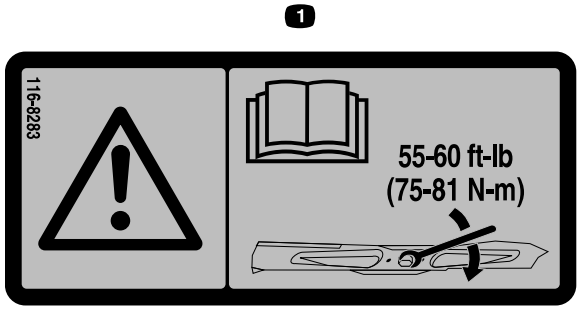

s_decal116-8283

1 Warning—read the *Operator's Manual* for instructions on torquing the blade bolt/nut to 75 to 81 N·m (55 to 60 ft-lb).

Decal Part: 146-1018

60in and 72in Decks Only

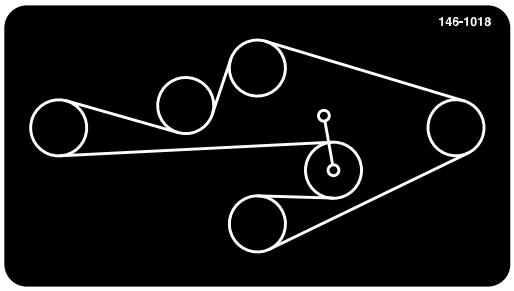

decal146-1018

Decal Part: 116-8774

52in Decks Only

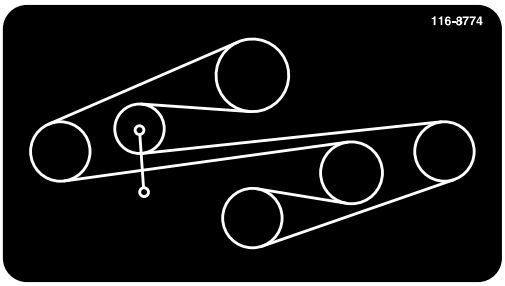

decal116-8774

Decal Part: 161-6620

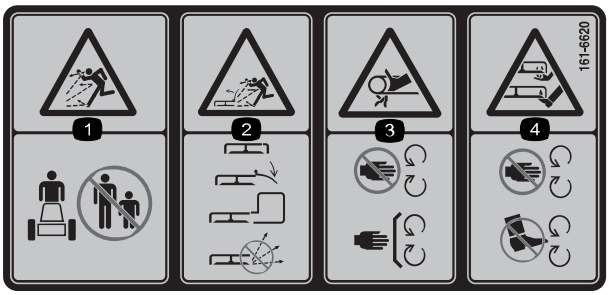

s_decal161-6620

1. Thrown object hazard—keep bystanders away from the machine.
2. Thrown object hazard, raised deflector—lower the deflector before operating the machine; always operate the machine with the deflector, discharge cover, or grass collection system in place; do not operate the machine with the discharge opening uncovered.
3. Entanglement hazard—keep away from moving parts; keep all guards and shields in place.
4. Severing hazard of hand or foot—keep hands and feet away from moving parts.

Decal Part: 133-8062



s_decal133-8062

Decal Part: 142-3077

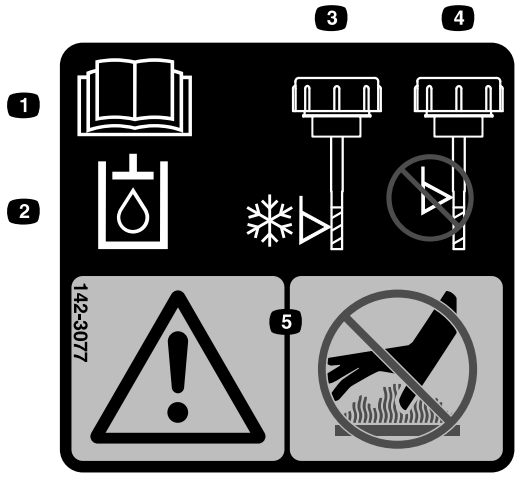

s_decal142-3077

1. Read the *Operator's Manual*.
2. Hydraulic fluid
3. Correct fill level when cold
4. Do Not overfill
5. Warning-Do Not touch the hot surface.

Decal Part: 146-1017

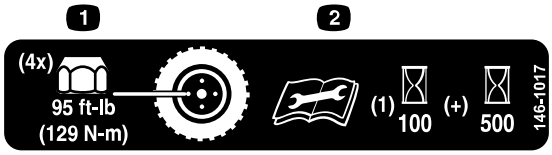

s_decal146-1017

1. Wheel lug nut—torque to 95 ft-lb (129 N-m) (4x).
2. Read and understand the *Operator's Manual* before performing maintenance; check torque after first 100 hours and every 500 hours thereafter.

Decal Part: 146-3284

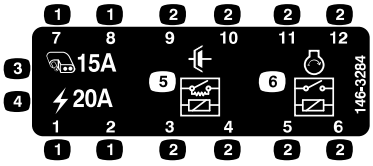

decal146-3284

1. Fuse location
2. Relay location
3. Auxiliary, 15A
4. Main, 20A
5. Clutch saver relay
6. Start relay

Decal Part: 146-2161

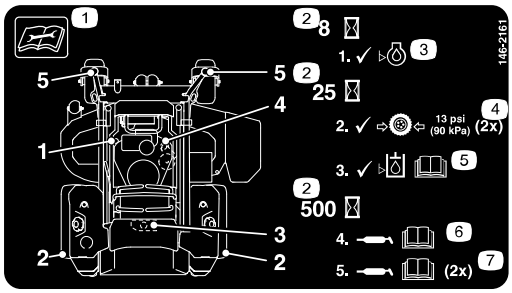

decal146-2161

1. Read the instructions before servicing or performing maintenance.
2. Time interval
3. Check the engine oil level
4. Check tire pressure (2 locations)
5. Check hydraulic oil level; refer to the *Operator's Manual* or further instructions.
6. Grease the idler pivot; refer to the *Operator's Manual* for further instructions.
7. Grease the caster pivots; refer to the *Operator's Manual* for further instructions (2 locations).

Decal Part: 146-1969

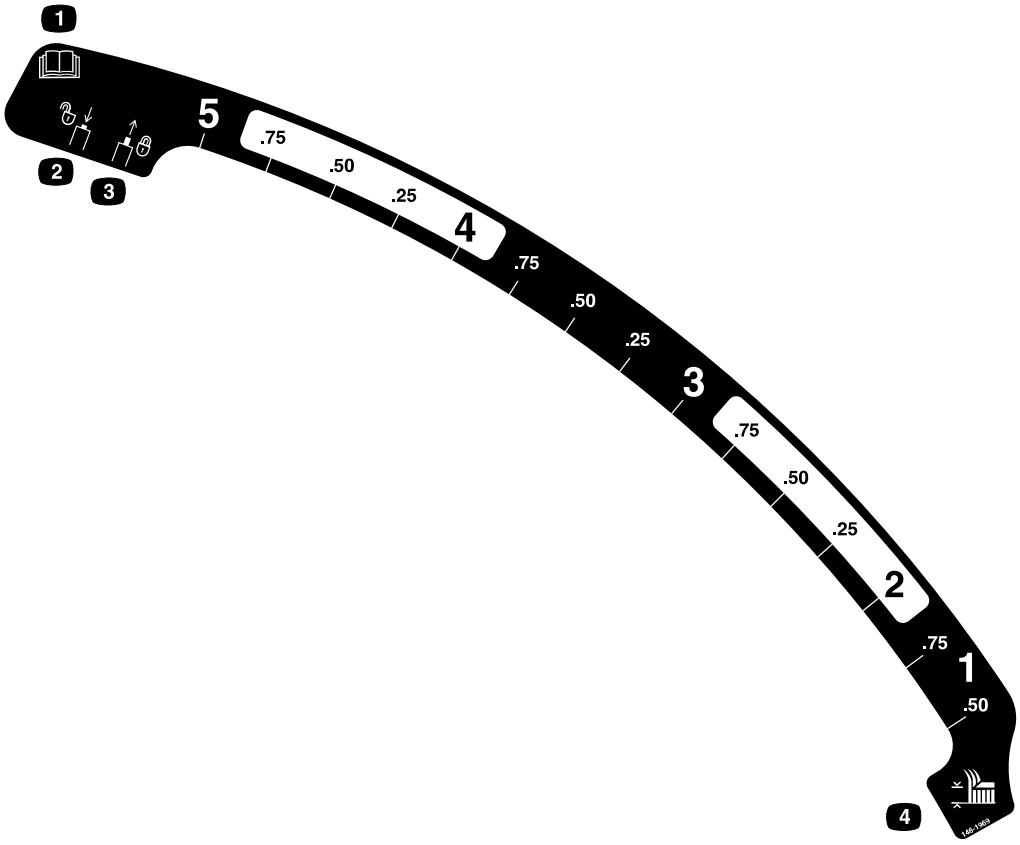

decal146-1969

1. Read the *Operator's Manual*.
2. Push button down to unlock
3. Release button to lock
4. Height of cut

Decal Part: 146-2052

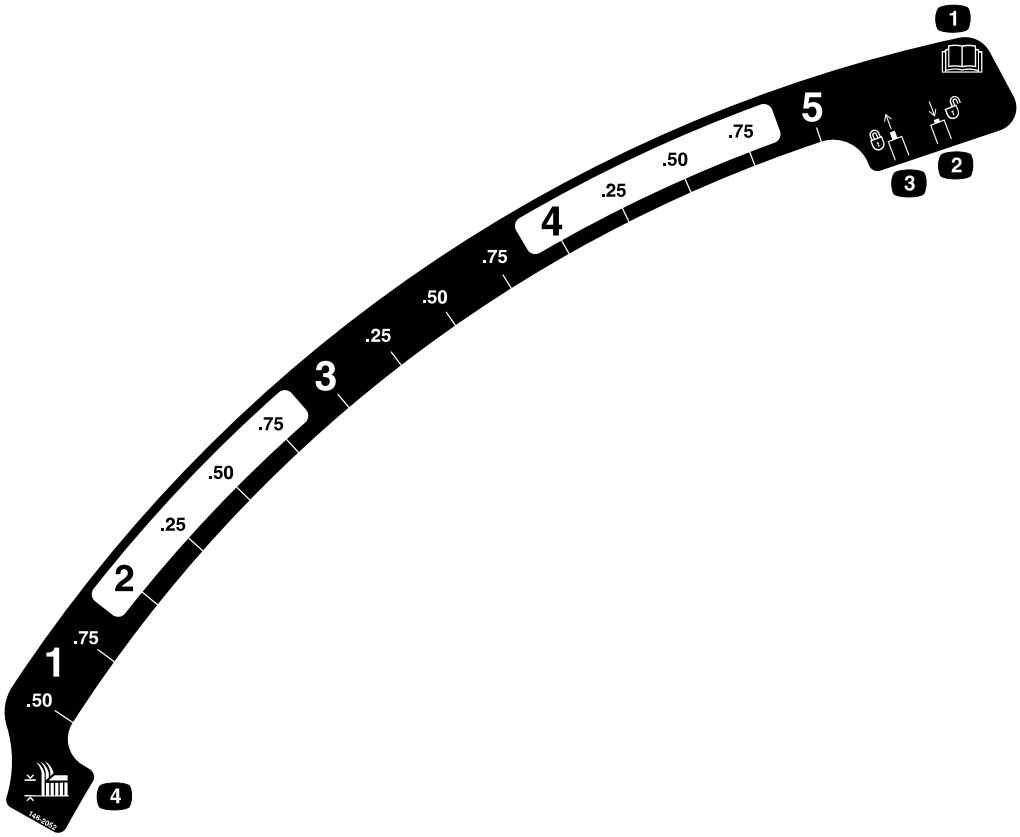

decal146-2052

1. Read the *Operator's Manual*.
2. Push button down to unlock
3. Release button to lock
4. Height of cut

Decal Part: 146-8485

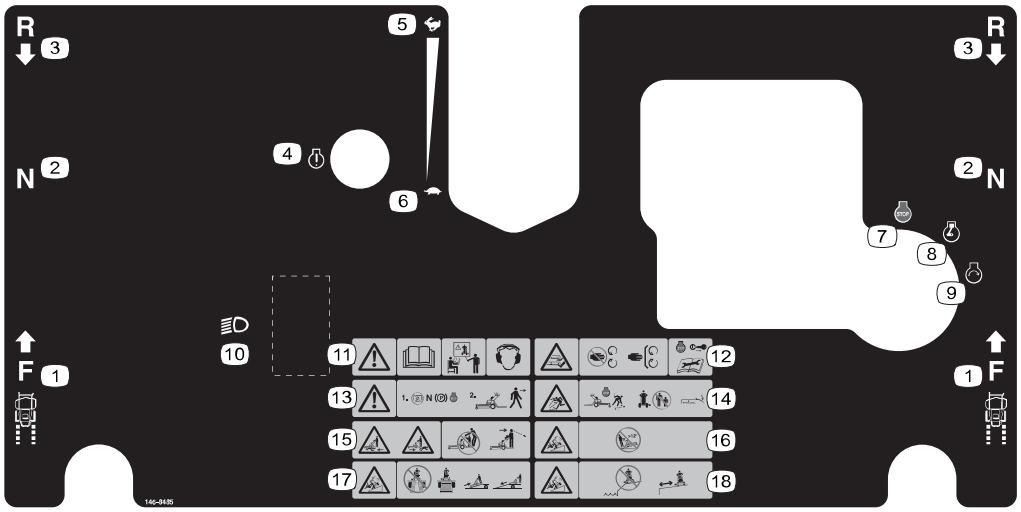

decal146-8485

1. Forward
2. Neutral
3. Reverse
4. Check engine
5. Throttle—fast
6. Throttle—slow
7. Engine—off
8. Engine—on
9. Engine—start
10. Optional light accessory
11. Warning—read the Operator's Manual; all operators should be trained before operating the machine; wear hearing protection.
12. Warning—stay away from moving parts; keep all guards and shields in place; shut off the engine and remove the key before performing maintenance.
13. Warning—disengage the PTO, move the drive levers to the neutral position, engage the parking brake, and stop the engine before leaving the machine.
14. Thrown object hazard—shut off the machine, wait for moving parts to stop, and pick up debris before mowing; keep bystanders away; lower the deflector before operating the machine.
15. Crushing/dismemberment hazard of bystanders—do not carry passengers, look forward and down when operating the machine, look behind and down when moving in reverse.
16. Tipping hazard—only operate across slopes; do not operate up and down slopes; do not use on slopes greater than 12 degrees.
17. Tipping hazard—do not use dual ramps when loading onto a trailer; use a singular ramp wide enough for the machine; back up the ramp when loading the machine and drive forward off the ramp when unloading.
18. Tipping hazard—do not use the machine near drop-offs or on slopes; stay at least 2 widths of the machine away from drop-offs.

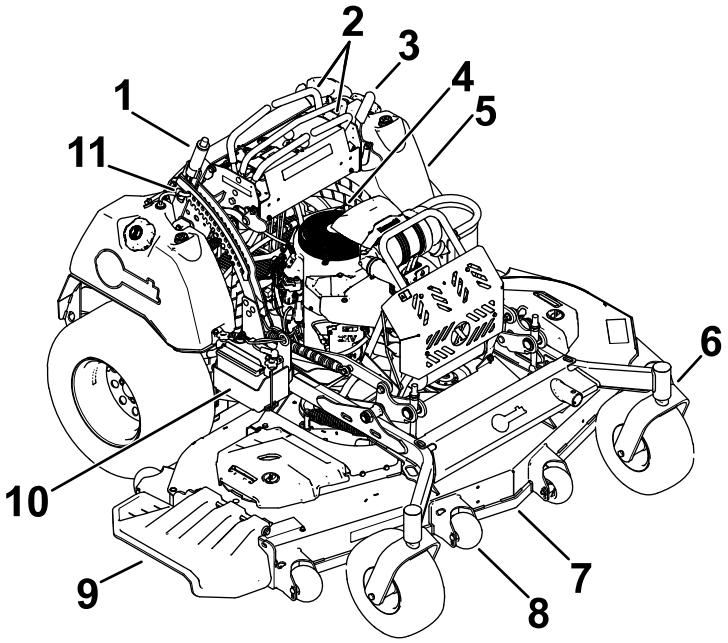

G618512

1. Deck-lift handle
2. Motion-control levers
3. Parking brake
4. Engine
5. Fuel tank
6. Caster wheel
7. Mower deck
8. Anti-scalp roller
9. Discharge chute
10. Battery
11. Height-of-cut adjustment pin

Control Panel

Become familiar with all the controls before starting the engine and operating the machine.

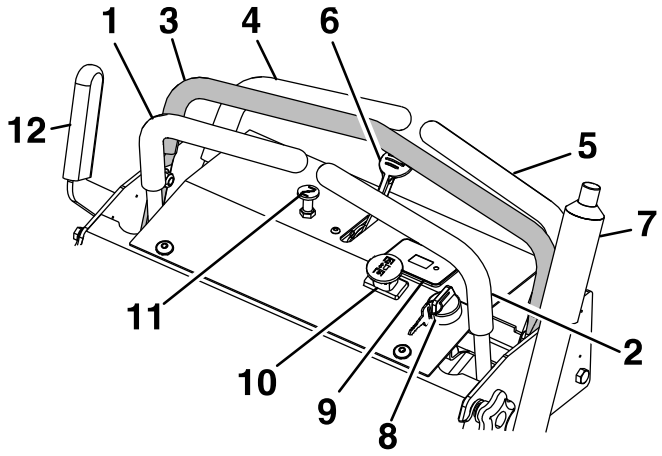

G557915

1. Left motion forward control lever
2. Right motion forward control lever
3. Reference bar
4. Left motion reverse control lever
5. Right motion reverse control lever
6. Throttle
7. Height of cut lever
8. Ignition
9. Message display
10. PTO switch
11. Choke (all models except EFI)
12. Park brake

Hour Meter

The hour meter records the number of hours that the engine has operated.

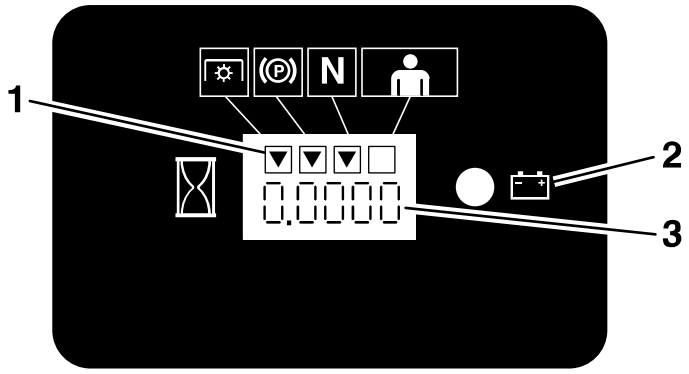

G519141

(1) LCD indicators
(2) Low voltage indicator
(3) Hour/voltage display

The hour meter is recording when the decimal point is flashing in the hour/voltage display.

The hours are displayed when the key is off or when the machine is running.

Note: If the ignition key is turned to the ON position for a few seconds before cranking the engine, the battery voltage will display in the area where the hours are normally displayed.

The LCD indicators appear when each of the controls meet the “safe to start” mode.

Key Switch

Use the key switch to start or shut off the engine.

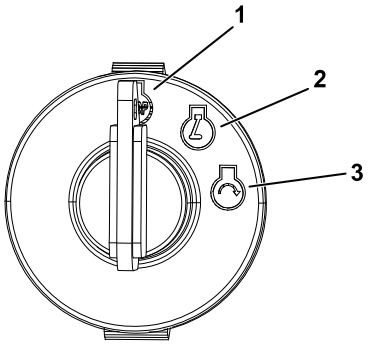

G375755s

(1) Shut off the engine
(2) Run the engine
(3) Start engine

Throttle Control

The throttle is used to control the engine speed.

Throttle Control (continued)

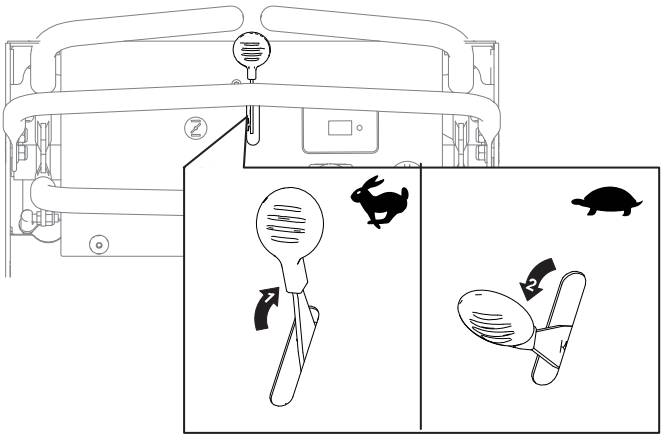

G557928

1 Fast

2 Slow

The machine has a clutch saver, which allows the throttle to automatically reduce engine RPM:

- when the PTO switch is engaged or disengaged.
- when stepping off the platform with the PTO engaged.

The engine RPM will resume its setting when the PTO is reset.

Power-Takeoff (PTO) Switch

The power-takeoff (PTO) switch engages and disengages power to the mower blades.

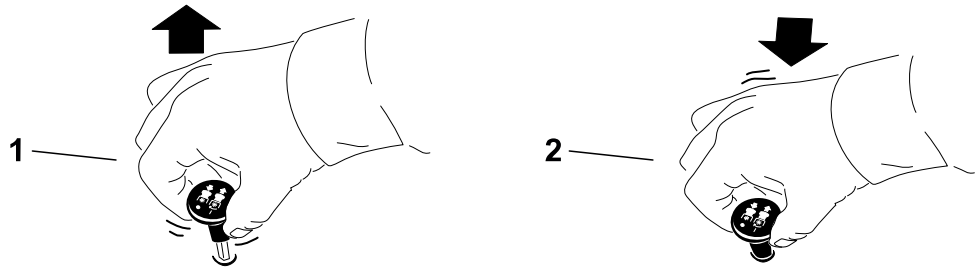

G442765

1 Engaged

2 Disengaged

Motion-Control Levers

The motion control levers control the forward and reverse motion of the machine.

Moving the levers forward or backward turns the wheel on the same side forward or reverse respectively. Wheel speed is proportional to the amount the lever is moved.

Note: When the motion control levers are in the neutral position, and park brake is engaged, a LCD indicator displays on the message display.

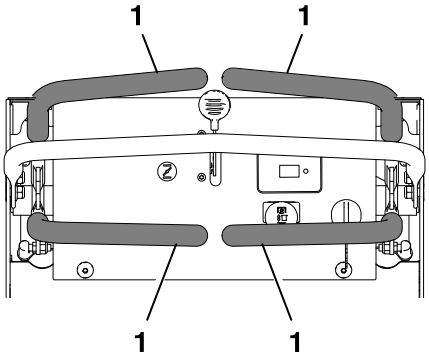

G345124s

1 Neutral position

Parking-Brake Lever

The brake lever engages a parking brake on the drive wheels.

Note: The LCD indicator appears in the message display on the front console when the park brake is engaged.

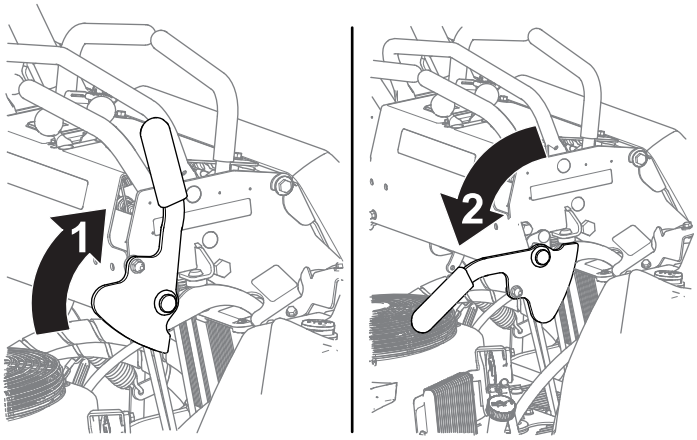

G618533

1 Parking brake engaged

2 Parking brake disengaged

When parking on a steep slope, the wheels must be chocked or blocked in addition to the brake being engaged. The machine must be tied down and brake engaged when transporting.

The parking brake must be disengaged before moving the motion control out of neutral or the engine must begin shutdown.

Deck-Lift Handle

To unlatch from transport, slightly pull the handle rearward and push the button down on top of the lever to disengage the transport lock. Allow the handle to move forward to lower the cutting deck to the cut height that has been set.

To raise to transport position, push the button down on top of the lever to disengage the deck lift latch. Pull the handle all the way rearward and release the button to latch the cutting deck into the raised transport position.

Fuel-Shutoff Valve

Close the fuel-shutoff valve when transporting or storing the machine.

Electronic-Control Unit Malfunction-Indicator Light

The electronic-control unit (ECU) continuously monitors the operation of the EFI system.

If a problem or fault within the system is detected, the malfunction-indicator light (MIL) illuminates.

The MIL is the red light located in the control panel.

Once the MIL illuminates, make initial troubleshooting checks.

If these checks do not correct the problem, further diagnosis and servicing by an Authorized Service Dealer is necessary.

Specifications

Note: Specifications and design are subject to change without notice.

Dimensions

	52in Models	60in Models	72in Models
Width (deflector up)	156.6 cm (61.66 inches)	161.9 cm (63.76 inches)	186.5 cm (73.43 inches)
Width (deflector down)	164.6 cm (64.79 inches)	185.09 cm (72.87 inches)	215.5 cm (84.84 inches)
Tread width (center to center of tires, widthwise)	136.3 cm (53.66 inches)	150.0 cm (59.04 inches)	150.0 cm (59.04 inches)
Length	178.9 cm (70.45 inches)	186.3 cm (73.37 inches)	195.9 cm (77.12 inches)
Height	124 cm (48.9 inches)	124 cm (48.9 inches)	124 cm (48.9 inches)
Weight	567 kg (1250 lb)	594 kg (1310 lb)	635 kg (1400 lb)

Engine

- Engine oil type: Exmark 4-Cycle Premium Engine Oil
- RPM full speed: 3550 to 3650 RPM (no load)

Fuel System

- Fuel capacity:

  - Left tank: 27.9 L (7.4 US gallons)
  - Right tank: 24.6 L (6.5 US gallons)
- Fuel filter: replaceable in-line

Electrical System

- Charging system: Flywheel Alternator
- Kawasaki charging capacity: 30 Amp
- Battery type: BCI group U1
- Battery voltage: 12V
- Polarity: negative ground
- Fuses:
  - 20 Amp charging system fuse
  - 15 Amp accessory fuse
  - 20 Amp power fuse

Safety Interlock System

- The LCD indicators appear for the park brake, PTO, Neutral, and operator presence in the message display on the front control panel.
- The PTO must be disengaged with motion control levers in the neutral position and park brake engaged to start the engine. (It is not necessary for the operator be on the platform in order to start the engine.)
- The mower blades will stop if the operator steps off the platform.

Operator Controls

Steering Control: The fingertip drive control levers provide independent speed control, braking and neutral to each drive wheel for moving forward or reverse, stopping, and power turning.

Transmission

- 2 unitized hydrostatic transmissions
- Hydraulic fluid: Exmark Premium Hydro Oil.
- Hydraulic fluid capacity: 6.4 L (6.73 qt)
- Hydraulic filter: replaceable spin-on type
- Speeds:
  - 19 km/hr (0 to 12 mph) forward
  - 8 km/hr (0 to 5.5 mph) reverse

Tires & Wheels

Front Caster Tires

	Semi-Pneumatic
Quantity	2
Tread	Smooth
Size	15 x 6-6

Drive Tires

	52in Models	60in Models	72in Models
Quantity	2		
Tread	Hoosier Grassmaster		
Size	24 x 9.0-12	24 x 12.0-12	
Ply rating	4		
Pressure	90 kPa (13 psi)		

Cutting Deck

	52in Models	60in Models	72in Models
Cutting width	132.1 cm (52 inches)	152.4 cm (60 inches)	182.9 cm (72 inches)
Blade size	45.7 cm (18.00 inches)	52.1 cm (20.50 inches)	62.2 cm (24.5 inches)
Discharge	Side		
Blade spindles	Solid steel spindles with 25.4 mm (1 inch) I.D. bearings		
Number of anti-scalp rollers	3	4	6
Deck depth	14 cm (5.5 inches)		
Cutting height adjustment	3.8 cm (1.5 inch) to 12.7 cm (5 inches) in 6.35 mm (1/4 inch) increments		

Torque Requirements

Bolt location	Torque
Cutter housing spindle nut	176 to 217 N·m (130 to 160 ft-lb)
Blade mounting bolt (lubricate with anti-seize compound)	68 to 81 N·m (50 to 60 ft-lb)
Engine mounting bolts	41 to 47 N·m (30 to 35 ft-lb)
Wheel lug nuts	115 to 142 N·m (85 to 105 ft-lb)

Torque Requirements (continued)

Bolt location	Torque
Wheel motor mounting bolts	92 to 111 N·m (68 to 82 ft-lb)
Engine deck to mower deck	115 to 142 N·m (85 to 105 ft-lb)

Attachments/Accessories

A selection of Exmark approved attachments and accessories is available for use with the machine to enhance and expand its capabilities. Contact your Authorized Service Dealer or authorized Exmark distributor or go to www.Exmark.com for a list of all approved attachments and accessories.

To ensure optimum performance and continued safety certification of the machine, use only genuine Exmark replacement parts and accessories.

Before Operation Safety

- Evaluate the terrain to determine what accessories and attachments are needed to properly and safely perform the job. Only use accessories and attachments approved by Exmark.
- Inspect the area where the machine is to be used and remove all rocks, toys, sticks, wires, bones, and other foreign objects. These can be thrown or interfere with the operation of the machine and may cause personal injury to the operator or bystanders.
- This mower was designed for one operator only. Do not carry passengers.
- Wear appropriate personal protective equipment such as safety glasses, long pants, substantial slip-resistant footwear, and hearing protection. Tie back long hair and avoid loose clothing and loose jewelry which may get tangled in moving parts.
- This machine produces sound levels in excess of 85 dBA at the operator's ear and can cause hearing loss through extended periods of exposure. Wear hearing protection when operating this machine.
- Check that the following items are in place and in proper working condition: the operator presence controls, safety switches, guards, shields, discharge deflector and/or the entire grass catcher system. Do not operate the machine unless they are in proper working condition. Replace worn or deteriorated parts with genuine Exmark parts when necessary.

⚠ DANGER ⚠

It is essential that operator safety mechanisms be connected and in proper operating condition prior to use. Contacting the blade will result in serious personal injury.

Shut off the engine, remove the key, and wait for all moving parts to stop before leaving the operating position. When the key is turned to the OFF position, the engine should shut off and the blade should stop. If not, stop using the machine immediately and contact an Authorized Service Dealer.

- Do not operate the mower when people, especially children, or pets are in the area. Shut off the machine and attachment(s) if anyone enters the area.
- Do not operate the machine without the entire grass collection system, discharge deflector, or other safety devices in place and in proper working condition. Grass catcher components are subject to wear, damage and deterioration, which could expose moving parts or allow objects to be thrown. Frequently check for worn or deteriorating components and replace them with the manufacturer's recommended parts when necessary.

Fuel Safety

⚠ DANGER ⚠

Gasoline is extremely flammable and vapors are explosive.

A fire or explosion from gasoline can burn you, others, and cause property damage.

- **Fill the fuel tank outdoors on level ground, in an open area, when the engine is cold. If fuel is spilled, do not attempt to start the engine. Move away from the area of the spill and avoid creating any source of ignition until fuel vapors have dissipated.**
- **Do not refill the fuel tank or drain the machine indoors or inside an enclosed trailer.**
- **Never smoke when handling gasoline, and stay away from an open flame or where gasoline fumes may be ignited by spark.**
- **Add fuel before starting the engine. Never remove the cap of the fuel tank or add fuel when engine is running or when the engine is hot.**
- **Store gasoline in an approved container and keep it out of the reach of children.**
- **Do not operate without entire exhaust system in place and in proper working condition.**

- In certain conditions during fueling, static electricity can be released causing a spark which can ignite gasoline vapors.
  - Do not fill containers inside a vehicle or on a truck or trailer bed with a plastic liner. Always place containers on the ground and away from your vehicle before filling.
  - When practical, remove gas-powered equipment from the truck or trailer and refuel the equipment with its wheels on the ground. If this is not possible, then refuel such equipment on a truck or trailer from a portable container, rather than from a gasoline dispenser nozzle.
  - If a gasoline dispenser nozzle is used, keep the nozzle in contact with the rim of the fuel tank or container opening at all times until fueling is complete. Do not use a nozzle lock open device.
- Do not overfill the fuel tank. Fill the fuel tank to the bottom of the filler neck. The empty space in the tank allows gasoline to expand. Overfilling may result in fuel leakage or damage to the engine or emission system.
- Gasoline is harmful or fatal if swallowed. Long-term exposure to vapors may cause serious injury and illness.
  - Avoid prolonged breathing of vapors.
  - Keep face away from nozzle and gas tank/container opening.
  - Keep away from eyes and skin.
- To help prevent fires:
  - Keep engine and engine area free from accumulation of grass, leaves, excessive grease or oil, and other debris which can accumulate in these areas.

Fuel Safety (continued)

– Clean up oil and fuel spills and remove fuel soaked debris.

– Allow the machine to cool before storing the machine in any enclosure. Do not store the machine or fuel container, or refuel, where there is an open flame, spark, or pilot light such as on a water heater or other appliance.

Fuel

Fuel Specifications

Capacity	Left tank 27.9 L (7.4 US gallons); right tank 24.6 L (6.5 US gallons)
Type	Unleaded gasoline
Minimum octane rating	87 (US) or 91 (research octane; outside the US)
Ethanol	No more than 10% by volume
Methanol	None
MTBE (methyl tertiary butyl ether)	Less than 15% by volume
Oil	Do not add to the fuel

Use only clean, fresh (no more than 30 days old), fuel from a reputable source.

IMPORTANT

To reduce starting problems, add fuel stabilizer/conditioner to fresh fuel as directed by the fuel-stabilizer/conditioner manufacturer.

Filling the Fuel Tanks

1. Park the machine on a level surface, disengage the PTO, and engage the parking brake.
2. Shut off the engine, remove the key, and wait for all moving parts to stop before leaving the operating position.
3. Clean around the fuel-tank cap (1) and then remove it.
4. Fill the fuel tank to the bottom of the filter neck.

   Note: Do not fill the fuel tank completely full. The empty space in the tank allows the fuel to expand.
5. Install the fuel-tank cap securely. Wipe up any spilled fuel.

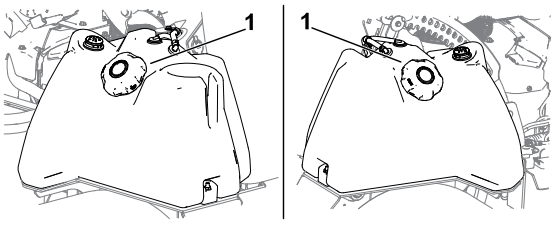

G618642

Performing Daily Maintenance

Before starting the machine each day, perform the Each Use/Daily procedures listed in the Maintenance Schedule.

Break-In Time

New engines take time to develop full power. Mower decks and drive systems have higher friction when new, placing additional load on the engine. Allow 40 to 50 hours of break-in time for new machines to develop full power and best performance.

Safety-Interlock System Checks

⚠ WARNING ⚠

If the safety-interlock switches are disconnected or damaged, the machine could operate unexpectedly, causing personal injury.

- **Do not tamper with the interlock switches.**
- **Check the operation of the interlock switches daily and replace any damaged switches before operating the machine.**

Note: If the machine does not pass any of these tests, do not operate the machine. Contact an Authorized Service Dealer.

Verifying that the Engine Starts Normally

Note: It is not necessary for the operator to be on the platform to start the engine.

Refer to the table below to verify that the engine starts normally.

	System				
	Parking Brake	**PTO (Blades)**	**Motion Control Levers**	**Operator**	**Outcome**
State of System	Engaged 	Disengaged 	In neutral 	On platform or off the platform 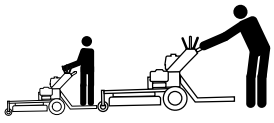	Starter should crank 

Verifying that the Engine Starts Normally (continued)

Note: The starter will crank with the PTO switch in the ON (pulled up) position; however, the system will disengage the PTO and a reset PTO error will occur. Engaging the PTO will require the operator to reset the PTO switch by turning it OFF (pushed down) and then turning it ON.

Checking the Engine Starting Circuit

Note: The state of system item that is bold is being checked in each scenario.

Refer to the table below to check the function of the engine starting circuit.

	System				
	Parking Brake	**PTO (Blades)**	**Motion Control Levers**	**Operator**	**Outcome**
State of System	**Disengaged**  G604125	Disengaged 	In neutral 	On platform or off the platform 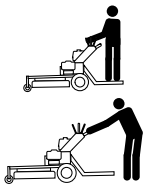	Starter must not crank 
	Engaged 	Disengaged 	*** Levers not in neutral** both levers moved forward or rearward, or either right or left lever moved forward or rearward 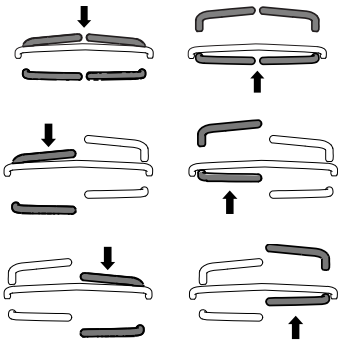	On platform or off the platform 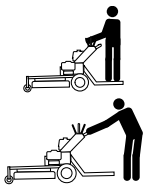	Starter must not crank 

Checking the Engine Starting Circuit (continued)

Note: First disengage the parking brake, move the motion controls out of neutral, re-engage the parking brake, then continue checking the scenario.

	System				
	Parking Brake	**PTO (Blades)**	**Motion Control Levers**	**Operator**	**Outcome**
State of System	**Disengaged** 	Up position 	In neutral 	On platform or off the platform 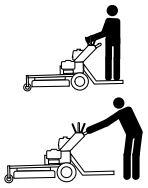	Starter must not crank 

Checking the Shutdown Circuit

Note: The state of system item(s) that is bold is being checked in each scenario.

Refer to the table below to check the function of the shutdown circuit .

	System					
	Engine	**Parking brake**	**PTO (Blades)**	**Motion Control Levers**	**Operator**	**Outcome**
State of System	Running idle (1/3 throttle) 	Engaged or disengaged 	**Engaged** 	**Levers in neutral** 	Off of the platform 	**PTO** must begin shutdown within 1 second; engine stays running. 

During Operation

During Operation Safety

The operator must use their full attention when operating the machine. Do not engage in any activity that causes distractions; otherwise, injury or property damage may occur.

⚠ WARNING ⚠

Operating engine parts, especially the muffler, become extremely hot. Severe burns can occur on contact and debris, such as leaves, grass, brush, etc. can catch fire.

Clean the machine as stated in the Maintenance section. Keep engine and engine area free from accumulation of grass, leaves, excessive grease or oil, and other debris which can accumulate in these areas.

- Operate the engine only in well-ventilated areas. Exhaust gases contain carbon monoxide, which is an odorless deadly poison.
- Do not operate the machine while ill, tired, or under the influence of alcohol or drugs.
- Operate the machine only in good visibility and appropriate weather conditions. Do not operate the machine when there is the risk of lightning.
- Keep away from holes, ruts, bumps, rocks, and other hidden hazards. Use care when approaching blind corners, shrubs, trees, tall grass or other objects that may hide obstacles or obscure vision. Uneven terrain could overturn the machine or cause the operator to lose their balance or footing.
- Start the engine with your feet well away from the blades.

During Operation Safety (continued)

- Do not operate the machine without all safety shields, guards, switches, and other devices in place and in proper working condition.
- Keep your hands and feet away from the moving parts. Keep clear of the discharge opening.
- Do not mow with the discharge deflector raised, removed, or altered unless there is a grass-collection system or mulch kit in place and working properly.
- Never raise the deck with blades running.
- Be aware of the mower discharge path and direct discharge away from others. Avoid discharging material against a wall or obstruction as the material may ricochet back toward the operator. Stop the blades, slow down, and use caution when crossing surfaces other than grass and when transporting the mower to and from the area to be mowed.
- Be alert, slow down and use caution when making turns. Do not mow in reverse unless it is absolutely necessary. Always look down and behind you before moving the machine in reverse.
- Park the machine on level ground. Stop engine, wait for all moving parts to stop, and remove key:
  - Before checking, cleaning or working on the mower.
  - After striking a foreign object or abnormal vibration occurs (inspect the mower for damage and make repairs before restarting and operating the mower).
  - Before clearing blockages.
  - Whenever you leave the mower. Do not leave a running machine unattended.
- Stop engine, wait for all moving parts to stop:
  - Before refueling.
  - Before dumping the grass catcher.
  - Before making height adjustments.
- Tragic accidents can occur if the operator is not alert to the presence of children. Children are often attracted to the machine and the mowing activity. Never assume that children will remain where you last saw them.
  - Keep children out of the mowing area and under the watchful care of another responsible adult, not the operator.
  - Be alert and turn the machine off if children enter the area.
  - Before and while backing or changing direction, look behind, down, and side-to-side for small children.
  - Never allow children to operate the machine.
  - Do not carry children, even with the blades shut off. Children could fall off and be seriously injured or interfere with the safe operation of the machine. Children that have been given rides in the past could suddenly appear in the working area for another ride and be run over or backed over by the machine.

During Operation Safety (continued)

Slope Safety

- Slopes are a major factor related to loss of control and rollover accidents, which can result in severe injury or death. The operator is responsible for safe slope operation. Operating the machine on any slope requires extra caution. Before using the machine on a slope, the operator must:
  - Review and understand the slope instructions in the manual and on the machine.
  - Evaluate the site conditions of the day to determine if the slope is safe for machine operation. Use common sense and good judgment when performing this evaluation. Changes in the terrain, such as moisture, can quickly affect the operation of the machine on a slope.
- Operate across slopes, never up and down. Avoid operation on excessively steep or wet slopes. Poor footing could cause a slip and fall accident.
- Identify hazards at the base of the slope. Do not operate the machine near drop offs, ditches, embankments, water or other hazards. The machine could suddenly roll over if a wheel goes over the edge or the edge collapses. Keep a safe distance between the machine and any hazard. Use a hand held tool to operate in these areas.
- Avoid starting, stopping or turning the machine on slopes. Avoid making sudden changes in speed or direction; turn slowly and gradually.
- Do not operate a machine under any conditions where traction, steering or stability is in question. Be aware that operating the machine on wet grass, across slopes or downhill may cause the machine to lose traction. Loss of traction to the drive wheels may result in sliding and a loss of braking and steering. The machine can slide even if the drive wheels are stopped.
- Remove or mark obstacles such as ditches, holes, ruts, bumps, rocks or other hidden hazards. Tall grass can hide obstacles. Uneven terrain could overturn the machine.
- If you lose control of the machine, step away from the direction of travel of the machine.
- Always keep the machine in gear when going down slopes. Do not coast downhill.

Starting the Engine

1. With the motion control levers in the NEUTRAL position, pull the parking brake up and rearward to engage the parking brake.
2. Push down on the PTO switch to the DISENGAGE position.
3. Place the throttle midway between the SLOW and FAST positions.
4. Turn the ignition switch to the START position. Release the switch as soon as the engine starts.

IMPORTANT

Do not crank the engine continuously for more than 10 seconds at a time. If the engine does not start, allow a 60 second cool-down period between starting attempts. Failure to follow these guidelines can burn out the starter motor.

Stopping the Engine

1. Bring the machine to a full stop.
2. With the motion control levers in the NEUTRAL position, place the throttle midway between the SLOW and FAST positions.
3. Push down on the PTO switch to disengage the blades.
4. Engage the parking brake.
5. Allow the engine to run for a minimum of 15 seconds, then turn the ignition switch to the OFF position to stop the engine.

Operating the Mower Blade-Control Switch (PTO)

⚠ DANGER ⚠

The rotating blades under the mower deck are dangerous. Blade contact will cause serious injury or death.

Do not put your hands or feet under the mower or mower deck when the blades are engaged.

⚠ DANGER ⚠

An uncovered discharge opening allows objects to be thrown toward you or bystanders. Also, contact with the blade could occur. Thrown objects or blade contact will cause serious injury or death.

Do not operate the mower with the discharge deflector raised, removed, or altered unless a grass collection system or mulch kit is in place and working properly.

Note: The machine has a clutch saver, which allows the throttle to automatically reduce engine RPM when the PTO switch is engaged/disengaged or when stepping off the platform. The engine RPM will resume its setting when stepping back onto the platform and resetting the PTO.

1. Move the throttle control to the FAST position.
2. Engage the blade-control switch.

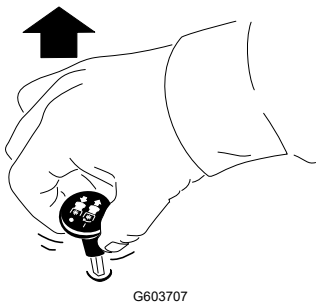

G603707

3. Mow as desired.

Operating the Mower Blade-Control Switch (PTO) (continued)

4. Disengage the blade-control switch.

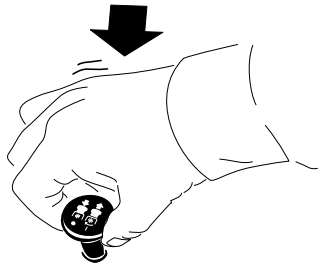

G603708

Driving the Machine

⚠ CAUTION ⚠

Machine can spin very rapidly by positioning one lever too much ahead of the other. Operator may lose control of the machine, which may cause damage to the machine or injury.

- **Use caution when making turns.**
- **Slow the machine down before making sharp turns.**

IMPORTANT

To begin movement (forward or backward), the brake lever must be disengaged (pushed forward) before the motion control levers can be moved.

When the motion control levers are positioned in the center, the drive system is in the neutral position.

Note: The N LCD indicator appears when the levers are in the neutral position and the brake is engaged.

With the brake disengaged, the drive system is in the operate position.

Driving Forward

1. Step onto the platform of the machine.

   Note: The OPC LCD indicator appears when the operator is on the platform.
2. Make sure the motion control levers are in the neutral position.
3. Release the parking brake.
4. To move forward in a straight line, move both rear levers forward with equal pressure.

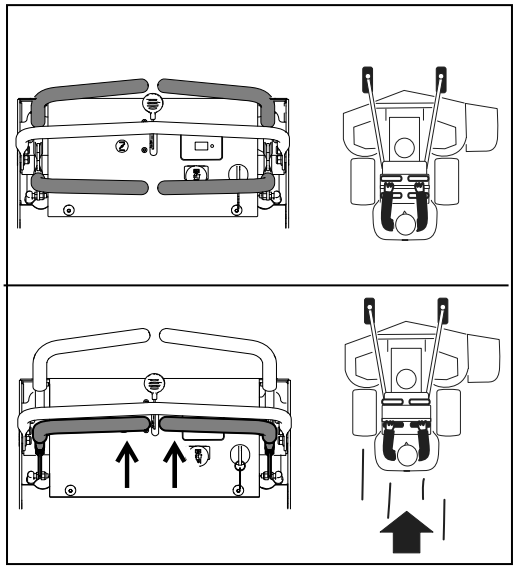

G586433

5. To turn left or right, pull the motion control lever back toward neutral in the desired turn direction. The machine will move faster the farther the motion control levers are moved from the neutral position.

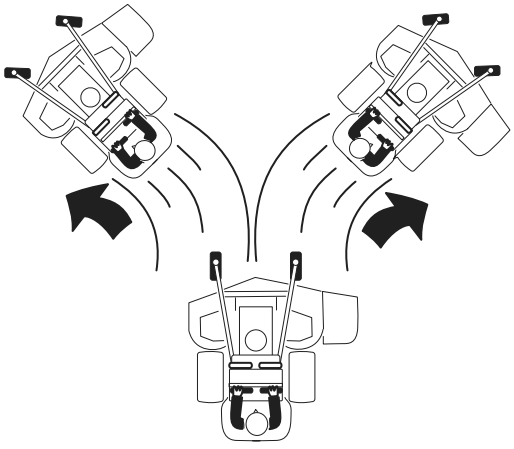

G344905s

6. To stop, position both motion control levers in the neutral operate position.

Driving Backward

1. Move both motion-control levers to the NEUTRAL position.
2. Slowly pull the motion-control levers rearward with equal pressure to move rearward.
   - To turn right, release pressure on the right motion control lever.
   - To turn left, release pressure on the left motion control lever.

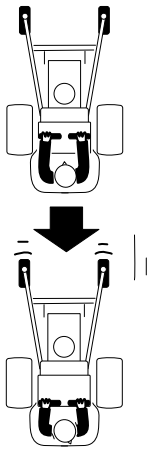

G192741s

3. To stop, position both motion control levers in the NEUTRAL position.

Adjusting the Height of Cut

The cutting height of the mower deck is adjusted from 3.8 cm to 12.7 cm (1.5 to 5 inches) in 6.35 mm (1/4 inch) increments.

1. Stop the machine and move the motion control levers outward to the neutral locked position.
2. Disengage the PTO switch.
3. Push the button down on top of the lever to disengage the deck lift latch. Pull the handle all the way rearward and release the button to latch the cutting deck into the 12.7 cm (5.0 inch) transport position.

   Note: When changing the cutting height positions, always come to a complete stop and disengage the PTO.

Adjusting the Height of Cut (continued)

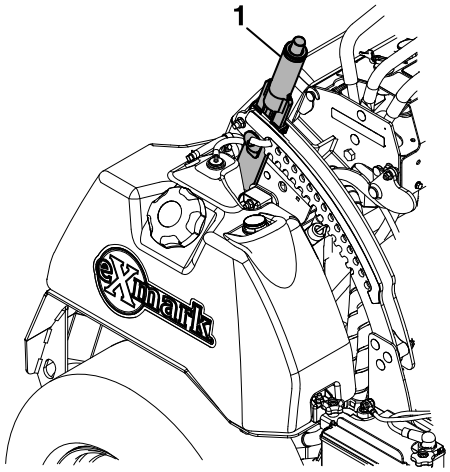

G505957s

(1) Deck lift handle

4. Insert the height adjustment pin into the hole corresponding to the desired cutting height. See the decal on the side of the deck lift plate for cut heights.
5. Slightly pull the deck lift handle rearward and push the button down on top of the lever to disengage the transport lock. Slowly release the handle downward to allow the deck to lower to the cutting height. Release the button.

After Operation

After Operation Safety

- Park the machine on a level surface, disengage the drives, engage the parking brake, shut off the engine and wait for all moving parts to stop before leaving the operator's position.
- Wait for the machine to cool before servicing, adjusting, fueling, cleaning, or storing it.
- Clean grass, leaves, excessive grease and oil, and other debris from the mower deck, muffler, drives, grass catcher, and engine area to help prevent fires.
- Close the fuel-shutoff valve (if equipped) before storing or transporting the machine.
- Use full-width ramps for loading the machine into a trailer or truck.
- Tie the machine down securely using straps, chains, cable, or ropes. Both front and rear straps should be directed down and outward from the machine.

Adjusting the Anti-Scalp Rollers

Whenever you change the height of cut, adjust the height of the anti-scalp rollers.

Adjusting the Anti-Scalp Rollers (continued)

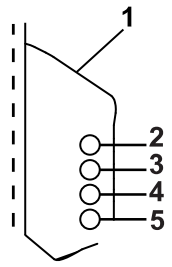

g463656s

1. Anti-scalp roller mounting bracket
2. 51 mm (2.0 inches) cutting height
3. 64 mm (2.5 inches) cutting height
4. 76 mm (3.0 inches) cutting height
5. 90 mm (3.5 inches) cutting height

1. Park the machine on a level surface, disengage the PTO, and engage the parking brake.
2. Shut off the engine, remove the key, and wait for all moving parts to stop before leaving the operating position.
3. Remove the anti-scalp rollers by removing the nut, spacer, and bolt.

   Note: Adjust the anti-scalp rollers so that the rollers do not touch the ground in normal, flat mowing areas.

   Note: The roller may need to be removed when mowing at 25 mm (1 inch).

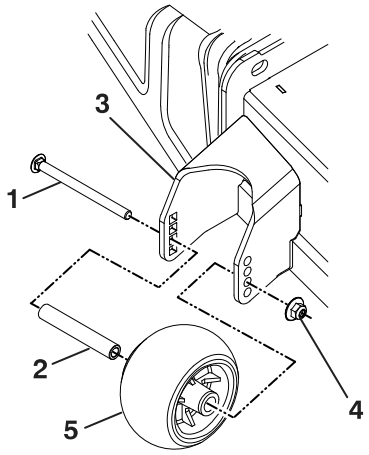

g433945s

1. Bolt
2. Spacer
3. Anti-scalp bracket
4. Nut
5. Anti-scalp roller

4. Install the mounting hardware and torque the nut to **37 to 45 N·m (27 to 33 ft-lb)**.

Cleaning the Machine

Clean the machine after each use.

1. Park the machine on a level surface, disengage the blade-control switch, and move the motion-control levers to the neutral lock position.
2. Shut off the engine, remove the key, and wait for all moving parts to stop before leaving the operating position.
3. Clean grass and debris from cutting unit, muffler, drives, grass catcher, and engine. Use compressed air when possible.

IMPORTANT

You can wash the machine with a mild detergent and water. Do not pressure wash the machine. Avoid excessive use of water, especially near the control panel, under the seat, and around the engine, hydraulic pumps, and motors.

Hauling the Machine

Use a heavy-duty trailer or truck to haul the machine. Use a full-width ramp. Ensure that the trailer or truck has all the necessary brakes, lighting, and marking as required by law. Please carefully read all the safety instructions. Knowing this information could help you or bystanders avoid injury. Refer to your local ordinances for trailer and tie-down requirements.

⚠ WARNING ⚠

Driving on the street or roadway without turn signals, lights, reflective markings, or a slow-moving-vehicle emblem is dangerous and can lead to accidents causing personal injury.

Do not drive the machine on a public street or roadway.

Trailer Requirements

⚠ WARNING ⚠

Loading a machine onto a trailer or truck increases the possibility of tip-over and could cause serious injury or death.

- **Use only a full-width ramp; do not use individual ramps for each side of the machine.**
- **Do not exceed a 12-degree angle between the ramp and the ground or between the ramp and the trailer or truck.**
- **Ensure that the length of ramp is at least 5 times as long as the height of the trailer or truck bed to the ground.**

Hauling the Machine (continued)

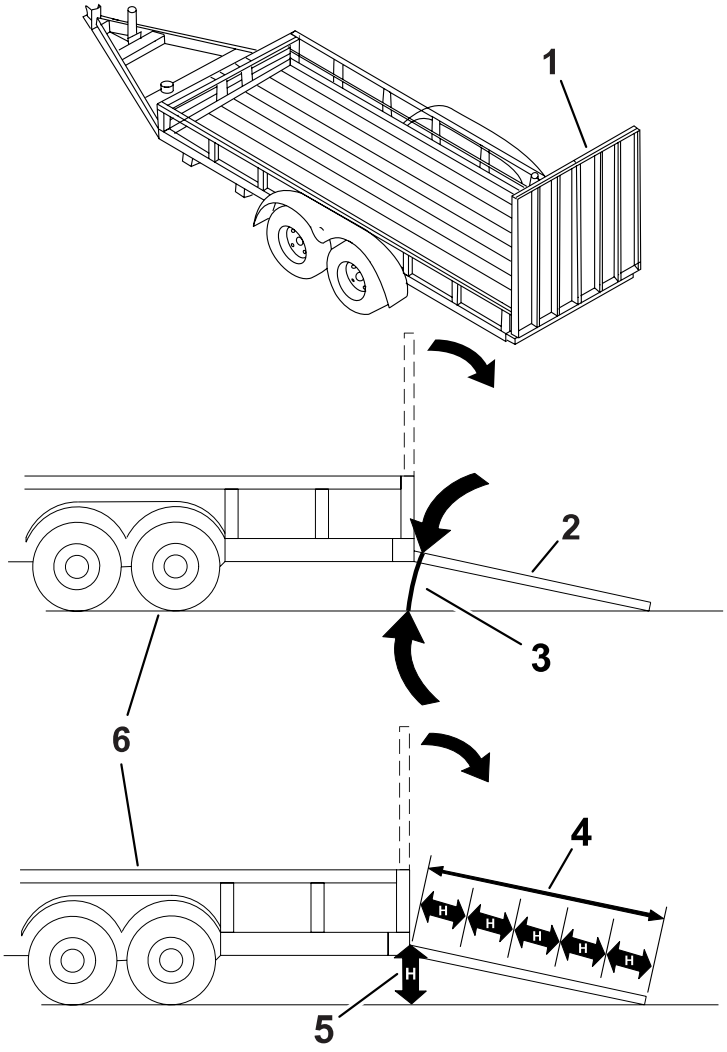

(1) Full-width ramp(s) in stowed position

(2) Side view of full-width ramp in loading position

(3) Not greater than 12 degrees

(4) Ramp is at least 5 times as long as the height of the trailer or truck bed to the ground

(5) H = height of the trailer or truck bed to the ground

(6) Trailer

Loading the Machine

⚠ WARNING ⚠

Loading a machine onto a trailer or truck increases the possibility of tip-over and could cause serious injury or death.

- **Use extreme caution when operating a machine on a ramp.**
- **Back the machine up the ramp and drive it forward down the ramp.**
- **Avoid sudden acceleration or deceleration while driving the machine on a ramp as this could cause a loss of control or a tip-over situation.**

---

1. If using a trailer, connect it to the towing vehicle and connect the safety chains.
2. If applicable, connect the trailer brakes.

Hauling the Machine (continued)

3. Lower the ramp, ensuring that the angle between the ramp and the ground does not exceed 12 degrees.
4. Back the machine up the ramp.
5. Shut off the engine, remove the key, and engage the parking brake.
6. Tie down the machine using straps, chains, cable, or ropes. Refer to local regulations for tie-down requirements.

   Note: Direct the straps down and away from the machine.

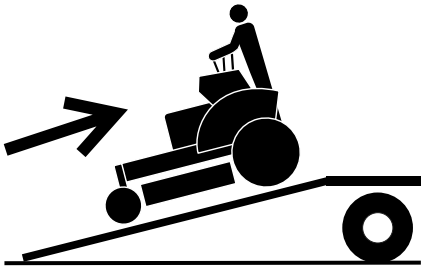

G435630

Unloading the Machine

1. Lower the ramp, ensuring that the angle between the ramp and the ground does not exceed 12 degrees.
2. Drive the machine forward down the ramp.

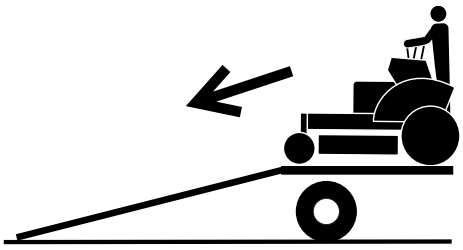

G435632

Moving a Non-Functioning Machine

1. Park the machine on a level surface and disengage the PTO.
2. Shut off the engine, remove the key, and wait for all moving parts to stop before leaving the operating position.
3. Using a wrench (5/8 inch), turn both of the drive-wheel release valves one turn counterclockwise to release the drive system.

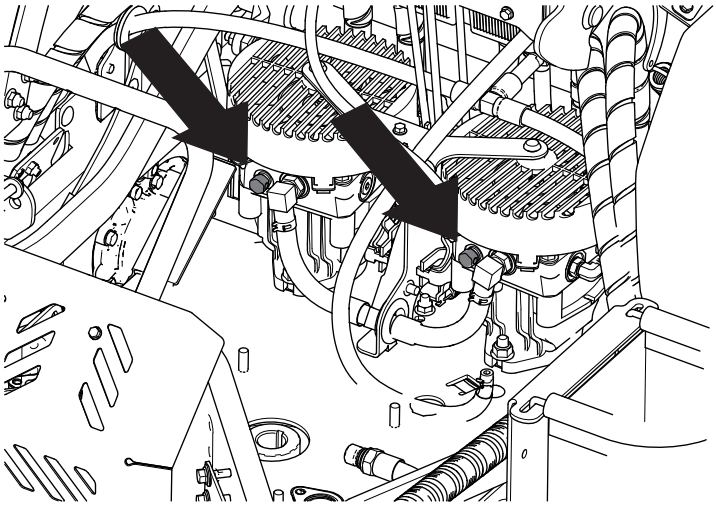

G617795

Moving a Non-Functioning Machine (continued)

IMPORTANT

Do not move the machine faster than 8 km/h (5 mph).

4. Move the machine to the desired location.

IMPORTANT

Do not overtighten the drive-wheel release valves.

IMPORTANT

Do not tow the machine.



5. Turn both of the drive-wheel release valves clockwise and torque to **12 to 15 N·m (110 to 130 in-lb)**.

Maintenance Safety

- If you leave the key in the switch, someone could accidently start the engine and seriously injure you or other bystanders. Remove the key from the switch before you perform any maintenance.
- Before cleaning, servicing, or adjusting the machine, do the following:
  - Park the machine on a level surface.
  - Disengage the drives.
  - Engage the parking brake.
  - Shut off the engine and remove the key.
  - Wait for the machine to cool before performing maintenance.
- Do not allow untrained personnel to service the machine.
- Keep your hands and feet away from moving parts or hot surfaces. If possible, do not make adjustments with the engine running.
- If you must run the engine to perform a maintenance adjustment, keep your hands, feet, clothing, and all other parts of your body away from the engine and any moving parts. Keep bystanders away from the machine.
- Perform only those maintenance instructions described in this manual. If major repairs are ever needed or you need assistance, contact an Authorized Service Dealer.
- Keep all guards, shields, switches, and all safety devices in place and in proper working condition. Frequently check for worn or deteriorating components and replace them with genuine Exmark parts when necessary.
- Ensure that all guards are installed securely after maintaining or adjusting the machine.
- Carefully release pressure from components with stored energy.

⚠ WARNING ⚠

Removing or modifying original equipment, parts, and/or accessories, may alter the controllability and safety of the machine. Making unauthorized modifications to the original equipment or failing to use original Exmark parts could lead to serious injury or death.

- Check the parking brake operation frequently. Adjust and service it as required.
- Never tamper with safety devices. Check their proper operation regularly.
- Clean grass, leaves, excessive grease and oil, and other debris from the cutting unit, muffler, drives, grass catcher, and engine compartment to prevent fires.

- Clean up oil or fuel spills and remove fuel-soaked debris.
- Do not rely solely on mechanical or hydraulic jacks to support the machine. Use adequate jack stands.
- Keep all parts in good working condition and all hardware tightened, especially the blade-attachment hardware.
- To ensure optimum performance, use only genuine Exmark replacement parts and accessories. Replacement parts and accessories made by other manufacturers could be dangerous.
- For machines equipped with an accessory frame: If any maintenance or repair requires the accessory frame to be in the raised position, use the cylinder lock to secure the accessory frame in the raised position.

Recommended Maintenance Schedule

Maintenance Service Interval	Maintenance Procedure
After the first 5 hours	Change the engine oil.
After the first 100 hours	Check the wheel lug-nut torque.
After the first 250 hours	Change the hydraulic filter and fluid.
Before each use or daily	Check the engine oil level.
	Clean the engine and exhaust system area.
	Check the safety interlock system.
	Check the mower blades.
	Remove debris from the machine.
	Check for loose fasteners.
Every 40 hours	Check the hydraulic fluid level.
Every 50 hours	Check the tire pressure.
	Check the condition of the belts.
	Check the spark arrestor (if equipped).
Every 80 hours	Remove the engine shrouds and clean the cooling fins.
Every 100 hours	Change the engine oil (more often in severe conditions).
	Clean or replace the spark plugs and reset the gap.
Every 250 hours	Replace the primary air filter (more often in dirty or dusty conditions).
	Change the hydraulic filter and fluid (if using Mobil 1 15W50).
Every 500 hours	Replace the secondary air filter (more often in dirty or dusty conditions).
	Change the hydraulic filter and fluid.
	Check the wheel lug-nut torque.
Yearly	Grease the deck belt idler pivot.

IMPORTANT

Refer to your engine owner's manual for additional maintenance procedures.

Pre-Maintenance Procedures

Removing the Cushion for Rear Access

Lift the thigh pad roughly 30° and remove the rear cushion from machine.

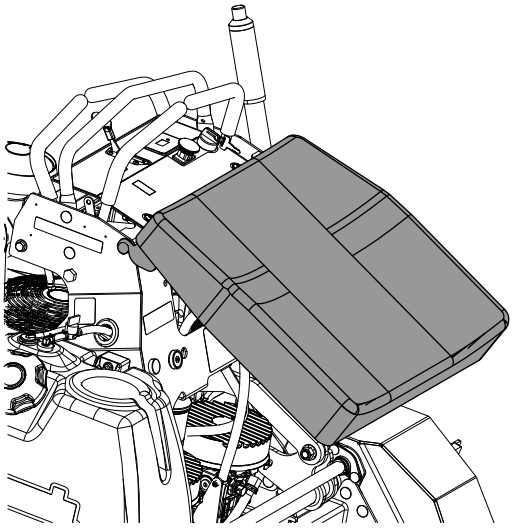

G615708

Removing the Rear Guard

1. Remove the cushion.
2. Remove the 2 knobs securing the rear guard to the machine.

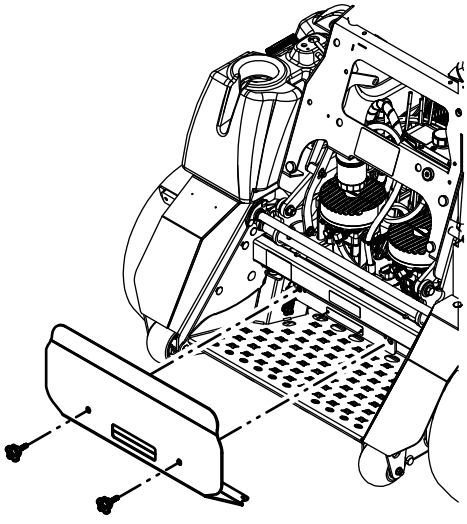

G615710

3. Remove the rear guard.

Installing the Rear Guard

Install the rear guard to the machine and secure it with the 2 knobs.

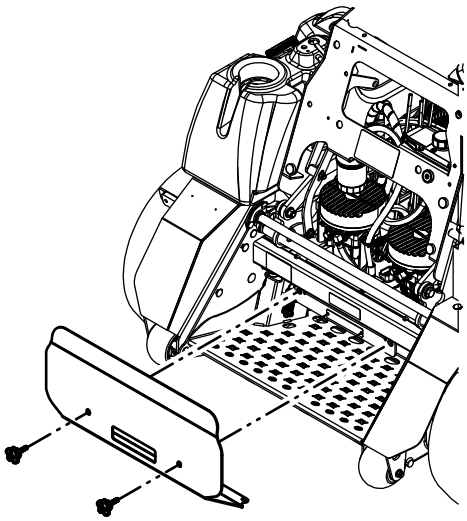

G615710

Lubrication

Lubricating the Grease Fittings

1. Park the machine on a level surface, disengage the PTO, and engage the parking brake.
2. Shut off the engine, remove the key, and wait for all moving parts to stop before leaving the operating position.
3. Lubricate fittings with NLGI grade #2 multi-purpose gun grease.

   Refer to the following chart for fitting locations and lubrication schedule.

Fitting Locations	Initial Pumps	Number of Places	Service Interval
(1) Deck belt idler pivot	1	2	Yearly
(2) Front caster pivots	0	2	Yearly

Lubricating the Grease Fittings (continued)

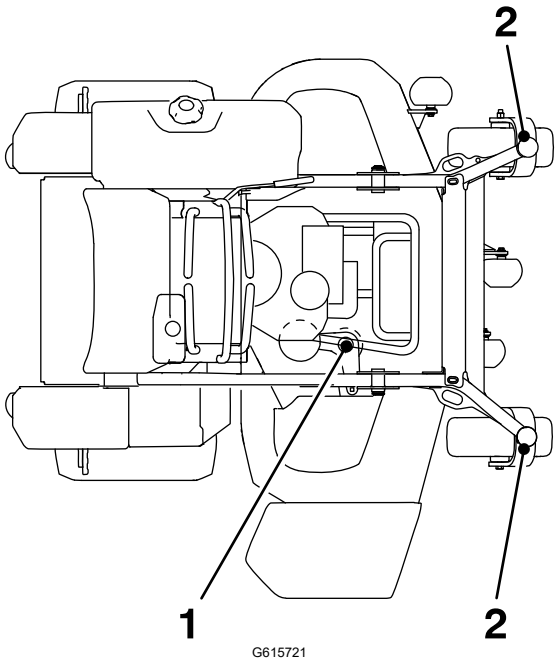

(1) Deck belt idler pivot

(2) Front caster pivot

Greasing the Caster-Wheel Hubs

Grease type: Lithium or molybdenum grease

1. Park the machine on a level surface, disengage the PTO, and move the motion-control levers outward to the PARK position.
2. Shut off the machine, remove the key, and wait for all moving parts to stop before leaving the operating position.
3. Remove the caster wheel from the caster forks.
4. Remove the seal guards from the wheel hub.

Greasing the Caster-Wheel Hubs (continued)

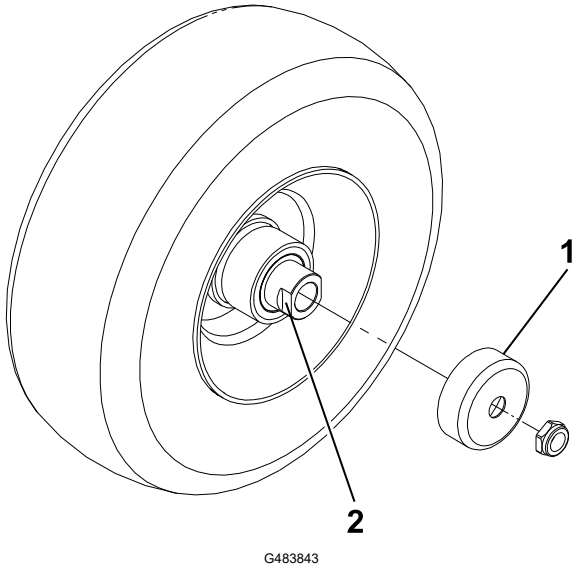

1 Seal guard

2 Spacer nut with wrench flats

5. Remove 1 spacer nut from the axle assembly in the caster wheel.

   Note: Thread-locking adhesive has been applied to lock the spacer nuts to the axle.
6. Remove the axle with the other spacer nut still assembled to it from the wheel assembly.
7. Pry out the seals, inspect bearings for wear or damage, and replace them if necessary.
8. Pack the bearings with a general-purpose grease.
9. Insert 1 bearing and 1 new seal into the wheel.

   Note: You must replace the seals.
10. If both spacer nuts in the axle assembly have been removed (or broken loose), apply thread-locking adhesive to 1 spacer nut, threading it onto the axle with the wrench flats facing outward.

    Note: Do not thread the spacer nut all of the way onto the end of the axle. Leave approximately 3 mm (1/8 inch) from the outer surface of the spacer nut to the end of the axle inside the nut.
11. Insert the assembled nut and axle into the wheel on the side of the wheel with the new seal and bearing.
12. With the open end of the wheel facing up, fill the area inside the wheel around the axle full of general-purpose grease.
13. Insert the second bearing and the new seal into the wheel.
14. Apply thread-locking adhesive to the second spacer nut, threading it onto the axle with the wrench flats facing outward.
15. Torque the nut to **8 to 9 N·m (71 to 80 in-lb)**, loosen it, then torque it to **2 to 3 N·m (20 to 25 in-lb)**.

    Note: Make sure that the axle does not extend beyond either nut.
16. Install the seal guards over the wheel hub and insert the wheel into the caster fork.

Greasing the Caster-Wheel Hubs (continued)

17. Install the caster bolt and tighten the nut fully.

IMPORTANT

To prevent seal and bearing damage, check the bearing adjustment often by spinning the caster wheel. The wheel should not spin freely (more than 1 or 2 revolutions) or have any side play. If the wheel spins freely, adjust the torque on the spacer nut until there is a slight amount of drag, then apply thread-locking adhesive.

Engine Maintenance

Engine Safety

- Keep your hands, feet, face, other body parts, and clothing away from the muffler and other hot surfaces. Wait for the engine to cool before performing maintenance.
- Do not change the engine governor speed or overspeed the engine.

Air Cleaner Service

Removing the Filters

1. Park the machine on a level surface, disengage the PTO, and engage the parking brake.
2. Shut off the engine, remove the key, and wait for all moving parts to stop before leaving the operating position.
3. Release the latches (3) on the air cleaner and pull the air-cleaner cover off the air-cleaner body.
4. Clean the inside of the air-cleaner cover (4) with compressed air.
5. Gently slide the primary filter (2) out of the air-cleaner body (1).

   Note: Avoid knocking the filter into the side of the body.
6. Remove the safety filter (5) only to replace it.

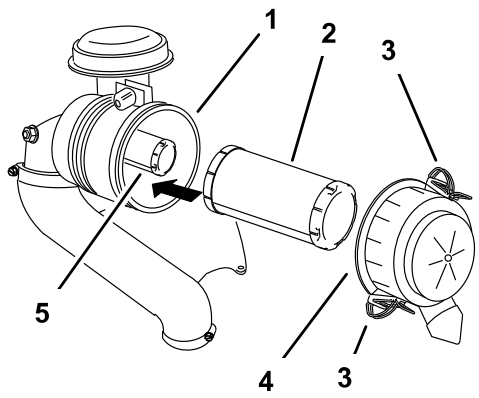

g001883S

Inspecting the Filters

1. Inspect the safety filter. If it is dirty, replace both the safety and primary filters.

Air Cleaner Service (continued)

IMPORTANT

Do not attempt to clean the safety filter. If the safety filter is dirty, then the primary filter is damaged.

2. Inspect the primary filter for damage by looking into the filter while shining a bright light on the outside of the filter. If the primary filter is dirty, bent, or damaged, replace it.

   Note: Holes in the filter appear as bright spots. Do not clean the primary filter.

Installing the Filters

IMPORTANT

To prevent engine damage, always operate the engine with both air filters and the cover installed.

1. If you are installing new filters, check each filter for shipping damage.

   Note: Do not use a damaged filter.
2. If you are replacing the inner filter, carefully slide it into the filter body.
3. Carefully slide the primary filter over the safety filter.

   Note: Ensure that the primary filter is fully seated by pushing on the outer rim while installing it.

IMPORTANT

Do not press on the soft, inside area of the filter.

4. Install the air-cleaner cover and secure the latches.

Engine-Oil Service

Engine-Oil Specifications

Oil Type	Detergent oil (API service SF, SG, SH, SJ, or SL)
Crankcase Capacity	1.7 L (57.5 fl oz) with filter; 1.9 L (64. 2 fl oz) without filter

Engine-Oil Service (continued)

Viscosity	See the table below

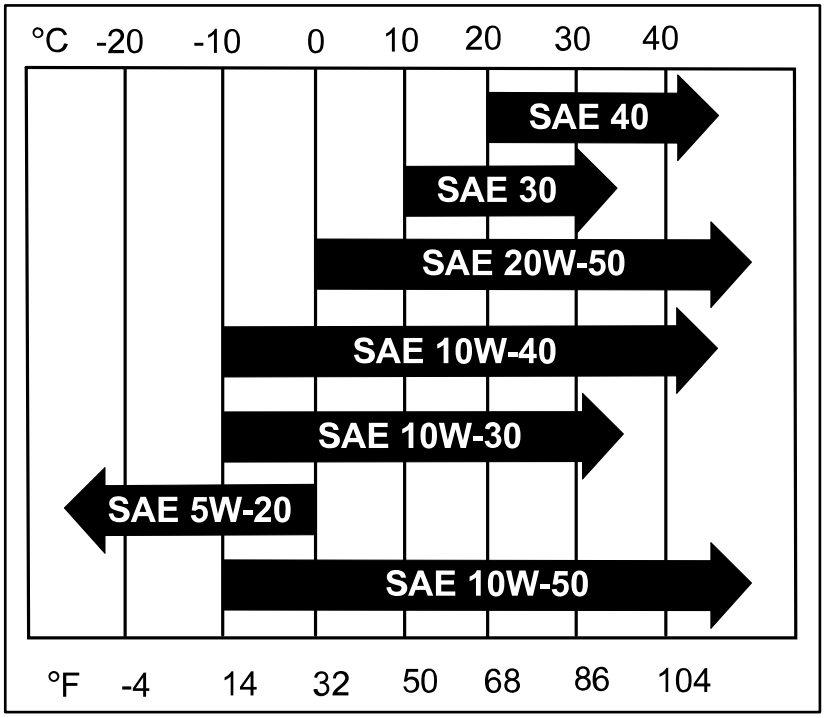

Note: Although 10W-40 engine oil is recommended for most conditions, you may need to change oil viscosity to accommodate atmospheric conditions. Using 20W-50 engine oil in higher ambient temperatures can reduce oil consumption.

Checking the Engine-Oil Level

1. Park the machine on a level surface, disengage the PTO, and engage the parking brake.
2. Shut off the engine, remove the key, and wait for all moving parts to stop before leaving the operating position.
3. Wait for the engine to cool so that the oil has had time to drain into the sump.
4. To keep dirt, grass clippings, etc., out of the engine, clean the area around the oil-fill cap and dipstick before removing it.
5. Check the engine-oil level as shown.

Engine-Oil Service (continued)

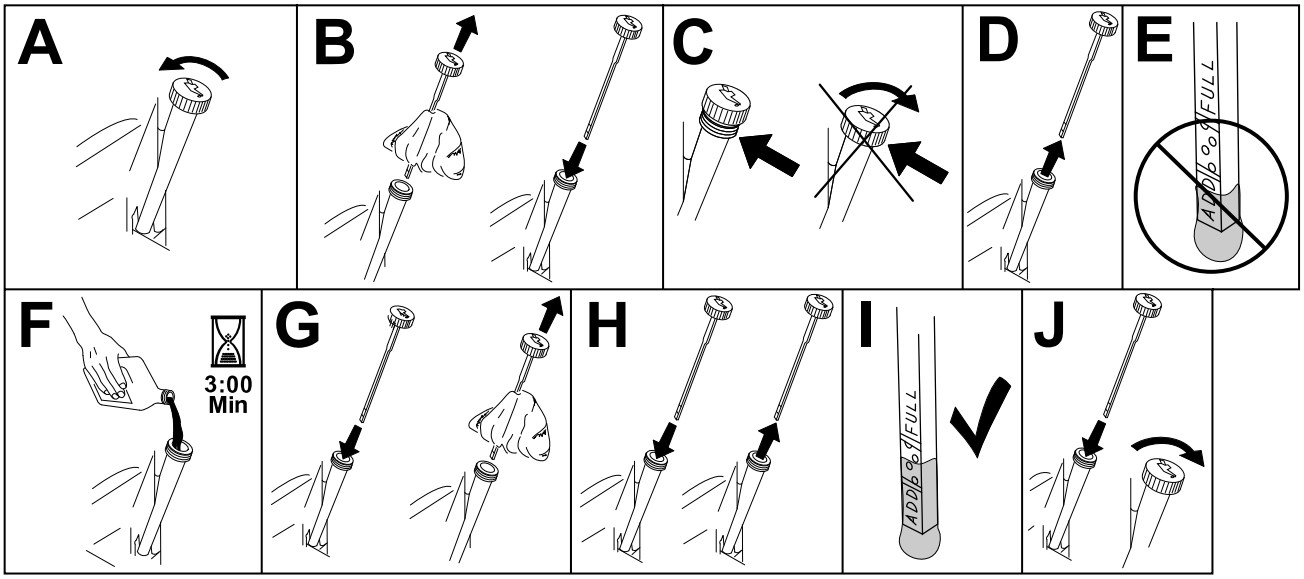

G599021

IMPORTANT

If you overfill or underfill the engine crankcase with oil and run the engine, you may damage the engine.

Changing the Engine Oil

Note: Dispose of the used oil at a recycling center.

1. Start the engine and let it run for 5 minutes.

   Note: This warms the oil so that it drains better.
2. Park the machine on a level surface, disengage the PTO, and engage the parking brake.
3. Shut off the engine, remove the key, and wait for all moving parts to stop before leaving the operating position.
4. Place a drain pan under the oil drain plug.
5. Loosen the oil drain plug.

Engine-Oil Service (continued)

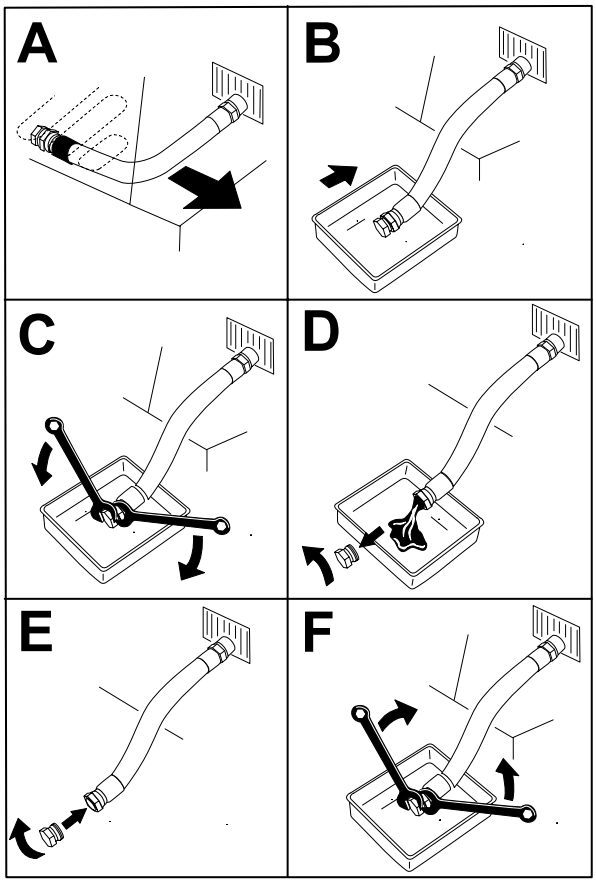

g027734S

6. Drain the oil from the engine.
7. Install the oil drain plug.
8. Slowly pour approximately 80% of the specified oil into the filler tube and slowly add the additional oil to bring it to the Full mark.

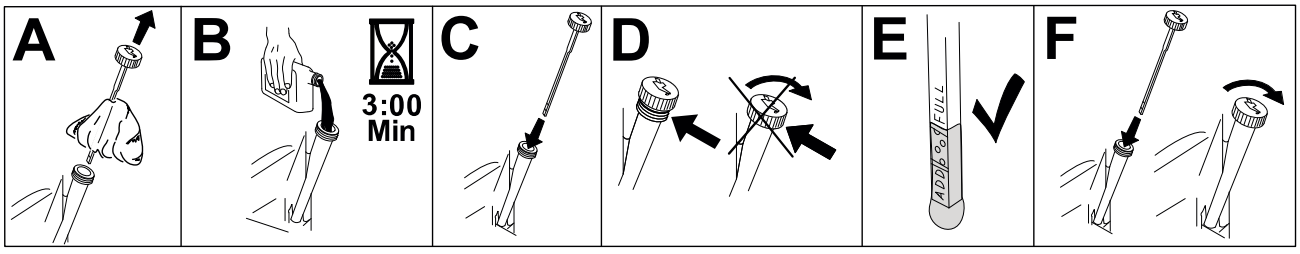

G594022

9. Start the engine and let it run for a few seconds.
10. Shut off the engine and check the oil level again.

Changing the Engine-Oil Filter

1. Drain the oil from the engine.
2. Change the engine-oil filter.

Engine-Oil Service (continued)

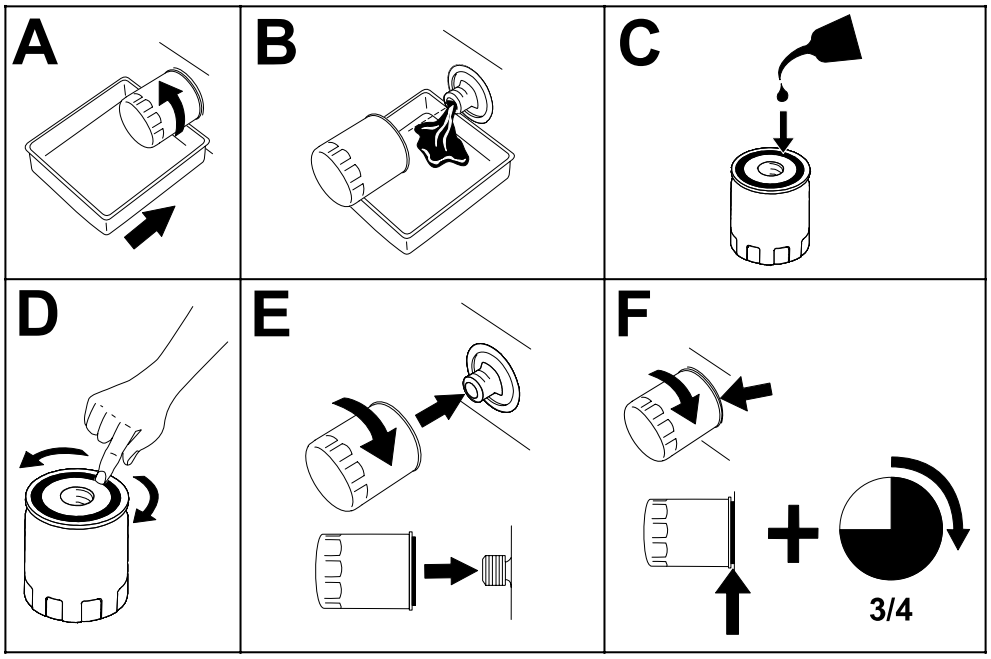

g027477s

Note: Ensure that the oil-filter gasket touches the engine, and then turn the oil filter an extra 3/4 turn.

3. Fill the crankcase with the proper type of new oil.

Servicing the Spark Plug

Ensure that the air gap between the center and side electrodes is correct before installing the spark plug. Use a spark plug wrench for removing and installing the spark plug and a gapping tool or feeler gauge to check and adjust the air gap. Install a new spark plug if necessary.

Type: NGK® BPR5ES

Air gap: 0.76 mm (0.03 inch)

Removing the Spark Plug

1. Park the machine on a level surface, disengage the PTO, and engage the parking brake.
2. Shut off the engine, remove the key, and wait for all moving parts to stop before leaving the operating position.
3. Clean the area around the base of the plug to keep dirt and debris out of the engine.
4. Remove the spark plug.

Servicing the Spark Plug (continued)

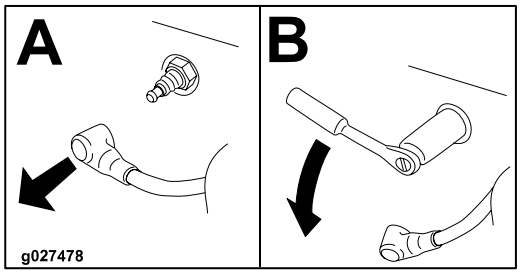

G437139

Checking the Spark Plug

IMPORTANT

Do not clean the spark plug(s). Always replace the spark plug(s) when it has a black coating, worn electrodes, an oily film, or cracks.

If you see light brown or gray on the insulator, the engine is operating properly. A black coating on the insulator usually means the air cleaner is dirty.

Set the gap to 0.76 mm (0.03 inch).

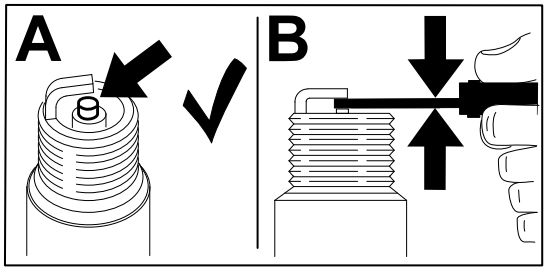

G437150

Installing the Spark Plug

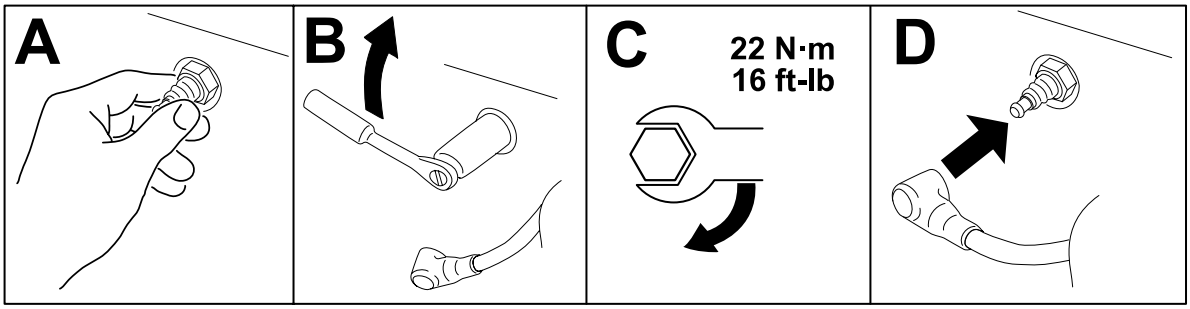

G560324

Checking the Spark Arrester

For Machines with a Spark Arrester

⚠ WARNING ⚠

Hot exhaust system components may ignite gasoline vapors even after the engine is stopped. Hot particles exhausted during engine operation may ignite flammable materials. Fire may result in personal injury or property damage.

Do not refuel or run engine unless spark arrester is installed.

1. Park the machine on a level surface, disengage the PTO, and engage the parking brake.
2. Shut off the engine, remove the key, and wait for all moving parts to stop before leaving the operating position.
3. Wait for muffler to cool.
4. If you see any breaks in the screen or welds, replace the arrester.
5. If the screen is plugged, remove the arrester, shake loose particles out of the arrester, and clean the screen with a wire brush (soak the screen in solvent if necessary).
6. Install the arrester on the exhaust outlet.

Fuel Maintenance

⚠ DANGER ⚠

In certain conditions, fuel is extremely flammable and highly explosive. A fire or explosion from fuel can burn you and others and can damage property.

Replacing the Fuel Filter

1. Park the machine on a level surface, disengage the PTO, and engage the parking brake.
2. Shut off the engine, remove the key, and wait for all moving parts to stop before leaving the operating position.
3. Clamp the fuel lines on both sides of the fuel filter.
4. Replace the filter.

   Note: Ensure that the flow-direction arrow on the replacement filter points toward the engine.

IMPORTANT

Never install a dirty filter after removing it from the fuel line.

Replacing the Fuel Filter (continued)

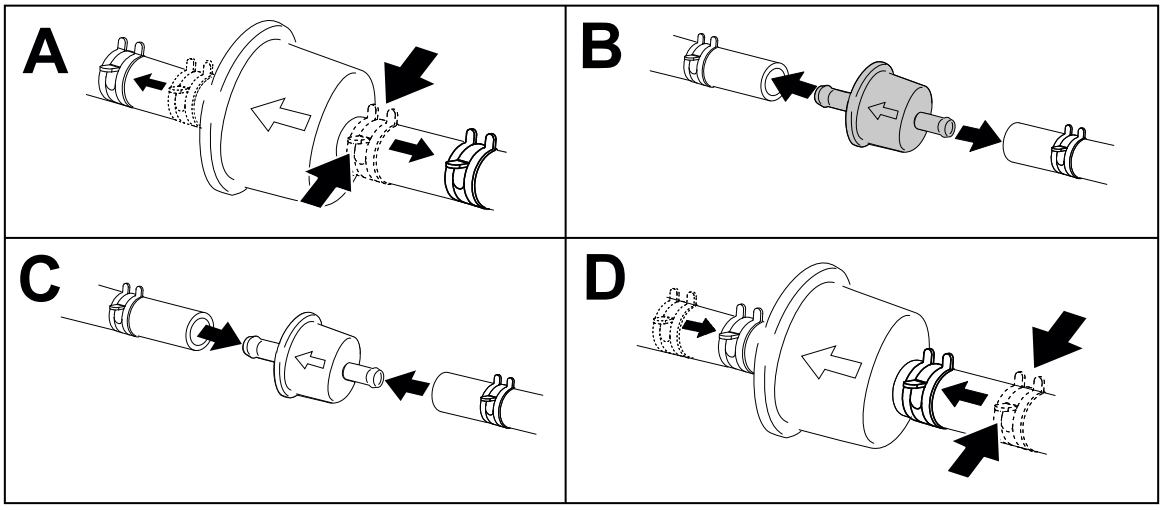

G420323

5. Remove the clamps blocking the fuel flow.

Electrical System Maintenance

Electrical System Safety

- Disconnect the cable from the negative terminal of the battery before repairing the machine.
- Charge the battery in an open, well-ventilated area, away from sparks and flames. Unplug the charger before connecting or disconnecting the battery. Wear protective clothing and use insulated tools.

Battery Service

Removing the Battery

⚠ WARNING ⚠

Battery terminals or metal tools could short against metal machine components, causing sparks. Sparks can cause the battery gasses to explode, resulting in personal injury.

- **When removing or installing the battery, do not allow the battery terminals to touch any metal parts of the machine.**
- **Do not allow metal tools to short between the battery terminals and metal parts of the machine.**

Battery Service (continued)

⚠ WARNING ⚠

Incorrectly removing the cables from battery could damage the machine and cables, causing sparks. Sparks can cause the battery gasses to explode, resulting in personal injury.

- **Always disconnect the negative (black) battery cable before disconnecting the positive (red) cable.**
- **Always connect the positive (red) battery cable before connecting the negative (black) cable.**

---

1. Park the machine on a level surface, disengage the PTO, and engage the parking brake.
2. Shut off the engine, remove the key, and wait for all moving parts to stop before leaving the operating position.
3. Remove the battery as shown in the following figure.

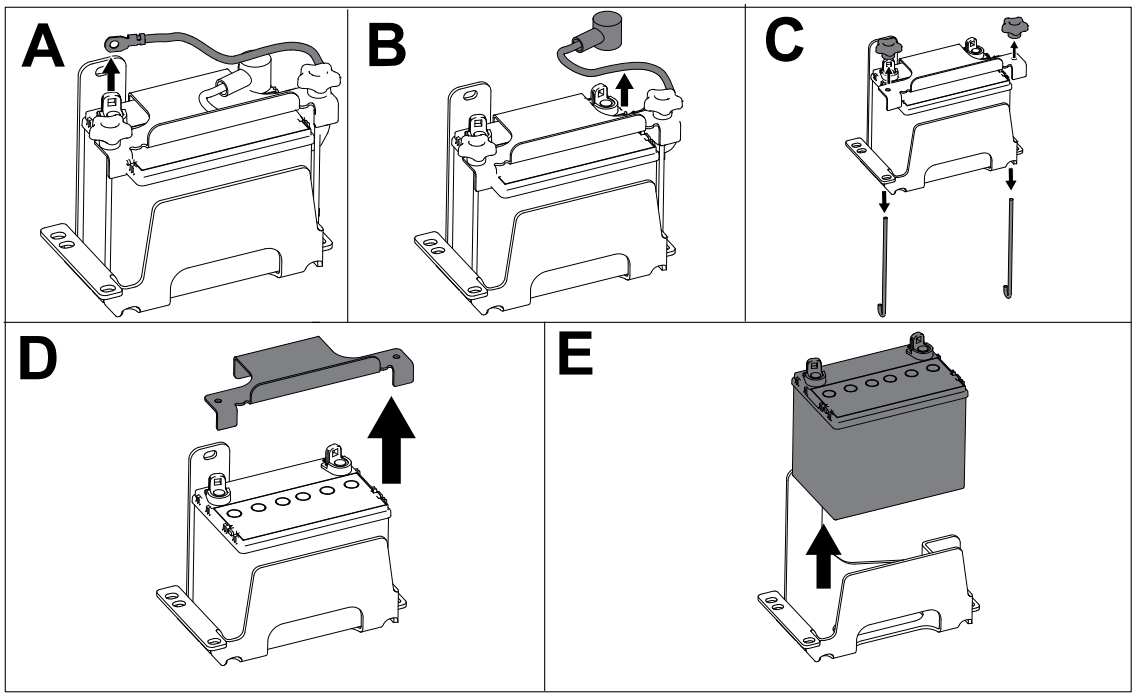

G618256

Charging the Battery

⚠ WARNING ⚠

Charging the battery produces gasses that can explode.

Never smoke near the battery and keep sparks and flames away from battery.

Battery Service (continued)

IMPORTANT

Always keep the battery fully charged. This is especially important to prevent battery damage when the temperature is below 0°C (32°F).

1. Remove the battery from the machine.
2. Charge the battery per the battery charger manufacturer's instructions.

IMPORTANT

Do not overcharge the battery; otherwise, you could damage it.

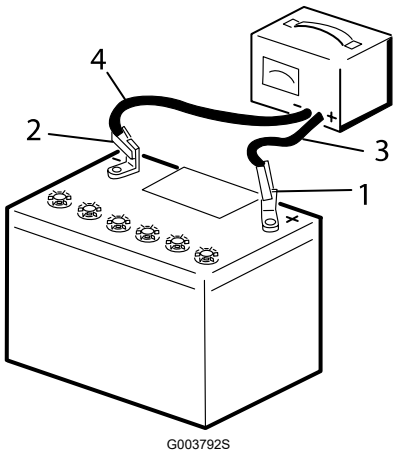

1. Positive battery post
2. Negative battery post
3. Red (+) charger lead
4. Black (-) charger lead

3. When the battery is fully charged, unplug the charger from the electrical outlet (if applicable), then disconnect the charger leads from the battery posts.

Installing the Battery

Install the battery as shown in the following figure.

Battery Service (continued)

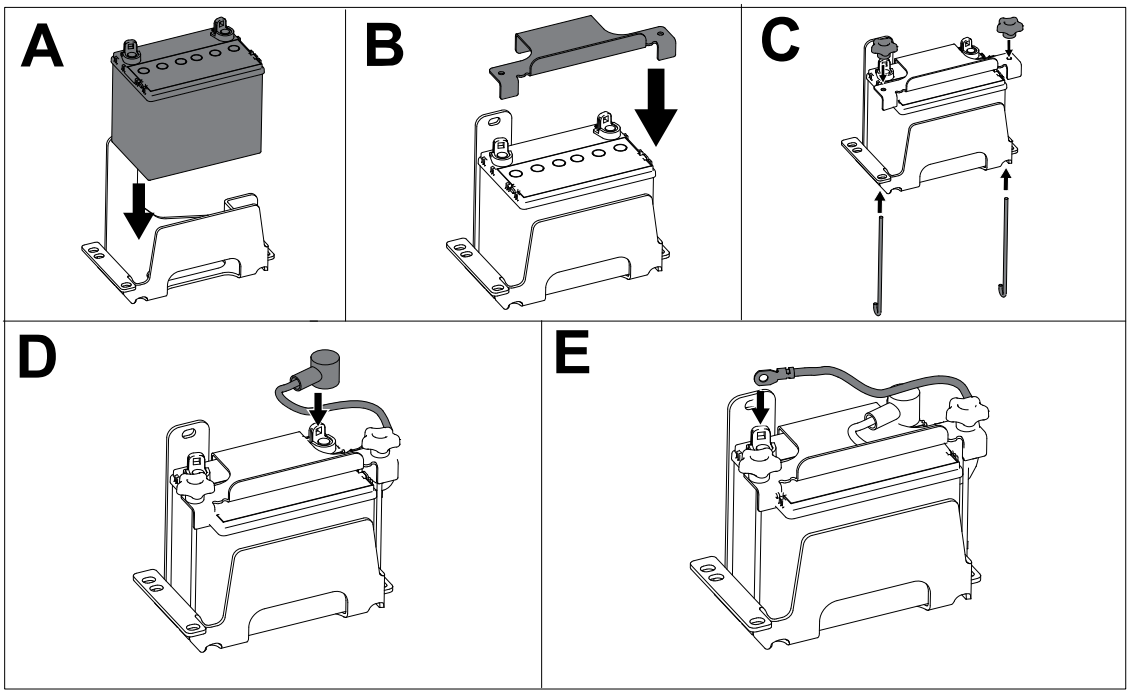

G618257

Jump-Starting the Machine

⚠ WARNING ⚠

Jump-starting the battery can produce gasses that can explode.

Do not smoke near the battery, and keep sparks and flames away from battery.

⚠ DANGER ⚠

Jump-starting a weak battery that is cracked or frozen or has a low electrolyte level or an open/shorted battery cell can cause an explosion, resulting in serious personal injury.

Do not jump-start a weak battery if these conditions exist.

---

1. Check and clean corrosion from the battery terminals before jump-starting. Ensure that the connections are tight.

⚠ CAUTION ⚠

Corrosion or loose connections can cause unwanted electrical voltage spikes at any time during the jump-starting procedure.

Do not attempt to jump-start the machine with loose or corroded battery terminals, or damage to the engine may occur.

Jump-Starting the Machine (continued)

2. Make sure that the booster battery is a good and fully charged lead-acid battery at 12.6 V or greater.

   Note: Use properly sized jumper cables with short lengths to reduce voltage drop between systems. Make sure that the cables are color coded or labeled for the correct polarity.

⚠ WARNING ⚠

Batteries contain acid and produce explosive gases.

- **Shield your eyes and face from the batteries at all times.**
- **Do not lean over the batteries.**

Note: Ensure that the vent caps are tight and level. Place a damp cloth, if available, over any vent caps on both batteries. Also ensure that the machines do not touch and that both electrical systems are off and at the same rated system voltage. These instructions are for negative ground systems only.

3. Connect the positive (+) cable to the positive (+) terminal of the discharged battery that is wired to the starter or solenoid as shown:

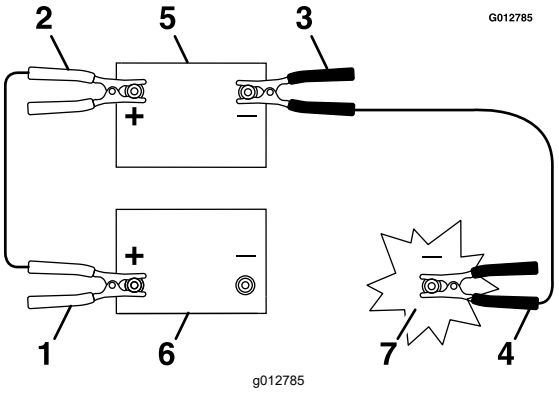

(1) Positive (+) cable on discharged battery

(2) Positive (+) cable on booster battery

(3) Negative (–) cable on the booster battery

(4) Negative (–) cable on the engine block

(5) Booster battery

(6) Discharged battery

(7) Engine block

4. Connect the other end of the positive (+) jumper cable to the positive terminal of the battery in the other machine.
5. Connect an end of the negative (-) jumper cable to the negative post of the battery in the other machine.
6. Connect the other end of the negative (-) jumper cable to a ground point, such as an unpainted bolt or chassis member.
7. Start the engine in the other machine. Let it run a few minutes, then start your engine.
8. Remove the cables in the reverse order of connection.
9. Install the cover to the jump post.

Drive System Maintenance

Tire Pressure

Maintain the air pressure in the rear tires at 83 to 97 kPa (12 to 14 psi).

IMPORTANT

Uneven tire pressure can cause an uneven cut.

Note: The front tires are semi-pneumatic tires and do not require air-pressure maintenance.

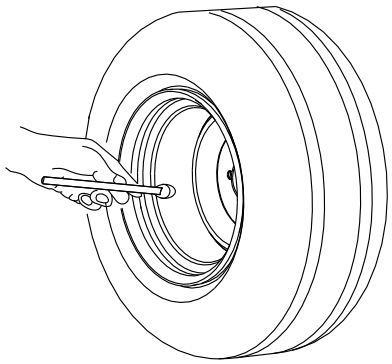

G484084

Adjusting the Caster-Pivot Bearing

1. Park the machine on a level surface, disengage the PTO, and engage the parking brake.
2. Shut off the machine, remove the key, and wait for all moving parts to stop before leaving the operating position.
3. Remove the dust cap from the caster.
4. Tighten the locknut until the spring washers are flat, and then back off a 1/4 turn to properly set the preload on the bearings.

IMPORTANT

Make sure that the spring washers are installed correctly as shown.

5. Install the dust cap.

Adjusting the Caster-Pivot Bearing (continued)

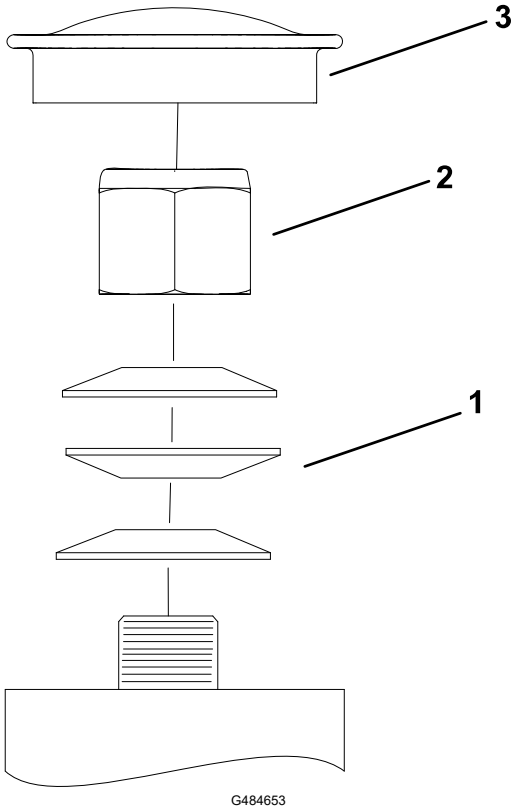

1. Spring washer
2. Locknut
3. Dust cap

Checking the Wheel-Lug Nuts

Check and torque the wheel-lug nuts to **115 to 142 N·m (85 to 105 ft-lb)**.

Note: Do not use anti-seize compound on the wheel hub.

Hydraulic System Maintenance

Hydraulic System Safety

- Seek immediate medical attention if hydraulic fluid is injected into the skin. Injected fluid must be surgically removed within a few hours by a doctor familiar with this form of injury; otherwise, gangrene may result.
- Ensure that all hydraulic-fluid hoses and lines are in good condition and all hydraulic connections and fittings are tight before applying pressure to the hydraulic system.
- Keep your body and hands away from pinhole leaks or nozzles that eject high-pressure hydraulic fluid.
- Use cardboard or paper, not your hands, to find hydraulic leaks.
- Safely relieve all pressure in the hydraulic system before performing any work on the hydraulic system.

Hydraulic-Fluid Specifications

Hydraulic Fluid Type: Exmark Premium Hydro Oil (preferred) or Mobil 1™ 15W50

Hydraulic System Capacity: 6.4 L (216.4 US fl oz)

IMPORTANT

Use the specified fluid. Other fluids could damage the system.

Checking the Hydraulic Fluid

1. Park the machine on a level surface, disengage the PTO, and engage the parking brake.
2. Shut off the engine, remove the key, and wait for all moving parts to stop before leaving the operating position.
3. Remove the rear cushion.
4. Clean the area around the hydraulic reservoir cap and remove the cap.

IMPORTANT

Do not allow dirt to enter the hydraulic system, or contamination may occur.

5. The fluid level should indicated on the hydraulic-oil dipstick.

   The dipstick has a cross-hatched pattern for hot oil levels. The fluid level varies with the temperature of the fluid. The upper end of the cross-hatched pattern shows the level of fluid when it is at 107°C (225°F). The lower edge of the cross-hatch shows the level of the fluid when it is at 24°C (75°F). Fill to the appropriate level depending upon the temperature of the fluid. For example: If the fluid is about 65°C (150°F), fill to the center

Checking the Hydraulic Fluid (continued)

of the cross-hatch pattern. If the fluid is at room temperature (about 24°C (75°F)), fill only to the bottom of the cross-hatch pattern.

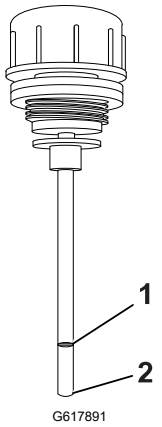

1 Full

2 Add hydraulic fluid

6. If the fluid level is below the cross-hatch pattern, add the specified hydraulic fluid.

   Note: Do not overfill the reservoir.

7. Install the hydraulic reservoir cap.

   Note: Do not overtighten the cap.

8. Install the rear cushion.

Replacing the Hydraulic Fluid and Filters

IMPORTANT

Do not change the hydraulic fluid without changing the filter unless the fluid has been contaminated or been extremely hot. Otherwise, you could contaminate the system and damage it.

Change the hydraulic fluid more frequently in severe conditions or in a hot operating climate. Contact your Authorized Service Dealer for a hydraulic kit to replace the hydraulic filters.

⚠ WARNING ⚠

Hot hydraulic fluid can cause severe burns.

Allow the hydraulic fluid to cool before performing any maintenance on the hydraulic system.

1. Park the machine on a level surface, disengage the PTO, and engage the parking brake.

Replacing the Hydraulic Fluid and Filters (continued)

2. Shut off the engine, remove the key, and wait for all moving parts to stop before leaving the operating position.
3. Allow the machine to cool.

IMPORTANT

Only change the hydraulic fluid when the system is cool (less than 38°C or 100°F). Changing the fluid when the system is warm could result in overfilling the transaxle and damage the breather assembly.

4. Remove the rear guard and thigh pad.
5. Raise the rear of machine up and support with jack stands (or equivalent support) just high enough to allow drive wheels to turn freely.

⚠ CAUTION ⚠

Raising the mower for service or maintenance relying solely on mechanical or hydraulic jacks could be dangerous. The mechanical or hydraulic jacks may not be enough support or may malfunction allowing the unit to fall, which could cause injury.

Do not rely solely on mechanical or hydraulic jacks for support. Use adequate jack stands or equivalent support.

6. Remove the left and right drive tires.
7. Carefully clean the area around the filter.

IMPORTANT

Do not allow dirt to enter the hydraulic system, or contamination may occur.

8. Place a drain pan under the hydraulic filter (2), right-wheel motor plug (1), and the left-wheel motor plug (1).
9. Remove the filter and allow the hydraulic fluid to drain from the reservoir.
10. Remove the lowest plugs on the right and left wheel motors, allow the fluid to drain. Clean the plugs and reinstall them.
11. Fill the new hydraulic filter with the specified hydraulic fluid and apply a thin coat of fluid on the surface of the rubber seal.

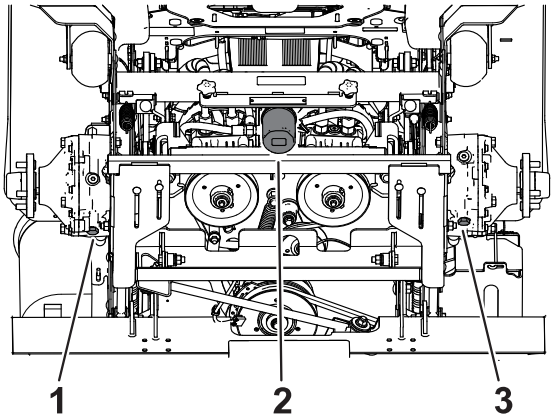

G617682

Replacing the Hydraulic Fluid and Filters (continued)

12. Install the new filter by turning filter clockwise until rubber seal contacts the filter adapter, then tighten the filter an additional 2/3 to 3/4 turn.
13. Remove the fill-port plugs located on each wheel motor.

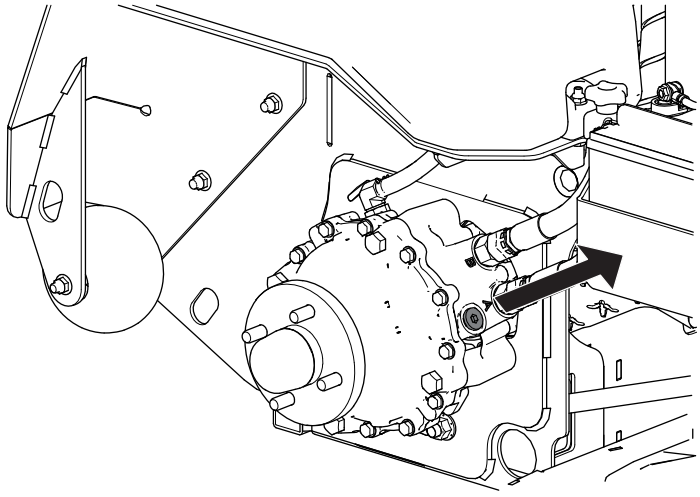

G617683

14. Fill each motor with the specified hydraulic fluid; refer to the volumes listed below.
    - Right wheel motor: 0.95 L (29 fl oz)
    - Left wheel motor: 1.24 L (42 fl oz)

15. Install the plug and torque it to **62 to 68 N·m (46 to 50 ft-lb)**.
16. Fill the hydraulic reservoir with the specified hydraulic fluid.
17. Bleed the hydraulic system.
18. Install the left and right drive tires.
19. Remove the jack stands
20. Install the cushion and rear guard.

Bleeding the Hydraulic System

1. Park the machine on a level surface, disengage the PTO, and engage the parking brake.
2. Shut off the engine, remove the key, and wait for all moving parts to stop before leaving the operating position.
3. Raise the rear of the machine onto jack stands high enough to raise the drive wheels off the ground.

Bleeding the Hydraulic System (continued)

⚠ CAUTION ⚠

Raising the mower for service or maintenance relying solely on mechanical or hydraulic jacks could be dangerous. The mechanical or hydraulic jacks may not be enough support or may malfunction allowing the unit to fall, which could cause injury.

Do not rely solely on mechanical or hydraulic jacks for support. Use adequate jack stands or equivalent support.

---

4. Check the hydraulic fluid level and add fluid as needed.
5. Start engine, move the throttle control ahead to the full throttle position, and disengage the parking brake.
6. Open the bypass valves (2) on the charge pump (1).
7. With the engine running, slowly move the motion-control levers both forward and rearward 5 or 6 times.
8. Close the bypass valves (2) on the charge pump (1).
9. With the engine running, slowly move the motion-control levers both forward and rearward 5 or 6 times.
10. Shut off the engine and remove the key.
11. Check the hydraulic-fluid level and add fluid as needed.
12. Repeat the procedure as needed until the air is completely purged from the system.
13. Remove the jack stands.

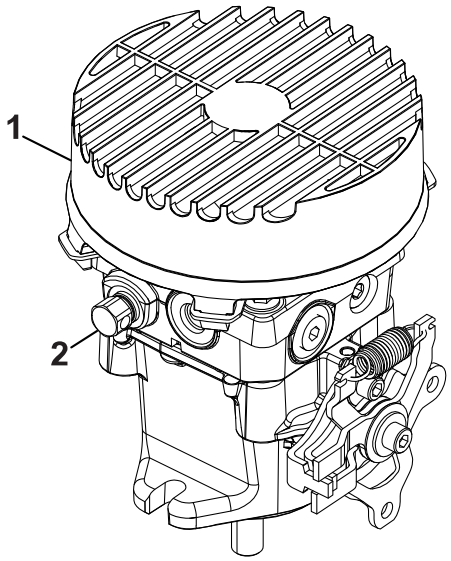

G616929

Controls Maintenance

Adjusting Motion-Control Tracking

Note: The motion control lever needs to be in neutral while making any necessary adjustments.

If the machine travels or pulls to one side when the motion control levers are in the full forward position, adjust the control links.

1. Lower the thigh pad.
2. Adjust the control link.
   - Shorten the link to increase the speed
   - Lengthen the link to decrease the speed.

Adjusting Motion-Control Tracking (continued)

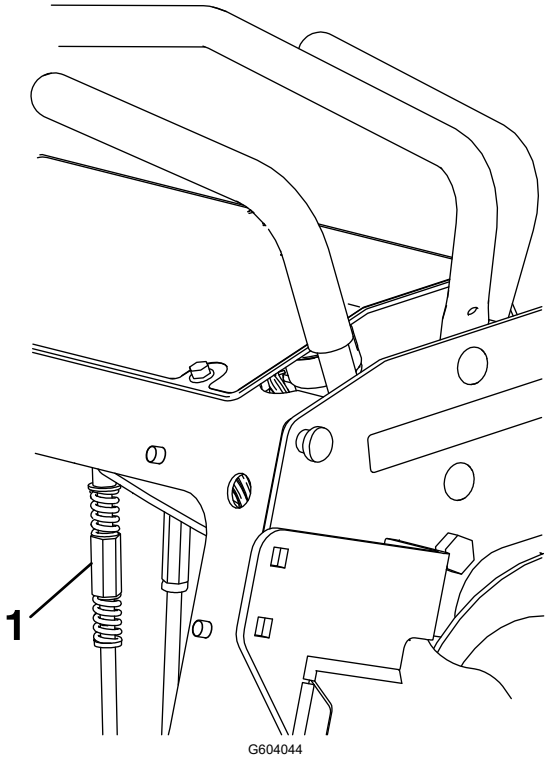

(1) Link

3. Secure the thigh pad.
4. Drive the machine and check the full forward tracking.
5. Repeat the steps above until the desired tracking is obtained.

Adjusting the Motion-Control Lever Resistance

1. Remove the rear cushion.
2. Adjust the motion-control link to obtain the desired motion-control lever resistance; refer to the following information.
   - Maximum force (factory setting): the maximum speed forward and reverse.

Adjusting the Motion-Control Lever Resistance (continued)

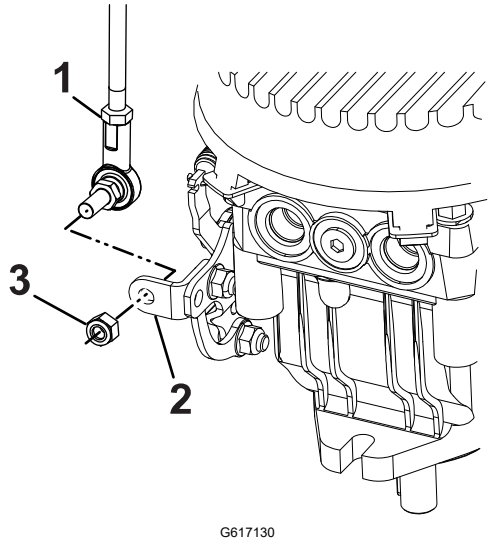

G617130

(1) Motion-control link
(2) Pump-control bracket
(3) Nut

- Medium force: reduced speed forward and reverse.

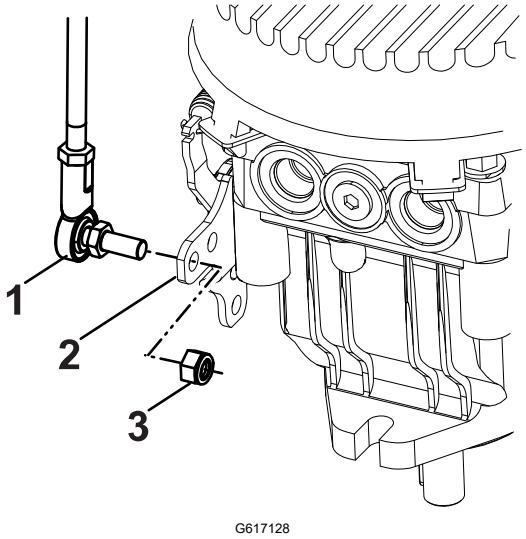

G617128

(1) Motion-control link
(2) Pump-control bracket
(3) Nut

- Minimum force: slowest speed forward and reverse.

Adjusting the Motion-Control Lever Resistance (continued)

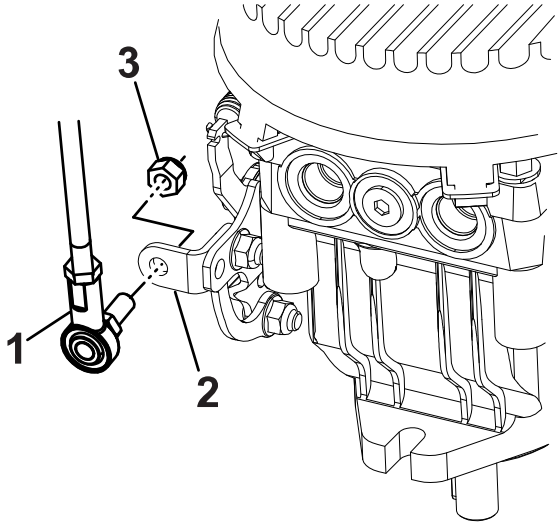

G617129

(1) Motion-control link
(2) Pump-control bracket
(3) Nut

Adjusting the Motion-Control Levers to Neutral Lock

There is a plate under the control panel that engages notches in the motion controls when the brake is applied in neutral. If the parking brake plate tabs do not engage these notches, adjust the front control links.

1. Slowly apply the brake while observing the tabs of the brake plate engaging the notches in the motion controls. The lock plate should drop easily and freely into the notches on each side.
2. Remove the rear cushion.
3. Check that controls are in neutral. Adjust each side via the front control link.
4. Loosen the upper and lower jam nuts (2) at the top of the front control link (1).
   - Lengthen the link (1) to move the control rearward.
   - Shorten the link (1) to move the control forward.
5. Partially cycle the brake on and off to observe the plate movement in and out of the notch.
6. Tighten the jam nuts.
7. Install the rear cushion.
8. Check the full forward tracking.

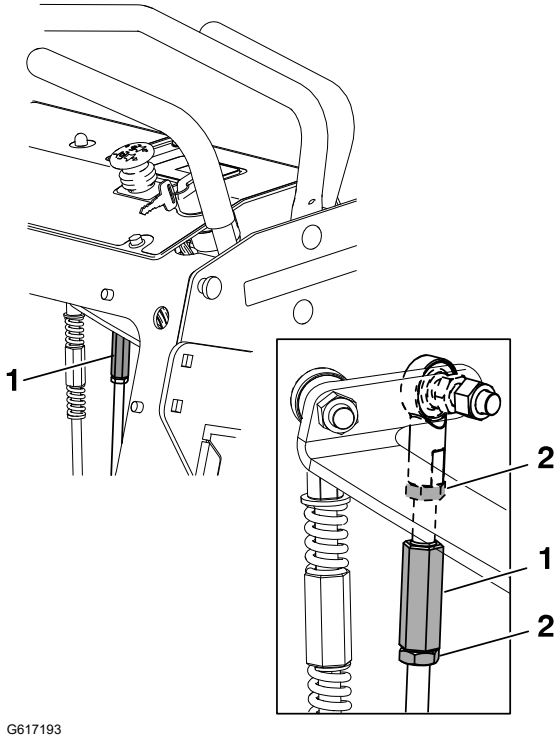

G617193

Belt Maintenance

Checking the Belts

1. Park the machine on a level surface, disengage the PTO, and engage the parking brake.
2. Shut off the engine, remove the key, and wait for all moving parts to stop before leaving the operating position.
3. Look on the top side of the cutting deck to check the mower blade drive belt condition.
4. Look under the engine deck to check the pump drive belt condition.
5. Check all idler arms to ensure they pivot freely.

Mower-Deck Maintenance

Blade Service

To ensure a superior quality of cut, keep the blades sharp. For convenient sharpening and replacement, keep extra blades on hand.

Replace the blades if they hit a solid object, or if the blade is out of balance or bent.

Blade Safety

- Inspect the blades periodically for wear or damage.
- Use care when checking the blades. Wrap the blade(s) or wear gloves and use caution when servicing them. Only replace damaged blades; never straighten or weld them.
- On multi-bladed machines, take care as rotating one blade can cause other blades to rotate.
- Replace worn or damaged blades and bolts in sets to preserve balance.

Inspecting the Blades

1. Inspect the cutting edges (1).
2. If the edges are not sharp or have nicks, remove and sharpen the blade.
3. Inspect the blades, especially in the curved area (2).
4. If you notice any cracks (4), wear, or a slot forming (3) in this area, immediately install a new blade.

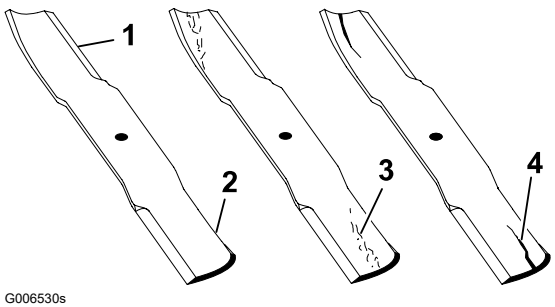

G006530s

Checking for Bent Blades

The machine must be on a level surface for this procedure.

Blade Service (continued)

1. Raise the mower deck to the highest height-of-cut position.
2. While wearing thickly padded gloves, or other adequate hand protection, slowly rotate the blade into a position that allows you to measure the distance between the cutting edge and the level surface.

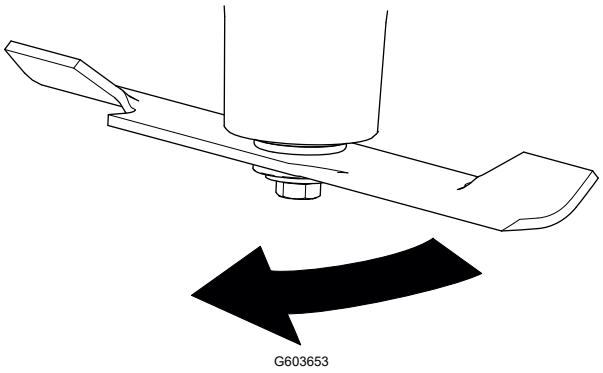

3. Measure from the tip of the blade to the level surface.

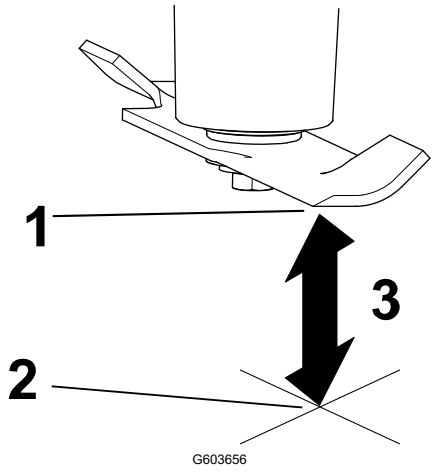

(1) Blade (in position for measuring)

(2) Level surface

(3) Measured distance between blade and the surface (A)

4. Rotate the same blade 180 degrees so that the opposite blade edge is now in the same position.

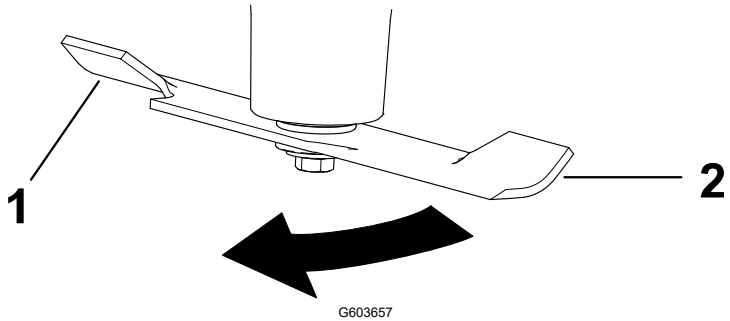

(1) Blade edge previous measured

(2) Opposite blade edge

5. Measure from the tip of the blade to the level surface.

Blade Service (continued)

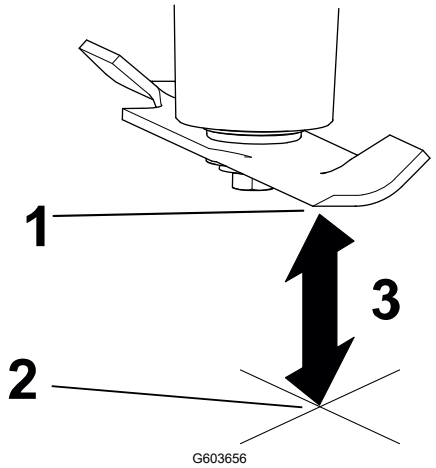

(1) Blade (in position for measuring)

(2) Level surface

(3) Measured distance between blade and the surface (B)

6. If the difference between A and B is greater than 3 mm (1/8 inch), replace the blade.

   Note: If you replace the blade and the difference continues to exceed 3 mm (1/8 inch), the blade spindle could be bent. Contact an Authorized Service Dealer for service.

7. Repeat this procedure each blade.

Removing the Blades

1. Hold the blade end using a rag or thickly padded glove.
2. Remove the blade as shown.

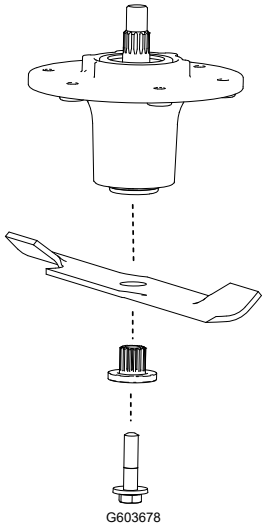

Sharpening the Blades

1. Use a file to sharpen the cutting edge at both ends of the blade. Ensure to maintain the original angle (1).

   Note: Remove the same amount of material from both cutting edges so that the blade retains its balance.

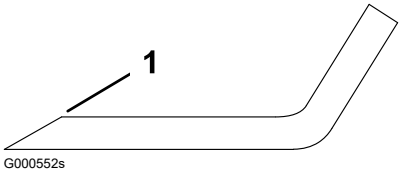

Blade Service (continued)

2. Check the balance of the blade ① by putting it on a blade balancer ②.

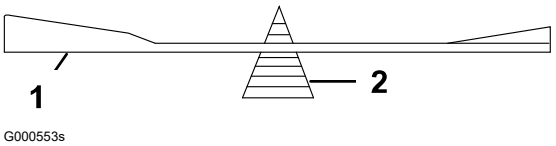

G000553s

Note: If the blade stays in a horizontal position, the blade is balanced and can be used.

If the blade is not balanced, file some metal off the end of the sail area only.

3. Repeat this procedure until the blade is balanced.

Installing the Blades

⚠ WARNING ⚠

Operating a machine after incorrectly installing the blade assembly and/or not using genuine Exmark blade and blade hardware could allow a blade or blade component to be thrown out from under the deck, resulting in serious injury or death.

Always install genuine Exmark blades and blade hardware according to the instructions.

---

1. Install the blade as shown.

Note: The curved part of the blade must be pointing upward toward the inside of the mower to ensure proper cutting.

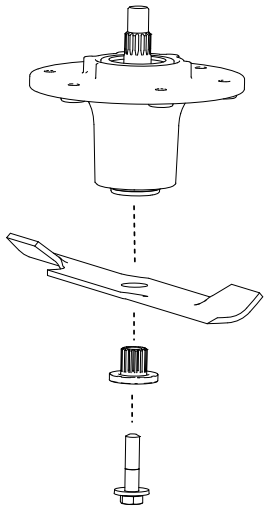
G603678

2. Torque the blade bolt to **67.8 to 81.4 N·m (50 to 60 ft-lb)**.

Leveling the Mower Deck

Ensure that the mower deck is level any time you install the mower deck or when you see an uneven cut on your lawn.

Note: Your mower deck may differ from the version shown in the following procedures.

Preparing to Level the Mower Deck

1. Park the machine on a level surface, disengage the PTO, and engage the parking brake.

Leveling the Mower Deck (continued)

2. Shut off the engine, remove the key, and wait for all moving parts to stop before leaving the operating position.
3. Ensure that the tires are inflated to the correct specifications and the caster wheels are facing straight forward.
4. Check the mower deck for bent blades; remove and replace any bent blades.
5. Pull the deck lift handle all the way rearward to latch the cutting deck into the raised transport position.
6. Insert the height adjustment pin into the 10.2 cm (4 inches) cutting height location.
7. Release the transport lock and allow the deck to lower to the cutting height.
8. Raise the discharge deflector.

Checking the Mower-Deck Level

1. Position the blades front-to-rear.
2. Measure from the level surface to the front tip of the center blade. The measurement should read 10.2 cm (4 inches).

   Note: In most conditions, the back tips on the side blades should be adjusted 3.2 to 6.4 mm (1/8 to 1/4 inch) higher than the front.

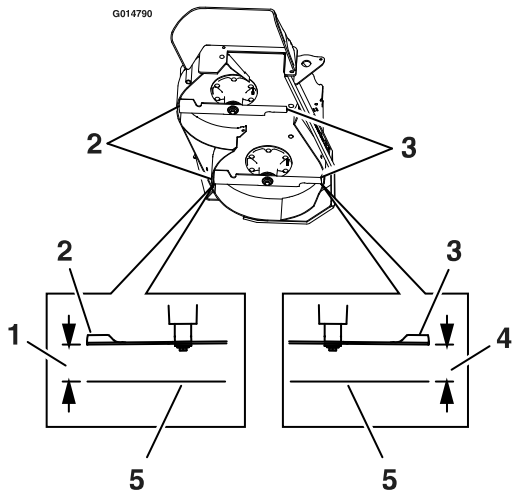

g014790S

(1) 10.5 to 10.8 cm (4-1/8 to 4-1/4 inches)
(2) Back blade tip
(3) Front blade tip
(4) 10.2 cm (4 inches)
(5) Level surface

3. If the measurement is not correct, level the mower deck.

Leveling the Mower Deck (continued)

Leveling the Mower Deck

1. Raise the deck to transport position.
2. Place 4 blocks under the deck. Refer to the measurements below.

   Place the appropriate block directly in front of the blade.

   - Right-front block thickness: 9.25 cm (3.64 inches)
   - Left-front block thickness: 9 cm (3.58 inches)

   Place the appropriate block directly behind the blade.

   - Right-rear block thickness: 9.83 cm (3.87 inches)
   - Left-rear block thickness: 9.58 cm (3.77 inches)
3. Set the height of the cut lever to the 10.2 cm (4 inches) position.
4. Loosen the lower fasteners securing the brackets to all 4 corners of the deck and ensure that the mower deck sits securely on all 4 blocks.

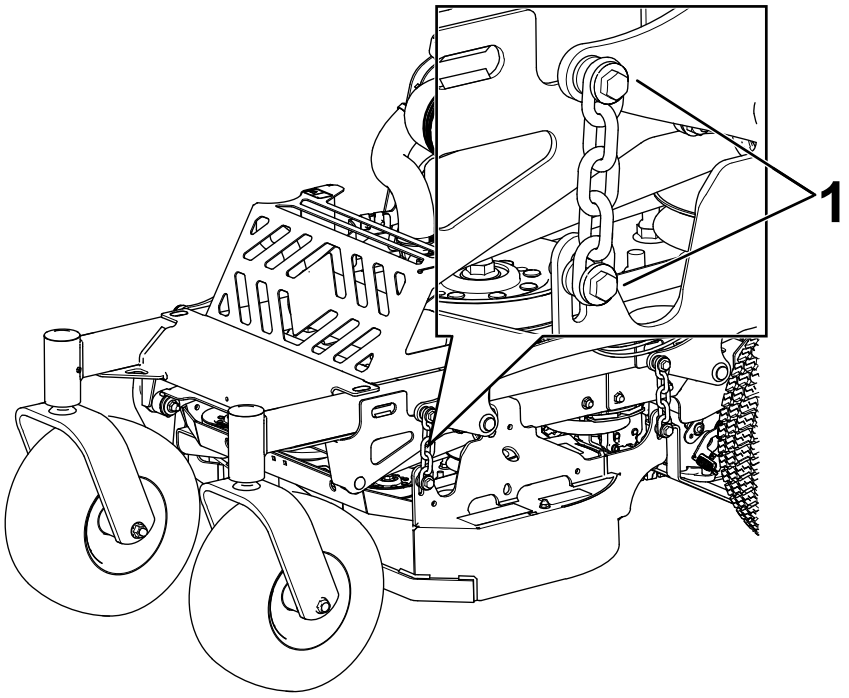

G604108

(1) Deck fasteners

5. Remove any slack from the lift chains and ensure that the lift lever is resting against the height adjustment pin.
6. Tighten the fasteners.
7. Raise the deck and remove the blocks. Lower the deck back to 10.2 cm (4 inches) and recheck the cutting height.

Replacing the Grass Deflector

⚠ DANGER ⚠

An uncovered discharge opening allows objects to be thrown toward you or bystanders. Also, contact with the blade could occur. Thrown objects or blade contact will cause serious injury or death.

Do not operate the mower with the discharge deflector raised, removed, or altered unless a grass collection system or mulch kit is in place and working properly.

---

1. Park the machine on a level surface, disengage the PTO, and engage the parking brake.
2. Shut off the engine, remove the key, and wait for all moving parts to stop before leaving the operating position.
3. Remove the damaged or worn grass deflector as shown.

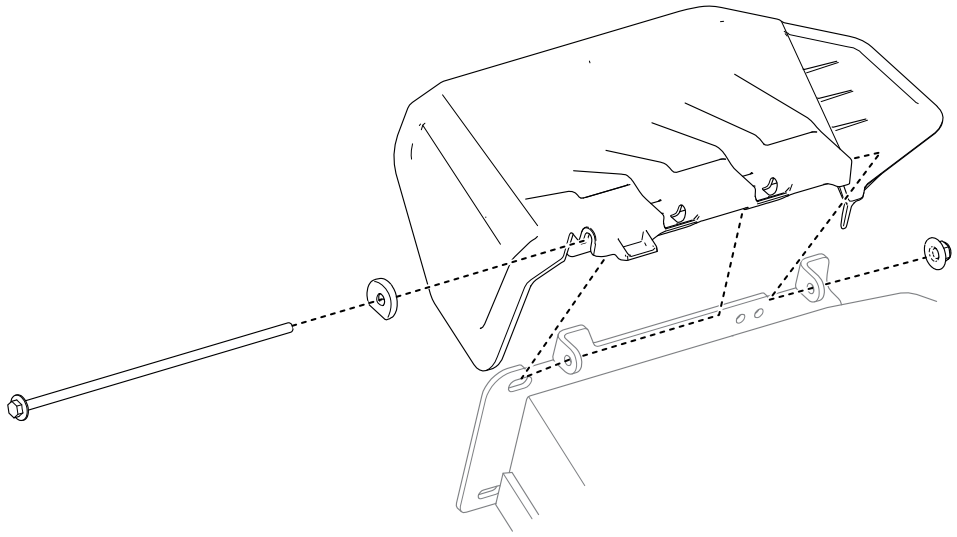

G560316

4. Use the removed fasteners to install the new deflector.

Chassis Maintenance

Checking for Loose Hardware

1. Park the machine on a level surface, disengage the PTO, and engage the parking brake.
2. Shut off the engine, remove the key, and wait for all moving parts to stop before leaving the operating position.
3. Visually inspect the machine for any loose hardware or any other possible problem. Tighten the hardware or correct the problem before operating.

Cleaning

Cleaning Debris from the Machine

1. Stop engine, wait for all moving parts to stop, and remove key. Engage parking brake.
2. Clean off any oil, debris, or grass build-up on the machine and cutting deck, especially under deck belt shields, around the fuel tank, around engine and exhaust area.

IMPORTANT

You can wash the machine with mild detergent and water. Do not pressure wash the machine. Avoid excessive use of water, especially near the control panel, around the engine, hydraulic pumps, and motors.

Cleaning the Engine and Exhaust System Area

⚠ WARNING ⚠

Excessive debris around engine cooling air intake and exhaust system area can cause engine, exhaust area, and hydraulic system to overheat which can create a fire hazard.

Clean all debris from engine and exhaust system area.

1. Stop engine, wait for all moving parts to stop, and remove key. Engage parking brake.
2. Clean all debris from rotating engine air intake screen, around engine shrouding, and exhaust system area.
3. Wipe up any excessive grease or oil around the engine and exhaust system area.
4. Clean oil coolers (if equipped) of all debris, dirt, and oil.

Cleaning the Cooling Fins

1. Stop engine, wait for all moving parts to stop, and remove key. Engage parking brake.
2. Remove cooling shroud access panels from engine and clean cooling fins. Also clean dust, dirt, and oil from external surfaces of engine which can cause improper cooling.
3. Make sure cooling shroud access panels are properly reinstalled. Operating the engine without cooling shroud access panels will cause engine damage due to overheating.

Cleaning Grass Build-Up the Under Deck

1. Stop the engine, wait for all of the moving parts to stop, and remove the key. Engage the parking brake.
2. Raise the deck to the transport (maximum cutting height) position. Lift the front of unit and support the machine using jack stands or equivalent support.
3. Clean out any grass build-up from the underside of deck and in discharge deflector.

Disposing of Waste

Engine oil, batteries, hydraulic fluid, and engine coolant are pollutants to the environment. Dispose of these according to your state and local regulations.

Storage Safety

- Park the machine on a level surface, disengage the drives, engage the parking brake, shut off the engine, remove the key, and wait for all moving parts to stop before leaving the operator's position.
- Wait for the machine to cool before servicing, adjusting, fueling, cleaning, or storing it.
- Clean grass and debris from the cutting unit, muffler, drives, grass catcher, and engine compartment to prevent fires.
- Clean up oil and fuel spills and remove fuel-soaked debris.
- Do not store the machine or fuel container where there is an open flame, spark, or pilot light, such as on a water heater or other appliance.

Preparing the Machine for Storage Over 30 Days

1. Park the machine on a level surface, disengage the PTO, and engage the parking brake.
2. Shut off the engine, remove the key, and wait for all moving parts to stop before leaving the operating position.
3. Clean the machine.

IMPORTANT

You can wash the machine with a mild detergent and water. Do not pressure-wash the machine. Avoid excessive use of water, especially near the drive system and engine. Pressure-washing can force dirt and water into critical parts, such as spindle bearings and electrical switches.

   A. Remove grass clippings, dirt, and grime from the external parts of the entire machine, especially the engine.
   B. Scrape any heavy buildup of grass and dirt from the underside of the mower, then wash the machine with a garden hose.
   C. Run the machine with the PTO switch engaged and the engine at high idle for 2 to 5 minutes after washing.
4. Check the parking brake operation.
5. Grease the machine.

6. Check the tire pressure.
7. Charge the battery.
8. Check the condition of the cutting blades.
9. Prepare the fuel system.
   A. Add a petroleum-based fuel stabilizer/conditioner to the fuel in the tank. **Do not use an alcohol-based stabilizer (ethanol or methanol).**
   B. Run the engine to distribute conditioned fuel through the fuel system for 5 minutes.
   C. Shut off the engine, allow it to cool, and drain the fuel tank using a pump-type syphon or operate the engine until it shuts off.
   D. Dispose of fuel properly per local regulations.

IMPORTANT

Do not store fuel containing stabilizer/conditioner longer than the duration recommended by the fuel-stabilizer manufacturer.

10. Prepare the engine.
    A. Service the air cleaner.
    B. Change the engine oil; dispose of used oil per local regulations.
    C. Remove the spark plugs and pour 30 ml (2 tablespoons) of engine oil into the spark plug holes.
    D. Place a rag over the spark plug holes to catch any oil spray, then crank the engine and distribute the oil inside the cylinder.
    E. Install the spark plugs, but do not install the wires.
11. Remove the battery or disconnect the negative (-) battery cable.

    Note: Store the battery in a cool, dry location, where it will not be exposed to extreme temperatures or water. Keep the battery fully charged, especially in temperatures below 0°C (32°F).
12. Check and tighten all fasteners. Repair or replace any worn, damaged, or missing parts.
13. Paint all scratched or bare metal surfaces with paint available from your Authorized Service Dealer.
14. Store the machine in a clean, dry garage or storage area. Cover the machine to protect it and keep it clean.

Storing the Battery

Note: Follow the tips below to properly store the battery.

- If you are storing the machine for more than 30 days, remove the battery and charge it fully.
- Store it either on the shelf or on the machine.
- Leave the cables disconnected if the battery is stored on the machine.

- Store the battery in a cool atmosphere to avoid quick deterioration of the charge in the battery.
- To prevent the battery from freezing, ensure that it is fully charged.
- The specific gravity of a fully charged battery is 1.265 to 1.299.

Battery Storage Tips

If you are storing the battery outside the machine, do the following:

- Store the battery in a cool, dry area in an upright position.
- Do not stack batteries directly on top of each other, unless they are in cartons.
- Do not stack more than 3 batteries (only 2 if the battery type is commercial).
- Test a wet battery every 4 to 6 months and charge it, if necessary.
- Always test and charge the battery before installation.

The starter does not crank.

Possible Cause	Corrective Action
The PTO switch is engaged	Disengage the PTO
One of the speed control levers are not in the neutral position.	Ensure the speed control lever is in the neutral position.
The battery does not have a full charge.	Charge the battery.
The parking brake is disengaged.	Engage the parking brake.
The electrical connections are corroded, loose, or faulty.	1. Check the electrical connections for good contact. 2. Clean the connector terminals thoroughly with electrical contact cleaner, apply dielectric grease and reconnect.
A fuse is blown.	Replace the blown fuse.
The neutral LCD indicator does not illuminate.	Check the reed switch.
The relay or switch is damaged.	Contact an Authorized Service Dealer.
There is a faulty battery shutdown during boost.	Cycle the key switch OFF, then ON. If cycling does not resolve issue, replace the battery.

The engine will not start, starts hard, or fails to keep running.

Possible Cause	Corrective Action
The fuel tank is empty.	Fill the fuel tank.
The throttle and choke are not in the correct position.	Be sure the throttle control is midway between the SLOW and FAST positions, and the choke is in the ON position for a cold engine or the OFF position for a warm engine.
There is dirt in fuel filter.	Replace the fuel filter.

Possible Cause	Corrective Action
There is dirt, water, or stale fuel is in the fuel system.	Contact an Authorized Service Dealer.
The air cleaner is dirty.	Clean or replace the air cleaner element.
Electrical connections are corroded, loose or faulty.	1. Check the electrical connections for good contact. 2. Clean connector terminals thoroughly with electrical contact cleaner, apply dielectric grease and reconnect.
The relay or switch is defective.	Contact an Authorized Service Dealer.
There is a faulty spark plug.	Clean, adjust, or replace spark plug.
The spark plug wire is not connected.	Check the spark plug wire connection.

The engine loses power.

Possible Cause	Corrective Action
The engine load is excessive.	Reduce the ground speed.
The air cleaner is dirty.	Clean or replace the air cleaner element.
The oil level in the crankcase is low.	Add oil to the crankcase.
The cooling fins and air passages for the engine are plugged.	Remove the obstructions from the cooling fins and air passages.
The vent system filter plugged.	Inspect vent filter; replace if dirty.
There is dirt in fuel filter.	Replace the fuel filter.
There is dirt, water, or stale fuel is in the fuel system.	Contact an Authorized Service Dealer.

The engine overheats.

Possible Cause	Corrective Action
The engine load is excessive.	Reduce the ground speed.
The oil level in the crankcase is low.	Add oil to the crankcase.
The cooling fins and air passages for the engine are plugged.	Remove the obstructions from the cooling fins and air passages.

The mower pulls left or right (with levers fully forward).

Possible Cause	Corrective Action
The tire pressure in the drive tires is not correct.	Adjust the tire pressure in the drive tires.
The tracking needs an adjustment.	1. Turn turnbuckle in the direction that the mower needs to be adjusted to. 2. Rotate the turnbuckle in 1/4 turn increments until the mower tracks correctly.

The machine does not drive.

Possible Cause	Corrective Action
The bypass valve is not closed tight.	Tighten the bypass valve.
The drive or pump belt is worn, loose, or broken.	Change the belt.
The drive or pump belt is off a pulley.	Change the belt.

The cutting height is uneven.

Possible Cause	Corrective Action
The blade(s) is not sharp.	Sharpen the blade(s).
A cutting blade(s) is/are bent.	Install a new cutting blade(s).
The mower is not level.	Level the mower from side-to-side and front-to-rear.
The underside of the mower deck is dirty.	Clean the underside of the mower deck.
The tire pressure is incorrect.	Adjust the tire pressure.
A blade spindle is bent.	Contact an Authorized Service Dealer.
The tips of the adjacent blades are at an uneven cutting height. The blade tips should be even within 3/16 inch which is approximately one blade thickness.	Replace the blades, spindles and (or) check for damage to the mower deck.

There is an abnormal vibration.

Possible Cause	Corrective Action
The cutting blade(s) is/are bent or unbalanced	Install a new cutting blade(s).
The blade mounting bolt is loose.	Tighten the blade mounting bolt.
The engine mounting bolts are loose.	Tighten the engine mounting bolts.
There is a loose engine pulley, idler pulley, or blade pulley.	Tighten the loose pulley.
The engine pulley is damaged.	Contact an authorized service dealer.
The blade spindle is bent.	Contact an authorized service dealer.
The belt is damaged.	Install a new belt.

The blades do not rotate.

Possible Cause	Corrective Action
The drive belt is off pulley.	1. Check the belt for damage; replace if necessary. 2. Install the drive belt and check the adjusting shafts and belt guides for the correct position.
The deck belt is worn, loose or broken.	Install the new deck belt.
The deck belt is off the pulley.	Install the deck pulley and check the idler pulley, idler arm and spring for the correct position and function.
The idler spring is broken or missing.	Replace the idler spring.
The electric clutch is damaged.	Contact an authorized service dealer.

The clutch will not engage.

Possible Cause	Corrective Action
The fuse is blown.	1. Replace the fuse. 2. Check the coil resistance, battery charge, charging system, and wiring connections and replace if necessary
There is a low voltage supply at the clutch.	Check the coil resistance, battery charge, charging system, and wiring connections and replace if necessary.

Possible Cause	Corrective Action
The coil is damaged	Replace the clutch
There is not enough current.	1. Repair or replace the clutch lead wire or electrical system. 2. Clean the connector contacts.
The rotor/armature airgap is too large.	Remove a shim, if equipped, or replace the clutch.

The engine idles at full throttle.

Possible Cause	Corrective Action
There is a clutch saver relay failure.	Replace the clutch saver relay or contact an Authorized Service Dealer.

Electrical Diagram

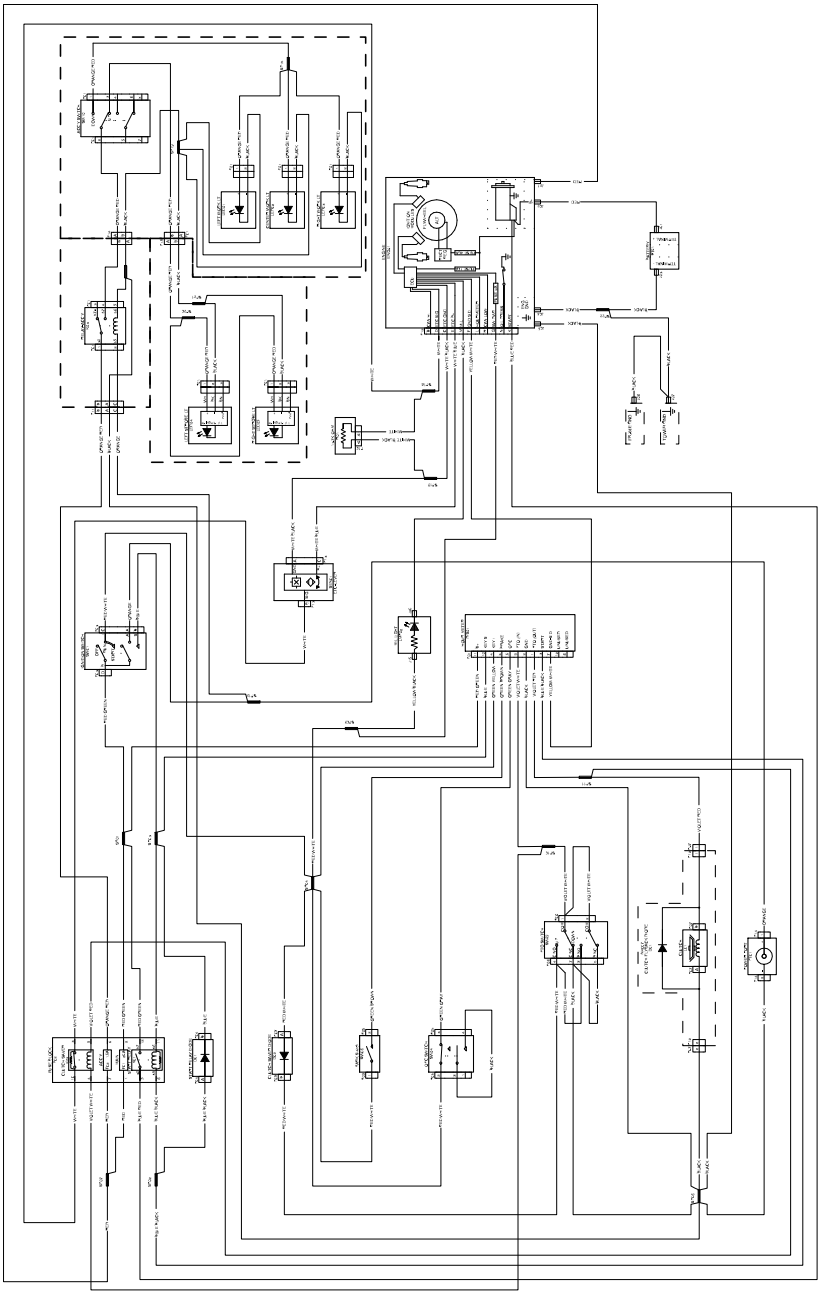

Hydraulic Diagram

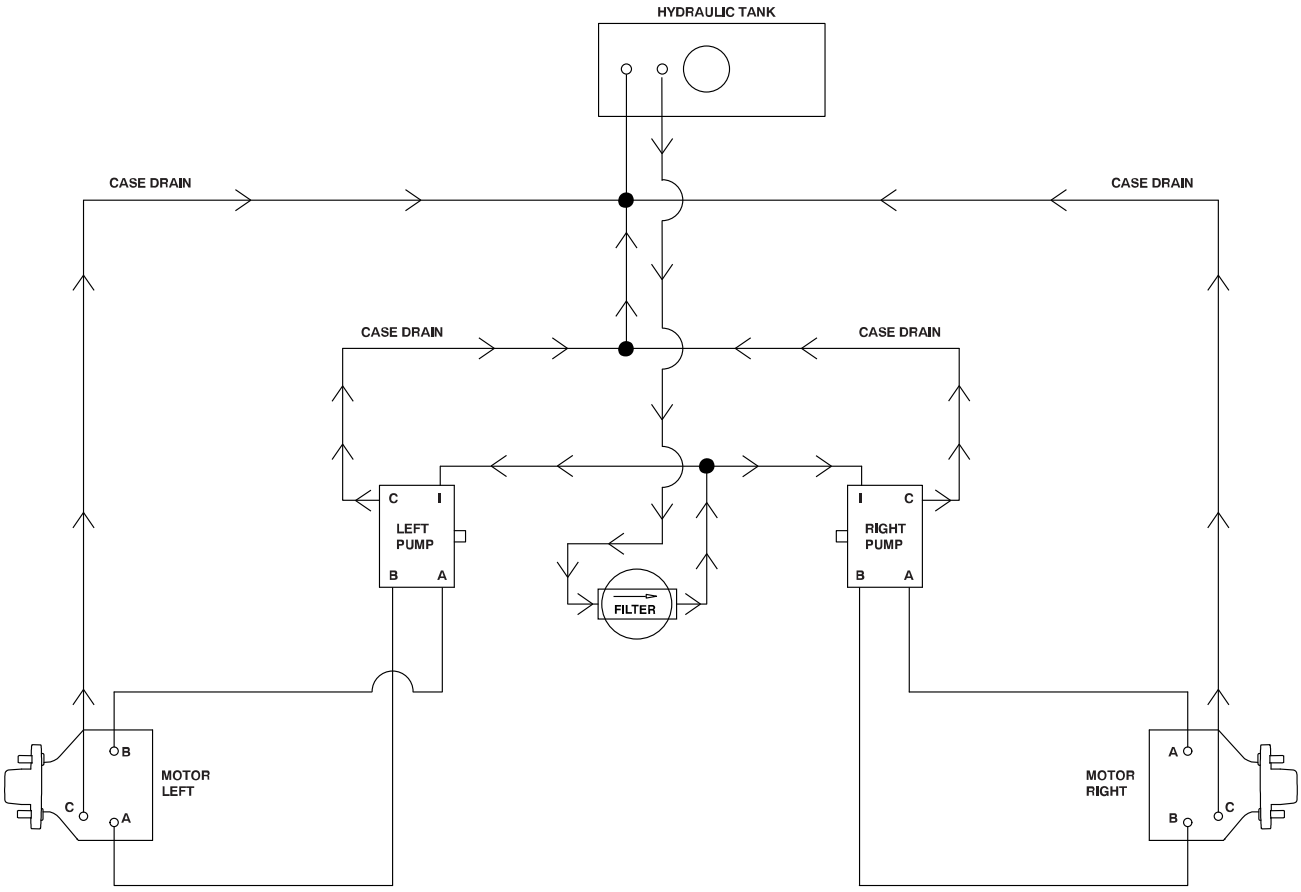

California Proposition 65 Warning Information

What is this warning?

You may see a product for sale that has a warning label like the following:



WARNING: Cancer and Reproductive Harm—www.p65Warnings.ca.gov.

What is Prop 65?

Prop 65 applies to any company operating in California, selling products in California, or manufacturing products that may be sold in or brought into California. It mandates that the Governor of California maintain and publish a list of chemicals known to cause cancer, birth defects, and/or other reproductive harm. The list, which is updated annually, includes hundreds of chemicals found in many everyday items. The purpose of Prop 65 is to inform the public about exposure to these chemicals.

Prop 65 does not ban the sale of products containing these chemicals but instead requires warnings on any product, product packaging, or literature with the product. Moreover, a Prop 65 warning does not mean that a product is in violation of any product safety standards or requirements. In fact, the California government has clarified that a Prop 65 warning "is not the same as a regulatory decision that a product is 'safe' or 'unsafe.'" Many of these chemicals have been used in everyday products for years without documented harm. For more information, go to https://oag.ca.gov/prop65/faqs-view-all.

A Prop 65 warning means that a company has either (1) evaluated the exposure and has concluded that it exceeds the "no significant risk level"; or (2) has chosen to provide a warning based on its understanding about the presence of a listed chemical without attempting to evaluate the exposure.

Does this law apply everywhere?

Prop 65 warnings are required under California law only. These warnings are seen throughout California in a wide range of settings, including but not limited to restaurants, grocery stores, hotels, schools, and hospitals, and on a wide variety of products. Additionally, some online and mail order retailers provide Prop 65 warnings on their websites or in catalogs.

How do the California warnings compare to federal limits?

Prop 65 standards are often more stringent than federal and international standards. There are various substances that require a Prop 65 warning at levels that are far lower than federal action limits. For example, the Prop 65 standard for warnings for lead is 0.5 µg/day, which is well below the federal and international standards.

Why don't all similar products carry the warning?

- Products sold in California require Prop 65 labelling while similar products sold elsewhere do not.
- A company involved in a Prop 65 lawsuit reaching a settlement may be required to use Prop 65 warnings for its products, but other companies making similar products may have no such requirement.
- The enforcement of Prop 65 is inconsistent.
- Companies may elect not to provide warnings because they conclude that they are not required to do so under Prop 65; a lack of warnings for a product does not mean that the product is free of listed chemicals at similar levels.

Why does Exmark include this warning?

Exmark has chosen to provide consumers with as much information as possible so that they can make informed decisions about the products they buy and use. Exmark provides warnings in certain cases based on its knowledge of the presence of one or more listed chemicals without evaluating the level of exposure, as not all the listed chemicals provide exposure limit requirements. While the exposure from Exmark products may be negligible or well within the "no significant risk" range, out of an abundance of caution, Exmark has elected to provide the Prop 65 warnings. Moreover, if Exmark does not provide these warnings, it could be sued by the State of California or by private parties seeking to enforce Prop 65 and subject to substantial penalties.


eXmark®