Form No. 3472-358 Rev A

TORO®

Count on it.

Operator's Manual

Flex-Force Power System™ 41cm (16in) 60V MAX Chainsaw

Model No. 51850—Serial No. 325000000 and Up
Model No. 51850T—Serial No. 325000000 and Up

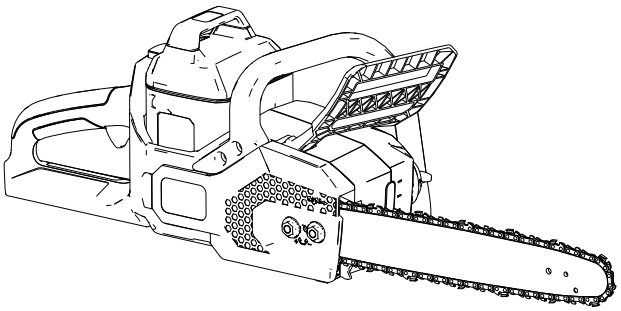

Register at www.Toro.com.
Original Instructions (EN)

3472-358

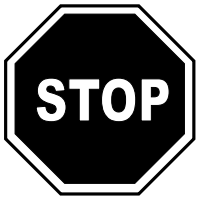

For assistance, please see www.Toro.com/support for instructional resources or contact your Authorized Service Dealer before returning this product.

⚠ WARNING

CALIFORNIA
Proposition 65 Warning

The power cord on this product contains lead, a chemical known to the State of California to cause birth defects or other reproductive harm. Wash hands after handling.

Use of this product may cause exposure to chemicals known to the State of California to cause cancer, birth defects, or other reproductive harm.

Introduction

This chain saw is designed for cutting tree branches, logs, and wooden beams of a diameter no longer than the cutting length of the guide bar. It is to be used only by adults. It is designed to use Flex-Force™ 60V lithium-ion battery packs. These battery packs are designed to be charged only by Flex-Force 60V lithium-ion battery chargers. Using these products for purposes other than their intended use could prove dangerous to you and bystanders. Using these products for purposes other than their intended use could prove dangerous to you and bystanders.

Model 51850T does not include a battery or a charger.

Read this information carefully to learn how to operate and maintain your product properly and to avoid injury and product damage. You are responsible for operating the product properly and safely.

Visit www.Toro.com for more information, including safety tips, training materials, accessory information, help finding a dealer, or to register your product.

Whenever you need service, genuine Toro parts, or additional information, contact an Authorized Service Dealer or Toro Customer Service and have the model and serial numbers of your product ready. Figure 1 identifies the location of the model and serial numbers on the product. Write the numbers in the space provided.

Important: **With your mobile device, you can scan the QR code (if equipped) on the serial number plate to access warranty, parts, and other product information.**

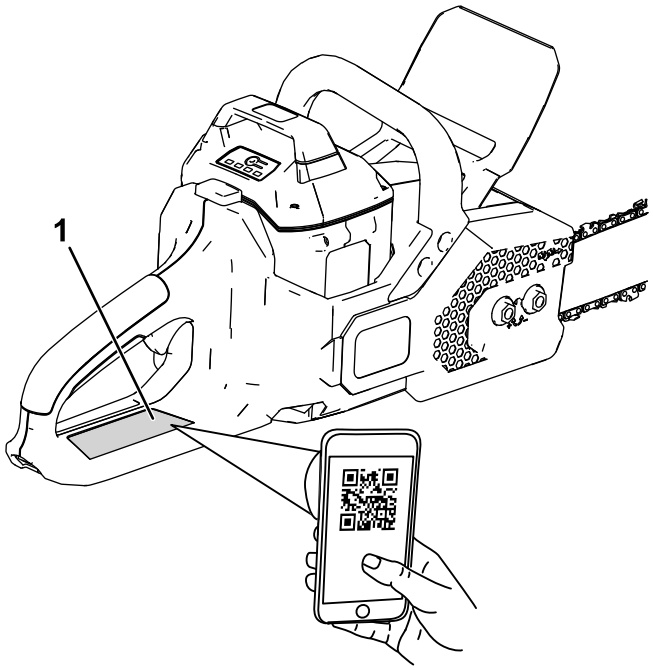

g425184

Figure 1

1. Model and serial number location.

Model No. _____

Serial No. _____

© 2025—The Toro® Company
8111 Lyndale Avenue South
Bloomington, MN 55420

Contact us at www.Toro.com.
Printed in China
All Rights Reserved

Safety-Alert Symbol

The safety-alert symbol (Figure 2) shown in this manual and on the machine identifies important safety messages that you must follow to prevent accidents.



g000502

Figure 2
Safety-alert symbol

The safety-alert symbol appears above information that alerts you to unsafe actions or situations and is followed by the word **DANGER**, **WARNING**, or **CAUTION**.

DANGER indicates an imminently hazardous situation which, if not avoided, **will** result in death or serious injury.

WARNING indicates a potentially hazardous situation which, if not avoided, **could** result in death or serious injury.

CAUTION indicates a potentially hazardous situation which, if not avoided, **may** result in minor or moderate injury.

This manual uses two other words to highlight information. **Important** calls attention to special mechanical information and **Note** emphasizes general information worthy of special attention.

Contents

Safety-Alert Symbol 3
Safety 4
..... 4
..... 6
Personal Protective Equipment 7
Decal Symbols 8
Setup 9
Mounting the Battery Charger (Optional) 9
Filling the Chain Saw with Bar and Chain Oil 9
Product Overview 10
Specifications 11
Attachments/Accessories 11
Operation 11
Before Using the Chain Saw 11
Starting the Chain Saw 12
Shutting Off the Chain Saw 12
Cutting with the Chain Saw 13
Pruning a Tree 14
Felling a Tree 14
Limbing a Fallen Tree 16
Bucking a Log 17
Installing the Battery Pack 18
Removing the Battery Pack 18
Charging the Battery Pack 18
Maintenance 20
Recommended Maintenance Schedule(s) 20
Checking the Oil Level and Adding Bar and Chain Oil 20
Checking the Chain Brake 21
Checking the Flow of Bar and Chain Oil 21
Adjusting the Chain Tension 22
Servicing the Guide Bar, Chain, and Drive Sprocket 23
Installing the Guide Bar and Chain 24
Sharpening the Chain 24
Service 24
Storage 25
Preparing the Battery Pack for Recycling 25
Troubleshooting 26

Safety

⚠ WARNING

Read all safety warnings, instructions, illustrations and specifications provided with this power tool.

Failure to follow all instructions listed below may result in electric shock, fire and/or serious injury.

Save all warnings and instructions for future reference.

The term "power tool" in all the warnings refers to your mains-operated (corded) power tool or battery-operated (cordless) power tool.

IMPORTANT SAFETY INSTRUCTIONS

I. Work area safety

1. **Keep work area clean and well lit.** *Cluttered or dark areas invite accidents.*
2. **Do not operate power tools in explosive atmospheres, such as in the presence of flammable liquids, gases, or dust.** *Power tools create sparks which may ignite the dust or fumes.*
3. **Keep children and bystanders away while operating a power tool.** *Distractions can cause you to lose control.*

II. Electrical safety

1. **Power tool plugs must match the outlet. Never modify the plug in any way. Do not use any adapter plugs with earthed (grounded) power tools.** *Unmodified plugs and matching outlets will reduce risk of electric shock.*
2. **Avoid body contact with earthed or grounded surfaces, such as pipes, radiators, ranges and refrigerators.** *There is an increased risk of electric shock if your body is earthed or grounded.*
3. **Do not expose power tools to rain or wet conditions.** *Water entering a power tool will increase the risk of electric shock.*
4. **Do not abuse the cord. Never use the cord for carrying, pulling or unplugging the power tool. Keep cord away from heat, oil, sharp edges or moving parts.** *Damaged or entangled cords increase the risk of electric shock.*
5. **When operating a power tool outdoors, use an extension cord suitable for outdoor use.** *Use of a cord suitable for outdoor use reduces the risk of electric shock.*
6. **If operating a power tool in a damp location is unavoidable, use a residual current device (RCD) protected supply.** *Use of an RCD reduces the risk of electric shock.*

III. Personal safety

1. **Stay alert, watch what you are doing and use common sense when operating a power tool. Do not use a power tool while you are tired or under the influence of drugs, alcohol, or medication.** *A moment of inattention while operating power tools may result in serious personal injury.*
2. **Use personal protective equipment. Always wear eye protection.** *Protective equipment such as dust mask, non-skid safety shoes, hard hat, or hearing protection used for appropriate conditions reduces personal injuries.*
3. **Prevent unintentional starting. Ensure the switch is in the OFF-position before connecting to power source and/or battery pack, picking up or carrying the tool.** *Carrying power tools with your finger on the switch or energizing power tools that have the switch on invites accidents.*
4. **Remove any adjusting key or wrench before turning the power tool on.** *A wrench or a key left attached to a rotating part of the power tool may result in personal injury.*
5. **Do not overreach. Keep proper footing and balance at all times.** *This enables better control of the power tool in unexpected situations.*
6. **Dress properly. Do not wear loose clothing or jewelry. Keep your hair and clothing away from moving parts.** *Loose clothes, jewelry, or long hair can be caught in moving parts.*
7. **If devices are provided for the connection of dust extraction and collection facilities, ensure these are connected and properly used.** *Use of dust collection can reduce dust-related hazards.*
8. **Do not let familiarity gained from frequent use of tools allow you to become complacent and ignore tool safety principles.** *A careless action can cause severe injury within a fraction of a second.*

IV. Power tool use and care

1. **Do not force the power tool. Use the correct power tool for your application.** *The correct power tool will do the job better and safer at the rate for which it was designed.*
2. **Do not use the power tool if the switch does not turn it on and off.** *Any power tool that cannot be controlled with the switch is dangerous and must be repaired.*
3. **Disconnect the plug from the power source and/or remove the battery pack, if detachable, from the power tool before making any adjustments, changing accessories, or storing power tools.** *Such preventive safety measures reduce the risk of starting the power tool accidentally.*
4. **Store idle power tools out of the reach of children and do not allow persons unfamiliar with the power tool or these instructions to operate the power tool.** *Power tools are dangerous in the hands of untrained users.*
5. **Maintain power tools and accessories. Check for misalignment or binding of moving parts, breakage of parts, and any other condition that may affect the power tool's operation. If damaged, have the power tool repaired before use.** *Many accidents are caused by poorly maintained power tools.*
6. **Keep cutting tools sharp and clean.** *Properly maintained cutting tools with sharp cutting edges are less likely to bind and are easier to control.*
7. **Use the power tool, accessories, and tool bits etc. in accordance with these instructions, taking into account the working conditions and the work to be performed.** *Use of the power tool for operations different from those intended could result in a hazardous situation.*
8. **Keep handles and grasping surfaces dry, clean and free from oil and grease.** *Slippery handles and grasping surfaces do not allow for safe handling and control of the tool in unexpected situations.*

V. Battery tool use and care

1. **Recharge only with the charger specified by the manufacturer.** *A charger that is suitable for one type of battery pack may create a risk of fire when used with another battery pack.*
2. **Use power tools only with specifically designated battery packs.** *Use of any other battery packs may create a risk of injury and fire.*
3. **When battery pack is not in use, keep it away from other metal objects, like paper clips, coins, keys, nails, screws or other small metal objects, that can make a connection from one terminal to another.** *Shorting the battery terminals together may cause burns or a fire.*
4. **Under abusive conditions, liquid may be ejected from the battery; avoid contact. If contact accidentally occurs, flush with water. If liquid contacts eyes, additionally seek medical help.** *Liquid ejected from the battery may cause irritation or burns.*
5. **Do not use a battery pack or tool that is damaged or modified.** *Damaged or modified batteries may exhibit unpredictable behavior resulting in fire, explosion or risk of injury.*
6. **Do not expose a battery pack or tool to fire or excessive temperature.** *Exposure to fire or temperature above 130 °C (265 °F) may cause explosion.*
7. **Follow all charging instructions and do not charge the battery pack or tool outside the temperature range specified in the instructions.** *Charging improperly or at temperatures outside the specified range may damage the battery and increase the risk of fire.*

VI. Service

1. **Have your power tool serviced by a qualified repair person using only identical replacement parts.** *This will ensure that the safety of the power tool is maintained.*
2. **Never service damaged battery packs.** *Service of battery packs should only be performed by the manufacturer or authorized service providers.*

VII. Chain saw safety

1. **Keep all parts of the body away from the saw chain when the chain saw is operating. Before you start the chain saw, make sure the saw chain is not contacting anything.** *A moment of inattention while operating chain saws may cause entanglement of your clothing or body with the saw chain.*
2. **Always hold the chain saw with your right hand on the rear handle and your left hand on the front handle.** *Holding the chain saw with a reversed hand configuration increases the risk of personal injury and should never be done.*
3. **Hold the chain saw by insulated gripping surfaces only, because the saw chain may contact hidden wiring.** *Saw chains contacting a "live" wire may make exposed metal parts of the chain saw "live'" and could give the operator an electric shock.*
4. **Wear eye protection. Further protective equipment for hearing, head, hands, legs and feet is recommended.** *Adequate protective equipment will reduce personal injury from flying debris or accidental contact with the saw chain.*
5. **Do not operate a chain saw in a tree, on a ladder, from a rooftop, or any unstable support.** *Operation of a chain saw in this manner could result in serious personal injury.*
6. **Always keep proper footing and operate the chain saw only when standing on fixed, secure and level surface.** *Slippery or unstable surfaces such as ladders may cause a loss of balance or control of the chain saw.*
7. **When cutting a limb that is under tension, be alert for spring back.** *When the tension in the wood fibers is released, the spring loaded limb may strike the operator and/or throw the chain saw out of control.*
8. **Use extreme caution when cutting brush and saplings.** *The slender material may catch the saw chain and be whipped toward you or pull you off balance.*
9. **Carry the chain saw by the front handle with the chain saw switched off and away from your body. When transporting or storing the chain saw, always fit the guide bar cover and remove the battery.** *Proper handling of the chain saw will reduce the likelihood of accidental contact with the moving saw chain.*
10. **Follow instructions for lubricating, chain tensioning, and changing the bar and chain.** *Improperly tensioned or lubricated chain may either break or increase the chance for kickback.*
11. **Cut wood only. Do not use chain saw for purposes not intended. For example: do not use chain saw for cutting metal, plastic, masonry or non-wood building materials.** *Use of the chain saw for operations different than intended could result in a hazardous situation.*
12. **Do not attempt to fell a tree until you have an understanding of the risks and how to avoid them.** *Serious injury could occur to the operator or bystanders while felling a tree.*
13. **Follow all instructions when clearing jammed material, storing or servicing the chain saw. Make sure the switch is off and the battery pack is removed.** *Unexpected actuation of the machine while clearing jammed material or servicing may result in serious personal injury.*
14. **Causes and operator prevention of kickback.** *Kickback may occur when the nose or tip of the guide bar touches an object, or when the wood closes in and pinches the saw chain in the cut.*

    Tip contact in some cases may cause a sudden reverse reaction, kicking the guide bar up and back towards the operator.

    Pinching the saw chain along the top of the guide bar may push the guide bar rapidly back towards the operator.

    Either of these reactions may cause you to lose control of the saw, which could result in serious personal injury. Do not rely exclusively upon the safety devices built into your saw. As a chain saw user, you should take several steps to keep your cutting jobs free from accident or injury.

    Kickback is the result of chain saw misuse and/or incorrect operating procedures or conditions and can be avoided by taking proper precautions as given below:

    A. **Maintain a firm grip, with thumbs and fingers encircling the chain saw handles, with both hands on the saw and position your body and arm to allow you to resist kickback forces.** *Kickback forces can be controlled by the operator, if proper precautions are taken. Do not let go of the chain saw.*

    B. **Do not overreach and do not cut above shoulder height.** *This helps prevent unintended tip contact and enables better control of the chain saw in unexpected situations.*

C. **Only use replacement guide bars and saw chains specified by the manufacturer.** *Incorrect replacement guide bars and saw chains may cause chain breakage and/or kickback.*

D. **Follow the manufacturer's sharpening and maintenance instructions for the saw chain.** *Decreasing the depth gauge height can lead to increased kickback.*

SAVE THESE INSTRUCTIONS

Personal Protective Equipment

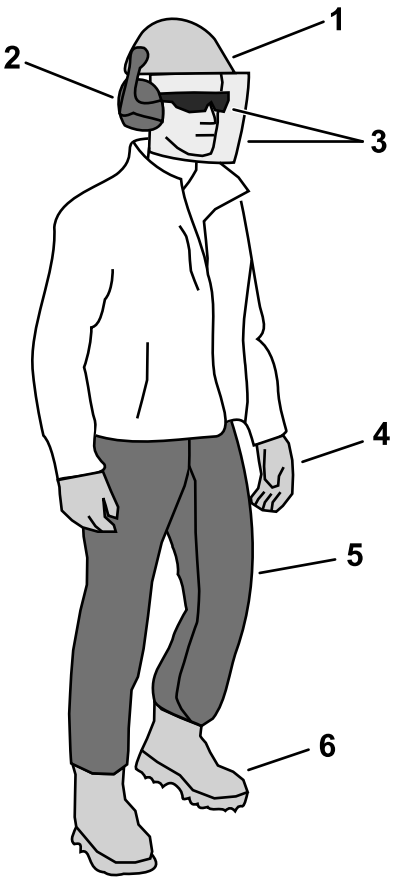

g316566

Figure 3

1. Wear a hard hat in situations where debris may contact the head.
2. Wear hearing protection
3. Wear safety glasses and/or a face shield
4. Wear gloves
5. Wear protective pants or chaps
6. Wear substantial, slip-resistant footwear

Decal Symbols

Safety decals and instructions are easily visible to the operator. Replace any decal that is damaged or missing.

The following table describes the safety symbols that appear on the decals.

Chain Saw Decal Symbol	Explanation
	Cutting hazard of hand
	Stay away from moving parts.
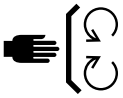	Keep all guards and shields in place.
	Kickback hazard
	Do not contact objects with the guide bar tip.
	Do not operate the chain saw using only one hand.
	Do not expose to rain or snow.
	Read the *Operator's Manual*.
	Wear hearing protection.
	Wear eye protection.
	Always use 2 hands when operating the chain saw.

Setup

Important: **The battery pack is not fully charged when it is purchased. Before using the machine for the first time, refer to Charging the Battery Pack (page 18).**

Mounting the Battery Charger (Optional)

If desired, mount the battery charger securely on a wall using the wall-mount key holes on the back of the charger.

Mount it indoors (such as a garage or other dry place), near a power outlet, and out of the reach of children.

Refer to Figure 4 for assistance in mounting the charger.

Slide the charger over the appropriately positioned hardware to secure the charger in place (hardware not included).

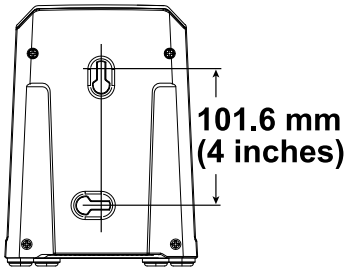

g290534

Figure 4

Filling the Chain Saw with Bar and Chain Oil

Important: **Use only bar and chain oil (sold separately).**

Fill the chain saw with bar and chain oil; refer to Checking the Flow of Bar and Chain Oil (page 21).

Product Overview

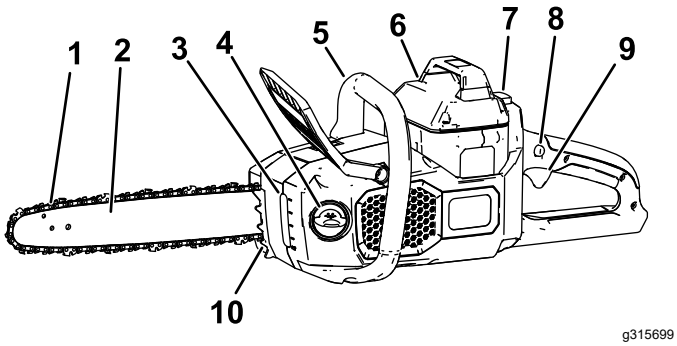

g315699

Figure 5

Left side shown

1. Chain
2. Guide bar
3. Oil window
4. Oil cap
5. Front handle
6. Battery pack
7. Button latch
8. Trigger lock
9. Trigger
10. Bucking teeth

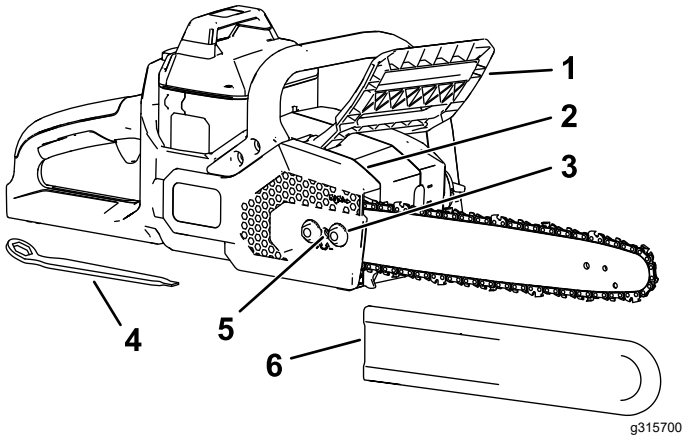

g315700

Figure 6

Right side shown

1. Chain brake
2. Side cover
3. Captive cover nut
4. Multitool (located beneath rear handle)
5. Chain tensioning screw
6. Guide bar cover

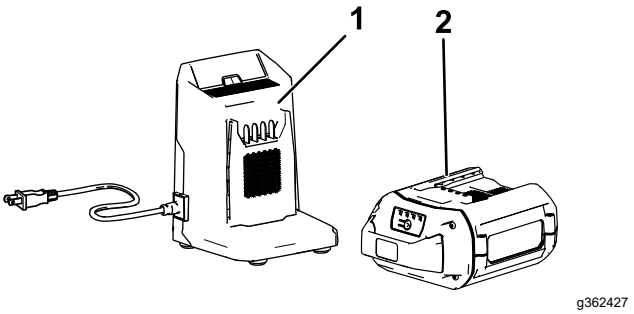

g362427

Figure 7

1. 2A battery charger (included with Model 51850)
2. 2.5 Ah battery pack (included with Model 51850)

Specifications

Model	51850/51850T
Bar Length (with 88613 and 88614 equipped)	40.6 cm (16 inches)
Chain Gauge (with 88613 and 88614 equipped)	0.043 inches
Chain Pitch (with 88613 and 88614 equipped)	3/8 inch
Chain Length (with 88613 and 88614 equipped)	56 links
Rated Voltage	60V DC maximum, 54 VDC nominal usage
Weight (without a battery)	4.35 kg (9.59 lb)
Charger Type	Flex-Force 60V lithium-ion chargers
Battery Type	Flex-Force 60V lithum-ion batteries

Appropriate Temperature Ranges

Charge/store the battery pack at	5°C (41°F) to 40°C (104°F)*
Use the battery pack at	-30°C (-22°F) to 49°C (120°F)*
Use the tool at	0°C (32°F) to 49°C (120°F)*

*Charging time will increase if you do not charge the battery within this range.

Store the tool, battery pack, and battery charger in an enclosed clean, dry area.

Attachments/Accessories

A selection of Toro approved attachments and accessories is available for use with the machine to enhance and expand its capabilities. Contact your Authorized Service Dealer or authorized Toro distributor or go to www.Toro.com for a list of all approved attachments and accessories.

To ensure optimum performance and continued safety certification of the machine, use only genuine Toro replacement parts and accessories. Replacement parts and accessories made by other manufacturers could be dangerous.

Operation

Before Using the Chain Saw

Before using the chain saw, do the following:

- Check the chain tension; refer to Adjusting the Chain Tension (page 22).
- Clean the chain saw components, inspect them for excessive wear or damage, and replace them as needed; refer to Servicing the Guide Bar, Chain, and Drive Sprocket (page 23).
- Check the chain for sharpness and damage, and sharpen or replace as needed; refer to Sharpening the Chain (page 24).
- Check the oil level; refer to Checking the Oil Level and Adding Bar and Chain Oil (page 20).
- Check the chain brake; refer to Checking the Chain Brake (page 21).
- Check the chain saw for damage, general appearance, and performance; ensure that the switches move freely, the vents and handles are clean, and the bar is not bent or damaged.

Starting the Chain Saw

1. Ensure that the vents on the chain saw are free from dust and debris (Figure 8).

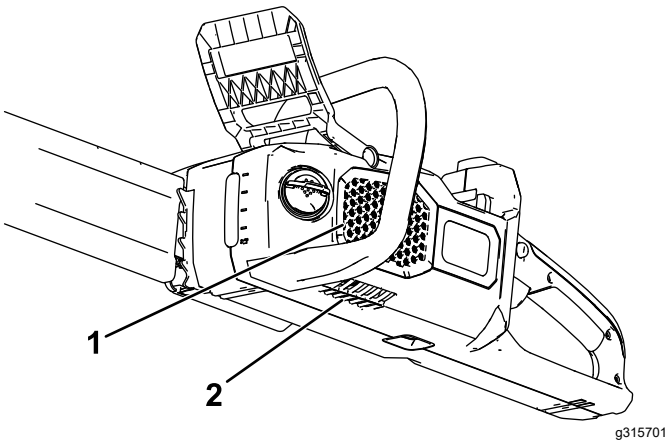

g315701

Figure 8

1. Side vent
2. Bottom vent

2. Set the chain saw down on a level surface.
3. Align the tongue of the battery pack with the battery cavity in the chain saw (Figure 9).

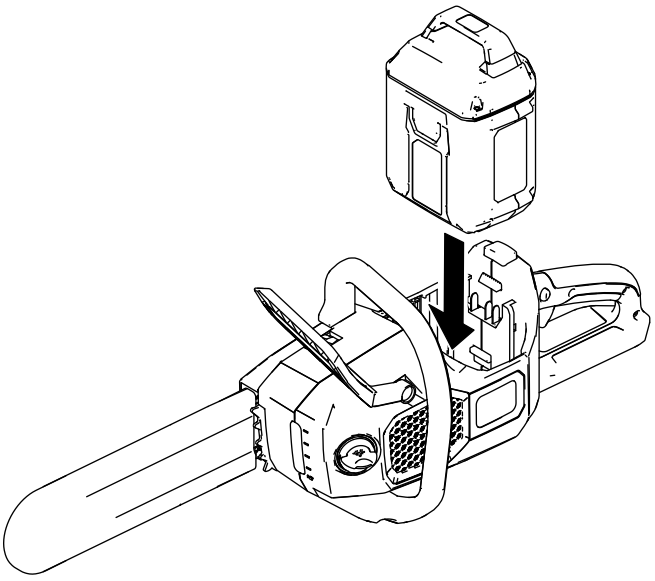

g315702

Figure 9

4. Push the battery pack into the battery cavity until the battery pack locks into place.
5. Remove the protective cover from the chain.
6. Ensure that the chain brake is in the OPERATING position (Figure 10).

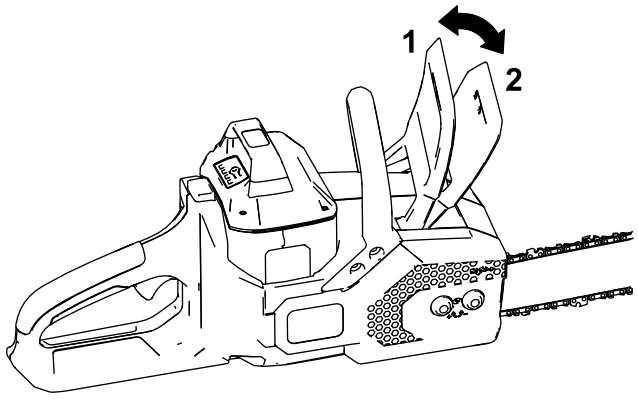

g315703

Figure 10

1. Chain brake (OPERATING position)
2. Chain brake (STOP position)

7. With your left hand on the front handle and your right hand on the rear handle, press the trigger lock, then squeeze the trigger (Figure 11).

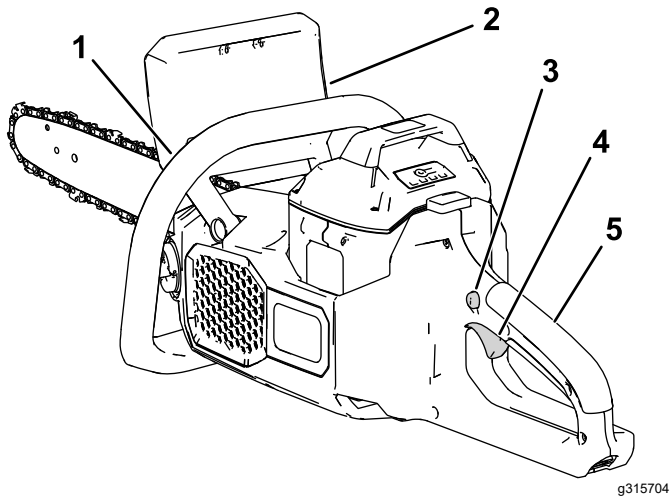

g315704

Figure 11

1. Front handle
2. Chain brake
3. Trigger lock
4. Trigger
5. Rear handle

Shutting Off the Chain Saw

To shut off the chain saw, release the trigger.

Whenever you are not using the saw or are transporting the saw to or from the work area, move the chain brake to the STOP position (Figure 10) and remove the battery pack.

Cutting with the Chain Saw

⚠ WARNING

Operating a chain saw improperly can cause serious personal injury or death.

Read and follow all operating instructions carefully to avoid possible personal injury.

⚠ WARNING

Kickback can cause serious or fatal injury to you.

Always ensure that the chain brake system is working properly before you operate the chain saw.

Avoid touching objects to be cut with the nose of the chain saw guide bar.

There are 2 types of kickback:

- A fast **upward** motion of the chain saw that results when the chain at the nose or top of the bar contacts an object
- A fast **backward** motion of the chain saw that results when the chain at the nose or top of the bar is pinched by the object being cut

Figure 12 shows the area of the bar to avoid contacting an object to prevent kickback.

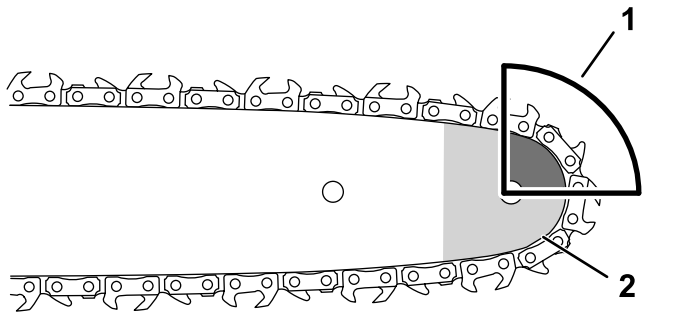

Figure 12

1. Kickback area (nose, top of the bar)
2. Nose

1. Grip the chain saw with 2 hands, with your left hand on the front handle and your right hand on the rear handle as shown in Figure 13.

   Important: **Keep your left arm straight with your elbow locked to help reduce kickback.**

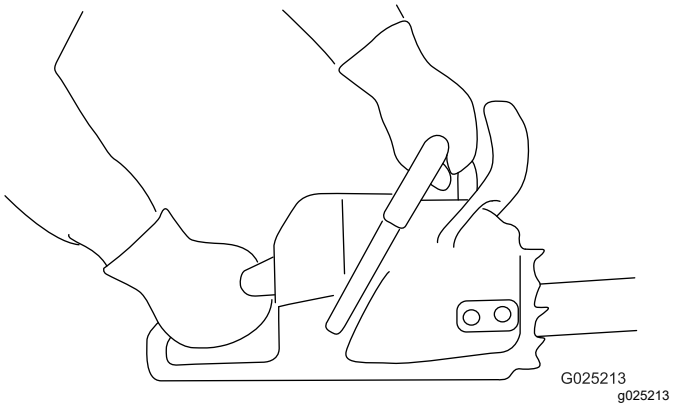

Figure 13

2. Stand on solid, even ground in front of the wood to be cut.
3. Stand to the **left side** of the chain saw, **not in line with the chain**, and position yourself for balanced, stable footing while cutting.

   Important: **Do not stand on the wood that you are cutting.**
4. Ensure that you only cut the wood that you intend to cut; do not allow the saw chain to contact the earth, other logs, or any other objects when cutting.
5. Ensure that the saw chain is rotating at full speed before starting a cut.
6. Cut with the wood near the rear of the guide bar, close to the bucking teeth; press the chain saw lightly against the wood and allow the weight of the chain saw to drive the cutting.

   Note: You can use the bucking teeth (Figure 14) to apply light pressure.

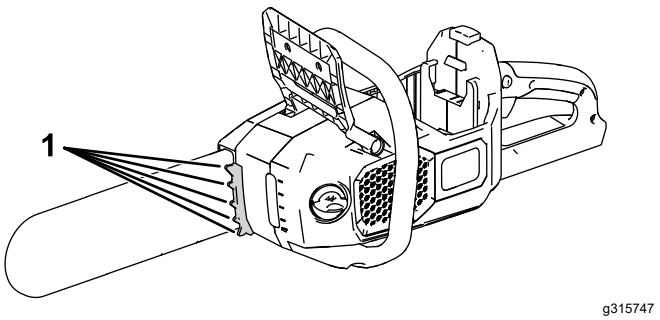

Figure 14

1. Bucking teeth

7. Keep steady pressure on the chain saw, cutting in a straight line, and release pressure only near the end of the cut.

Pruning a Tree

⚠ WARNING

Cutting higher limbs from a tree off the ground can put you in an unstable position that could be unsafe for you while handling a chain saw, resulting in possible serious personal injury or death to you or bystanders.

When cutting limbs from a standing tree, use the following practices:

- **Do not climb on limbs or branches with a chain saw.**
- **Do not overreach, and cut with both hands on the chain saw.**
- **Ensure that all bystanders are away from the area where branches may fall.**

1. Grip the chain saw as shown in Figure 13.
2. While cutting small branches, apply light pressure to the branch to be cut.
3. While cutting larger branches, make a shallow undercut and then complete the cut from the topside of the branch.
   A. Cut from the underside of the limb about 15 cm (6 inches) from the trunk. Cut a third of the way through the limb.
   B. Cut 5.0 to 10.0 cm (2 to 4 inches) farther out on the limb and from above. Cut the limb until it falls.
   C. Cut the limb stub at the branch collar (Figure 15).

   Important: **Do not cut the limb past the collar, flush to the trunk, or leave a large limb stub; this damages the tree.**

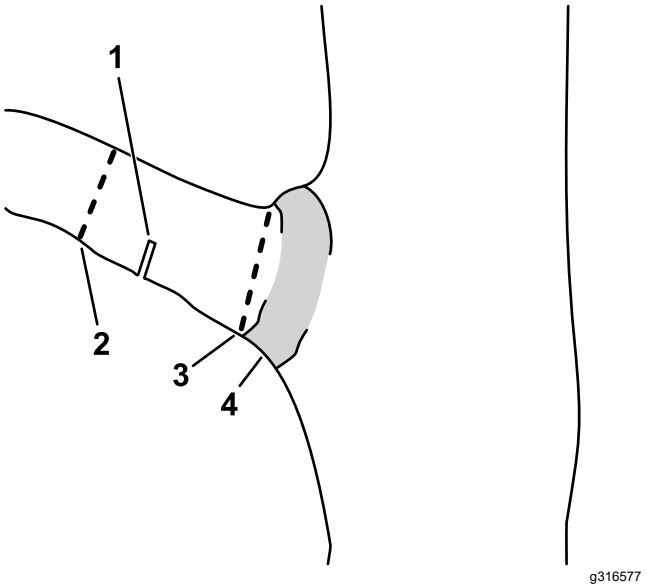

Figure 15

1. First relief undercut
2. Second through cut
3. Final pruning cut to remove the limb stub
4. Branch collar (where the trunk transitions to the limb)

Felling a Tree

⚠ WARNING

Cutting standing trees requires expertise and poses hazards.

- **Before attempting to cut a big tree, practice cutting a few branches, limbs, or small logs to familiarize yourself with the chain saw.**
- **Do not use this chain saw to fell large trees with a diameter larger than the length of the guide bar.**

⚠ DANGER

Loose or tangled limbs above you may be dislodged by vibration from cutting, causing severe injury or death.

Always look overhead for loose and tangled limbs before cutting; if you see any loose limbs or branches, remove them before cutting.

The proper operator stance for felling a tree is shown in Figure 16.

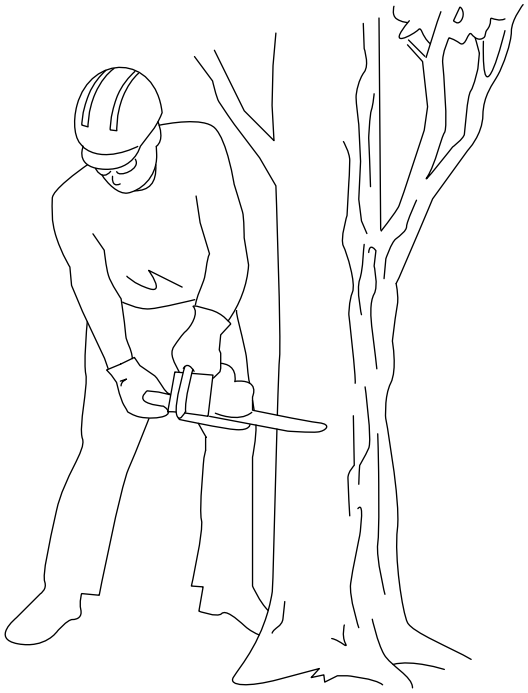

g195831

Figure 16

1. Determine the direction that the tree will fall. Take the following variables into consideration:
   - Wind direction
   - Heavier limbs on 1 side of the tree
   - Natural tilt of the tree (if any)
2. Determine a clear, safe retreat path away from the danger area; refer to Figure 17.

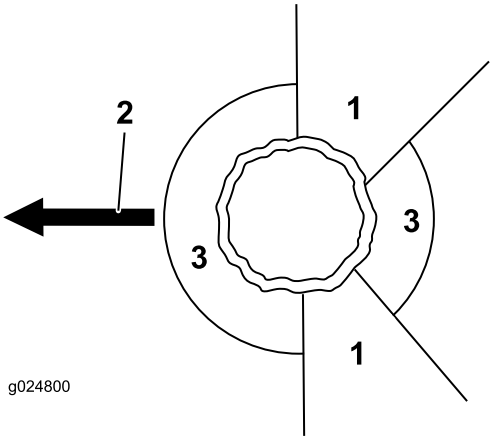

g024800

Figure 17

1. Retreat path (at a 45° angle opposite from the planned direction of fall)
2. Planned direction of fall
3. Danger area

3. Grip the chain saw as shown in (Figure 13).
4. Make the first cut a third of the way through the tree diameter on the side where you want the tree to fall (Figure 18).

Note: Making this cut prevents the chain saw from being pinched while making the next cut.

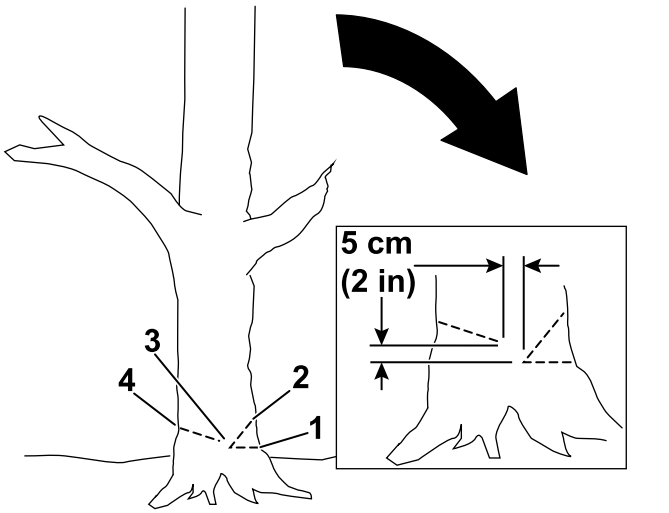

g228707

Figure 18

1. First cut
2. Second cut
3. Hinge
4. Back cut

5. Make a second cut to form a notch, starting the cut at least 5 cm (2 inches) above and away from the first cut (Figure 18).

   Important: **Ensure that the first cut and the second cut meet at the same point, forming a clean notch.**

6. Make the back cut from the opposite side of the notch and about 5 cm (2 inches) higher than the bottom of the notch as shown in Figure 18.

   Important: **Stop the third cut 2.5 to 5.0 cm (1 to 2 inches) from the notch to form a hinge between the cuts (Figure 18), which keeps the tree from falling in the wrong direction or twisting as it falls.**

   Note: As the back cut nears the hinge (Figure 18), the tree should begin to fall.

7. When the tree begins to fall, remove the chain saw, shut it off, put it down, and retreat along the path you determined in step 2.

   Important: **If the tree begins to fall in an undesired direction, immediately stop the cut, shut off the chain saw, put the chain saw down, and use a non-metallic wedge to open the back cut and push the tree in the desired direction.**

Limbing a Fallen Tree

1. Grip the chain saw as shown in Figure 13.
2. Moving from the base of the tree up, cut off the smaller limbs from the tree that are not supporting its weight off the ground (Figure 19).
3. Cut the larger limbs that support the weight of the tree from the bottom upward so that the limbs do not pinch the saw blade (Figure 20).

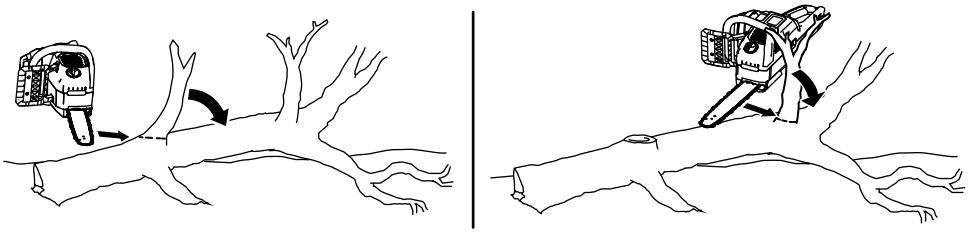

g537670

Figure 19

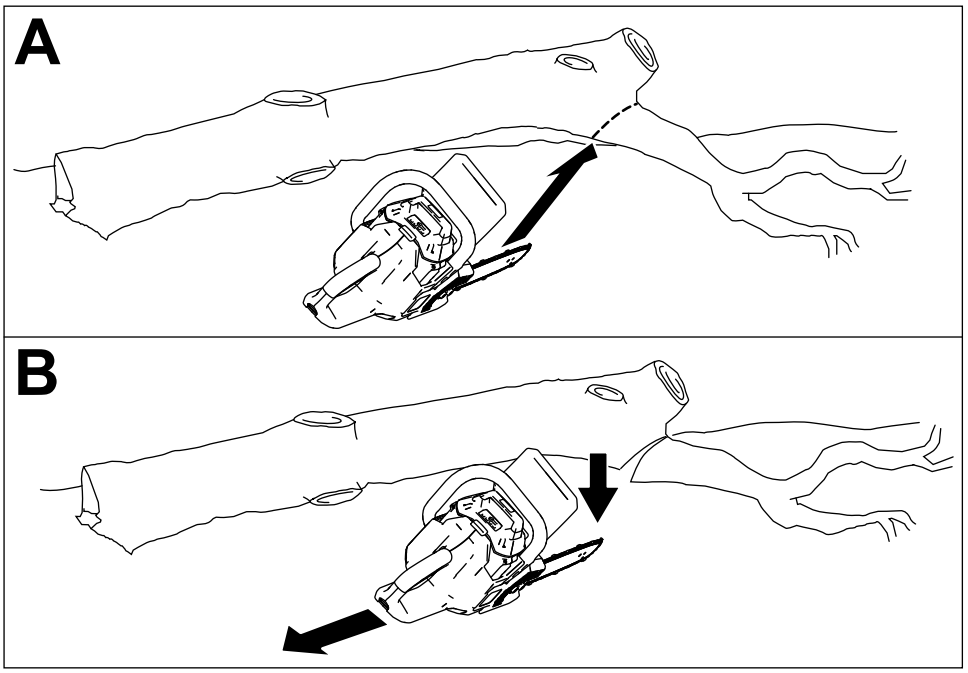

g537672

Figure 20

Bucking a Log

When bucking a log, note where the log is supported and where there is a load on the log. Cut the log so that when the ends fall, your guide bar will not be pinched between them.

Important: **If the chain saw binds in the cut, do not attempt to free it by running the motor. Shut off the saw, remove the battery, then use a wedge to pry open the cut and release the saw.**

If you are cutting branches from a fallen tree or cutting a log into lengths, support the log off the ground (preferably on a sawbuck).

- If the log is supported on both ends, but not in the middle, the load is on the center of the log.
  - Start from the top and cut about a third of the way through the log (A of Figure 21).
  - Make a second cut from the underside to meet the first cut (B of Figure 21). This keeps the log from pinching the saw.

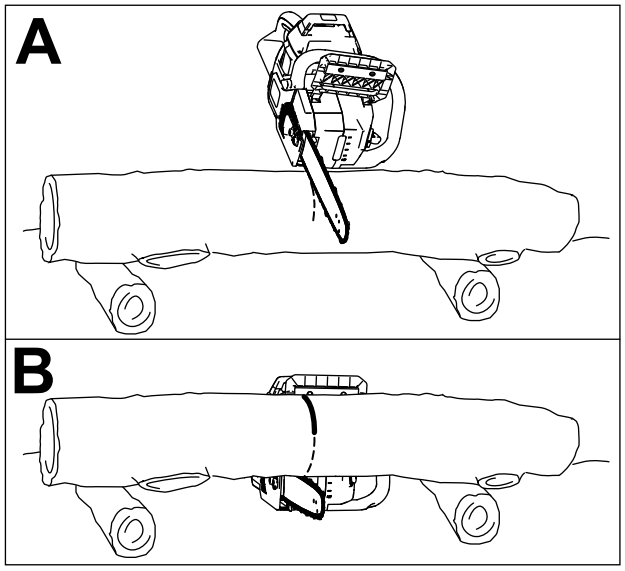

g315765

Figure 21

- If the log is supported on a single end, the load is on the free end of the log.
  - Start from the underside and cut about a third of the way through the log.
  - Make a second cut from the top to meet the first cut. This keeps the log from pinching the saw.
- If the log is supported off the ground along its entire length, without a heavy load on the log at any point, cut all the way through the log from the top.
- If the log is on a hill, always stand on the uphill side of the log (Figure 22).

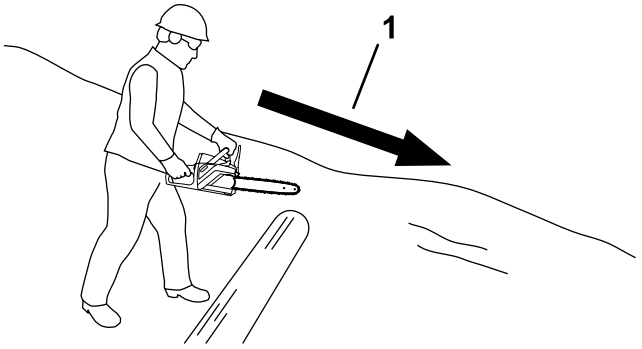

g315767

Figure 22

1. Direction of slope

- If the whole length of the log is supported on flat, level ground, cut a third of the diameter from the top, then roll the log over and make another cut to meet the first cut (Figure 23).

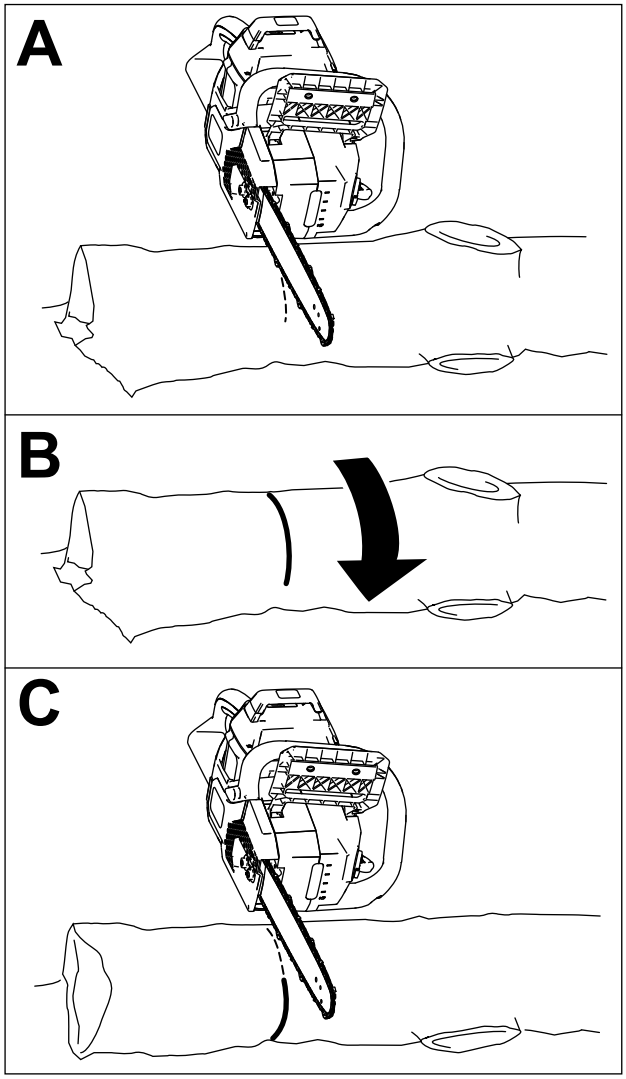

g315766

Figure 23

Installing the Battery Pack

Important: **Use the battery pack only in temperatures that are within the appropriate range; refer to Specifications (page 11).**

1. Set the chain saw down on a level surface.
2. Align the tongue of the battery pack with the battery cavity in the chain saw (Figure 24).

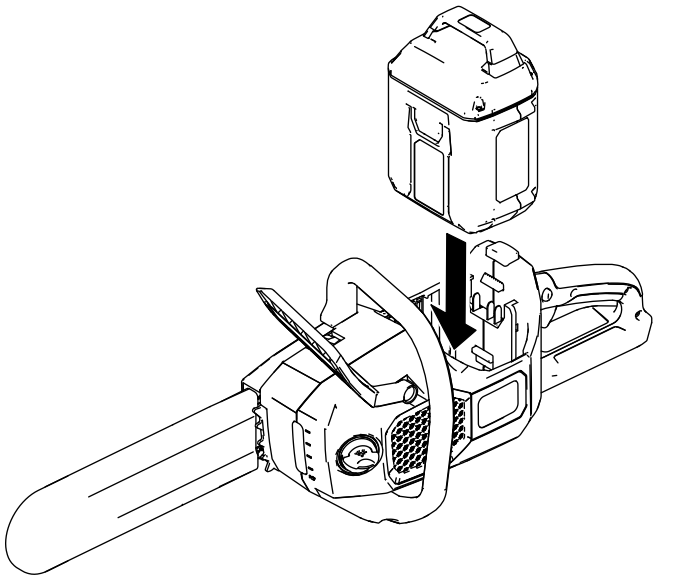

g315702

Figure 24

3. Push the battery pack into the battery cavity until the battery pack locks into place.

Removing the Battery Pack

1. Place the chain saw on a flat surface.
2. Press down on the latch and remove the battery pack from the cavity.

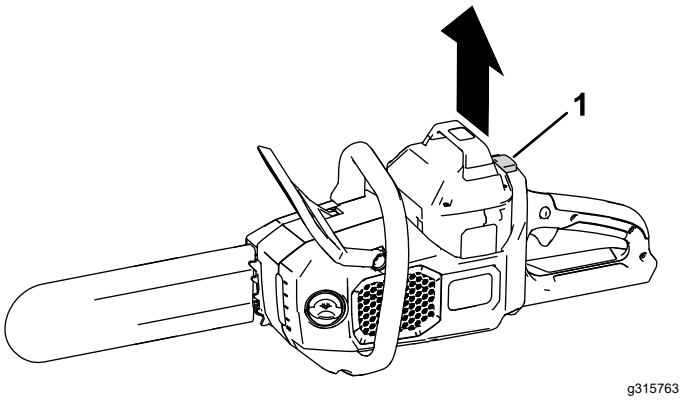

g315763

Figure 25

1. Latch

Charging the Battery Pack

Important: **The battery pack is not fully charged when you purchase it. Before using the tool for the first time, place the battery pack in the charger and charge it until the LED display indicates the battery pack is fully charged. Read all safety precautions.**

Important: **Charge the battery pack only in temperatures that are within the appropriate range; refer to Specifications (page 11).**

Note: At any time, press the battery-charge-indicator button on the battery pack to display the current charge (LED indicators).

1. Ensure that the vents and charging terminals on the battery pack and charger are clear of any dust and debris.

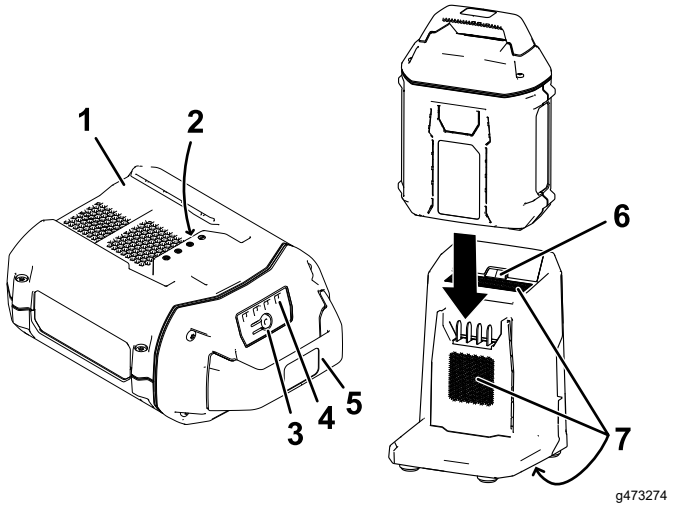

g473274

Figure 26

1. Battery-pack cavity
2. Battery-pack terminals
3. Battery-charge-indicator button
4. LED indicators (current charge)
5. Handle
6. Charger LED indicator light
7. Charger venting areas

2. Line up the cavity in the battery pack (Figure 26) with the tongue on the charger.
3. Slide the battery pack into the charger until it is fully seated (Figure 26).
4. To remove the battery pack, slide the battery backward out of the charger.

5. Refer to the following table to interpret the LED indicator light on the battery charger.

Charger Symbol	Indicator Light	Indicates
	Green blinking	Battery pack is charging
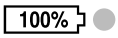	Green	Battery pack is charged
	Red	Battery pack and/or battery charger is over or under the appropriate temperature range
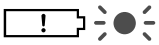	Red blinking	Battery pack charging fault*
	Off	No battery pack inserted

*Refer to Troubleshooting (page 26) for more information.

Important: **The battery pack can be left on the charger for short periods between uses.**

If the battery pack will not be used for longer periods, remove the battery pack from the charger; refer to Storage (page 25).

Maintenance

Recommended Maintenance Schedule(s)

Maintenance Service Interval	Maintenance Procedure
Before each use or daily	• Check the oil level and add bar and chain oil if necessary. • Check the chain brake. • Check that oil is flowing to the chain. • Check the chain tension and adjust it if necessary. • Ensure that the bar is straight and undamaged. • Check the chain for sharpness; contact an Authorized Service Dealer to have the chain sharpened or replaced.
After each battery drain cycle	• Check the oil level and add bar and chain oil if necessary. • Check the chain brake. • Check the chain tension and adjust it if necessary.
Yearly or before storage	• Service the guide bar, chain, and drive sprocket. • Check the chain for sharpness; contact an Authorized Service Dealer to have the chain sharpened or replaced.

Checking the Oil Level and Adding Bar and Chain Oil

Service Interval: Before each use or daily

After each battery drain cycle

Important: **Use only bar and chain oil (sold separately).**

1. Shut off the chain saw and remove the battery pack; refer to Removing the Battery Pack (page 18).
2. Check the oil level in the window. If the oil does not fill the window, add bar and chain oil as needed (Figure 27).

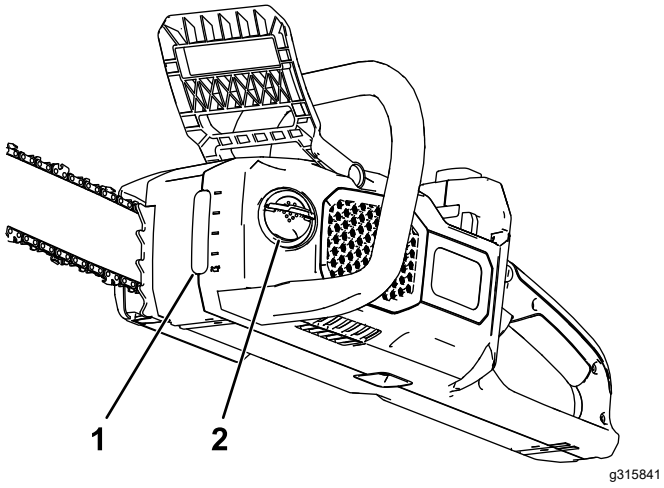

Figure 27

1. Oil window
2. Oil cap

3. Place the chain saw on a flat surface with the oil cap facing up.
4. Clean the area around the oil cap (Figure 27).

   Note: Ensure that you do not allow debris/wood chips to enter the oil tank.
5. Unfold the wing-nut tab on the oil cap tab, remove the cap, and pour bar and chain oil into the chain saw until the oil fills the tank (Figure 27).

   Important: **Do not fill the chain saw higher than the bottom of the fill neck.**
6. Clean up any spilled oil, secure the oil cap, and fold the wing-nut tab down.
7. Ensure that oil is flowing to the chain; refer to Checking the Flow of Bar and Chain Oil (page 21).

Checking the Chain Brake

Service Interval: Before each use or daily

After each battery drain cycle

1. Engage the chain brake by moving the chain brake forward to the STOP position (Figure 28).

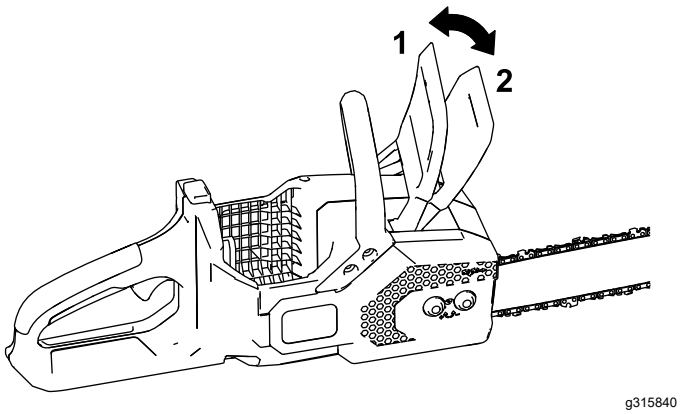

Figure 28

1. Chain brake (OPERATING position)
2. Chain brake (STOP position)

2. Prepare to test the chain saw operation; refer to Before Using the Chain Saw (page 11).
3. Attempt to start the chain saw. If it starts, take the chain saw to an Authorized Service Dealer for repair.
4. Disengage the chain brake by moving the chain brake rearward to the OPERATING position (Figure 28).

Checking the Flow of Bar and Chain Oil

Service Interval: Before each use or daily

1. Prepare to use the chain saw; refer to Before Using the Chain Saw (page 11)

   .
2. To ensure that oil is flowing to the chain, point the nose of the chain saw a few inches from a surface (e.g. paper, cardboard, a stump) and run the chain saw; you should be able to see a light spray of oil on the surface (Figure 29).

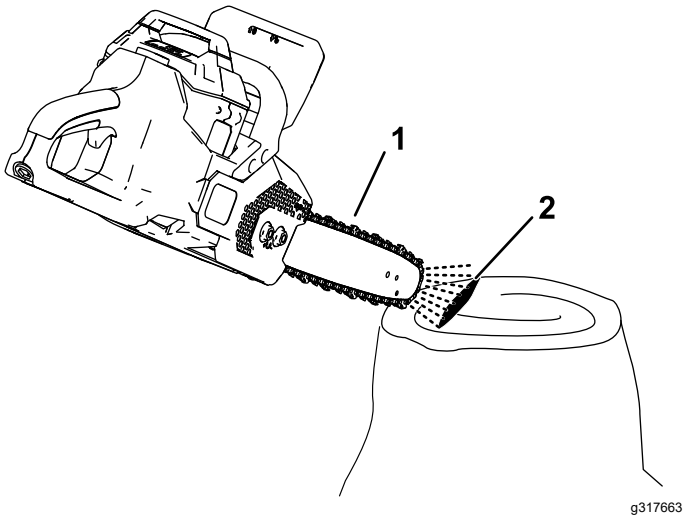

Figure 29

1. Run the chain saw a few inches from a surface.
2. If the oil is flowing, it will spray off the chain and accumulate.

3. If oil is not flowing, ensure that there is oil in the tank and that the area under the side cover is clean; refer to Checking the Oil Level and Adding Bar and Chain Oil (page 20) and Servicing the Guide Bar, Chain, and Drive Sprocket (page 23).

Adjusting the Chain Tension

Service Interval: Before each use or daily

After each battery drain cycle

Ensure that the chain is properly tensioned.

A loose chain shortens the life of the drive sprocket and the guide bar and may cause the chain to fall off.

An overtightened chain overheats the guide bar and chain, causing rapid wear, and may burn out the motor or break the chain.

The chain tension is correct when you are able to use a gloved hand to pull the chain smoothly around the guide bar. The chain should remain in contact with the bottom edge of the guide bar.

Also, check the chain tension of a new chain after a few cuts; a new chain usually stretches and requires adjustment after a few cuts.

⚠ DANGER

Contact with the chain saw teeth can cause serious personal injury.

- **Remove the battery pack before adjusting or maintaining the chain saw.**
- **Always wear gloves when adjusting or maintaining the chain saw.**

1. Place the chain saw on a level surface and remove the battery pack; refer to Removing the Battery Pack (page 18).
2. Allow the saw chain to cool.

   Important: **Do not tension a hot chain; it may contract as it cools, resulting in an overtightened chain.**
3. Inspect the guide bar for bends or damage, replace if necessary.
4. Ensure that the chain brake is in the OPERATING position (Figure 28).
5. Using the onboard multitool, loosen the captive nuts on the side cover, but do not remove it (Figure 31).
6. Hold up the tip of the guide bar (Figure 30).

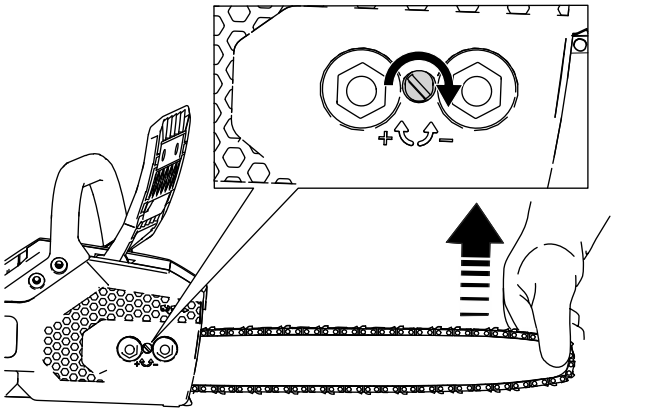

Figure 30

7. Using the onboard multitool, adjust the chain tension, and then secure the side cover to the chain saw by tightening the captive nuts (Figure 31).
   - **To tighten the chain,** turn the chain tensioning screw clockwise (Figure 30).
   - **To loosen the chain,** turn the chain tensioning screw counterclockwise

   Adjust the chain tension until the chain touches the bottom edge of the guide bar, then pull the chain away from the bottom edge of the guide bar; a properly adjusted chain can only be pulled 3.2 to 6.4 mm (1/8 to 1/4 inch) away from the guide bar, and snaps back on release.

   If the chain is not properly tensioned, loosen the side cover and repeat steps 5 through 7.
8. Use a gloved hand to pull the chain around the guide bar. A properly tensioned chain should move smoothly and remain in contact with the bottom edge of the guide bar.
9. Check the chain tension again and repeat this procedure if necessary.

Servicing the Guide Bar, Chain, and Drive Sprocket

Yearly or before storage

⚠ DANGER

Contact with the chain saw teeth can cause serious personal injury.

- **Remove the battery pack before adjusting or maintaining the chain saw.**
- **Always wear gloves when adjusting or maintaining the chain saw.**

1. Place the chain saw on a flat surface and remove the battery pack; refer to Removing the Battery Pack (page 18).
2. Remove the side cover by loosening the 2 captive nuts that secure the cover (Figure 31).

   Note: The captive nuts do not separate from the side cover; loosen them until the cover can be removed.

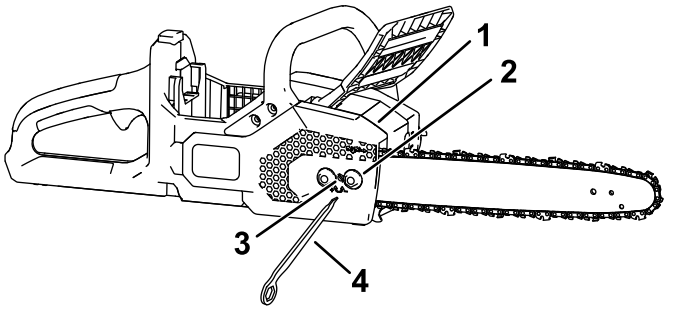

Figure 31

1. Cover
2. Captive nut
3. Chain tensioning screw
4. Multitool

3. Loosen the chain by turning the chain-tightening screw counterclockwise (Figure 31).
4. Separate the chain from the guide bar and set them aside.
5. Remove the clip and drive sprocket from the chain saw (Figure 32).
6. Clean any debris from the area under the side cover.
7. Inspect the drive sprocket; if it is excessively worn or damaged, replace it.
8. Install the drive sprocket and clip.
9. Check the oil outlet (Figure 32) for debris and clean the area if necessary.

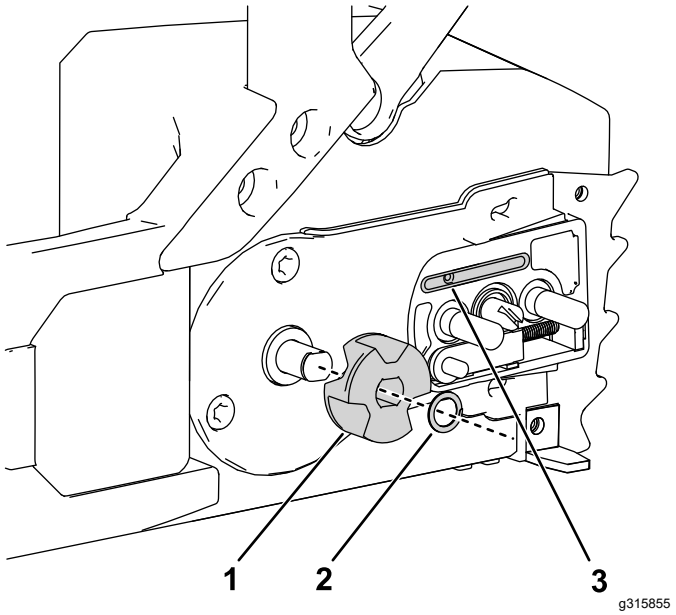

Figure 32

1. Drive sprocket
2. Clip
3. Oil outlet

10. Clean the guide bar and chain; use a wire or a small flat-head screwdriver to remove dirt and debris from the groove along the edge of the guide bar, starting from the sprocket on the front end and moving rearward.

    Ensure that the oil channel in the bar that aligns with the oil outlet on the chain saw is clean so that oil can flow freely to the chain (Figure 33).



Figure 33

Internal sections of the guide bar shown

1. Ensure that this channel connecting to the oil outlet is clean.
2. Ensure that the bar sprocket is clean and rotates freely.

11. Inspect the guide bar and chain; if the bar is bent, the grooves are damaged, or if the sprocket on the front end does not rotate freely, replace the guide bar; if the chain is excessively worn or damaged, replace it.
12. Install the guide bar and chain; refer to Installing the Guide Bar and Chain (page 24).
13. Ensure that oil is flowing to the chain; refer to Checking the Flow of Bar and Chain Oil (page 21).

Installing the Guide Bar and Chain

⚠ DANGER

Contact with the chain saw teeth can cause serious personal injury.

- **Remove the battery pack before adjusting or maintaining the chain saw.**
- **Always wear gloves when adjusting or maintaining the chain saw.**

1. If the side cover is installed to the machine, loosen the 2 captive nuts securing the side cover to the machine and remove it (A and B of Figure 34).
2. Place the chain around the drive sprocket on the front end of the guide bar, **with the cutting edge of the chain teeth on the top of the bar facing forward** as shown in the diagram on the side cover of the chain saw (C of Figure 34).

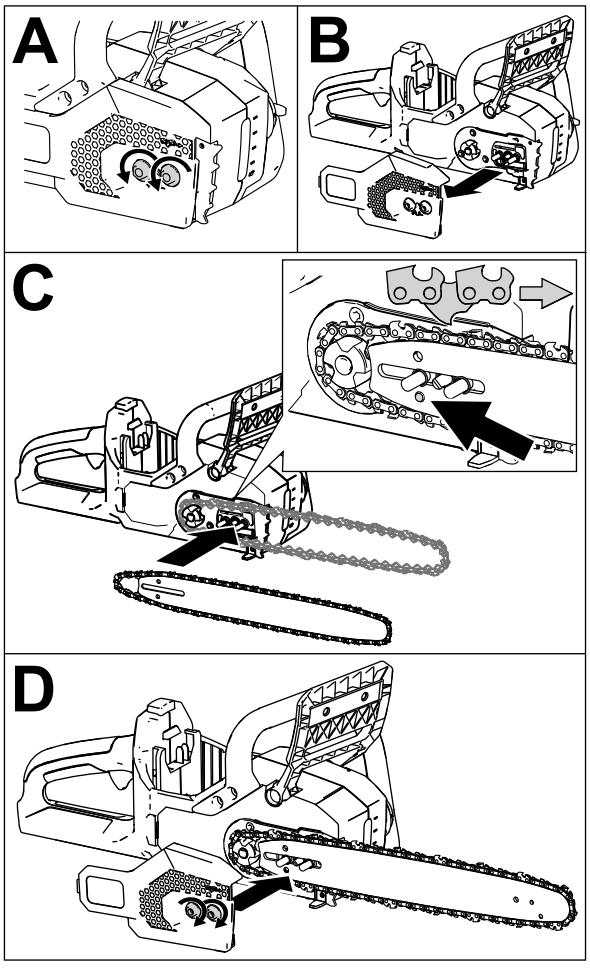

g315857

Figure 34

3. Feed the chain around the guide bar and align the chain into the groove of the guide bar.

   Note: If you are installing a new chain, flip the guide bar to avoid uneven wear.
4. Position the open loop of the chain (not on the guide bar) around the drive sprocket on the chain saw and install the guide bar and attached chain onto the chain saw as shown in C of Figure 34.

   Important: **Ensure that the chain adjusting stud is inserted into the hole indicated by the arrow in C of Figure 34. You may need to rotate the chain tensioning knob to fit the stud into the hole in the guide bar.**
5. Install the side cover, but do not fully tighten the captive nuts (D of Figure 34).
6. Adjust the chain tension; refer to Adjusting the Chain Tension (page 22).

Sharpening the Chain

Yearly or before storage

A sharp chain ensures better cutting performance and longer battery life.

The chain needs to be sharpened or replaced if you must force it onto the wood, or if it produces sawdust instead of full wood chips.

Contact an Authorized Service Dealer to have the chain sharpened or replaced.

Service

Should the chain saw need service, take the tool to your Authorized Service Dealer.

Storage

Important: **Store the machine, battery pack, and charger only in temperatures that are within the appropriate range; refer to Specifications (page 11).**

Important: **If you are storing the battery pack for the off-season, charge it until 1 or 2 LED indicators turn green on the battery. Do not store a fully charged or fully depleted battery. When you are ready to use the machine again, charge the battery pack until the left indicator light turns green on the charger or all 4 LED indicators turn green on the battery.**

- Disconnect the machine from the power supply (i.e., remove the battery pack) and check for damage after use.
- Clean all foreign material from the machine.
- Do not store a machine or charger with a battery pack installed.
- When not in use, store the machine, battery pack, and battery charger out of the reach of children.
- Keep the machine, battery pack, and battery charger away from corrosive agents such as garden chemicals and de-icing salts.
- To reduce the risk of serious personal injury, do not store the battery pack outside or in vehicles.
- Store the machine, battery pack, and battery charger in an enclosed clean, dry area.

Preparing the Battery Pack for Recycling

Important: **Upon removal, cover the terminals of the battery pack with heavy-duty adhesive tape. Do not attempt to destroy or disassemble the battery pack or remove any of its components.**

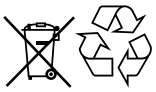

Contact your local municipality or your authorized Authorized Service Dealer or distributor for more information on how to responsibly recycle the battery.

	Lithium-ion battery packs labeled with the Call2Recycle seal can be recycled at any participating retailer or battery recycling facility in the Call2Recycle program (US and Canada only). To locate a participating retailer or facility closest to you, please call 1-800-822-8837 or visit www.call2recycle.org.
	Lithium-ion battery packs labeled with the High Energy Battery (HEB) seal shown here, and any 60V Flex-Force batteries 6.0 Ah or greater, can be recycled at any participating dealer or retailer in the Call2Recycle HEB program. To locate a participating dealer or retailer closest to you, please visit www.hebattery.org.

If you cannot locate a participating retailer or facility nearby, or have questions about which recycling program your battery pack may qualify for, please visit the customer support site listed in the operator's manual for your tool/equipment for more information on how to responsibly recycle the battery pack.

If you are located outside of the US and Canada, please contact your Authorized Service Dealer or distributor for more information on how to responsibly recycle the battery pack.

Troubleshooting

Perform only the steps described in these instructions. All further inspection, maintenance, and repair work must be performed by an authorized service center or a similarly qualified specialist if you cannot solve the problem yourself.

Always remove the battery from the tool when troubleshooting, inspecting, maintaining, or cleaning the tool.

Problem	Possible Cause	Corrective Action
The chain saw does not run or does not run continuously.	1. The battery pack is low on charge. 2. The battery pack is not fully seated. 3. The battery pack is over or under the appropriate temperature range. 4. The battery pack has exceeded high amperage limits. 5. There is moisture on the leads of the battery pack. 6. The chain brake is engaged. 7. There is debris under the cover.	1. Charge the battery pack. 2. Ensure that the battery pack is inserted all the way into the housing. 3. Move the battery pack to a place where it is dry and the temperature is between 5°C (41°F) and 40°C (104°F). 4. Release the trigger, then press the trigger switch. 5. Allow the battery pack to dry or wipe it dry. 6. Disengage the chain brake by moving the chain brake rearward. 7. Remove the cover and clean out any debris.
The chain saw runs, but the chain does not rotate.	1. The chain is not properly seated on the drive sprocket. 2. There is debris under the cover.	1. Install the chain and ensure that the links are properly seated in the drive sprocket. 2. Remove the cover and clean out any debris.
The chain brake does not engage.	1. The chain brake is damaged.	1. Immediately take the chain saw to a Authorized Service Dealer.
The chain saw does not properly cut.	1. The chain is not tensioned correctly. 2. The chain is dull or damaged. 3. The guide bar is bent or the grooves are damaged. 4. The chain is installed backward. 5. The chain is not being lubricated properly.	1. Set the proper tension on the chain. 2. Replace the chain. 3. Replace the guide bar 4. Install the chain correctly. 5. Check the oil level and ensure that oil is flowing to the chain.
The chain oil is not lubricating properly.	1. The oil level is low. 2. The oil outlet is plugged. 3. There is debris under the cover. 4. The oil channel or groove in the guide bar is plugged.	1. Check the oil level. 2. Clean out debris from the oil outlet. 3. Remove the cover and clean out any debris. 4. Clean out debris in the bar.
The battery pack loses charge quickly.	1. The battery pack is over or under the appropriate temperature range. 2. The chain is dull or damaged. 3. The guide bar is bent or the grooves are damaged. 4. The machine is overloaded. 5. The chain is not being lubricated properly.	1. Move the battery pack to a place where it is dry and the temperature is between 5°C (41°F) and 40°C (104°F). 2. Replace the chain. 3. Replace the guide bar 4. Apply less pressure when cutting. 5. Check the oil level and ensure that oil is flowing to the chain.

Problem	Possible Cause	Corrective Action
The battery charger is not working.	1. The battery charger is over or under the appropriate temperature range.	1. Unplug the battery charger and move it to a place where it is dry and the temperature is between 5°C (41°F) and 40°C (104°F).
	2. The outlet that the battery charger is plugged into does not have power.	2. Contact your licensed electrician to repair the outlet.
The LED indicator light on the battery charger is red.	1. The battery charger and/or battery pack is over or under the appropriate temperature range.	1. Unplug the battery charger and move the battery charger and battery pack to a place where it is dry and the temperature is between 5°C (41°F) and 40°C (104°F).
The LED indicator light on the battery charger is blinking red.	1. There is an error in the communication between the battery pack and the charger.	1. Remove the battery pack from the battery charger, unplug the battery charger from the outlet, and wait 10 seconds. Plug the battery charger into the outlet again and place the battery pack on the battery charger. If the LED indicator light on the battery charger is still blinking red, repeat this procedure again. If the LED indicator light on the battery charger is still blinking red after 2 attempts, properly dispose of the battery pack at a battery recycling facility.
	2. The battery pack is weak.	2. Contact your authorized service dealer if the battery is in warranty, or properly dispose of the battery pack at a battery recycling facility.

California Proposition 65 Warning Information

What is this warning?

You may see a product for sale that has a warning label like the following:



WARNING: Cancer and Reproductive Harm—www.p65Warnings.ca.gov.

What is Prop 65?

Prop 65 applies to any company operating in California, selling products in California, or manufacturing products that may be sold in or brought into California. It mandates that the Governor of California maintain and publish a list of chemicals known to cause cancer, birth defects, and/or other reproductive harm. The list, which is updated annually, includes hundreds of chemicals found in many everyday items. The purpose of Prop 65 is to inform the public about exposure to these chemicals.

Prop 65 does not ban the sale of products containing these chemicals but instead requires warnings on any product, product packaging, or literature with the product. Moreover, a Prop 65 warning does not mean that a product is in violation of any product safety standards or requirements. In fact, the California government has clarified that a Prop 65 warning "is not the same as a regulatory decision that a product is 'safe' or 'unsafe.'" Many of these chemicals have been used in everyday products for years without documented harm. For more information, go to https://oag.ca.gov/prop65/faqs-view-all.

A Prop 65 warning means that a company has either (1) evaluated the exposure and has concluded that it exceeds the "no significant risk level"; or (2) has chosen to provide a warning based on its understanding about the presence of a listed chemical without attempting to evaluate the exposure.

Does this law apply everywhere?

Prop 65 warnings are required under California law only. These warnings are seen throughout California in a wide range of settings, including but not limited to restaurants, grocery stores, hotels, schools, and hospitals, and on a wide variety of products. Additionally, some online and mail order retailers provide Prop 65 warnings on their websites or in catalogs.

How do the California warnings compare to federal limits?

Prop 65 standards are often more stringent than federal and international standards. There are various substances that require a Prop 65 warning at levels that are far lower than federal action limits. For example, the Prop 65 standard for warnings for lead is 0.5 µg/day, which is well below the federal and international standards.

Why don't all similar products carry the warning?

- Products sold in California require Prop 65 labelling while similar products sold elsewhere do not.
- A company involved in a Prop 65 lawsuit reaching a settlement may be required to use Prop 65 warnings for its products, but other companies making similar products may have no such requirement.
- The enforcement of Prop 65 is inconsistent.
- Companies may elect not to provide warnings because they conclude that they are not required to do so under Prop 65; a lack of warnings for a product does not mean that the product is free of listed chemicals at similar levels.

Why does Toro include this warning?

Toro has chosen to provide consumers with as much information as possible so that they can make informed decisions about the products they buy and use. Toro provides warnings in certain cases based on its knowledge of the presence of one or more listed chemicals without evaluating the level of exposure, as not all the listed chemicals provide exposure limit requirements. While the exposure from Toro products may be negligible or well within the "no significant risk" range, out of an abundance of caution, Toro has elected to provide the Prop 65 warnings. Moreover, if Toro does not provide these warnings, it could be sued by the State of California or by private parties seeking to enforce Prop 65 and subject to substantial penalties.