PR-D5

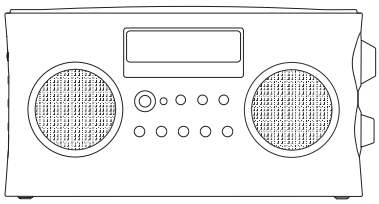

GB

Version 1

Important safety instructions

1. Read and understand all safety and operating instructions before the radio is operated.

2. Retain instruction: The safety and operating instructions should be retained for future reference.

3. Heed warnings. All warnings on the appliance and operating instructions should be followed.

4. Follow all operations and use instructions.

5. Water and moisture: The appliance should not be used near water. Do not use near a bathtub, washbowl, laundry tub, kitchen sink, wet basement, swimming pool, etc.

6. Unplug the radio from the AC power outlet before cleaning. Use only a damp cloth for cleaning the exterior of the radio.

7. Do not place the radio on an unstable cart, stand, bracket or table. The radio may fall, causing serious personal injury and damage to the radio.

8. Ventilation: This radio should be situated so that its location or position does not interfere with its proper ventilation. For example, the radio should not be used on a bed, sofa, rug or other soft surfaces that may block the ventilation openings. It should not be placed in a built-in situation like a cabinet that may reduce air flow through the ventilation openings.

9. Power sources: The radio should be operated only from the type of power source indicated on the marking label. If you are not sure of the type of power supply to your home, consult your radio dealer or power company.

10. Power cords: The power cord should be positioned so it is not walked on, pinched, or items placed on top of it. Pay particular attention to cords at plugs, convenience receptacles, and the point where they exit from the unit. Unplug the power cord by gripping the power plug, not the cord. Operate the radio using only the current type of power source indicated. If you are not sure of the type of power supply to your home, consult your dealer or local power company.

11. Do not overload wall outlets or extension cords. This can result in a risk of fire or electrical shock. Never insert objects of any kind into the radio through opening. The objects may touch dangerous voltage points or short out parts. This could cause a fire or electrical shock.

12. If the radio is left attended and unused for long periods of time, unplug it form the wall outlet. This will prevent damage caused by lightning or power line surges.

13. If the radio is left unattended and unused for a long period of time, remove the batteries. The batteries may leak and damage furniture of your radio.

14. Do not attempt to service the receiver yourself. Removing the cover may expose you to dangerous voltage, and will void the warranty. Refer all servicing to authorized service personnel.

15. Object and Liquid Entry-Never push objects of any kind into this radio through opening as they may touch dangerous voltage points or short-out parts that could result in a fire or electric shock. Never spill liquid of any kind of product.

GB

16. The appliance should be serviced by qualified service personnel when:
    A. The power supply cord or the plug has been damaged.
    B. Objects have fallen or liquid had been spilled into the radio.
    C. The radio has been exposed to rain or water.
    D. The radio does not appear to operate normally or exhibits a marked change in performance.
    E. The radio has been dropped, or the enclosure damaged.

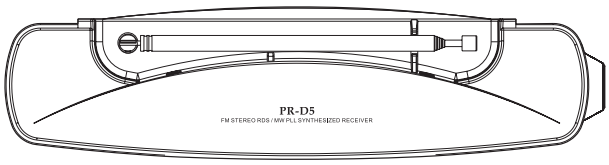
PR-D5
FM STEREO RDS / MW PLL SYNTHESIZED RECEIVER

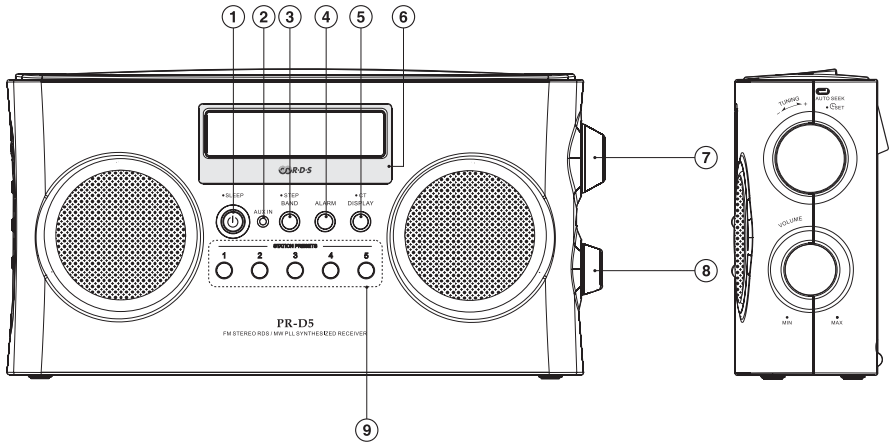
1
2
3
4
5
6
7
8
9
SLEEP
AUX IN
STEP BAND
ALARM
SET DISPLAY
STATION PRESETS
1
2
3
4
5
PR-D5
FM STEREO RDS / MW PLL SYNTHESIZED RECEIVER
TUNING
AUTO SEEK
VOLUME
MIN
MAX

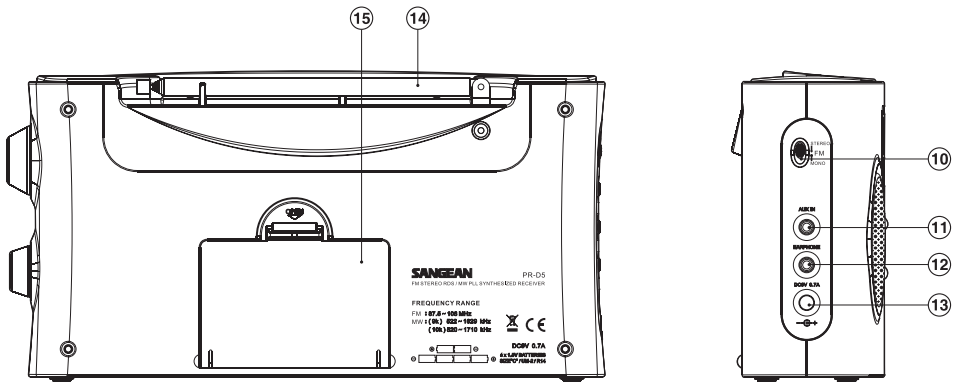
15
14
10
11
12
13
SANGEAN
PR-D5
FM STEREO RDS / MW PLL SYNTHESIZED RECEIVER
FREQUENCY RANGE
FM 87.5 – 108 MHz
MW 1 (9k) 522 – 1620 kHz
(10k) 520 – 1710 kHz
DC5V 0.7A
STEREO
FM
MONO
AUX IN
HARPHONE
DC5V 0.7A

Controls

① Power button
② AUX In signal
③ Band and Tuning step selection
④ Alarm set
⑤ CT Display
⑥ LCD display
⑦ Tuning/SET/AUTO SEEK knob
⑧ Volume Control
⑨ Preset buttons
⑩ FM Stereo/Mono switch
⑪ AUX IN socket
⑫ Earphone socket
⑬ DC input socket
⑭ Antenna
⑮ Battery compartment

LCD Display

Ⓐ Battery power
Ⓑ Stereo display
Ⓒ RDS display
Ⓓ Sleep and snooze status
Ⓔ Time set
Ⓕ Alarm display
Ⓖ Digital display

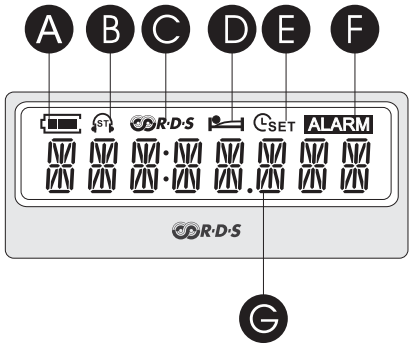

GB

Setting the clock

1. Clock can be set either the radio is power on or off.
2. Press the SET knob (on the side of the radio) for more than 2 seconds, display will flash time set symbol SET and also the hour digits, followed by a beep.
3. Rotate the SET knob to set the required hours.
4. Press the SET knob, the minute digits will flash.
5. Rotate the SET knob to set the required minute.
6. Press the SET knob to complete time setting.
   Or press POWER.

Operating the radio

Tuning the radio

1. Press the Power button to turn on the radio.
2. Select the required waveband by pressing the Band button.
   There are 3 bands which are FM, AM and AUX-IN.
3. Rotate the Tuning knob to the desired frequency, shown in the display.
4. Or, press the TUNING button to seek for the next available station.
5. Rotate the Volume knob (on the side of the radio) to get required sound level.
6. To turn off the radio, press the Power button.

Storing station presets

There are 5 memory presets for each waveband –
STATION PRESETS 1 to 5.

1. Press the Power button to turn on the radio.
2. Tune to required station using one of the methods previously described.
3. Press and hold the required preset until the radio beeps. The preset number will appear in the display (such as: M 1) and the station will be stored under chosen preset button.
4. Repeat this procedure for the remaining presets.
5. Stations stored in preset memories can be overwritten by following above procedures.

Recalling stations presets

1. Press the Power button to turn on the radio.
2. Select the required waveband.
3. Momentarily press the required Preset button, the preset number and station frequency will appear in the display.

RDS function

This function only applies when FM station which is listening provides the RDS service.

GB

1. When FM station provides RDS service, R·D·S shows on the display and the display shows the program type and then shows the radio text if radio text is provided.
2. Press and hold CT button for more than 2 seconds until it beeps, then the radio clock time will be automatically corrected. When it shows “No CT” means there is no service.

AUX IN

1. Turn on the radio, and press the STEP/BAND button until “AUX” is displayed.
2. Connect a stereo or mono audio source (ie iPod, MP3 or CD player) to the Aux in socket on the side of the radio. And the AUX-IN light will be on.
3. Adjust the Volume control on your iPod, MP3 or CD player.

Setting the radio alarm

1. To activate the alarm, press and hold the ALARM button for more than 2 seconds and it will beep and the display will show “ALARM”.
2. To deactivate the alarm, press and hold the ALARM button for more than 2 seconds and it will beep and the “ALARM” will disappear from the display.

When the radio alarm is selected, the radio will turn on and play the last played radio station at the chosen alarm time. (If it is under AUX band, or the battery is low, then the alarm will sound by buzzer). The radio alarm will continue for one hour unless turned off by pressing the Power button.

Setting radio alarm time

The alarm time may be set after the clock time is set. The alarm can be set either radio is on or off.

1. Press the ALARM button, the radio alarm symbol will flash, and the alarm time is shown.
2. During radio alarm flashing, press the SET knob for more than 2 seconds followed by a beep tone, and the hour digits will flash.
3. Rotate the SET knob to select the hour then press the SET knob to confirm hour setting, and the minute digits will flash.
4. Rotate the SET knob to select the minute then press the SET knob to finish setting.
5. Tune into the desired radio station and adjust the volume for the alarm, and turn off the radio.
6. While the alarm is sounding, press the POWER button to stop it.

Sleep function

The sleep timer switches off the radio after a preset time has elapsed.

1. Press and continue to hold down the Power button for more than 2 seconds, followed by beep tone, the display will cycle through the available sleep times in the order 60-45-30-15-120-90-60. Release the Power button when the required sleep time appears on the display. The symbol will appear on the display and the radio will play the last station selected.
2. To cancel the sleep function, press the POWER button, and the symbol will disappear and radio is off.

GB

Setting tuning step

Why setting tuning step?
There are different tuning steps for different countries. If you buy the radio in Europe and intend to use it in America, includes Latin America, the tuning step should be switched.

1. When radio is off, long press the STEP/BAND button until it beeps and “24 HOUR” flashes. Then rotate the TUNING knob to switch 24/12 hour system.
2. Press the STEP/BAND button and then rotate the TUNING knob to switch MW (AM) step which is MW 9KHz or MW 10 KHz. (10K for America and 9K for most other countries)
3. Press the STEP/BAND button to finish the setting.

Note:
After the tuning step is switched, AM station presets are erased.

FM Stereo/Mono mode

1. FM Stereo/Mono mode switch is on the side of the radio.
2. When FM signal is weak, some hiss may be audible. To reduce the hiss, switch the Stereo/Mono to Mono mode.

Headphone socket

A 3.5mm headphone socket located on the left-hand side of your radio. That is to provide for either headphones or an earpiece. Inserting a plug automatically mutes the internal speaker.

Reset the radio

When this device been attach by static electricity, the display may show random codes (meaningless characters). To retrieve it, unplug the power and take out the batteries for more than 3 minutes, the display will be back to the normal.

Specifications

Power Requirements

AC Power adaptor	DC 9V 700mA center pin positive
Batteries	6 X UM-2 (C size)
Battery Life	Approx . 70 hours of listening for 4 hours A day at normal volume using alkaline cells
Frequency Coverage	FM 87.50 – 108 MHz AM 522 – 1629 kHz (9 kHz /step) or AM 520 – 1710 kHz (10 kHz/step)

Circuit Feature

Loudspeaker	2.5 inches 8 ohm
Output Power	800 + 800 mW
Headphone socket	3.5 m dia.
Aerial System	Telescopic aerial

GB

If at any time in the future you should need to dispose of this product please note that: Waste electrical products should not be disposed of with household waste. Please recycle where facilities exist. Check with your Local Authority or retailer for recycling advice. (Waste Electrical and Electronic Equipment Directive)