CREALITY

IMAGINE IT, MAKE IT

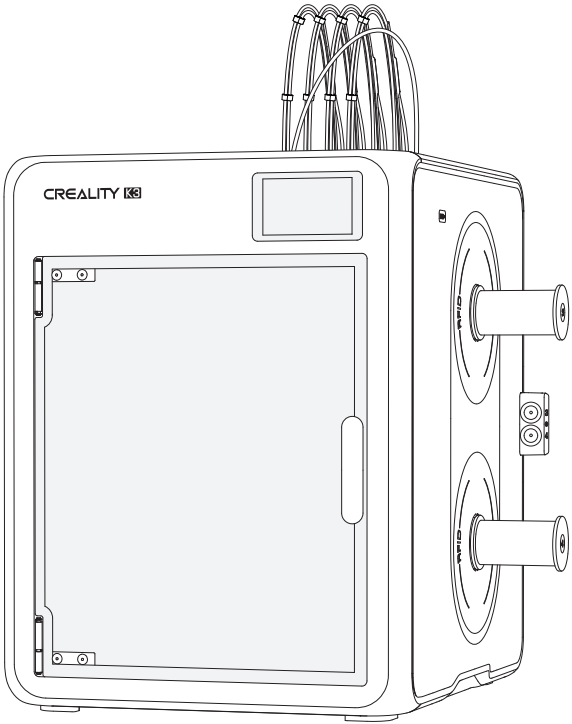

User Manual

K3 3D Printer

V 1.0_EN

K3

Dear Users

Thank you for choosing Creality products. This quick guide introduces the steps for unboxing, installation, and debugging. Please read it carefully before use. For more detailed instructions, unboxing videos, and after-sales service tutorials, please visit the Creality Wiki platform.

The Creality team is always ready to provide you with quality service. If you encounter any problems during use, please contact us through the phone number and email provided at the end of this quick guide.

Bought a product but don't know how to use it? Don't worry, all your confusions will be resolved!

Creality official Wiki

https://wiki.creality.com

- Comprehensive understanding of the new product, immersive exploration of its features.
- Detailed operation guides to help you get started effortlessly.
- Professional after-sales support platform offering efficient solutions.

Creality Cloud – Your 3D Printing Universe Awaits! Discover the all-in-one 3D printing platform designed for all enthusiasts.

Creality Cloud App

https://www.crealitycloud.com

- Access a vast library of high-quality models.
- Built-in cloud slicing and Print Settings make printing easier than ever.
- Control remotely and print with just one click, anytime, anywhere.

Safety Instructions

1. Do not use this machine in any way not described in the instructions to avoid injury or property damage.
2. Do not place the machine near flammable or explosive materials or high-heat sources. Place it in a well-ventilated, cool, and dust-free environment
3. Do not place the printer on vibrating or unstable surfaces; machine vibration can affect print quality.
4. Please use filaments recommended by Creality to avoid nozzle clogging or machine damage.
5. Do not use a power cord from another product. Use the supplied power cord, and connect it to a grounded three-prong outlet;
6. Do not touch the nozzle or heated bed while the printer is operating to avoid burns or cuts;
7. Do not wear gloves or loose items while operating the machine to avoid entanglement, crushing, or cutting injuries from moving parts;
8. After printing, clean residual filament from the nozzle with tools while it is still warm. Do not touch the nozzle directly with your hands to avoid burns;
9. Please perform regular maintenance. With the printer powered off, use a dry cloth to clean the printer body, removing dust, bonded printing material, and debris from the guide rails;
10. Children under 10 are not recommended to operate or touch this machine to avoid injury;
11. Users must comply with applicable local laws and regulations, follow professional ethics, and observe safety obligations. It is strictly prohibited to use our products or equipment for any illegal purpose. We assume no liability for any legal consequences arising from such violations;
12. Friendly reminder: Do not plug or unplug cables while the machine is powered on.
13. The full text of the EU Declaration of Conformity is available at the following internet address https://wiki.creality.com/en/euro-compliance
14. Hereby, SHENZHEN CREALITY 3D TECHNOLOGY CO., LTD declares that the radio equipment type is in compliance with Directive 2014/53/EU.

It is not allowed children to operate this produc. Only skilled person is applicable to this product.

Caution! Hot parts!
Contact may cause burns.
Please power off and wait 30 minutes before servicing.

Moving Parts: Keep Body Parts
Away From Moving Parts

Table of Contents

1. Product Information **01-05**
1.1 Product Overview 01-01
1.2 Package Contents 02-03
1.3 Product Specifications 04-05

2. Installation Guide **06-10**
2.1 Unlock the Heated Bed and Print Head 06-06
2.2 Spool Holder and Side PTFE Tube Bracket Installation 07-07
2.3 Auto Filament Loader/Unloader Installation 07-08
2.4 Nozzle and Cable Installation 09-10
2.5 PTFE Tube Installation 10-10

3. Power-on and boot-up process **12-13**
3.1 Power-on and boot-up process 12-13

4. Consumable editing/consumable loading **14-14**
4.1 Consumable editing/consumable loading 14-14

5. First print **15-19**
5.1 Creality Cloud Printing 15-16
5.2 Creality Print Slicing 17-18
5.3 USB Drive Printing 19-19

1. Product Information

1.1 Product Overview

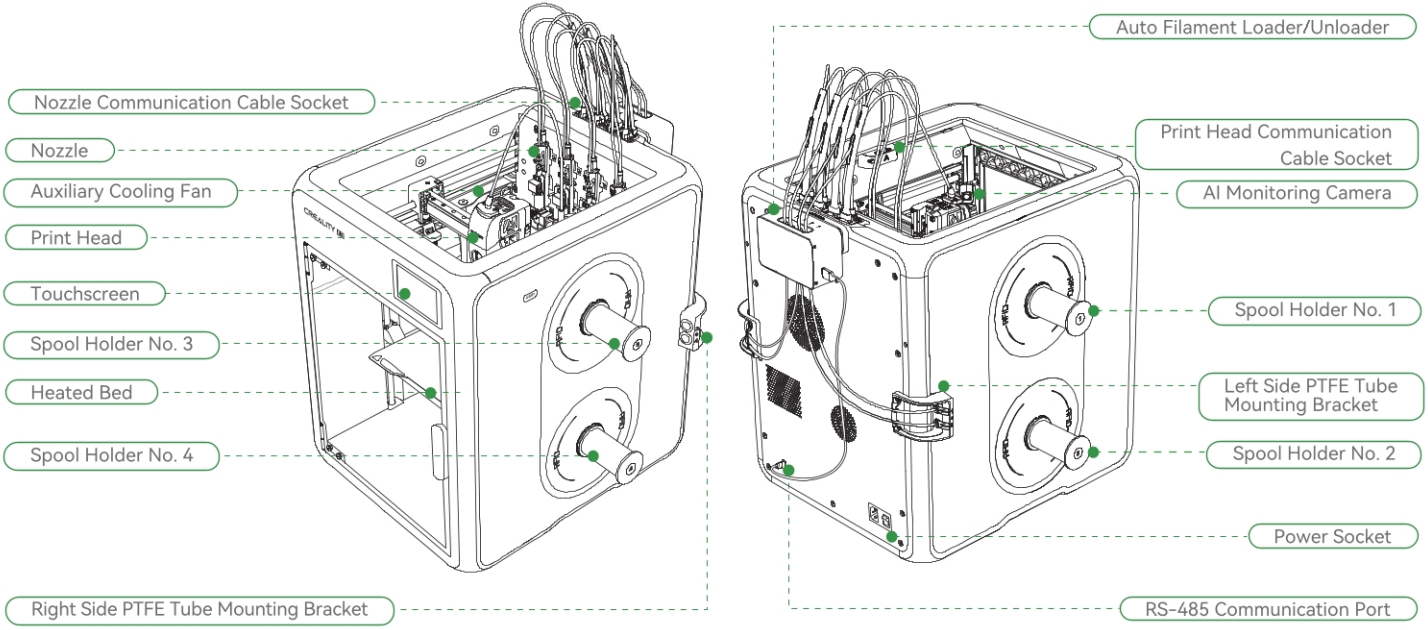

1. Product Information

1.2 Package Contents

(1) Main Unit

(2) Auto Filament Loader/Unloader

(3) Multi-Color Box Bracket

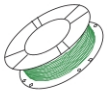

(4) 200g Filament

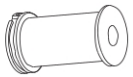

(5) Spool Holder ×4

(6) Side PTFE Tube Mounting Bracket ×2

(7) 0.4mm Nozzle Component ×4

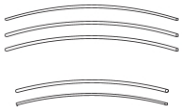

(8)Short PTFE Tube ×5 (1 spare)

(9) RS-485 Communication Cable

(10) Build Plate

(11) Power Cord

(12) Waste Tray

(13) Print Head Communication Cable

(14) Grease

(15) Creality Cloud card

(16) After-Sales Service Card

(17) Quick Start Guide

1. Product Information

Product 3D Printer
HVIN: CFS nano unit, HVIN: CFS FLX.
To meet the needs of different consumer groups, it is respectively equipped with Auto Filament Loader/ Unloader: CFS FLX and CFS nano unit. CFS FLX and CFS nano unit do not have wireless function.
CFS FLX and CFS nano unit are shown as in the right figure.

CFS FLX

CFS nano unit

1.2 Package Contents

Tool Box

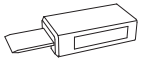			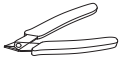	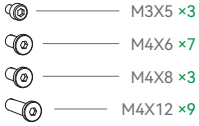	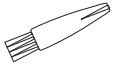
(1) Spare Toolhead Cutter	(2) Hex Key Set	(3) Nozzle Cleaning Needle	(4) Flush Cutters	(5) Screw Kit for Printer Installation	(6) Cleaning Brush

Tips: the above accessories are for reference only. Please refer to the physical accessories.

Note: All PTFE tube connectors are pneumatic fittings. Press the release ring before removing. Pulling forcefully may damage the tube.

1. Product Information

1.3 Product Specifications

Basic Specifications of K3	
Model	K3
Printing Technology	FFF
Build Volume	260*260*260mm^3
Machine Dimensions	482*420*536mm^3
Net Weight	22kg
Number of Independent Filament Channels	Four
Print Speed	≤500mm/s
Acceleration	≤20000mm/s^2
Print Accuracy	100mm±0.1mm
Print Head Type	New direct-drive dual-gear print head with swappable nozzles
Specifications of Compatible Filament	PLA、PETG、PET、PLA-CF/GF、PETG-CF/GF、TPU 95A、PCTG
Spool Compatibility	Spool outer diameter within the range of 140–202 mm, inner diameter within the range of 50–60 mm, width within the range of 40–70 mm
Filament Diameter	1.75mm
Nozzle Temperature	≤300℃
Build Plate Temperature	≤100℃
Nozzle Diameter	0.4 mm as the Standard, compatible with 0.2 / 0.6 / 0.8 mm nozzles

1. Product Information

1.3 Product Specifications

Basic Specifications of K3			
Rated Voltage	100-127V~, 200-240V~, 50/60Hz	Area Leveling	Supported
Touchscreen	3.97-Inch Capacitive Color Touchscreen	Automatic Nozzle Swap	Supported
AI Monitoring Camera	720P	Nozzle Offset Calibration	Supported
Printing Methods	USB Drive / Wi-Fi	Number of Independent Filament Channels	Supported
Internal Storage	8GB	Multi-Color Printing	Supported
WIFI	2.4GHz	Multi-Material Printing	Supported
Build Plate	PEI Spring Steel Build Plate	Power Loss Recover	Supported
Auto Filament Loading / Unloading	Supported	Auto Refill	Supported
Filament Detection	Supported	Filament Cutter	Supported
Audible Alerts	Supported	Nozzle Clog Detection	Supported
Lighting	Supported	RFID Detection	Supported
Status LED	Supported	Supported File Formats	Gcode/3MF
Vibration Compensation	Supported	Thermal Runaway Protection	Supported
High-Speed Auto Bed Leveling	Supported	Slicer Software	Creality Print 7.0及以上
Rated Power	Max Power: 350–480 W @ 100–127 V~, 950 W @ 200–240 V~ Steady Power: 150–160 W @ 100–127 V~, 160 W @ 200–240 V~		
Software Languages	中文 / English / Italiano / Français / Español / Português / Deutsch / Polski / Русский / Українська / Türkçe / Čeština / Nederlands / Magyar / Svenska / 日本語 / 한국어		

2. Installation Guide

2.1 Unlock the Heated Bed and Print Head

1. Remove the four lead screw brackets from the left and right sides by hand—two on each side. No tools required. The brackets are installed tightly; please pull firmly but carefully.

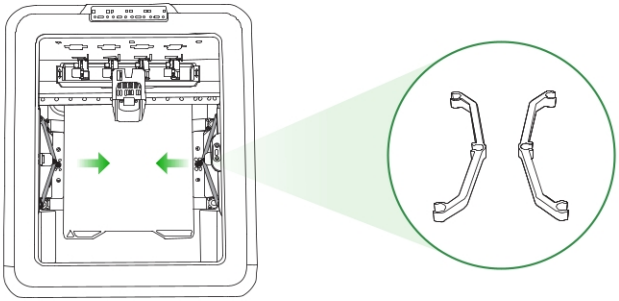

2. Use the H2.5 hex wrench to remove the four heated bed locking screws marked with green circles.

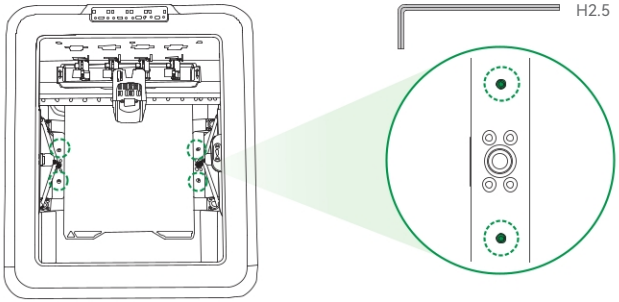

3. Remove the tape securing the waste tray and the foam under the heated bed.

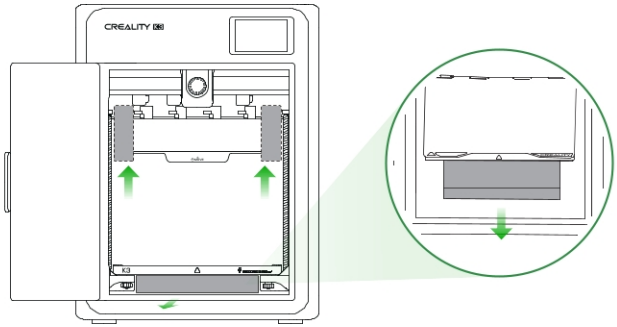

4. Unpack the build plate and place it as shown: align the top edge first. Do not touch the heated bed before alignment. Once aligned, lower it gently onto the bed.

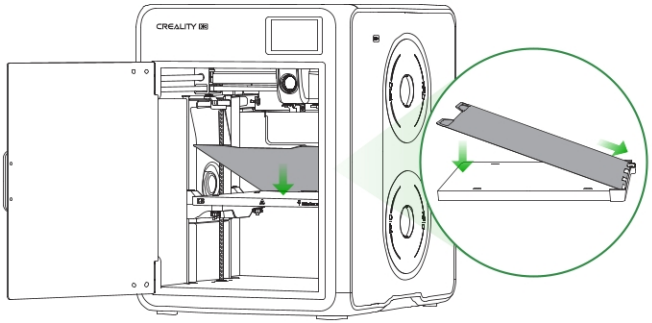

2. Installation Guide

2.2 Spool Holder and Side PTFE Tube Bracket Installation

1. Install the four spool holders on the left and right sides as shown.

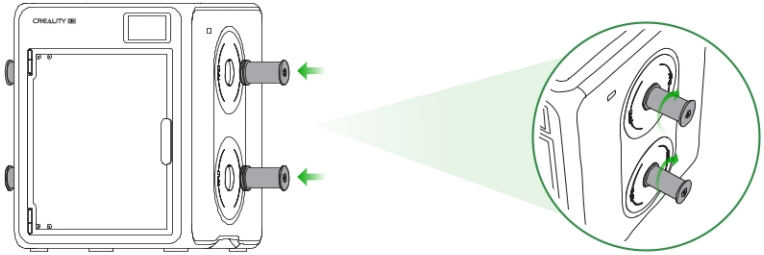

2. As shown, use the H2.5 hex wrench and four M4x6 screws from the screw kit to install the two side PTFE tube mounting brackets on the left and right sides.

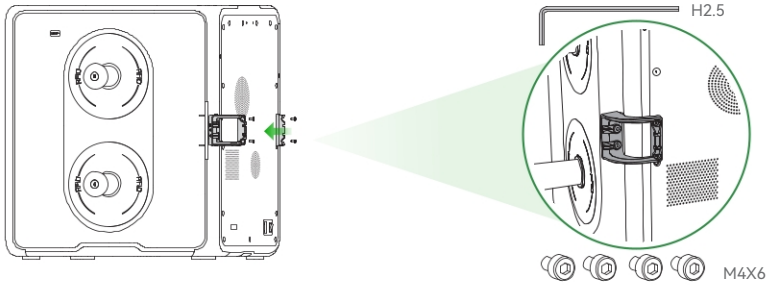

2. Installation Guide

2.3 Auto Filament Loader/Unloader Installation

1. As shown, use the H2.5 hex wrench and two M4x6 screws from the screw kit to install the multi-color box bracket in the indicated position. Place it with the Creality logo facing up

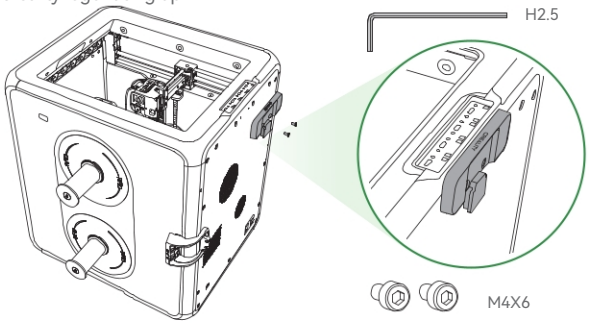

2. Insert the Auto Filament Loader/Unloader into the indicated position.

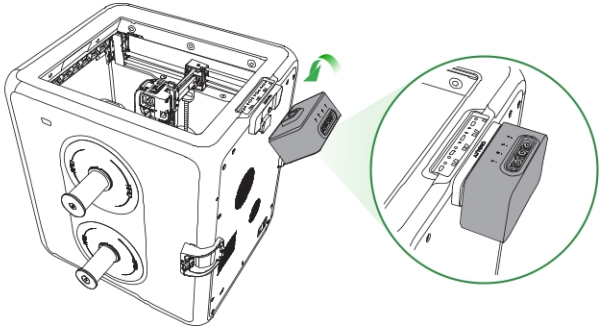

3. Connect one end of the RS-485 Communication Cable to the loader/unloader communication port, and the other end to the printer's RS-485 port.

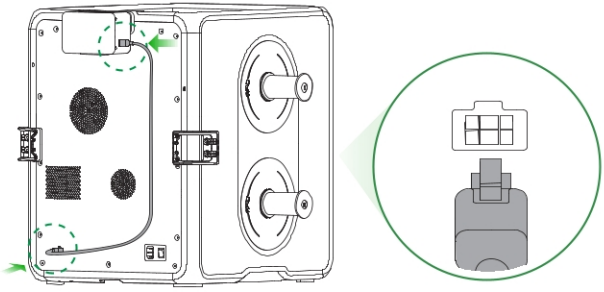

2. Installation Guide

2.4 Nozzle and Cable Installation

1. Take the Nozzle component. As shown, first mount the nozzle side onto the hotend bracket on the back plate, then connect the cable side to the Nozzle Communication Cable Socket. Secure it with two M4x12 screws from the accessory kit using the H2.5 hex wrench.

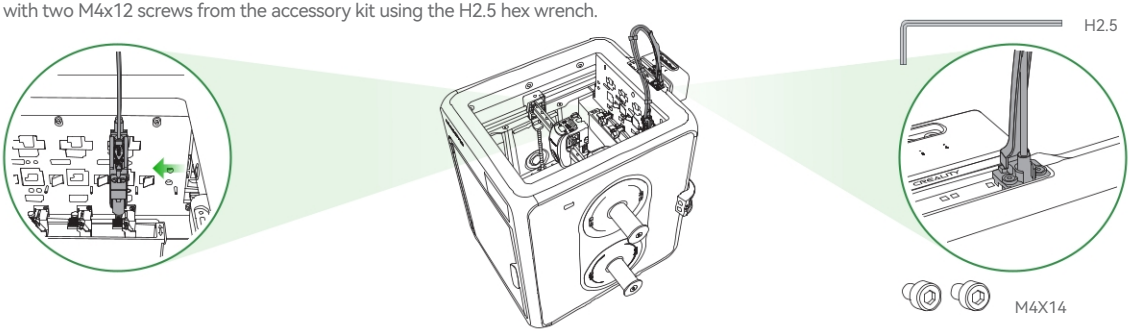

2. As shown, insert one end of the long PTFE tube into the corresponding port of the Auto Filament Loader/Unloader.

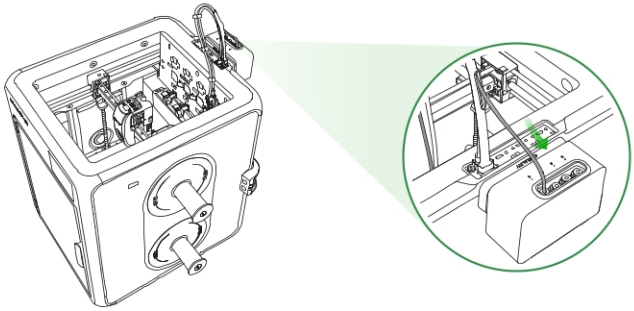

2. Installation Guide

3. Repeat the steps above to install all four nozzles and cables.

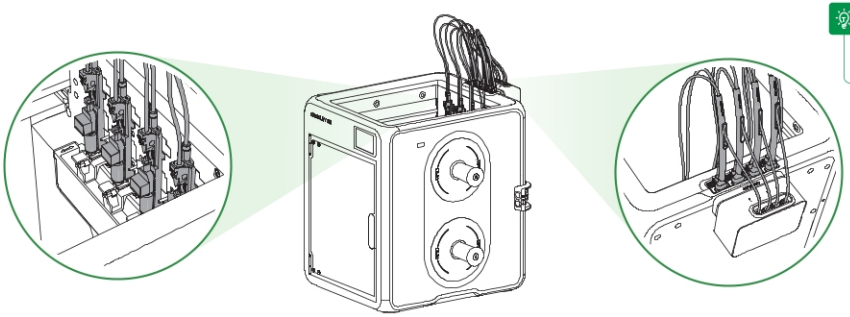

Make sure the cables and PTFE tubes are not tangled or misrouted.

4. Insert one end of the print head communication cable into the Print Head Communication Cable Socket. Secure the cable with two M3x5 screws from the accessory kit using the H2.5 hex wrench. Insert the other end into the communication cable socket on the top right side of the printer. Secure it with two M4x8 screws from the accessory kit using the H2.5 hex wrench.

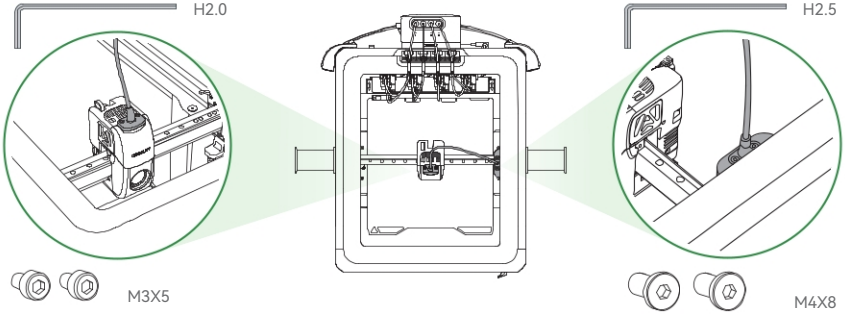

2. Installation Guide

2.5 PTFE Tube Installation

1. As shown in the connection sequence, insert one end of the short PTFE tube into the fitting on the Side PTFE Tube Mounting Bracket and press it into the tube guide. Insert the other end into the fitting below the Auto Filament Loader/Unloader.

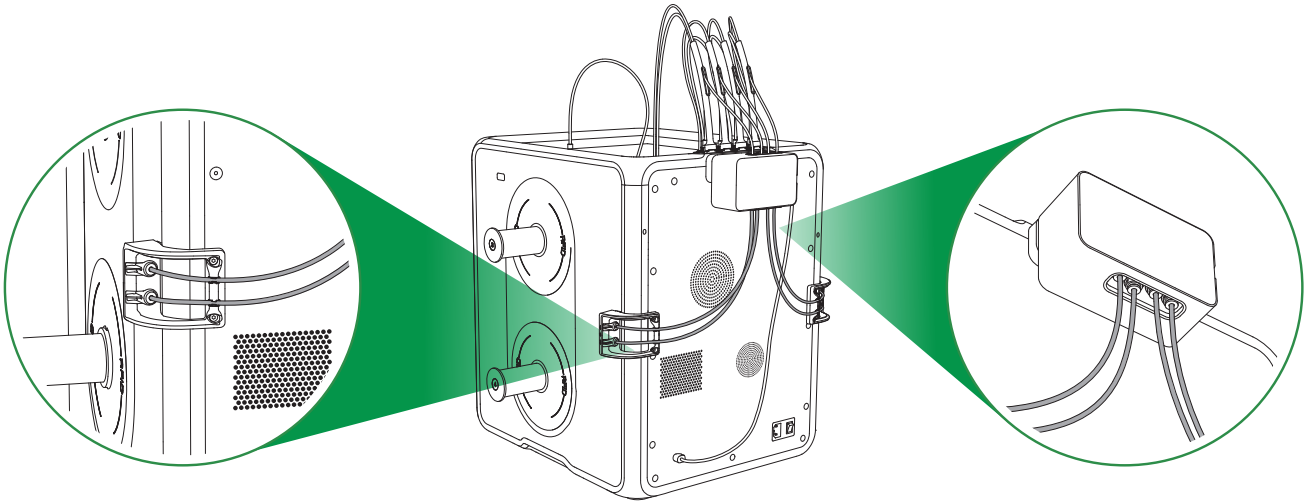

Connect according to the numbers shown in the diagram. Do not mix up the connections.

3. Power-on and boot-up process

3.1 Power-on and boot-up process

1. Insert the power cord into the power outlet, connect to the power source, and press the switch to turn on.

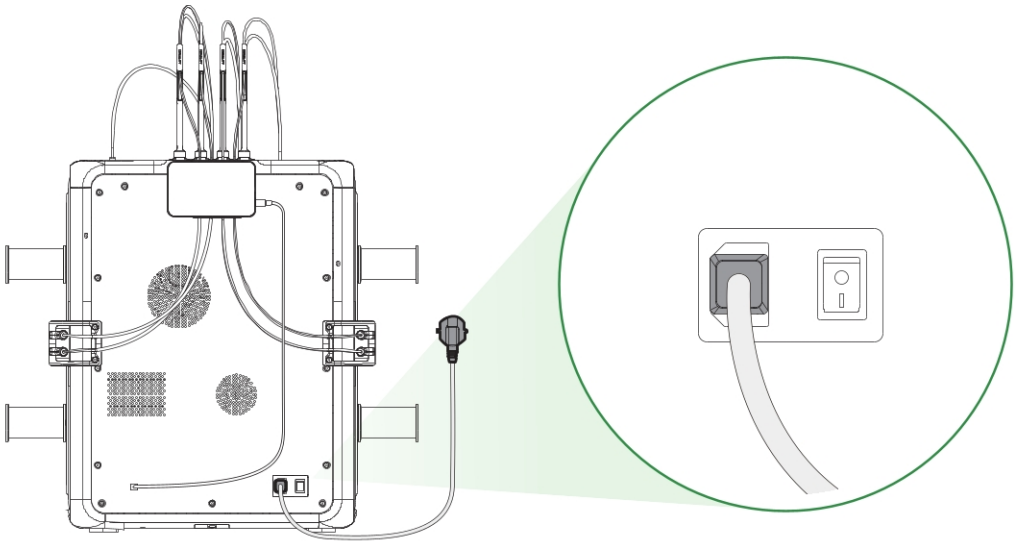

3. Power-on and boot-up process

The current interface is for reference only. Due to the continuous upgrading of functions, it shall be subject to the latest software/firmware UI published on the official website.

If any abnormalities occur during the self-check process, you can first refer to the FAQ to check the cause of the machine malfunction: or scan the QR code to perform a "fault report", and subsequently resolve the machine malfunction through after-sales service.

2. Boot up;

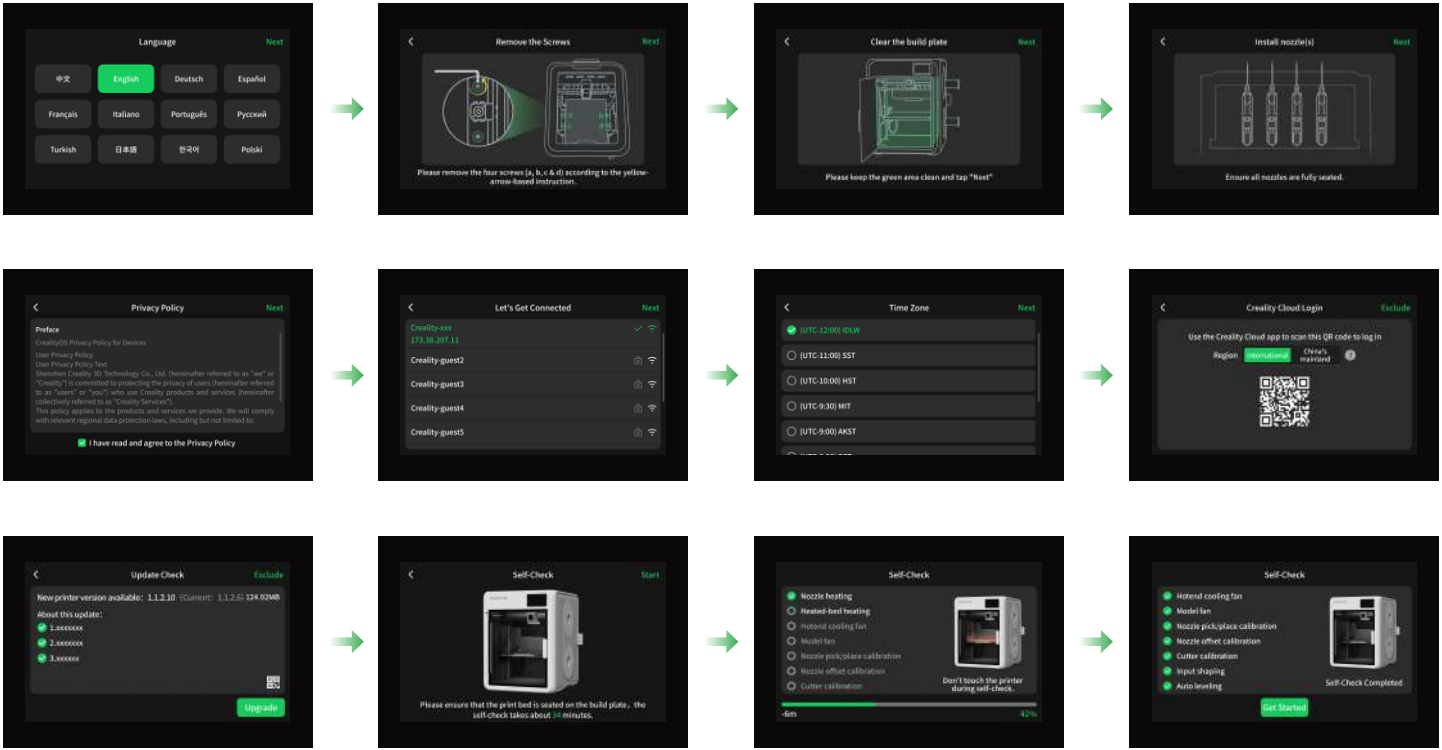

4. Consumable editing/consumable loading

4.1 Consumable editing/consumable loading

1. Hang the consumable on the rack, insert it into the Teflon tube, gently push until the consumable detection switch is triggered, and the automatic feeding and retracting device will automatically send the consumable to the set position;

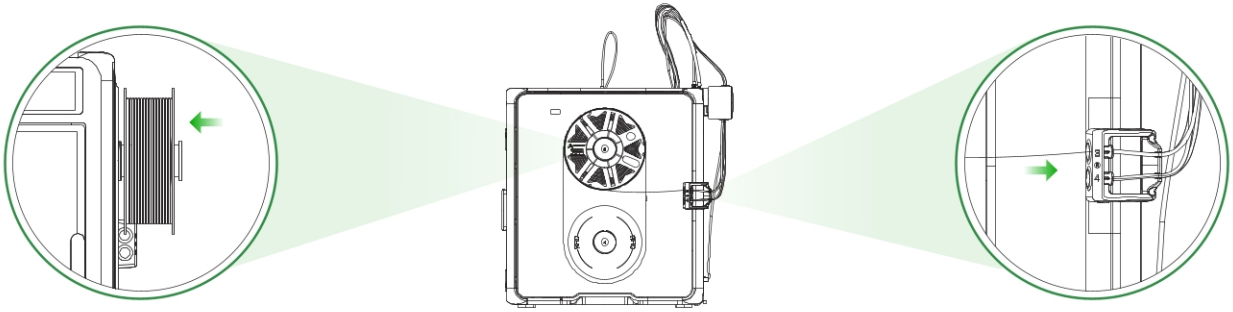

2. Manually click on the screen to set consumable information: Control page → Consumables → Edit (located below the material rack as shown in the figure), set the consumable brand, type, name, and color respectively, and finally click OK to save the settings;

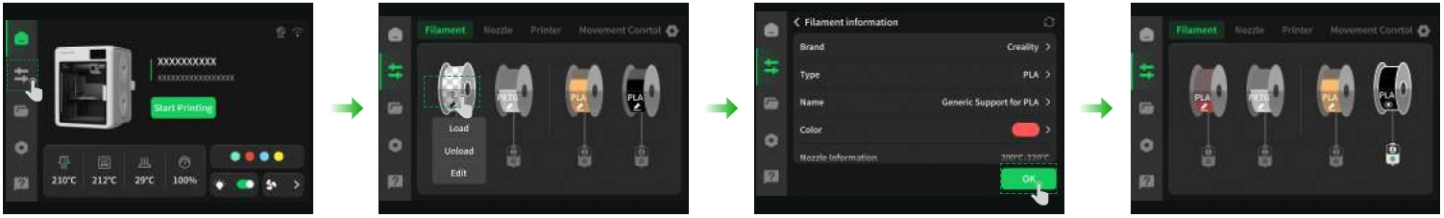

The current interface is for reference only. Due to the continuous upgrading of functions, it shall be subject to the latest software/firmware UI published on the official website.

5. First print

5.1 Creality Cloud Printing

5.1.1 Software Download and Installation

1. Method 1: Scan the QR code below to download and install the Creality Cloud app.

https://www.crealitycloud.com

- Access a vast library of high-quality models.
- Built-in cloud slicing and Print Settings make printing easier than ever.
- Control remotely and print with just one click, anytime, anywhere.

Creality Cloud App

2. Method 2: Search for "Creality Cloud" in the app store to download and install.

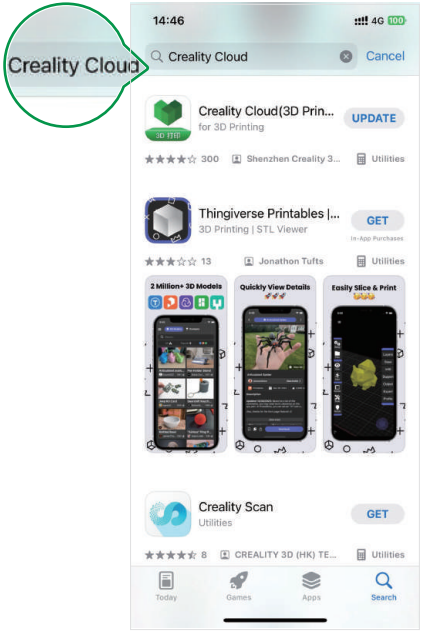

5.1.2 Bind and add a device

Use the Creality Cloud app on your mobile phone to scan the QR code on the printer screen and bind the printer to your account.

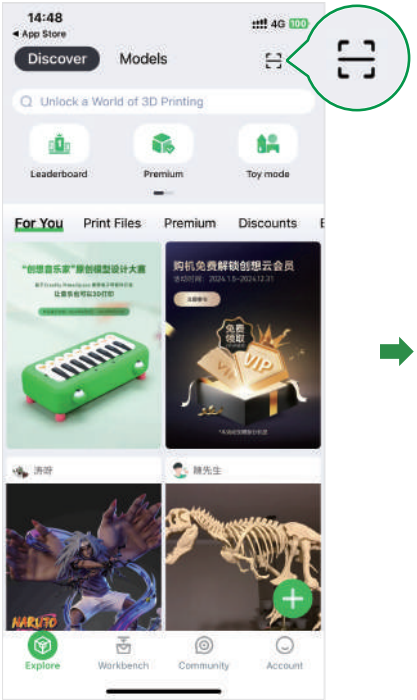

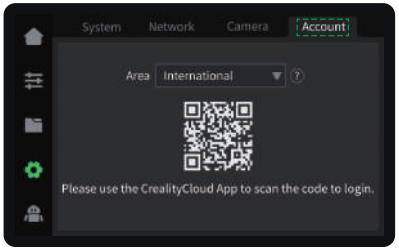

Click Settings → Account, then scan the QR code.

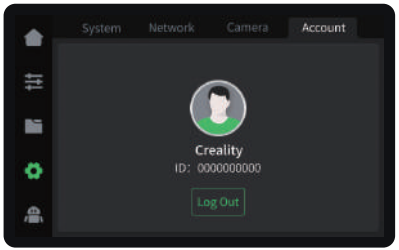

Binding successful.

5. First print

5.2 Creality Print Slicing

5.2.1 Software Download and Installation

Creality Print

Log in to the Creality Cloud website to download the latest Creality Print slicing software:
https://www.crealitycloud.com/software-firmware/software/creality-print ;

5.2.2 Bind Machine to LAN

1. Check the machine IP on the machine screen: Settings → Network.

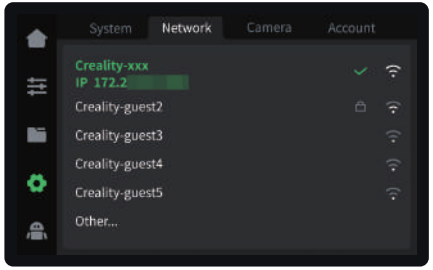

2. Enter the machine IP in the slicing software for binding: Manually add → Enter IP.

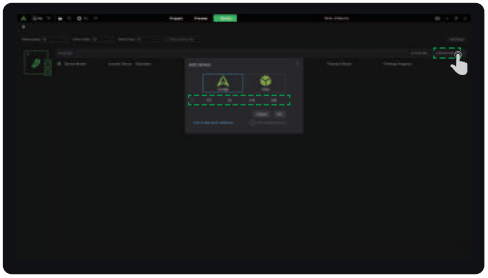

The current interface is for reference only. Due to the continuous upgrading of functions, it shall be subject to the latest software/firmware UI published on the official website.

5.2.3 Slice and Send to Print

1. Click "Slice Plate" , and after slicing is complete, click "Send Print".

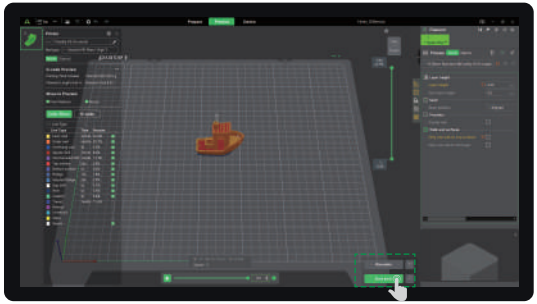

For more detailed slicing software usage tutorials, please log in to the Creality 3D official Wiki:
https://wiki.creality.com/en/software/update-released

The current interface is for reference only. Due to the continuous upgrading of functions, it shall be subject to the latest software/firmware UI published on the official website.

2. Check the machine and filament information, then click "Start Print".

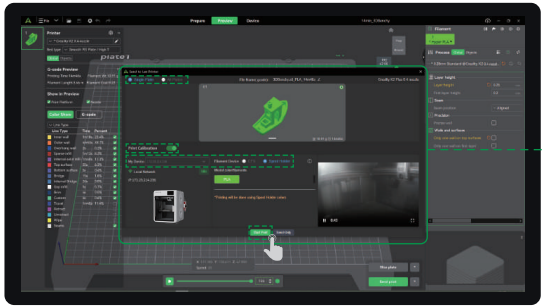

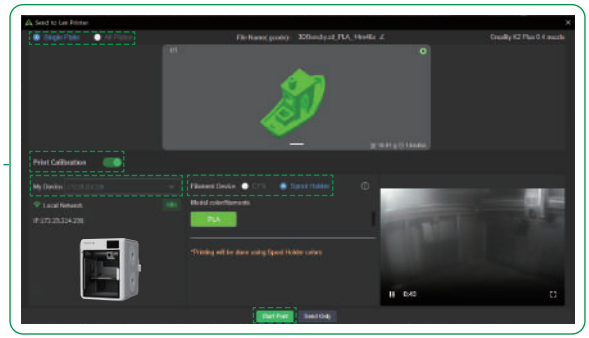

5. First print

5.3 USB drive printing

1. Plug the USB drive into the USB port

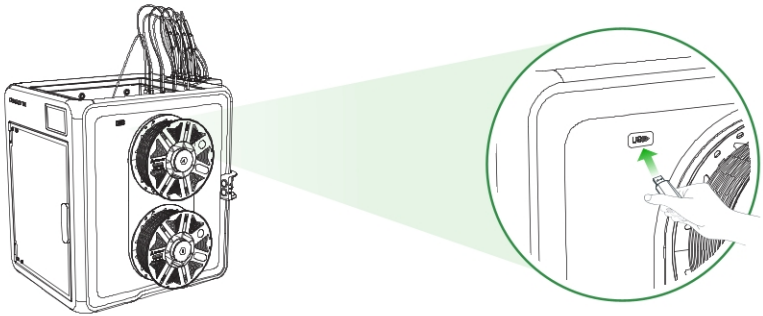

2. Choose a USB drive model

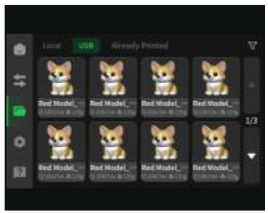

3. Choose Print

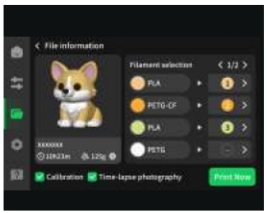

4. Printing

The current interface is for reference only. Due to the continuous upgrading of functions, it shall be subject to the latest software/firmware UI published on the official website.

Due to the differences between different machine models, the actual objects and the images can differ. Please refer to the actual machine. The final explanation rights shall be reserved by Shenzhen Creality 3D Technology Co., Ltd.

Shenzhen Creality 3D Technology Co.,Ltd.

18th Floor, JinXiuHongDu Building, Meilong Road, Xinniu Community,
Minzhi Street, Longhua District, Shenzhen City, China.

Official Website: www.creality.com
Tel: +86 755-8523 4565
E-mail: cs@creality.com