Form No. 3462-919 Rev A

2in Receiver Draw Bar

Z Master® 2000 or 4000 Series Riding Mower

Model No. 161-2810

Installation Instructions

Installation

Loose Parts

Use the chart below to verify that all parts have been shipped.

Description	Qty.	Use
No parts required	–	Prepare the machine.
Hitch ball mount Hitch pin with hairpin cotter	1 1	Install the hitch ball mount.

Preparing the Machine

1. Park the machine on a level surface.
2. Disengage the blade-control switch.
3. Move the motion-control levers outward to the NEUTRAL-LOCK position.
4. Engage the parking brake.
5. Shut off the engine and remove the key.
6. Wait for the machine to cool.

© 2023—The Toro® Company
8111 Lyndale Avenue South
Bloomington, MN 55420

Register at www.Toro.com.

Original Instructions (EN)
Printed in the USA
All Rights Reserved

3462-919

Installing the Hitch Ball Mount

1. Insert the hitch ball mount into the receiver located at the back of the machine.
2. Insert the hitch pin through the hole in the receiver and the hitch ball mount. Secure with the hairpin cotter.

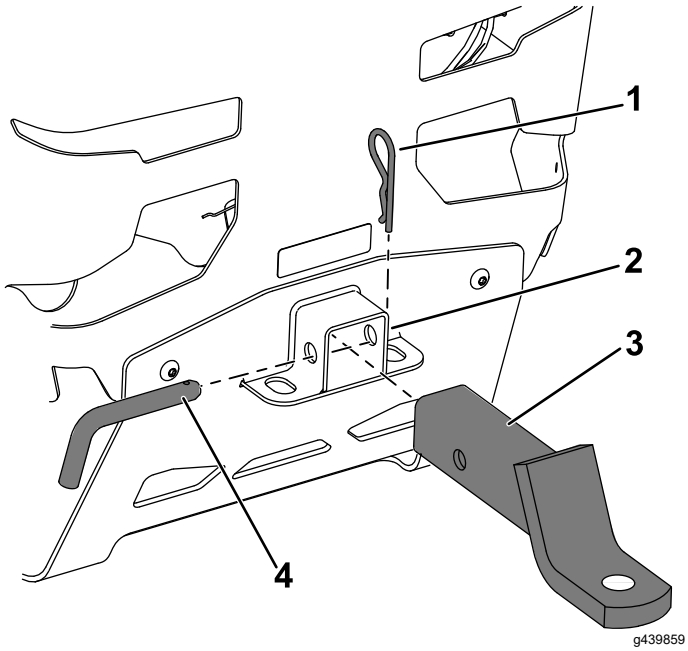

Figure 1

1. Hairpin cotter
2. Receiver
3. Hitch ball mount
4. Hitch pin

Operation

Towing a Trailer

Refer to the *Operator's Manual* for the machine for towing information.