HONDA

Owner's Manual

SNOWBLOWER

HSM1336i

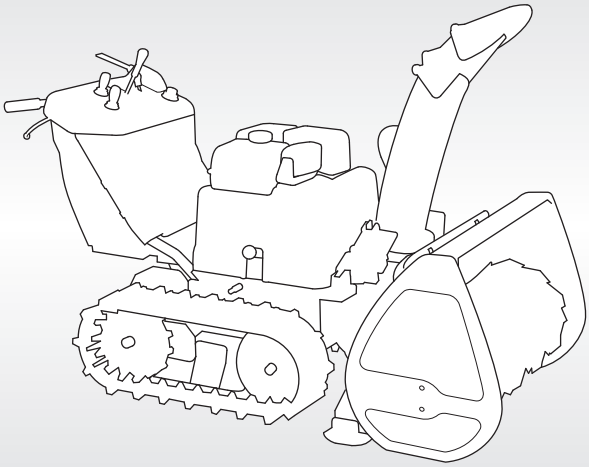

Includes US and Canadian Models

© 2024 Honda Motor Co., Ltd. -All Rights Reserved

⚠ WARNING: ⚠

The engine exhaust from this product contains chemicals known to the State of California to cause cancer, birth defects, or other reproductive harm.

Keep this owner's manual handy, so you can refer to it any time. This owner's manual is considered a permanent part of the snow blower and should remain with the snow blower if resold.

The information and specifications included in this publication were in effect at the time of approval for printing. Honda Motor Co., Ltd. reserves the right, however, to discontinue or change specifications or design at any time without notice and without incurring any obligation whatsoever.

INTRODUCTION

Congratulations on your selection of a Honda snow blower. We are certain you will be pleased with your purchase of one of the finest snow blowers on the market.

We want to help you get the best results from your new snow blower and to operate it safely. This manual contains the information on how to do that; please read it carefully.

As you read this manual, you will find information preceded by a NOTICE symbol. That information is intended to help you avoid damage to your snow blower, other property, or the environment.

We suggest you read the *Distributor's Limited Warranty (U.S.) / Distributor's Warranty (CA.)* to fully understand its coverage and your responsibilities of ownership. The *Distributor's Limited Warranty (U.S.) / Distributor's Warranty (CA.)* is a separate document that should have been given to you by your dealer.
If not, you can obtain a copy from your dealer or download the *Distributor's Limited Warranty (U.S.) / Distributor's Warranty (CA.)* from:
U.S.A http://powerequipment.honda.com/support/warranty
Canada http://powerequipment.honda.ca/parts-service/warranty

When your snow blower needs scheduled maintenance, keep in mind that your servicing dealer is specially trained in servicing Honda snow blowers.
Your servicing dealer is dedicated to your satisfaction and will be pleased to answer your questions and concerns.

INTRODUCTION

A FEW WORDS ABOUT SAFETY

Your safety and the safety of others are very important. And using this snow blower safely is an important responsibility.

To help you make informed decisions about safety, we have provided operating procedures and other information on labels and in this manual. This information alerts you to potential hazards that could hurt you or others.

Of course, it is not practical or possible to warn you about all the hazards associated with operating or maintaining a snow blower. You must use your own good judgment.

You will find important safety information in a variety of forms, including:

- **Safety Labels** — on the snow blower.
- **Safety Messages** — preceded by a safety alert symbol ⚠ and one of three signal words, DANGER, WARNING, or CAUTION.

  These signal words mean:

⚠ DANGER	You WILL be KILLED or SERIOUSLY HURT if you don't follow instructions.
⚠ WARNING	You CAN be KILLED or SERIOUSLY HURT if you don't follow instructions.
⚠ CAUTION	You CAN be HURT if you don't follow instructions.

- **Safety Headings** — such as *IMPORTANT SAFETY INFORMATION*.
- **Safety Section** — such as *SNOW BLOWER SAFETY.*
- **Instructions** — how to use this snow blower correctly and safely.

This entire book is filled with important safety information — please read it carefully.
The illustrations in this manual are based on the USA model.

CONTENTS

SNOW BLOWER SAFETY 6
IMPORTANT SAFETY INFORMATION 6
SAFETY LABEL LOCATIONS 9
CONTROLS & FEATURES 14
COMPONENT & CONTROL LOCATIONS 14
CONTROLS 17
Engine Switch 17
Fuel Valve Lever 18
Manual Start Lever 18
Mode Selector Switch 19
Throttle Control Lever 21
Main Shift Lever 24
Drive Clutch Lever 25
Auger Clutch Switch 25
Steering Lever 26
Chute Control Switch 27
Auger Housing Control Switch (USA model) 28
Auger Housing Control Switch (Canadian model) 29
Reset Switch (USA model only) 30
Auger Housing Initial Position (USA model only) 31
FEATURES 33
Drive Control Warning Indicator (red) 33
Drive Control Warning Indicator (orange) 33
Charging Indicator 34
Oil Indicator 34
Battery Indicator 35
Headlight 36
Wheel Pin 37
Snow Clearing Bar 38
Skid and Scraper 39
BEFORE OPERATION 40
ARE YOU READY TO GET STARTED? 40
IS YOUR SNOW BLOWER READY TO GO? 40
Check the General Condition of the Snow Blower: 41
Check the Engine 41
CHECK YOUR WORK AREA 42

CONTENTS

OPERATION 43
SNOW BLOWING PRECAUTIONS 43
STARTING THE ENGINE 44
OPERATING THE CONTROLS FOR CLEARING SNOW 47
Skid and Scraper 47
Auger Housing Height 50
Auger Housing Tilt Angle (USA model only) 52
Operation 53
Turning the Snow Blower 63
Battery run mode 66
CLEARING SNOW 68
REMOVING OBSTRUCTIONS 71
STOPPING THE ENGINE 72
SERVICING YOUR SNOW BLOWER 76
THE IMPORTANCE OF MAINTENANCE 76
MAINTENANCE SAFETY 77
TOOL KIT 78
MAINTENANCE SCHEDULE 79
REFUELING 81
FUEL RECOMMENDATIONS 82
ENGINE OIL LEVEL CHECK 83
ENGINE OIL CHANGE 84
ENGINE OIL RECOMMENDATIONS 86
SPARK PLUG SERVICE 87
TRACK ADJUSTMENT 89
AUGER AND BLOWER INSPECTION 90
SHEAR BOLT REPLACEMENT PROCEDURE 91
AUGER/BLOWER REPLACEMENT 92
BATTERY SERVICE 93
Battery Electrolyte Level Check (USA model) 94
Battery Electrolyte Level Check (Canadian model) 95
Battery Removal/Installation 96
Battery Charging 99
FUSE 100

STORAGE 102
STORAGE PREPARATION 102
Cleaning 102
Fuel 106
Engine Oil 110
Engine Cylinder 110
Battery 110
STORAGE PRECAUTIONS 111
REMOVAL FROM STORAGE 111
TRANSPORTING 112
BEFORE LOADING 112
LOADING 113
TAKING CARE OF UNEXPECTED PROBLEMS 115
ENGINE WILL NOT START 115
SELF-DIAGNOSIS FUNCTION 116
JUMP STARTING 128
EMERGENCY TRANSPORT 130
TECHNICAL INFORMATION 131
SERIAL NUMBER LOCATIONS 131
CARBURETOR MODIFICATIONS FOR HIGH ALTITUDE OPERATION 132
EMISSION CONTROL SYSTEM INFORMATION 133
AIR INDEX 135
EMISSION CONTROL SYSTEM WARRANTY 136
SPECIFICATIONS 137
CONSUMER INFORMATION 138
DEALER LOCATOR INFORMATION 138
HONDA PUBLICATIONS 138
CUSTOMER SERVICE INFORMATION 139
QUICK REFERENCE INFORMATION ..... Inside back cover

SNOW BLOWER SAFETY

IMPORTANT SAFETY INFORMATION

Honda snow blowers are designed to clear snow from driveways and walkways. Other uses can result in injury to the operator or damage to the snow blower and other property.

Most injuries or property damage with snow blowers can be prevented if you follow all the instructions in this manual and on the snow blower.
The most common hazards are discussed below, along with the best way to protect yourself and others.

Avoid Rotating Impeller and Auger

Hand contact with the rotating impeller inside the discharge chute is the most common cause of injury associated with snow blowers. The snow blower auger can also cause serious injury. Keep away from the impeller and auger whenever the engine is running. If you need to work around the snow blower to clear snow for any reason, always shut off the engine. If the snow discharge chute becomes clogged, stop the engine , remove the engine switch key and disconnect the spark plug cap. Use the snow clearing bar or a wooden stick to remove the obstructions. Never put your hand into the snow discharge chute while the engine is running; serious personal injury could result.

Carbon Monoxide Hazards

Your snow blower's exhaust contains poisonous carbon monoxide gas, which you cannot see or smell.
Breathing carbon monoxide can KILL YOU IN MINUTES.
For your safety:

- Do not start or operate the engine in any closed or partially enclosed area, such as a garage.
- Never run the snow blower in a closed or even partially closed area where people or pets may be present.
- Never operate the snow blower near open doors, windows, or vents.
- Get fresh air and seek medical attention immediately if you suspect you have inhaled carbon monoxide.

Early symptoms of carbon monoxide exposure include headache, fatigue, shortness of breath, nausea, and dizziness. Continued exposure to carbon monoxide can cause loss of muscular coordination, loss of consciousness, and then death.

Clear Operation Area

The snow blower can throw rocks and other objects with enough force to cause serious injury. Before operating the snow blower, carefully inspect the area and remove any visible stones, sticks, newspapers, pieces of wire, and other loose objects. Never use the snow blower to clear snow from a gravel road or driveway, as rocks may be picked up and ejected. They may cause injury to bystanders.

Keep Shields in Place

Guards and shields are designed to protect you from being hit by thrown objects and to keep you from touching hot engine parts and moving components. For your safety and the safety of others, keep all shields in place when the engine is running.

Adjust the snow discharge chute to avoid hitting the operator, bystanders, windows, and other objects with ejected snow. Stay clear of the snow discharge chute while the engine is running.

Children and pets must be kept away from the area of operation to avoid injury from flying debris and contact with the snow blower.

The muffler and engine become very hot during operation and remains hot for a while after stopping the engine. Be careful not to touch the muffler and engine while they are hot. Let the engine cool before storing the snow blower indoors.

Refuel with Care

Gasoline is extremely flammable, and gasoline vapor can explode.
Do not refuel during operation.
Allow the engine to cool if it has been in operation.
Refuel only outdoors in a well-ventilated area and on a level surface.
Never smoke near gasoline, and keep other flames and sparks away.
Do not overfill the fuel tank.
Make sure that any spilled fuel has been wiped up and cleaned before starting the engine.
Always store gasoline in an approved container.

Turn Engine OFF When Not Operating the Snow Blower

If you need to leave the snow blower for any reason, even just to inspect the area ahead, always turn the engine off.

Operation on Slopes

Operate the snow blower on slopes that are less than or equal to 15 degrees.

To avoid overturning, be careful when changing the direction of the snow blower while operating it on a slope. Do not use the snow blower to remove snow from angled roofs. The snow blower may overturn on steep slopes if left unattended, causing injury to the operator or bystanders.

Operating Conditions

Do not use the snow blower when visibility is poor. Under conditions of poor visibility, there is a greater risk of striking an obstacle or causing injury. Adjust the snow discharge chute to avoid hitting bystanders or vehicles.

Stay clear of the snow discharge chute while the engine is running and be aware that loose clothing can get drawn into the moving parts.

Operating Near Roads

Always watch for vehicle traffic when operating the snow blower near roads and driveways.

Operator Responsibility

Know how to stop the snow blower quickly in case of emergency. Understand the use of all snow blower controls.

Never permit anyone to operate the snow blower without proper instruction. Do not let children operate the snow blower.
If people or pets suddenly appear in front of the snow blower while it is in operation, immediately release the drive clutch lever to stop the snow blower and avoid possible injury from rotating auger blades.

While operating the snow blower, hold the handle firmly and walk, don't run. Wear suitable winter boots that resist slipping.

Wear safety glasses or eye shields during operation to protect eyes from thrown objects.

Exercise caution on slippery surfaces to avoid falling, especially when operating in reverse.

SAFETY LABEL LOCATIONS

These labels warn you of potential hazards that can cause serious injury. Read them carefully.

If a label comes off or becomes hard to read, contact your servicing dealer for a replacement.

USA model

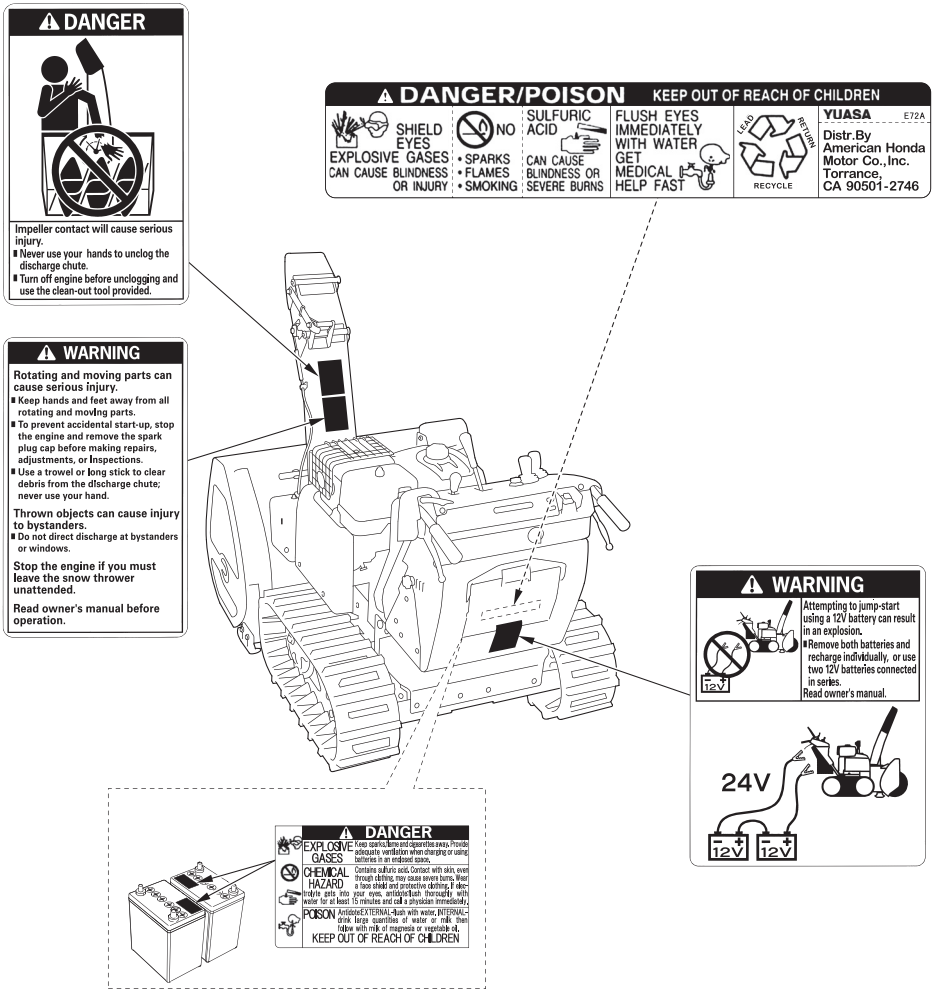

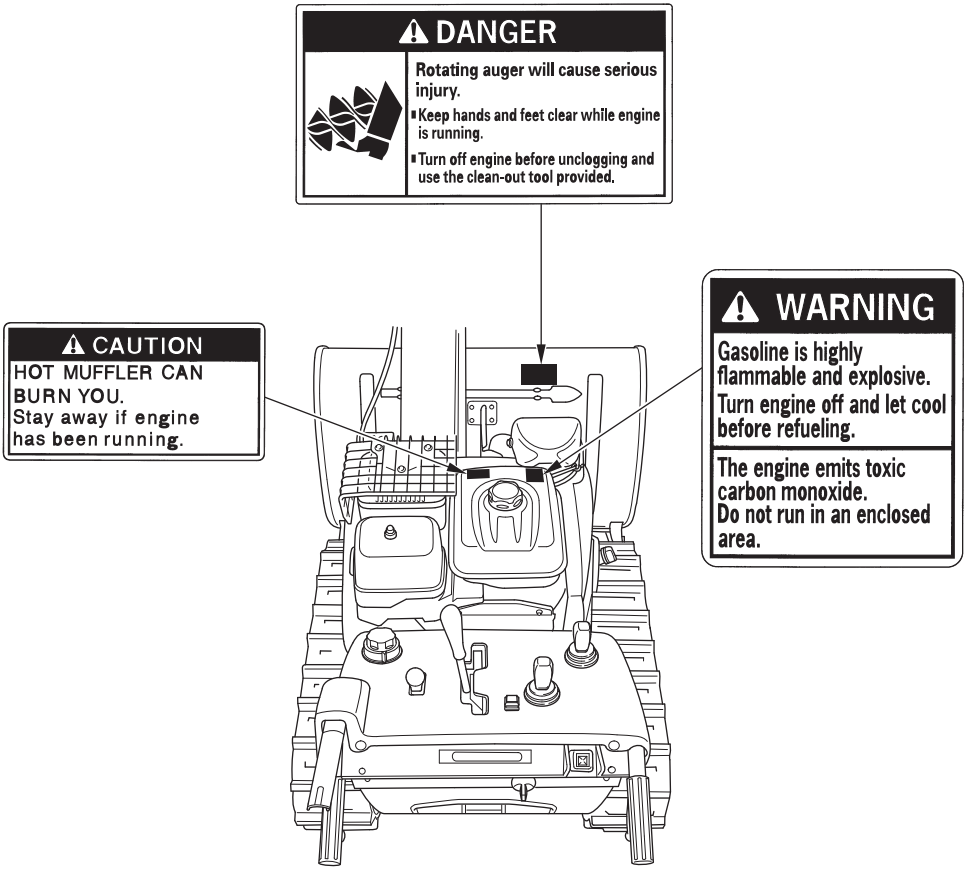
DANGER
Rotating auger will cause serious injury.
Keep hands and feet clear while engine is running.
Turn off engine before unclogging and use the clean-out tool provided.
CAUTION
HOT MUFFLER CAN BURN YOU.
Stay away if engine has been running.
WARNING
Gasoline is highly flammable and explosive.
Turn engine off and let cool before refueling.
The engine emits toxic carbon monoxide.
Do not run in an enclosed area.

Canadian model

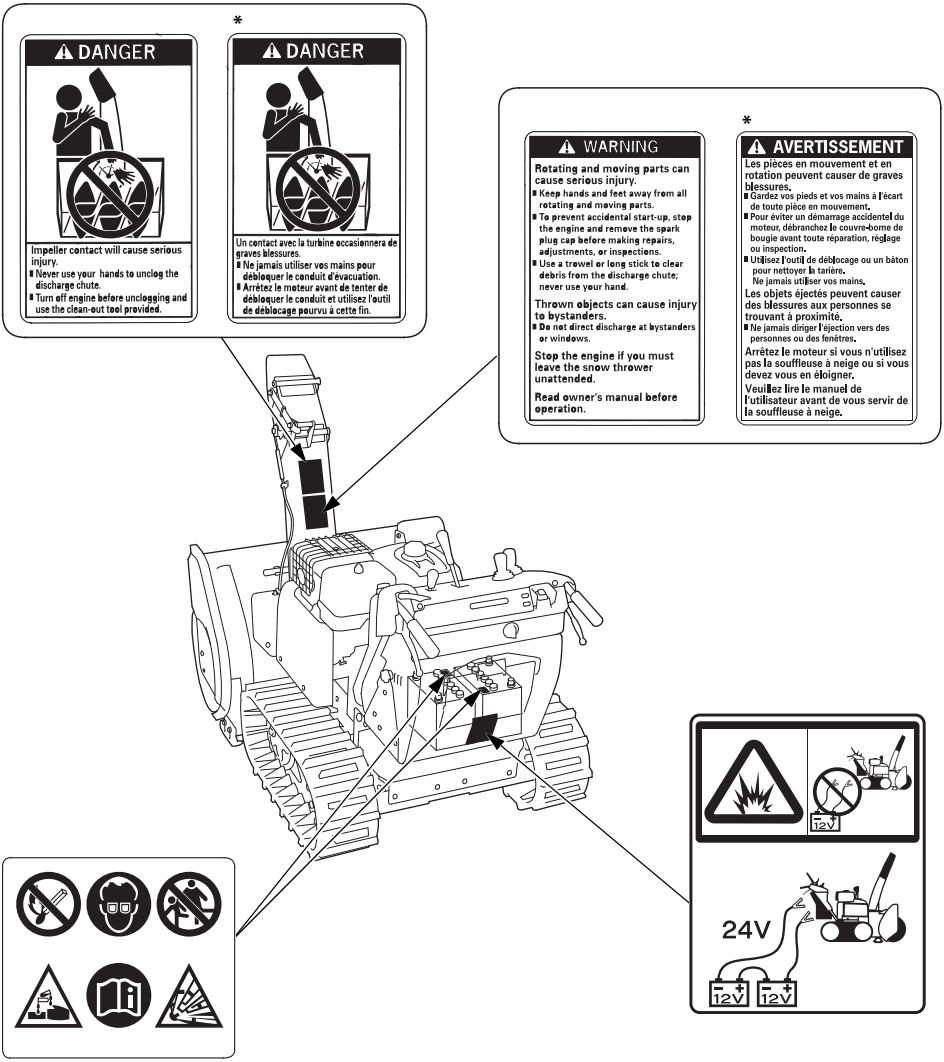

*: French labels come with the snow blower

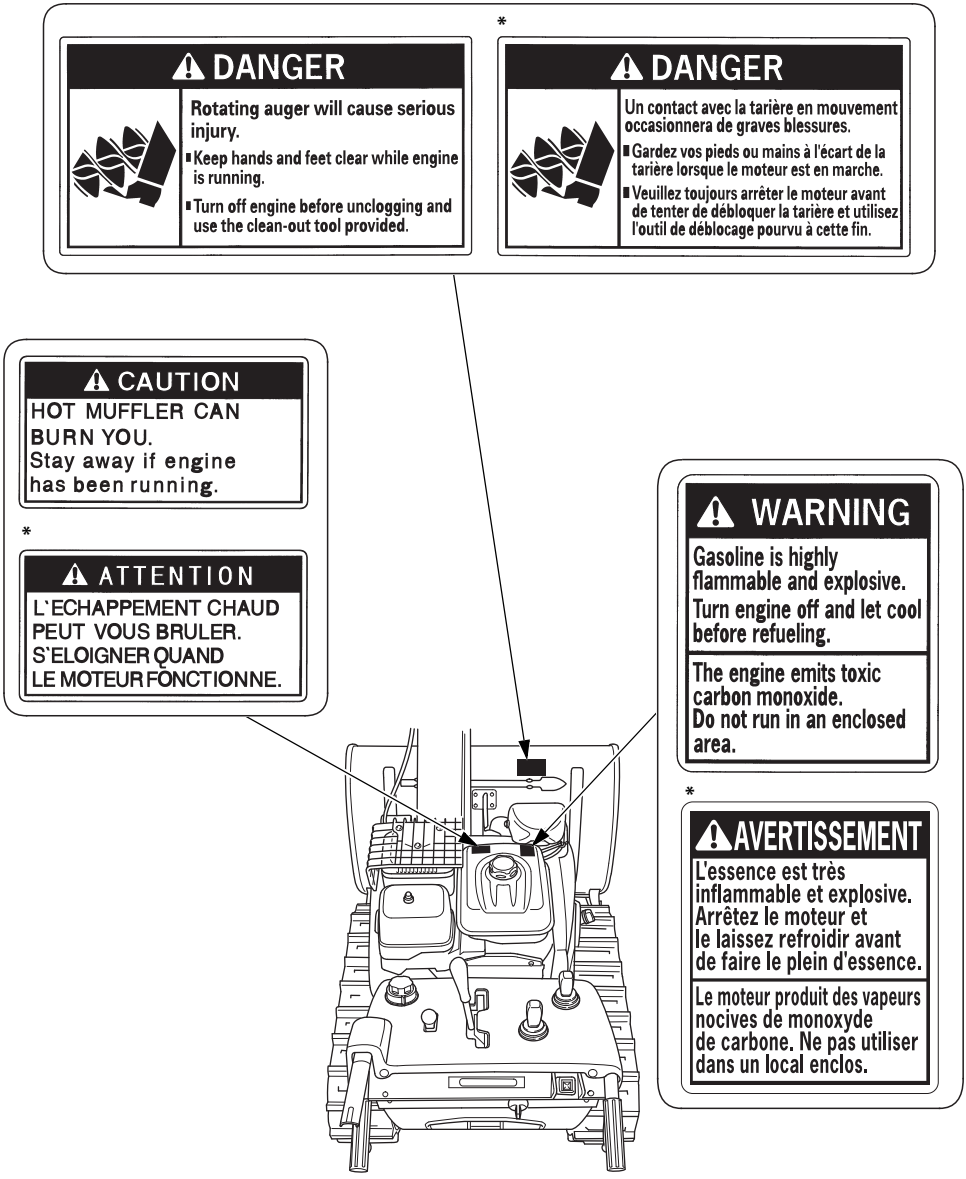

*: French labels come with the snow blower

Canadian model



- **Incorrect connection of the battery may cause the circuits to heat, produce explosive gases. If ignited, an explosion can cause serious injury or blindness.**
- **Never connect except for the 24V batteries.**
- **Read this Owner's Manual for the battery installation.**



- **Keep flames and sparks away from the batteries. Batteries produce explosive gas that can cause explosion.**



- **Handle the battery electrolyte with extreme care as it contains dilute sulfuric acid. Contact with your skin or eyes can burn you or cause loss of your eyesight.**



- **Do not allow children and other people to touch a battery unless they understand proper handling and hazards of the battery very well.**



- **Do not use a battery with the electrolyte at or below the lower level mark. It can explode causing serious injury.**



- **Wear the eye protection and rubber gloves when handling the batteries, or you can get burned or lose your eyesight by the battery electrolyte.**



- **Read this manual carefully and understand it before handling the batteries. Neglect of the instructions can cause personal injury and damage to the snow blower.**

CONTROLS & FEATURES

COMPONENT & CONTROL LOCATIONS

Use the illustrations on these pages to locate and identify the most frequently used controls.

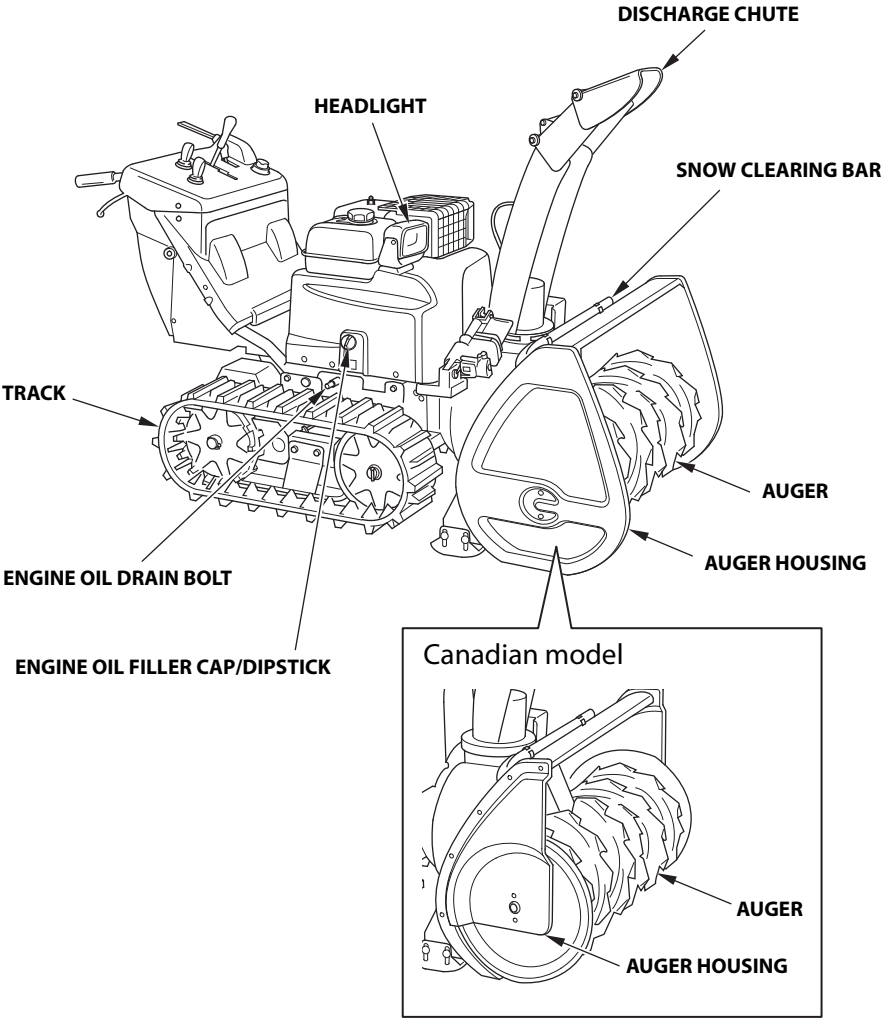

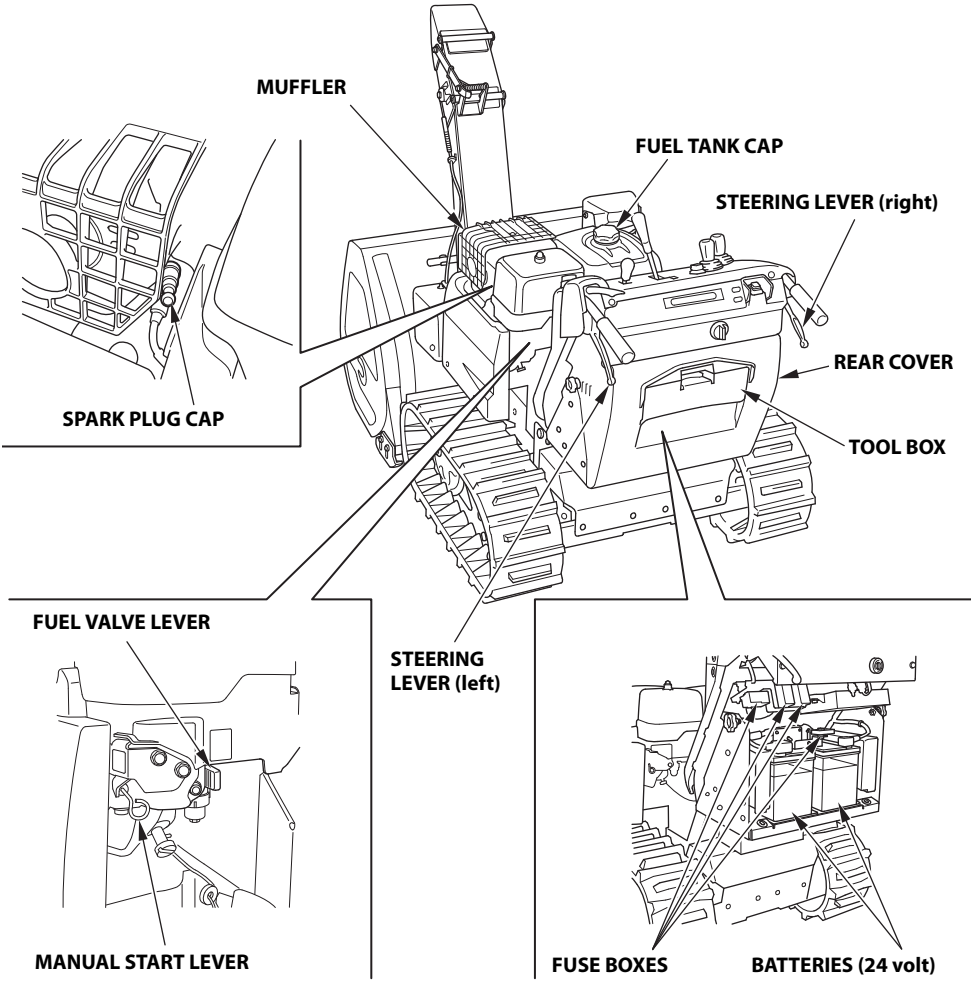
MUFFLER
FUEL TANK CAP
STEERING LEVER (right)
REAR COVER
TOOL BOX
SPARK PLUG CAP
FUEL VALVE LEVER
STEERING
LEVER (left)
MANUAL START LEVER
FUSE BOXES
BATTERIES (24 volt)

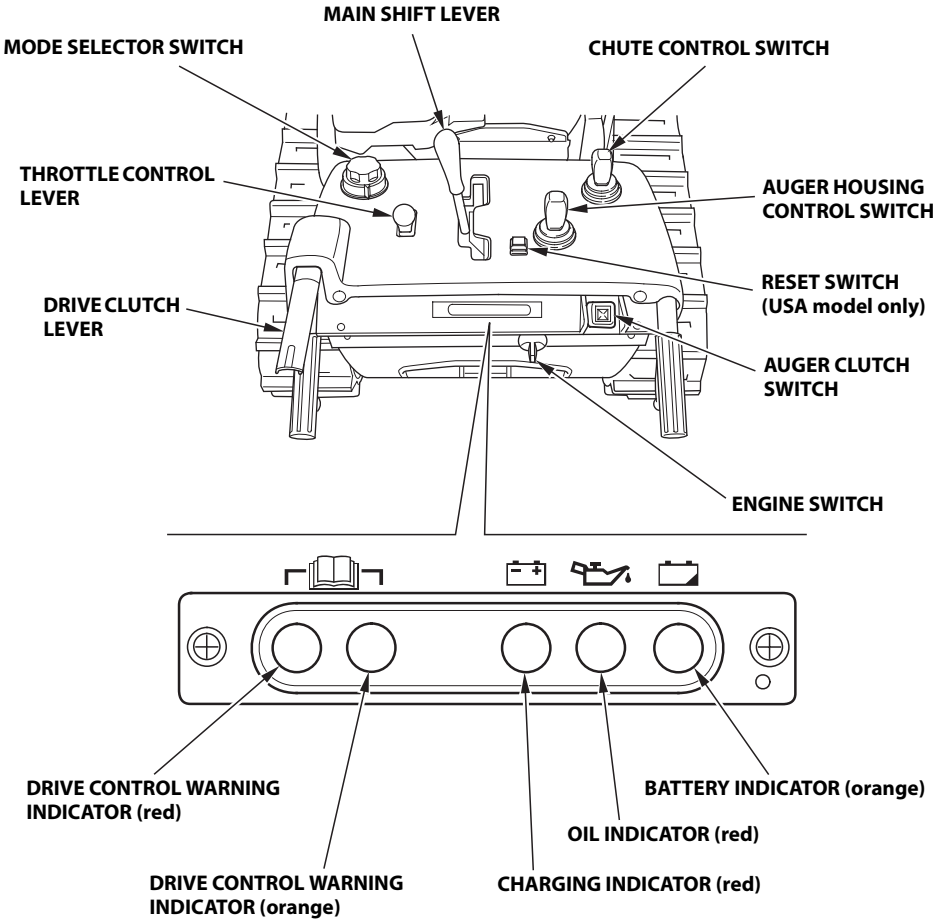
MAIN SHIFT LEVER
MODE SELECTOR SWITCH
CHUTE CONTROL SWITCH
THROTTLE CONTROL LEVER
AUGER HOUSING CONTROL SWITCH
RESET SWITCH (USA model only)
DRIVE CLUTCH LEVER
AUGER CLUTCH SWITCH
ENGINE SWITCH
DRIVE CONTROL WARNING INDICATOR (red)
BATTERY INDICATOR (orange)
OIL INDICATOR (red)
DRIVE CONTROL WARNING INDICATOR (orange)
CHARGING INDICATOR (red)

CONTROLS

Engine Switch

The engine switch controls the ignition system. The key can only be inserted and removed when turned to OFF.

OFF — Engine switch position to stop the engine.
(The engine switch key can be removed/inserted with the switch in this position.)

ON — Engine switch position while the engine is running.
Each electric circuit comes on.
(It produces a clicking sound with the switch set in this position.)

START — Engine switch position to start the engine. The starter motor turns. Release the engine switch key, and the engine switch automatically returns to the ON position.

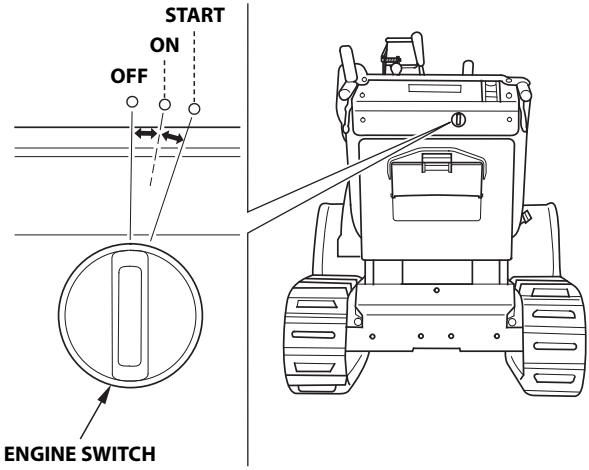

Fuel Valve Lever

The fuel valve opens and closes the fuel line leading from the fuel tank to the carburetor. Make sure that the fuel valve is positioned exactly at either the ON or OFF position. When the snow blower is not in use, always leave the fuel valve in the OFF position to reduce the possibility of fuel leakage.

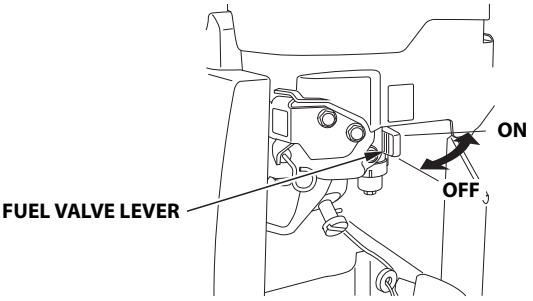

Manual Start Lever

This snow blower is equipped with an auto choke system. However, it may not function properly when foreign material (ice, etc.) is stuck on the system.

If the engine does not start after 5 attempts, push and release the manual start lever one time and try to start the engine (see page 45).

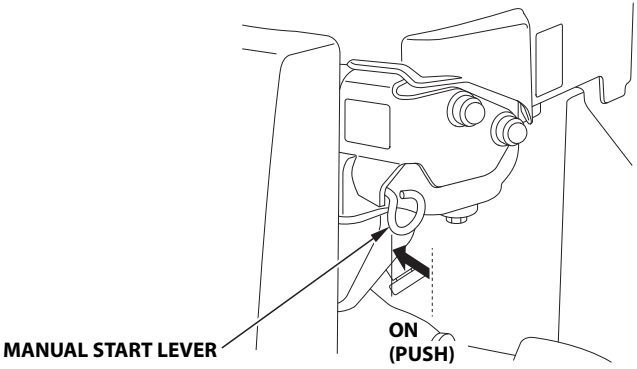

Mode Selector Switch

Use the mode selector switch to change the work mode (automatic adjustment) of the snow blower. The work mode can be selected from one of three modes: AUTO, POWER, or MANUAL.

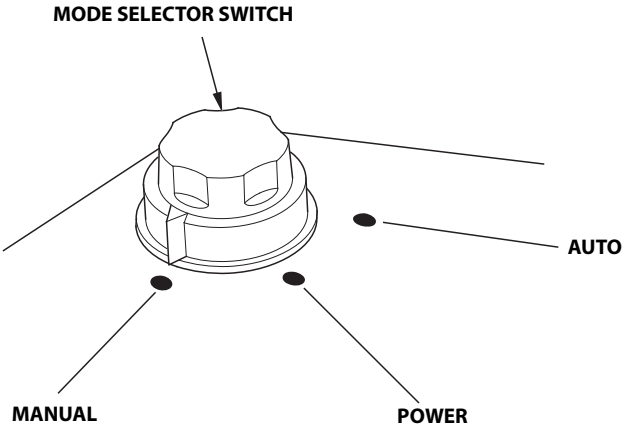

Characteristics of AUTO mode:

- Travel speed is automatically adjusted according to the workload, which reduces the tendency of snow to pile up in front of the snow blower.
- Engine speed is automatically adjusted according to the workload so the snow discharge distance remains constant.
- The auger is automatically raised when the snow blower is reversing.
  USA model only:
  In case the auger clutch switch is in the ON position, the auger is automatically returned to the original position when the snow blower begins moving forward again.
- Forward speed is set to slow. Select another mode to make the snow blower travel faster.

Characteristics of POWER mode:

- Travel speed is automatically adjusted according to the workload so engine power can be maintained at or near the maximum level.
- Engine speed is automatically adjusted according to operating conditions so the snow discharge distance remains constant that have been set with the throttle control lever.
- The auger is automatically raised when the snow blower is reversing.
  USA model only:
  In case the auger clutch switch is in the ON position, the auger is automatically returned to the original position when the snow blower begins moving forward again.

Characteristics of MANUAL mode:

- No automatic adjustment is made. Manually adjust the engine speed and travel speed according to the workload.

NOTICE

Do not turn the mode selector switch to another position while the snow blower is moving. The electronic control unit will interpret this as a failure; the snow blower will stop moving and the auger will stop turning.
When the snow blower and auger stop moving/turning, move the main shift lever to the N (neutral) position, release the drive clutch lever.
Check each part to verify it is in its proper position before resuming operation.

Throttle Control Lever

Use the throttle control lever to adjust the engine speed and/or snow discharge distance with the mode selector switch set in the POWER or MANUAL position. Note that the engine speed and snow discharge distance cannot be adjusted by operating the lever when the AUTO mode is selected.

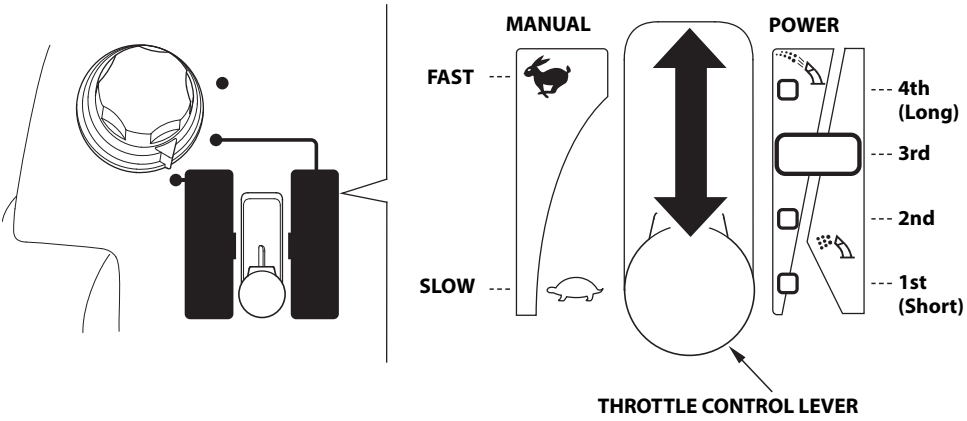

Moving the throttle control lever to the FAST side increases both the engine speed and snow discharge distance.

Moving the throttle control lever to the SLOW side decreases both the engine speed and snow discharge distance.

POWER mode:
Travel speed is automatically reduced so that the engine speed and snow discharge distance are held at the given speed and distance that have been set with the throttle control lever.
Setting the throttle control lever in the second range from the bottom clears snow the fastest (maximum snow-clearing efficiency), but the snow discharge distance is shorter. Set the throttle control lever in most appropriate engine speed and snow discharge distance for the work.

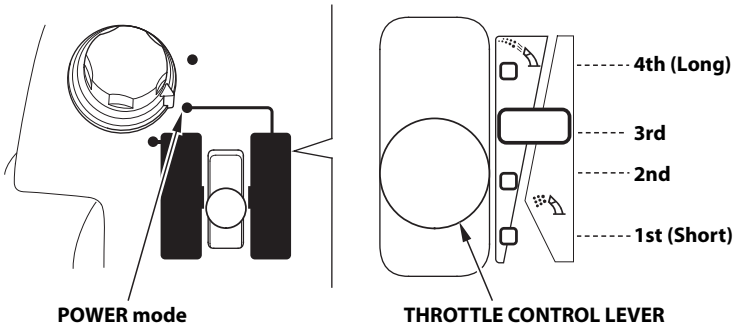

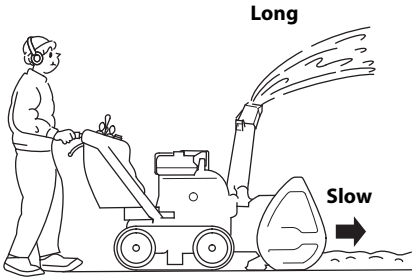

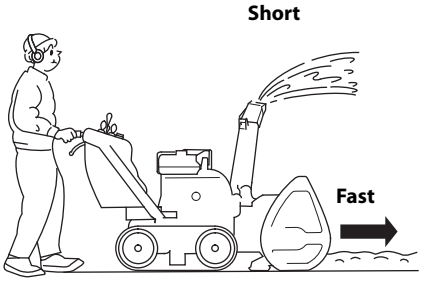

MANUAL mode:
When the workload increases while clearing the snow, the engine speed and snow discharge distance drop below the given speed and distance that have been set with the throttle control lever. Reduce the workload applied to the snow clearing part of the snow blower to hold the engine speed/snow discharge distance at the given speed/distance. If you are not sure of the appropriate position to set the engine speed and snow discharge distance, we recommend that you set the throttle control lever in the third position from the bottom (maximum power position). Then, adjust the snow discharge distance at the desired position while you are clearing the snow.

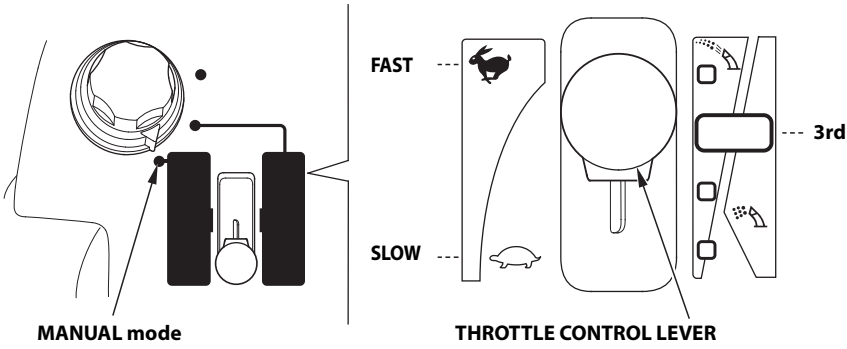

Main Shift Lever

Move the main shift lever to drive the snow blower forward or backward.
The lever has two ranges, slow range and fast range.
The speed of the snow blower can be increased and decreased in any of these two speed ranges.

To drive forward:
Move the main shift lever slowly forward from the N (neutral) position.
To reverse:
Move the main shift lever slowly rearward from the N (neutral) position.

Set the main shift lever in the N (neutral) position while the snow blower is not in operation.

- Set the travel speed by setting the main shift lever to the desired position within the slow speed range according to the nature of the snow.
- Set the travel speed according to the road surface condition and environment before moving the snow blower.

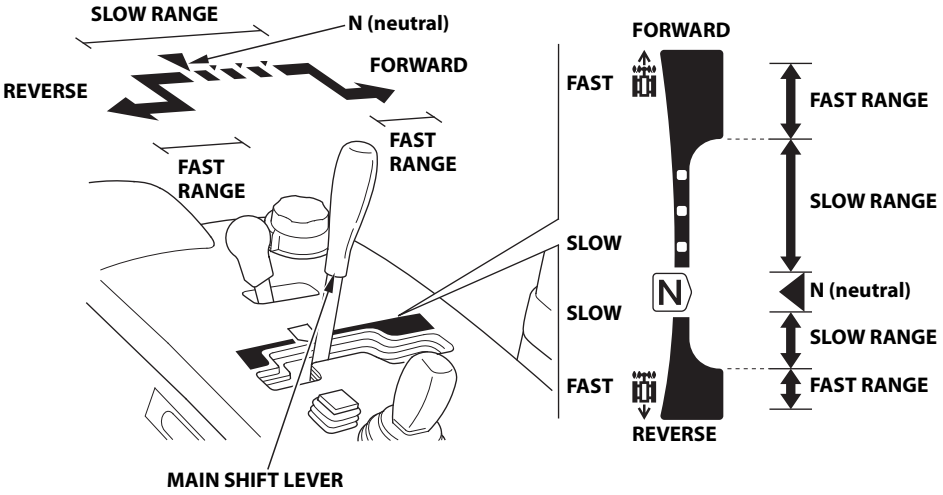

NOTICE

This snow blower has a function that limits the maximum speed in reverse. Consult to your authorized Honda snow blower dealer for details.

Drive Clutch Lever

Squeezing the drive clutch lever drives the snow blower forward or backward when the shift lever is not in neutral.

If you are moving the snow blower from one place to another, squeeze the drive clutch lever only.

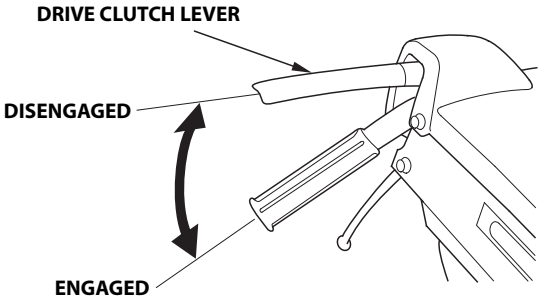

Auger Clutch Switch

If you continue pressing the auger clutch switch, the indicator comes on as a reminder and the snow blowing mechanism starts. Releasing the switch stops the mechanism and the indicator goes off. With the drive clutch lever squeezed, the auger clutch switch will be on continuously by pressing it once. Releasing the drive clutch lever stops the snow blower from moving and stops the auger.

- If the indicator (green) does not come on and neither the auger nor blower turns by pressing the auger clutch switch, have your servicing dealer check the snow blower.
- When the auger clutch switch is pushed for 3 seconds or longer, the protection function gets armed. This stops the auger and blower from turning.

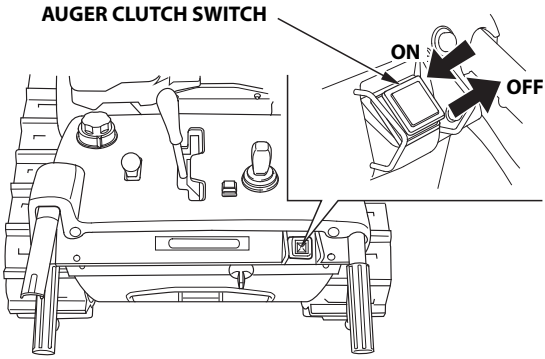

Steering Lever

Use the steering lever to turn the snow blower.

Squeeze the steering lever on the side to which you want to turn the snow blower. Note that the radius of turn can be adjusted depending on the position of the main shift lever and how much the steering lever is squeezed.

To turn to the right: Squeeze the right steering lever.
To turn to the left: Squeeze the left steering lever.

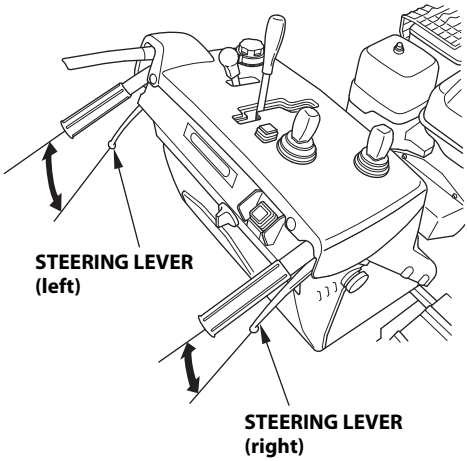

⚠ CAUTION

- Reduce speed when making turns. Use extra care when making turns as the location of the handle and panels relative to the operator will change suddenly and can cause injury.
- Note that the road condition (e.g. asphalt road, covered with snow, slope, bumpy surface, etc.) can affect the radius of turn and your steering feel.

Chute Control Switch

The snow discharge direction and angle can be adjusted by operating the chute control switch.

Turn the engine switch to the ON position and operate the chute control switch to adjust the snow discharge direction and angle up/down or right/left (see pages 54, 57 and 60).

Operate the chute control switch while the engine is running.

Operating the chute control switch while the engine is OFF may cause a dead battery.

- Do not keep operating the chute control switch with the chute/chute guide motor locked. The protection function gets armed, preventing the chute from moving. Wait a few minutes before operating the chute control switch again.

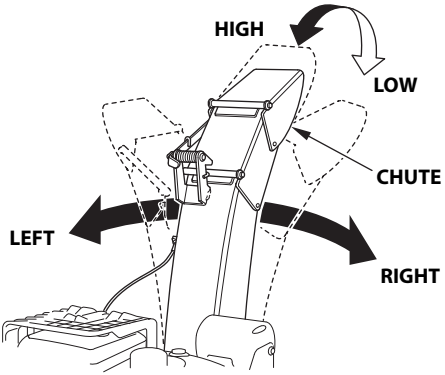

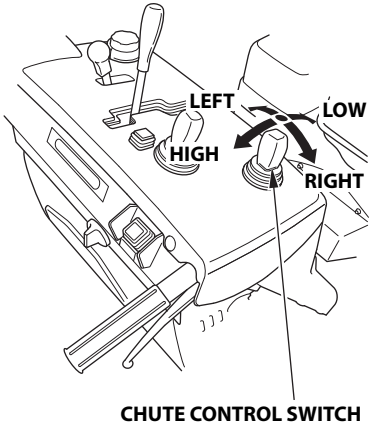

⚠ CAUTION

Adjust the snow discharge direction and angle with care not to hit bystanders, windows, and other objects with thrown snow.

Auger Housing Control Switch (USA model)

Operate the auger housing control switch to adjust the auger housing height and tilt angle (see pages 50 and 52 for adjustment).

Operate the auger housing control switch while the engine is running. Operating the auger housing control switch while the engine is OFF may cause a dead battery.

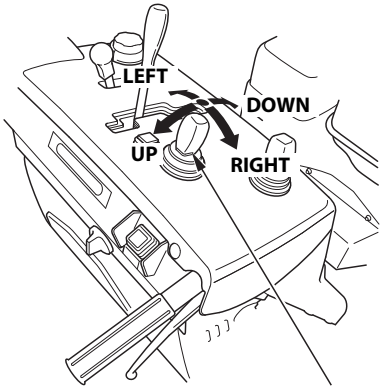

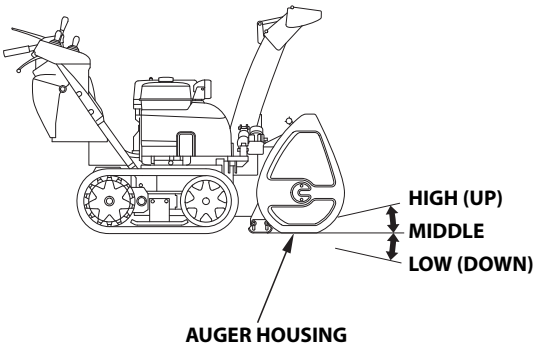

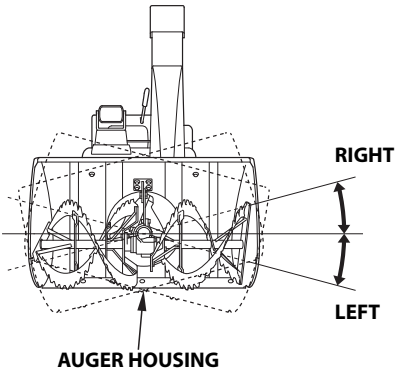

Auger Housing Control Switch (Canadian model)
Operate the auger housing control switch to adjust the auger housing height angle (see page 50 for adjustment).
Operate the auger housing control switch while the engine is running. Operating the auger housing control switch while the engine is OFF may cause a dead battery.

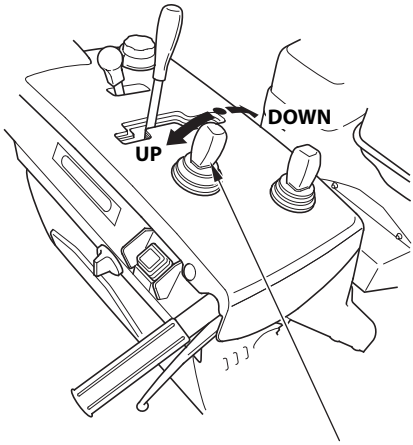

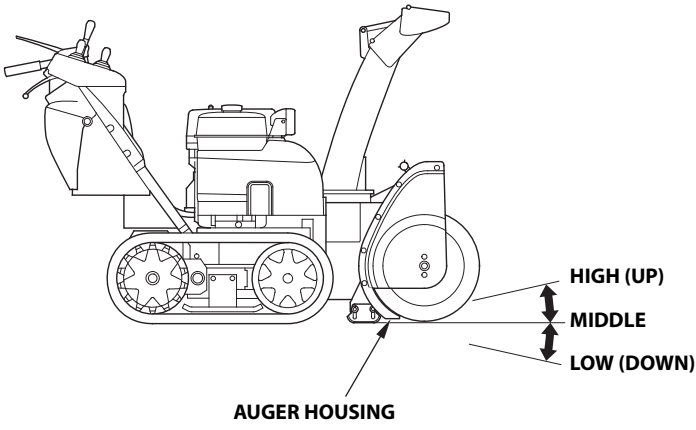

Reset Switch (USA model only)

Use the reset switch to return the auger housing to the initial position (current set position). This switch is convenient to move the auger housing by operating the auger housing control switch and to return the auger housing to the original height position. The initial position has been set at the factory in the position where the snow clearing part contacts the ground with the snow blower set on a level ground.

The initial position can be changed (see page 31 for initial position changing procedure).

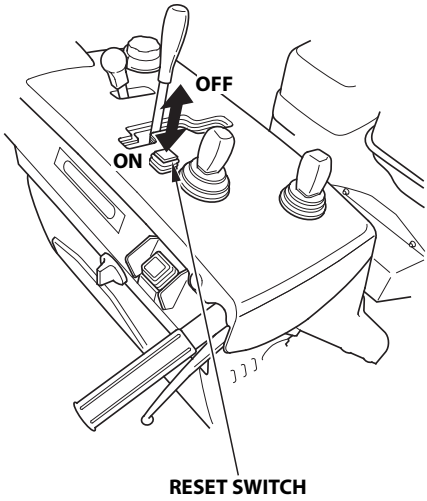

Auger Housing Initial Position (USA model only)

This snow blower allows you to change the auger housing initial position (the position where the auger housing returns when you push the reset switch) as needed.

Change the initial position (auger housing return position set at present) in case of the following:

1. When you do not want to lower the auger housing to be level to the ground, as the gravel can be caught in the auger during clearing on a graveled ground.
2. When the scraper/skid position was changed, making the initial position no longer adequate for clearing the snow.
3. When each part of the snow blower is worn, making the initial position no longer adequate for clearing the snow.
4. When you want to change the initial position to a position you want.

Park the snow blower on firm, level ground to change the initial position.

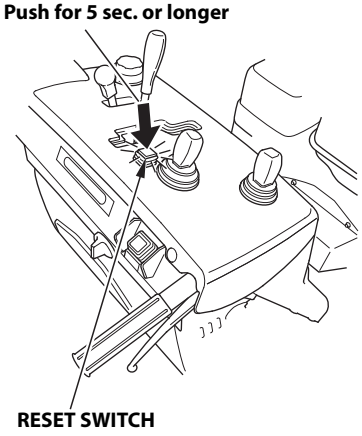

1. Turn the engine switch to the ON position (see page 45).
2. Push the reset switch and hold it pushed for five seconds or longer.
   - The auger housing moves to the initial position by pushing the reset switch. Keep pushing the reset switch.
3. Release the reset switch and check whether the reset switch indicator is blinking.

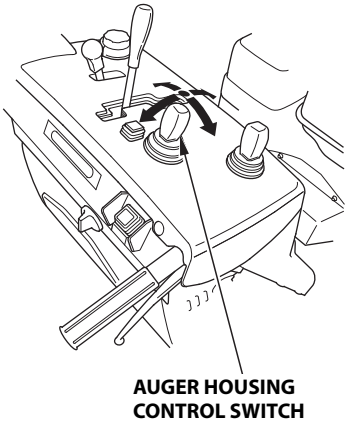

4.Operate the auger housing control switch to set the auger housing in position you want.

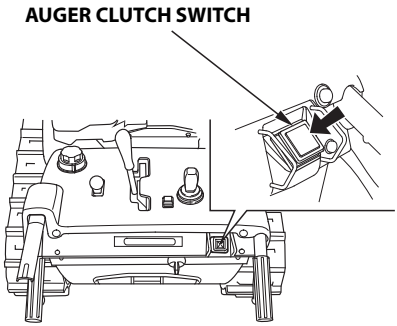

5.Push the auger clutch switch. The reset switch indicator goes off and the initial position is changed.

- If the reset switch indicator does not go off when you push the auger clutch switch, the initial position has not been changed. Set the auger housing in a lower position (step 4), and then push the auger clutch switch again.

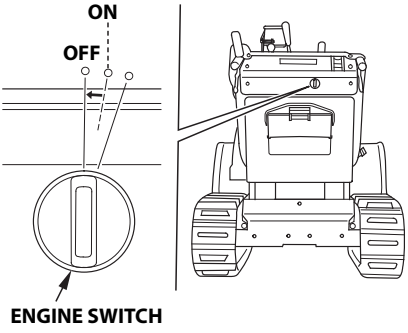

6.Turn the engine switch to the OFF position.

- Note that you cannot operate the snow blower without turning the engine switch to the OFF position once.

If you cannot change the initial position properly or if you want to return the initial position to the factory set position, consult with your authorized Honda snow blower dealer.

FEATURES

Drive Control Warning Indicator (red)

The drive control warning indicator (red) turns on for a few seconds when the engine switch is turned from OFF to ON. The indicator goes off while the engine is running. If the indicator does not come on when starting and it comes on or blinks while the engine is running, contact your servicing dealer.

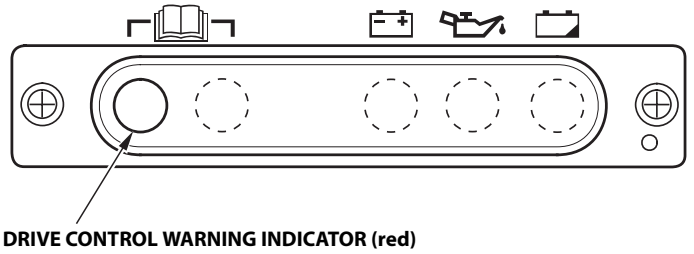

DRIVE CONTROL WARNING INDICATOR (red)

Drive Control Warning Indicator (orange)

The drive control warning indicator (orange) turns on when the engine switch is turned from OFF to ON. The indicator (orange) turns off when the engine is started. The indicator goes off while the engine is running. If the indicator does not come on when starting and it comes on or blinks while the engine is running, contact your servicing dealer.

If the orange indicator blinks, the drive control protection system may be activated because of such things as a drive control system problem or overload. See page 65 for the protection system.

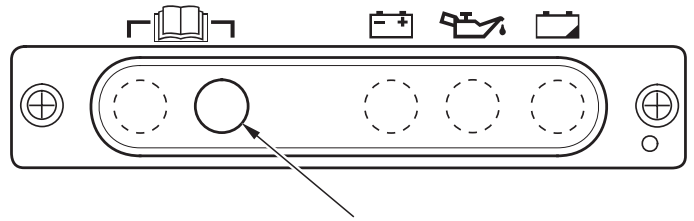

DRIVE CONTROL WARNING INDICATOR (orange)

Charging Indicator

The charging indicator (red) turns on when the engine switch is turned from OFF to ON. The indicator turns off when the engine is started. If the indicator does not come on when starting or comes on while the engine is running, contact your servicing dealer.

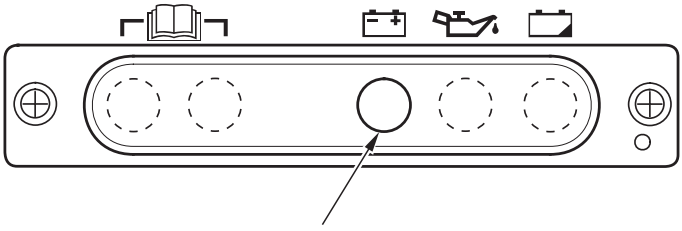

Oil Indicator

The oil indicator (red) comes on when the engine oil level is low. Turn the engine switch to the ON position. If it is normal, the oil indicator (red) comes on for a few seconds and then it goes off. The engine does not start unless the oil indicator (red) goes off. Check the engine oil level (see page 83).
If the oil indicator (red) comes on while the snow blower is running, move the snow blower immediately to a safe, level place, stop the engine, and check the engine oil level (see page 83).

NOTICE

Do not continue operating the snow blower with the oil indicator (red) on. It will cause the engine to malfunction.

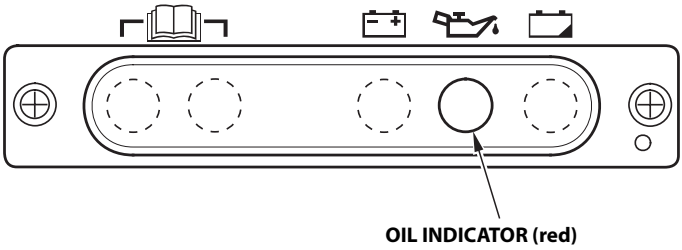

Battery Indicator

The battery indicator will blink when the voltage is getting low (see pages 96 and 99 for battery charge or replacement).

The battery indicator (orange) turns on for a few seconds when the engine switch is turned from OFF to ON and then goes off. The indicator should be off when the engine is running. If the indicator does not come on when starting, or it comes on while the engine is running, contact your servicing dealer.

Even if the engine is not running, the indicator will blink when the engine switch is in the ON position (The engine switch should be turned OFF immediately).

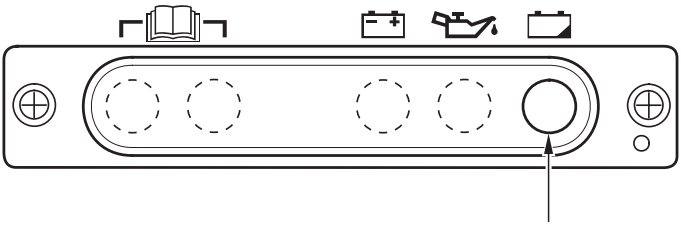

BATTERY INDICATOR (orange)

Headlight

The headlight turns on when the engine switch is in the ON position. The battery may become discharged when the light is ON while the engine is OFF. If the headlight does not come on, the battery might be discharged, faulty, or the bulb might be blown. Check the battery.

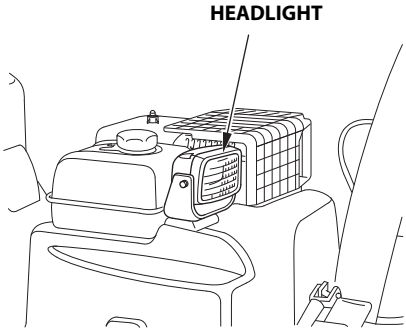

Wheel Pin

⚠ WARNING

Do not remove the wheel pins with the snow blower on a slope. The snow blower might move unintentionally, causing serious injury.

Removing the wheel pins allows the tracks to rotate freely so the operator can move the snow blower if the motor malfunctions.
Before removing the wheel pins, place the snow blower on a level surface. Stop the rotating parts, stop the engine, and remove the engine switch key.

Remove the cotter pins and wheel pins from the rear right and left wheels. Use a new cotter pin when replacing each wheel pin. After inserting the new cotter pin through the wheel pin, bend the end of the cotter pin so that it cannot fall out of the wheel pin.

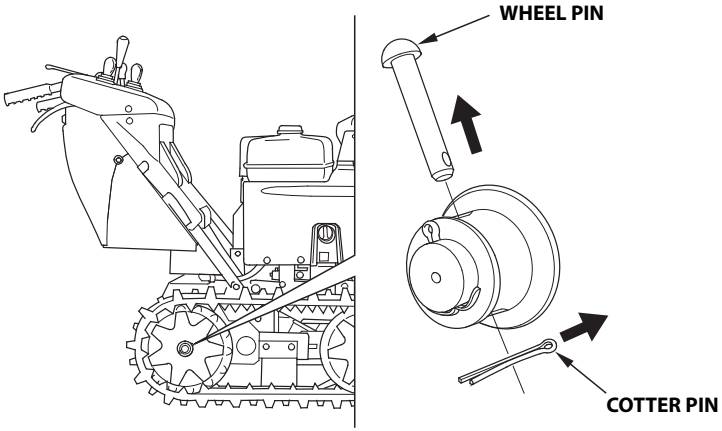

Snow Clearing Bar

If the snow discharge chute or snow blowing mechanism becomes clogged, stop the engine and use this bar to unclog it.

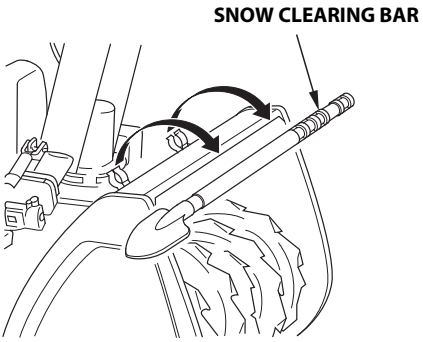

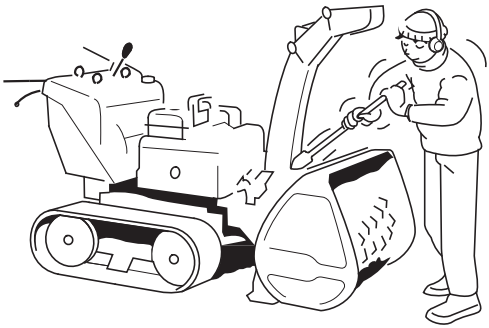

⚠ WARNING

An obstructed auger or blower could suddenly move when the obstruction is cleared.

Sudden auger or blower movement could cause severe injury if your hands are being used to clear the area.

Never clear the discharge chute or auger area with your hands, and always stop the engine, remove the engine switch key, disconnect the spark plug cap, and clear obstructions with the clearing bar.

Skid and Scraper

Adjust the skid and the scraper according to the road surface condition where you are to clear the snow. Use the skid to determine the height from the ground to the auger, and adjust the scraper to make the snow surface even (see page 47).

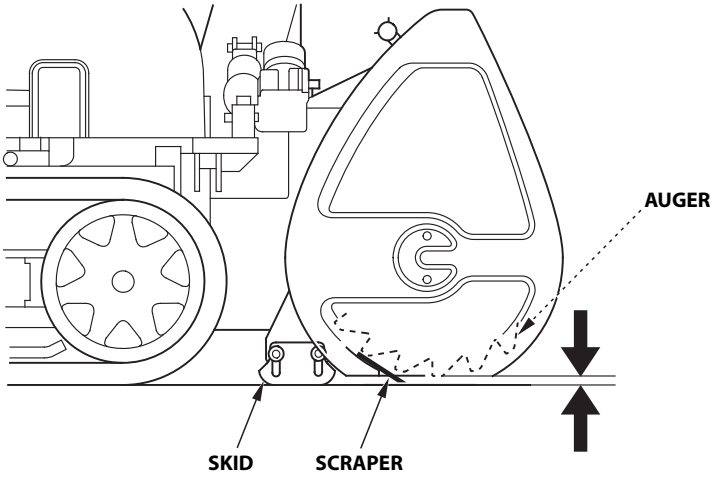

BEFORE OPERATION

ARE YOU READY TO GET STARTED?

Your safety is your responsibility. A little time spent in preparation will significantly reduce your risk of injury.

Knowledge
Read and understand this manual. Know what the controls do and how to operate them.

Familiarize yourself with the snow blower and its operation before you begin using it. Know how to quickly shut off the snow blower in case of an emergency.

IS YOUR SNOW BLOWER READY TO GO?

For your safety, and to maximize the service life of your equipment, it is very important to take a few moments before you operate the snow blower to check its condition. Be sure to take care of any problem you find, or have your servicing dealer correct it, before you operate the snow blower.

⚠ WARNING

Failure to properly maintain this snow blower, or failing to correct a problem before operation, could result in a significant malfunction.

Some malfunctions can cause serious injuries or death.

Always perform a pre-operation inspection before each operation and correct any problems.

Before beginning your pre-operation checks, be sure the snow blower is on a level surface and the engine switch is in the OFF position.

Check the General Condition of the Snow Blower:

- Check the auger housing and the discharge chute for accumulation of packed snow or ice. Clean the auger housing and discharge chute before starting the snow blower.
- Look for signs of damage.
- Check each control for proper operation.
- Check the battery electrolyte level (see page 94, 95).
- Check the auger and blower for loose or broken bolts. If broken, replace them with new ones (see page 90).
- Check the skid and scraper (see page 47).
- Check that all nuts, bolts, and screws are tightened.
- Check that the indicators work properly.
- Check the entire machine for any other faults that might have been caused previously.

Check the Engine

- Before each use, look around and underneath the snow blower for signs of oil or gasoline leaks.
- Check the oil level (see page 83).
- Check the fuel level (see page 81). Starting with a full tank will help to eliminate or reduce operating interruptions for refueling.

CHECK YOUR WORK AREA

For your safety and the safety of others, always inspect the area before operating the snow blower.

Objects
Anything that can be picked up by the auger and thrown is a potential hazard to you and others. Thoroughly inspect the area where the equipment is to be used and remove all doormats, newspapers, sleds, boards, wires, stones, nails and debris from the work area.

People and Pets
People and animals near the work area can move into your snow blower's path or into a position where they could be struck by thrown objects. Clear the area of people, especially children, and pets. Their safety is your responsibility.

Work Area
Check the condition of the snow. Adjust your snow blower ground speed (not engine speed) and snow blowing swath accordingly.

Check the skid for proper adjustment. Adjust the skid to obtain the auger ground clearance for the type of surface the snow blower will be operated over (see page 47).

Carefully check the area before operating the snow blower in reverse or when backing up close to fences or walls.

OPERATION

SNOW BLOWING PRECAUTIONS

Before operating the snow blower for the first time, please review both the *SNOW BLOWER SAFETY* chapter (see page 6) and the *BEFORE OPERATION* chapter (see page 40).

Even if you have operated other snow blowers, take time to become familiar with how this snow blower works, and practice in a safe area until you build up your skills.

Never tamper with or alter any of the controls or safety devices on the snow blower. Tampering is a violation of Federal and California law.

For your safety, do not start or operate the engine in an enclosed area such as a garage. Your snow blower's exhaust contains poisonous carbon monoxide gas that can collect rapidly in an enclosed area and cause illness or death.

⚠ WARNING

Exhaust contains poisonous carbon monoxide gas that can build up to dangerous levels in enclosed or partly enclosed areas.

Breathing carbon monoxide can cause unconsciousness or death.

Never run this product's engine in an enclosed, or even partly enclosed area.

STARTING THE ENGINE

1. Turn the fuel valve lever to the ON position. Be sure that the drain knob is tightened securely.

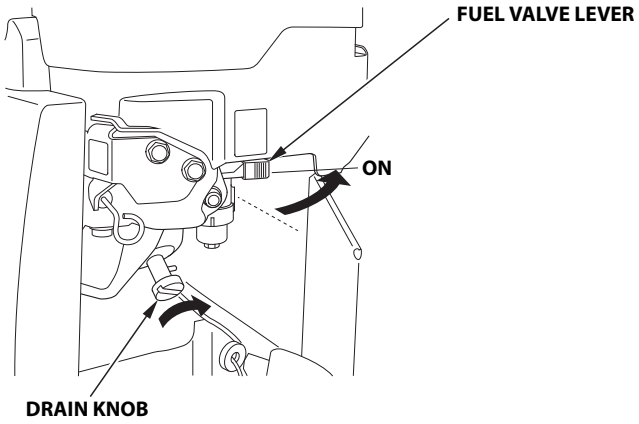

2. Set the main shift lever in the N (neutral) position.

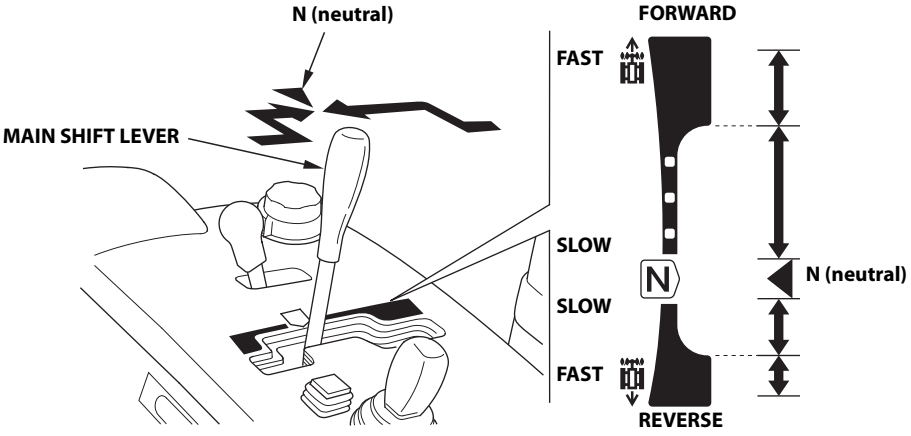

3. Turn the engine switch key to the START position and then release it after the engine starts. The switch automatically returns to the ON position.

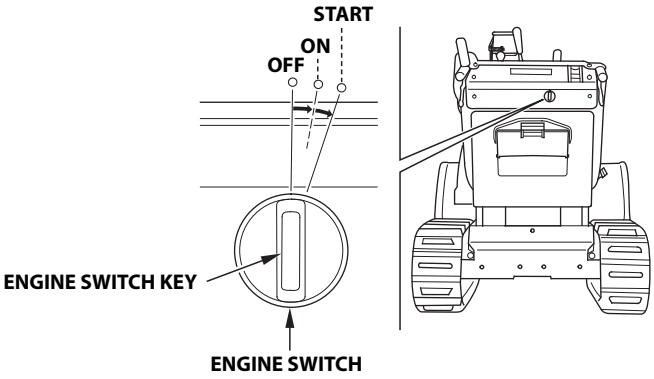

NOTICE

- *If the engine does not start within 5 seconds after cranking the starter, wait for about 10 seconds and restart the engine.*
- *Note that the starter does not crank when the auger clutch switch or drive clutch lever is operated (engine start interlock).*

- This snow blower is equipped with the auto choke system. However, it may not function properly when foreign material (ice, etc.) is stuck on the system.
- If the engine does not start after 5 attempts, push and release the manual start lever one time and try to start the engine.
- If the engine still does not start, push and hold the manual start lever and try again.

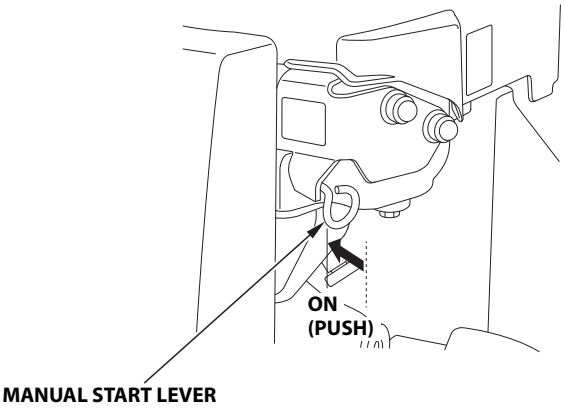

4. After starting the engine, check that the engine speed is stabilizing. Move the throttle control lever to the SLOW position gradually and warm up the engine to the normal operating temperature.

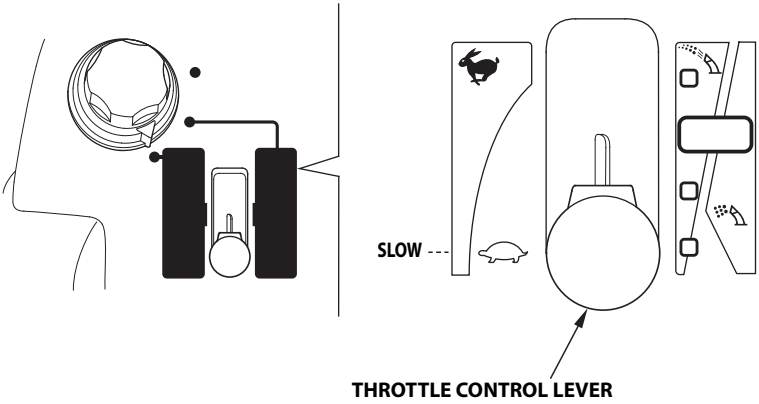

OPERATING THE CONTROLS FOR CLEARING SNOW

NOTICE

Before operating this equipment, you should read and understand the SNOW BLOWER SAFETY *on page* 6 *through* 13.

Efficiency of the snow removal work is significantly affected by the snow condition (e.g. dry, wet, etc.). Adjust the skid position, the scraper position, and the auger housing height as needed for optimum snow removal.

Skid and Scraper

Adjust the skid for the auger housing ground clearance best suited to your snow removal conditions.

1. Ensure that the auger housing is horizontal (level left to right) and lower the auger onto the ground by operating the auger control switch.

2. Turn the engine switch OFF and remove the key from the engine switch.

3. Loosen the bolts and adjust the skid and scraper height in accordance with the road surface condition where you are to clear the snow (see pages 48 and 49).

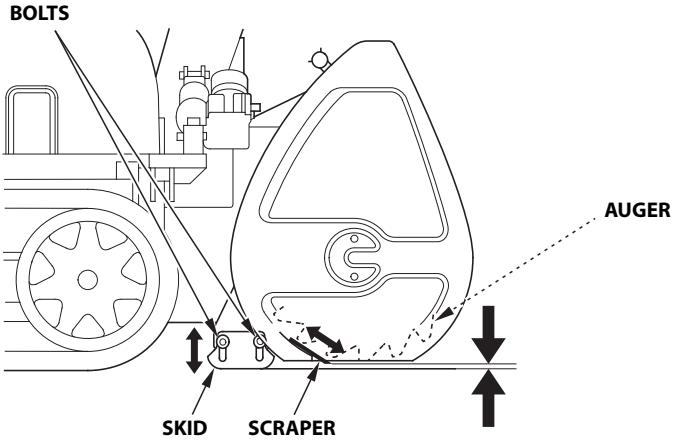

Adjust the skids equally on both sides.
Be sure to tighten the skid and scraper bolts securely after making adjustment.

NOTICE

Do not use the snow blower on rough or uneven surfaces with the auger ground clearance set for hard snow or surfaces.
This may cause serious damage to the snow blowing mechanism.

- Adjust the skids and scraper in the following cases
  - When the auger interferes with the road surface while it is turning.
  - When clearing the snow from a gravel road or surface:
    Raise the auger approximately 0.5 in (12 mm) from the ground and secure the skid in this position. Make sure the snow blower is on flat level ground when adjusting.
    Secure the scraper by raising it 0.3 in (7 mm) from the ground.
    Do not clear the snow thoroughly from the ground. Leave some on the ground to prevent gravel and other foreign material being caught in the auger.

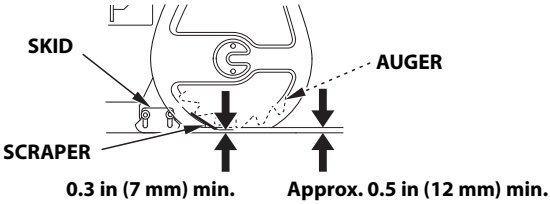

  - When the snow is too hard to dig in, making the snow blower rise on the snow:
    Raise the skids and scraper to the uppermost position of the adjustment range with the auger in contact with the ground, and secure the skids and scraper in position.

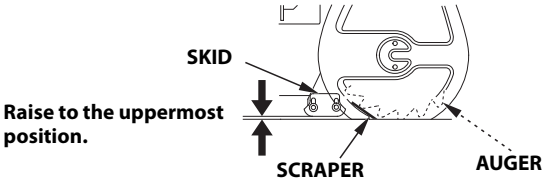

NOTICE

Note that the road surface and the snow blower's auger housing can be damaged and stones can be thrown out of the auger if it comes in contact with the ground. Return the skids and scraper to the original position when operating the snow blower under normal conditions.

- To clear the snow more neatly:
  Bring the skids in contact with the ground with the auger raised approximately 0.4 in (10 mm) from the ground. Secure the skids in this position.
  Secure the scraper by bringing it in contact with the ground.

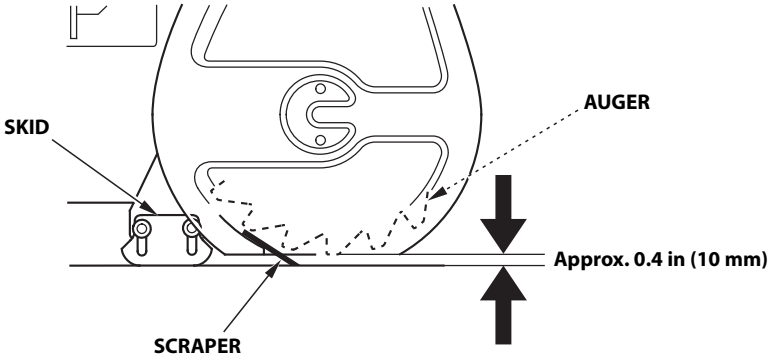

Factory pre-set clearance:
At the scraper (A): 0.1—0.3 in (3—7 mm)
At the auger (B): 0.3—0.5 in (8—12 mm)

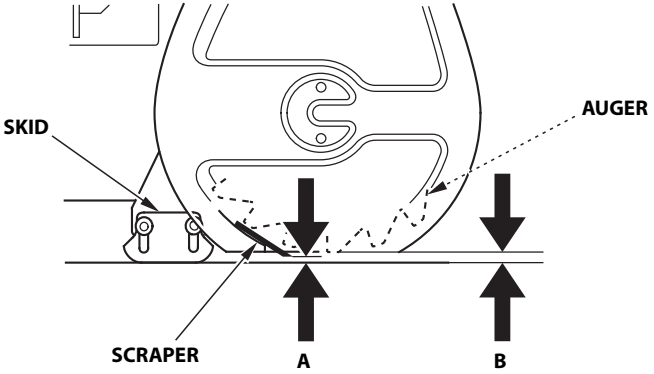

Auger Housing Height

1. Operate the auger housing control switch back and forth. The auger housing height can be adjusted without discrete steps.
   To raise: Pull the auger housing control switch to UP.
   To lower: Push the auger housing control switch to DOWN.
2. Release the auger housing control switch, and the auger housing is secured in the position.

HIGH:	Use this position when clearing the snow in steps and use it when reversing or driving the snow blower. (When the mode selector switch is in AUTO or POWER, use this position when reversing the snow blower.)
MIDDLE:	Position for normal clearing. (Use this position to clear the snow normally.)
LOW:	Position for clearing hardened snow. (Use this position when the snow you are to clear is hardened and the snow clearing part of the snow blower tends to get raised.)

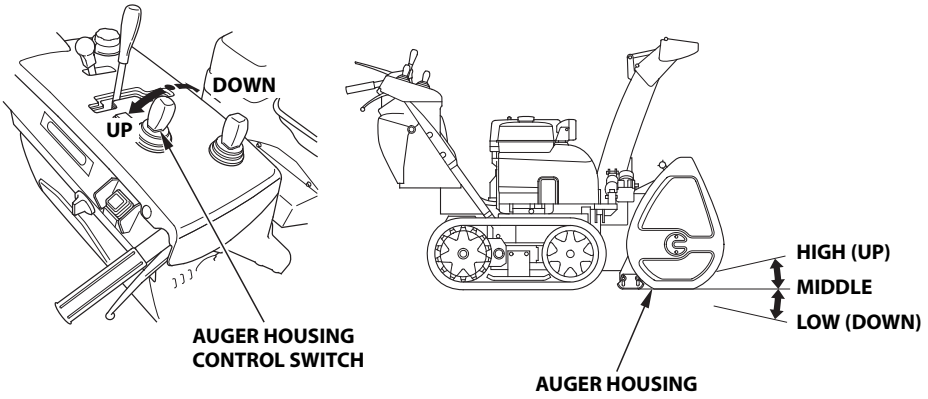

NOTICE

Use the LOW position (i.e. position for clearing hardened snow) only for clearing hardened snow. Do not set the auger housing in this position while clearing soft snow or clearing on a bumpy road. This can damage the road surface or cause stones to be thrown out of the auger, which is very dangerous. Also, it can cause excessive wear and damage to the snow clearing part of the snow blower. Damage from stones or gravel is not covered under the Distributor's Limited Warranty.

- When the mode selector switch is in AUTO or POWER, the auger housing automatically rises while going in reverse.
  USA model only:
  In case the auger clutch switch is in the ON position, the auger is automatically returned to the original position when the snow blower is transporting forward again.
- If you want to stop the automatic movement of the auger housing, change the mode selector switch to the MANUAL position.
- To stop the automatic movement of the auger housing, push the control switch once to the opposite direction of the movement.
- Frequent operation of the auger housing control switch activates the protection function and makes the drive control warning indicator (orange) blink, which prevents you from adjusting the snow clearing part of the snow blower. Stop operating the auger housing control switch and wait a few seconds before operating the switch again.

Auger Housing Tilt Angle (USA model only)
When the auger housing is tilted during snow removal, adjust the tilt angle by operating the auger housing control switch.

To tilt the auger to the right: Move the switch toward the right.
To tilt the auger to the left: Move the switch toward the left.

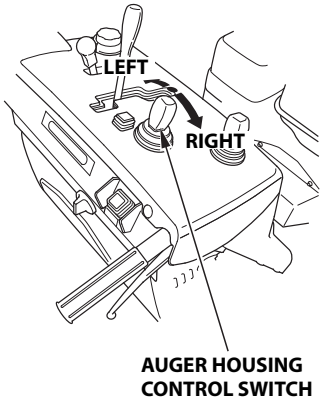

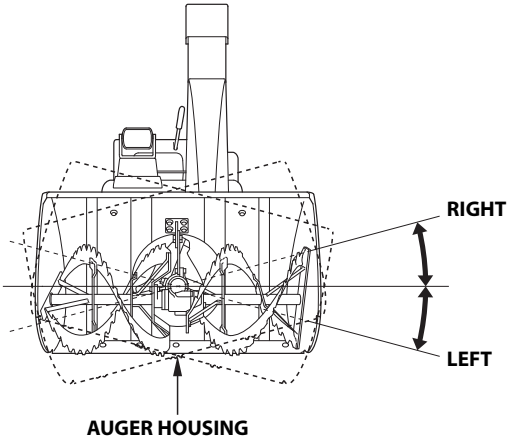

NOTICE

- *The control motor may overheat, which can cause a malfunction of the protector circuit and motor and make the auger housing unadjustable.*
- *Stop operating the switch when the auger housing reaches the right end or left end position. Do not continue to operate the auger housing control switch after it has reached the desired position.*

Operation

1. Start the engine (see pages 44 through 46).
2. Select the snow clearing work mode.
   – 1. Check that the main shift lever is in the N (neutral) position.
   – 2. Select the appropriate work mode to clear the snow by turning the mode selector switch to either the MANUAL, POWER, or AUTO position.

   Note that the operation and performance of the snow blower differ according to the work mode you select. Select the appropriate work mode for your situation (see pages 19 and 20 for the characteristics of each mode).

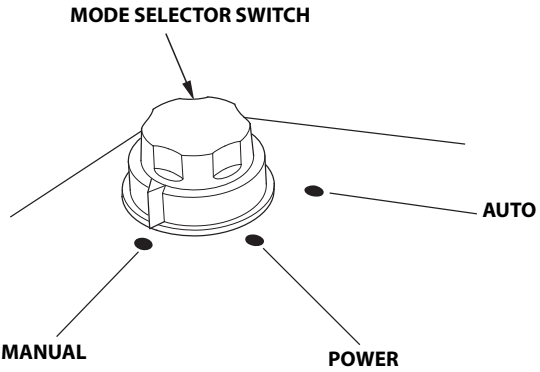

Tips for selecting the work mode:
AUTO mode: see page 54.

1) Not familiar with operating the snow blower.
2) Does not want to operate the various switches while clearing the snow.
3) Want to clear the snow as quietly as possible.
4) Want the auger to rise up as little as possible.

POWER mode: see page 57.

1) Want to adjust the traveling speed automatically according to the workload while clearing the snow.
2) Want to throw the snow far from the snow blower.
3) Want to finish clearing the snow as quickly as possible.

MANUAL mode: see page 60.
Want to operate the switches as you like.

NOTICE

Do not turn the mode selector switch to another position while the snow blower is moving. The electronic control unit will interpret this as a failure; the snow blower will stop moving and the auger will stop turning.
When the snow blower and auger stop moving/turning, move the main shift lever to the N (neutral) position, release the drive clutch lever.
Check each part to verify it is in its proper position before resuming operation.

3a. Clearing in AUTO mode

Setting the mode selector switch at the AUTO position can simplify clearing the snow. AUTO mode keeps the auger from rising, adjusts the engine speed automatically, etc.

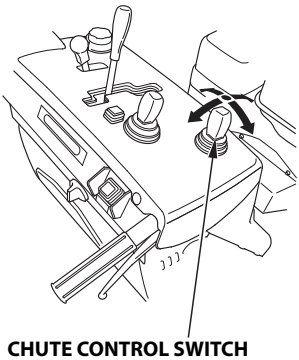

CHUTE CONTROL SWITCH

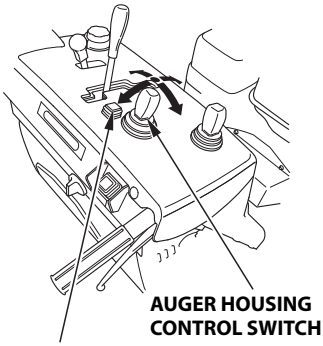

AUGER HOUSING CONTROL SWITCH

RESET SWITCH (USA model only)

1) Operate the chute control switch to adjust the snow discharge direction and angle (see page 27).

2) Operate the auger housing control switch to adjust the auger to be parallel to the road surface (see pages 50 and 52).

USA model only:

- You can return the auger to the initial position by pushing the reset switch.
- If you return the auger to the initial position by pushing the reset switch, the auger can hit against the road surface or can be raised from the road, resulting in some snow left on the ground, depending on the road condition and the position of the snow blower. Adjust the auger height position as needed.

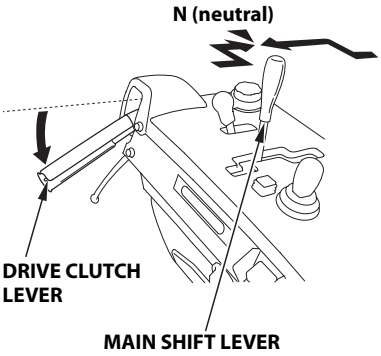

3) Check that the main shift lever is in the N (neutral) position and squeeze the drive clutch lever.

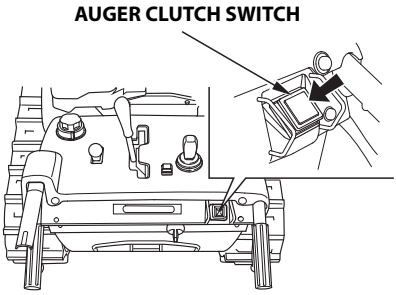

4) Push the auger clutch switch to operate on the auger and blower.
   - The indicator (green) comes on when you push the auger clutch switch.
   - When the auger clutch switch is pushed for three seconds or longer, the protection function gets armed. This stops the auger and blower from turning.
   - The auger and blower keep turning while the drive clutch lever is squeezed. Push the auger clutch switch again to stop the auger and blower. (Interlocking operation of the drive clutch lever and auger clutch switch)

⚠ WARNING

The auger and blower will start to turn when the drive clutch lever and auger clutch switch is operated. Check around the snow blower for safety before operating the lever and switch.

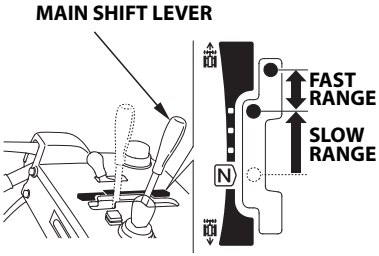

5) Move the main shift lever fully to the end of the forward slow speed range slowly and clear the snow.
   - When the auger hits against the road or inclines to a side, adjust the auger housing position by operating the auger housing control switch.
   - When the snow is small in volume or light in nature, move the main shift lever to the high speed side. Perform minor adjustment of the main shift lever to stabilize the operating speed if necessary.

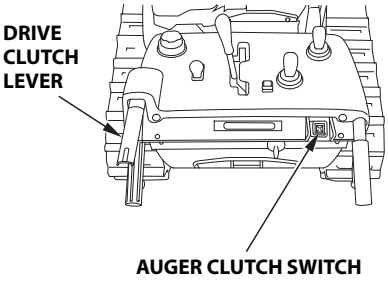

6) When the drive clutch lever is released, the auger clutch switch indicator (green) goes off, both the auger and blower stop turning, and the snow blower stops moving.

   Turn the auger clutch switch OFF if you move the snow blower without performing the snow blowing operation.

3b. Clearing in POWER mode

With the mode selector switch in the POWER position you can adjust the engine speed and snow discharge distance. Use the throttle control lever to adjust the engine speed, which determines how fast snow is picked up and how far it is thrown. Use the chute control switch to adjust height and direction of the snow discharge.

- Note that the throttle control lever only functions after the auger is turning. The engine speed is maintained automatically in POWER mode (see page 21).

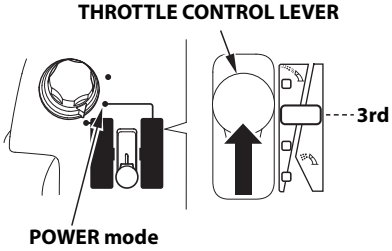

1) Set the throttle control lever in the third position from the bottom.

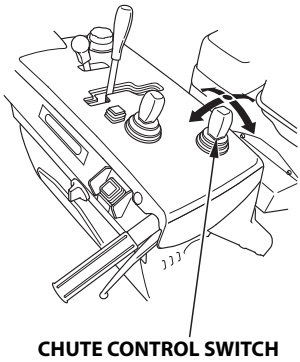

2) Operate the chute control switch to adjust the snow discharge direction and angle (see page 27).

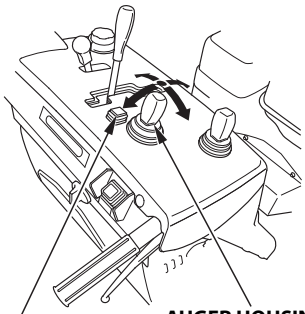

3) Operate the auger housing control switch to adjust the auger to be parallel to the road surface (see pages 50 and 52).

USA model only:

- You can return the auger to the initial position by pushing the reset switch.
- If you return the auger to the initial position by pushing the reset switch, the auger can hit against the road surface or can be raised from the road, resulting in some snow left on the ground, depending on the road condition and the position of the snow blower. Adjust the auger height position as needed.

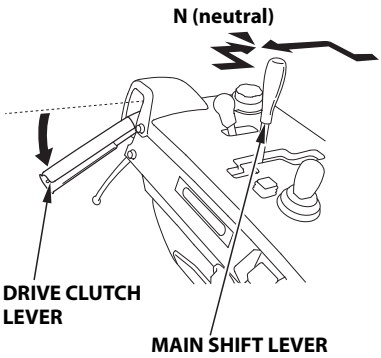

4) Check that the main shift lever is in the N (neutral) position and squeeze the drive clutch lever.

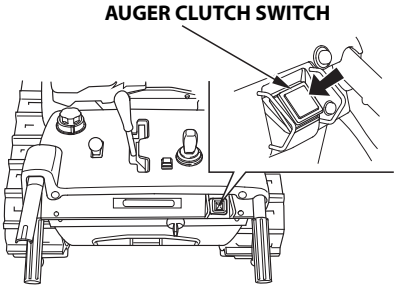

5) Push the auger clutch switch to operate the auger and blower.
   - The indicator (green) comes on when you push the auger clutch switch.
   - When the auger clutch switch is pushed for three seconds or longer, the protection function activates. This stops the auger and blower from turning.
   - The auger and blower keep turning while the drive clutch lever is squeezed. Push the auger clutch switch again to stop the auger and blower. (Interlocking operation of the drive clutch lever and auger clutch switch)

⚠ WARNING

The auger and blower will start to turn when the drive clutch lever and auger clutch switch is operated. Check around the snow blower for safety before operating the lever and switch.

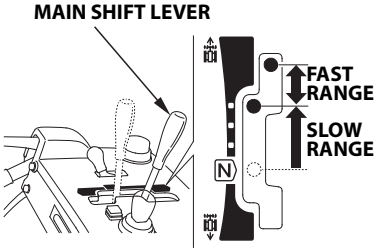

6) Move the main shift lever fully to the end of the forward slow speed range slowly and clear the snow.
   - When the auger hits against the road or inclines to a side, adjust the auger housing position by operating the auger housing control switch.
   - When the snow is small in volume or light in nature, move the main shift lever to the high speed side. Perform minor adjustment of the main shift lever to stabilize the operating speed if necessary.

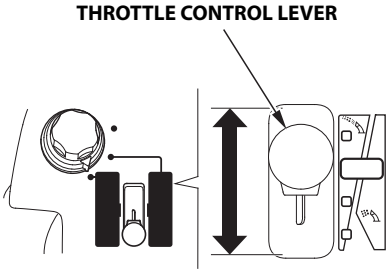

7) After stabilizing the operating speed, adjust the snow discharge distance by operating the throttle control lever as needed.
   - Traveling speed will decrease by increasing the snow discharge distance, while the speed will increase by decreasing the snow discharge distance. Adjust the snow discharge distance by operating the throttle control lever as needed.

Throttle control lever		Engine speed	Snow discharge distance	Snow amount*
Fast range	4th	Fast	Long	Small
↕	3rd	↕	↕	↕
↕	2nd	↕	↕	Large
Slow range	1st	Slow	Short	Small

*For the amount of removed snow, 2nd is the largest.

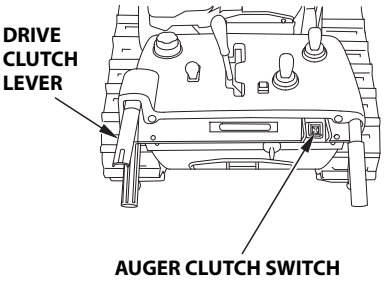

8) When the drive clutch lever is released, the auger clutch switch indicator (green) goes off, both the auger and blower stop turning, and the snow blower stops moving.

   Turn the auger clutch switch OFF if you move the snow blower without performing the snow blowing operation.

3c. Clearing in MANUAL mode

Nothing is controlled automatically when the mode selector switch is set in the MANUAL position. Engine speed and operating speed can be adjusted freely by selecting the MANUAL mode.

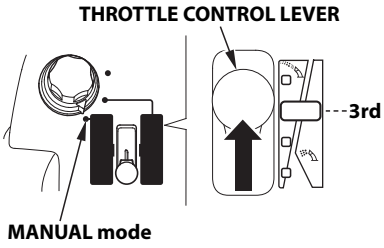

1) Set the throttle control lever in the third position from the bottom.

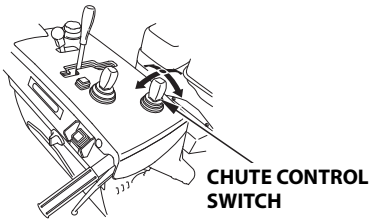

2) Operate the chute control switch to adjust the snow discharge direction and angle (see page 27).

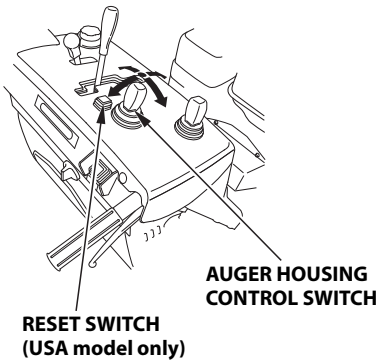

3) Operate the auger housing control switch to adjust the auger to be parallel to the road surface (see pages 50 and 52).

USA model only:

- You can return the auger to the initial position by pushing the reset switch.
- If you return the auger to the initial position by pushing the reset switch, the auger can hit against the road surface or can be raised from the road, resulting in some snow left on the ground, depending on the road condition and the position of the snow blower. Adjust the auger height position as needed.

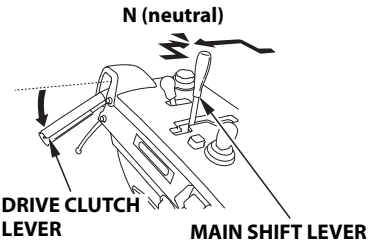

4) Check that the main shift lever is in the N (neutral) position and squeeze the drive clutch lever.

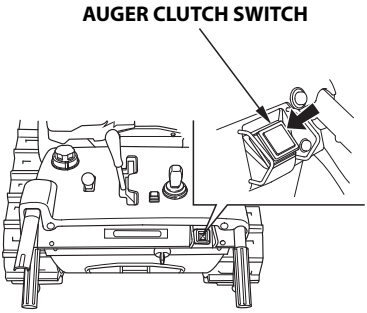

5) Push the auger clutch switch to operate on the auger and blower.
   - The indicator (green) comes on when you push the auger clutch switch.
   - When the auger clutch switch is pushed for four seconds or longer, the protection function activates. This stops the auger and blower from turning.
   - The auger and blower keep turning while the drive clutch lever is squeezed. Push the auger clutch switch again to stop the auger and blower. (Interlocking operation of the drive clutch lever and auger clutch switch)

⚠ WARNING

The auger and blower will start to turn when the drive clutch lever and auger clutch switch is operated. Check around the snow blower for safety before operating the lever and switch.

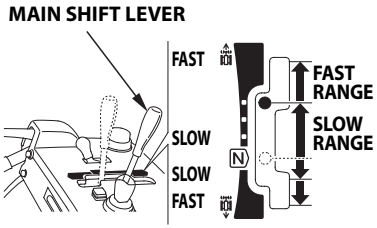

6) Adjust the operating speed by moving the main shift lever to a position within the slow speed range according to the volume and nature of the snow, and clear the snow.
   - Even when you are clearing the snow, adjust the operating speed as needed by operating the main shift lever according to the change of the volume and nature of the snow.
   - When the snow is small in volume or light in nature, move the main shift lever to the high speed side. Perform minor adjustment of the main shift lever to stabilize the operating speed if necessary.

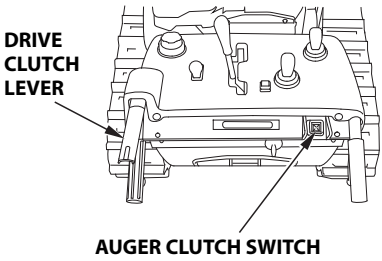

7) When the drive clutch lever is released, the auger clutch switch indicator (green) goes off, both the auger and blower stop turning, and the snow blower stops moving.

   Turn the auger clutch switch OFF if you move the snow blower without performing the snow blowing operation.

Turning the Snow Blower

You can change the direction of your snow blower while moving by squeezing either the right or left steering lever. You can make two types of turns, normal turn and turn on the spot (to change the direction of the snow blower on the spot), depending on the position of the main shift lever and the degree of squeezing pressure on the steering lever.

To turn to the left: Squeeze the left steering lever.
To turn to the right: Squeeze the right steering lever.

- Normal turn
  To make a wider turn: Squeeze a steering lever lightly.
  To make a tighter turn: Squeeze a steering lever with more pressure.

- Turn on the spot
  Squeeze the steering lever fully on the side to which you want to turn the snow blower while driving forward at a slow speed, and you can make a turn on the spot (i.e. correct the direction on the spot) by having one track moving in the forward direction and the other track moving in reverse. This function facilitates changing or correcting the direction in a narrow place such as when moving the snow blower in or out of storage.

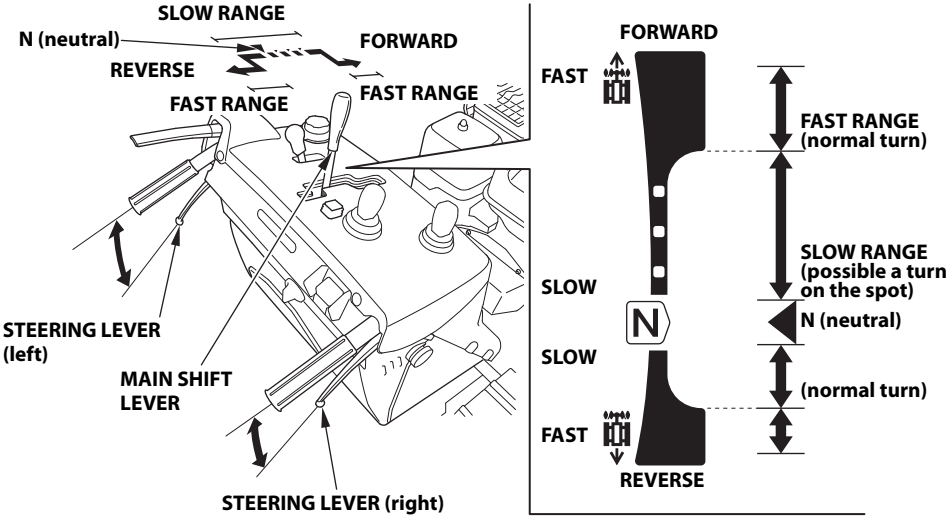

Example: To turn to the left (To turn to the right is the mirror image of the illustrations.)

- Normal turn (Left steering lever squeezed halfway)

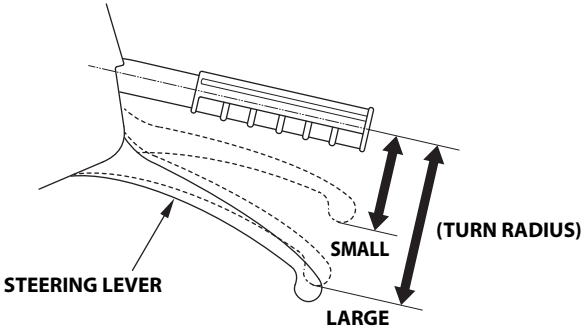

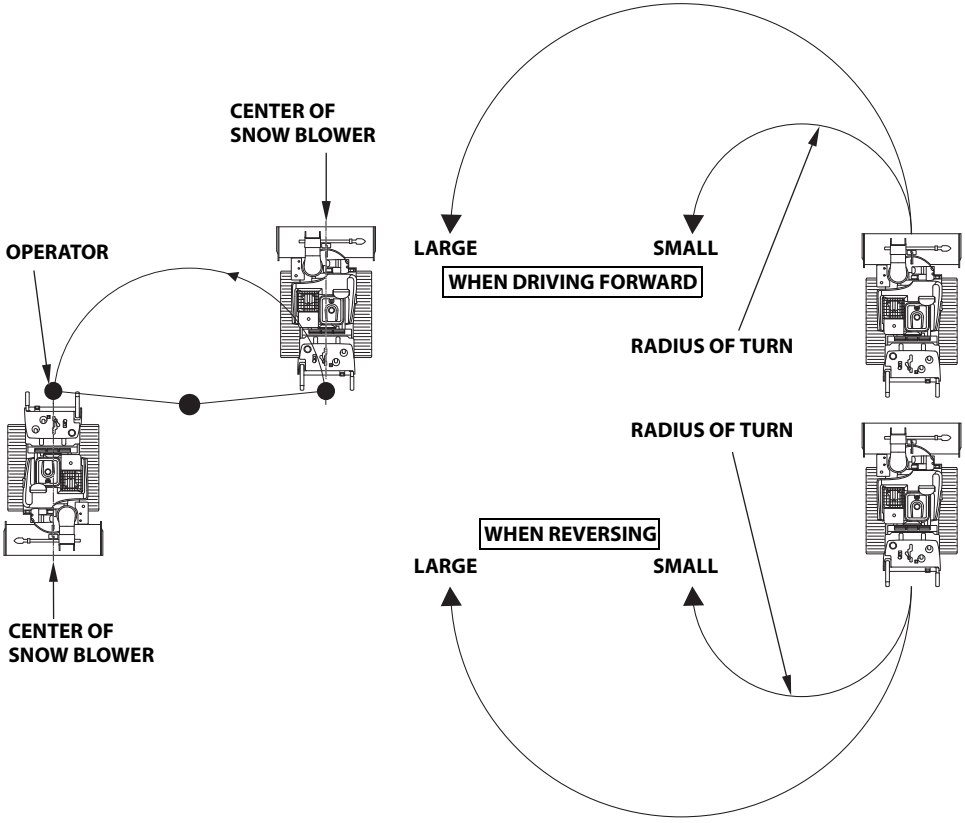

- Turn on the spot (Steering lever fully squeezed)
  Fully squeezing a steering lever causes the two tracks to move in opposite directions, one track moves in reverse while the other still goes forward, which makes the snow blower turn on the spot (corrects the direction on the spot).

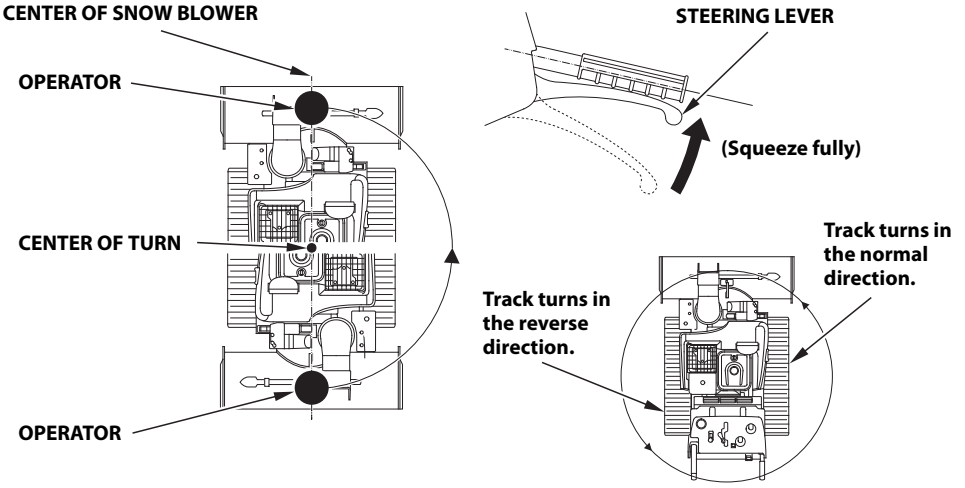

Drive motor control protection system

This snow blower is designed to drive using electric motor power. When an excessive load is applied to the motor, which depends on an operation condition of the snow blower, the protection circuit is armed making the drive control warning indicator (orange) come on and blink and possibly slow down or stop the snow blower.

If this symptom occurs, release the drive clutch lever and stop the work. Keep the engine switch in the ON position and wait until the drive control warning indicator (orange) does not blink. If the drive control warning indicator (orange) goes off, it indicates that the snow blower has been restored to its normal condition and you can continue clearing snow.

Note that the protection system functions frequently if the motor is under an excessive load. Adjust the load to a proper level.

The snow blower might be faulty if the engine does not restart or the drive control warning indicator (orange) blinks when restarting the engine. Move the snow blower to a safe place by removing the wheel pins from the tracks and check troubleshoot the problem by referring to the symptom-to-troubleshooting table (see pages 118 and 119). Have your servicing dealer check and repair your snow blower if necessary.

See page 130 for wheel pin removal.

Battery run mode

Use the battery run mode to drive the snow blower in case the engine does not start.

When the main shift lever is in the other position, excepting the N (neutral) position, the drive control warning indicator (orange) blinks and you cannot start the battery run mode, even if the right and left steering levers are squeezed simultaneously for approximately 3 seconds.

1. Set the main shift lever in the N (neutral) position.
2. Release the drive clutch lever to set it in the STOP position.
3. Turn the engine switch to the ON position.
4. Squeeze the right and left steering levers simultaneously for approximately 3 seconds.

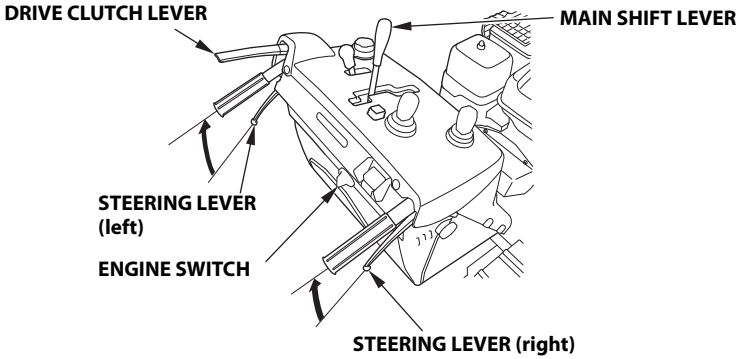

5. Both the drive control warning indicator (red) and the drive control warning indicator (orange) blink after squeezing the right and left steering levers for approximately 3 seconds. Release both the steering levers, and then squeeze the drive clutch lever when the indicators blink.

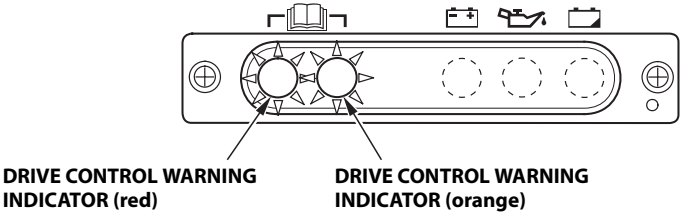

- If the drive clutch lever and the main shift lever are not operated within 5 seconds after the drive control warning indicators start to blink, the indicators stop blinking but they stay on automatically. The battery run mode is automatically disarmed, which prevents the snow blower from running with the battery power. Return the engine switch to the OFF position and restart the engine.
- The battery run mode remains on while the drive clutch lever is squeezed.

6. Run the snow blower at an adequate speed by operating the main shift lever.
7. After running, turn the engine switch to the OFF position.

- Use the battery run mode to drive the snow blower in case the engine does not start.
- The battery run mode consumes battery power. Take care not to operate the battery run mode for longer than a total of 3 minutes and operate it with the battery fully charged. Operating the battery run mode for longer than 3 minutes or frequent operation will discharge the batteries, which prevents you from starting the engine and snow blower.
- Be sure to turn the engine switch to the OFF position after starting with the battery run mode. Leaving the engine switch in the ON position will discharge the battery and may cause an accident.
- Recharge the battery as needed (see page 99).
- Be sure to set the main shift lever in the N (neutral) position before starting the battery run mode.
- The snow blower may not start under the following conditions.
  - Wheel pin(s) is/are broken or missing.
  - Battery is discharged.
  - Drive motor is faulty.

  If necessary, move the snow blower to a safe place by removing the wheel pins (see page 130).

CLEARING SNOW

For efficient operation, it is important to select an adequate engine speed for the required snow discharge distance and clear the snow without lowering the engine speed. If the engine speed keeps dropping by setting the main shift lever in the slow position, clear the snow as follows.

- Clearing in narrow width
  When the snow is deep or hard, set the main shift lever in slow and clear the snow using a narrower clearing width (less than the width of the snow blowing mechanism).

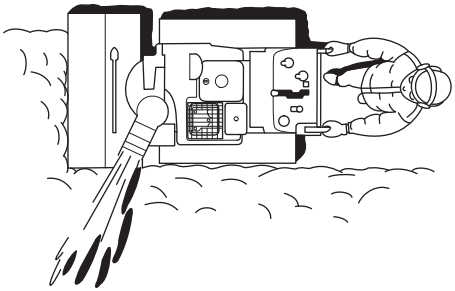

- Clearing with back and forth motions
  If the snow is so hard that the snow blower tends to ride over the surface, push it back and forth to remove snow gradually.

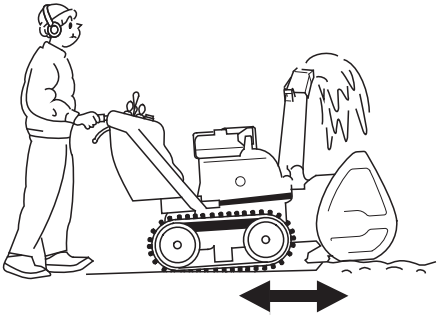

When the mode selector switch is in AUTO or POWER, the auger housing automatically rises while going in reverse.
USA model only:
In case the auger clutch switch is in the ON position, the auger is automatically returned to the original position when the snow blower is transporting forward again.

- Intermittent clearing
  Follow the steps below when the engine lugs against deep or heavy snow.
  1. Operate the main shift lever and move it to the N (neutral) position until the snow blower recovers the engine speed. (Allow the auger clutch switch indicator (green) to come on and keep the auger turning.)
  2. After the auger is clear of snow and the snow blower recovers the engine speed, move the main shift lever to the forward slow speed range.
  3. Repeat the above steps if engine speed is still reduced.

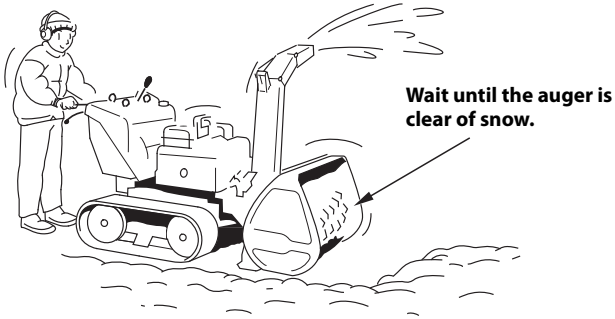

- Clearing in steps
  If the height of the snow is greater than the height of the snow blowing mechanism, remove it in several steps as shown.
  1. To ascend the slope:
     - Operate the auger housing control switch to raise the auger a little.
  2. To dig into the snow:
     - Operate the auger housing control switch to lower the auger a little.
     - Adjust the skid position as needed (see page 48).

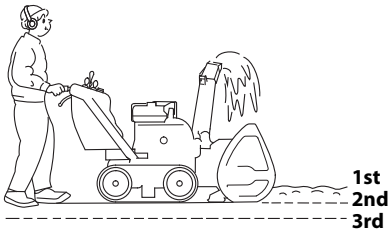

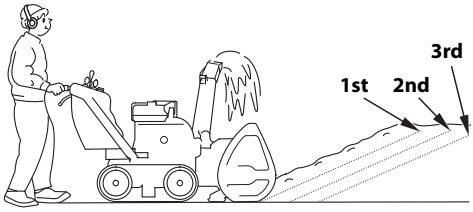

⚠ WARNING

Adjust the snow discharge chute to avoid hitting the operator, bystanders, windows, and other objects with thrown snow. Stay clear of the snow discharge chute while the engine is running.

To move from one place to another, or to change direction, use the drive clutch lever. Using the auger clutch switch will cause the snow blowing mechanism to rotate, possibly resulting in equipment damage or personal injury.

NOTICE

Be sure to set the main shift lever in SLOW RANGE when removing the snow.

REMOVING OBSTRUCTIONS

⚠ WARNING

An obstructed auger or blower could suddenly move when the obstruction is cleared.

Sudden auger or blower movement could cause severe injury if your hands are being used to clear the area.

Never clear the discharge chute or auger area with your hands, and always stop the engine, remove the engine switch key, disconnect the spark plug cap, and clear obstructions with the clearing bar.

1. If the snow discharge chute is clogged with snow during operation, stop the engine and remove the snow from it using the snow clearing bar.

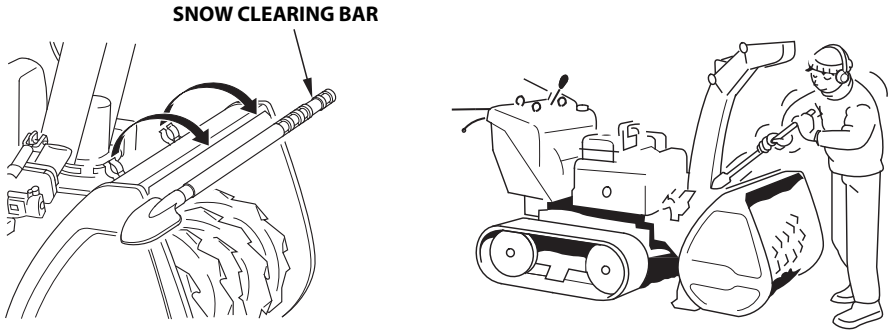

2. After clearing the snow, clean and return the snow clearing bar to its original position.

STOPPING THE ENGINE

⚠ WARNING

Park the snow blower on a firm, level ground. You could be hurt or killed if the snow blower moves unexpectedly.

Emergency engine stopping

Turn the engine switch to the OFF position and remove the key.
Be sure to release the drive clutch lever and move the main shift lever to the N (neutral) position before restarting the engine.

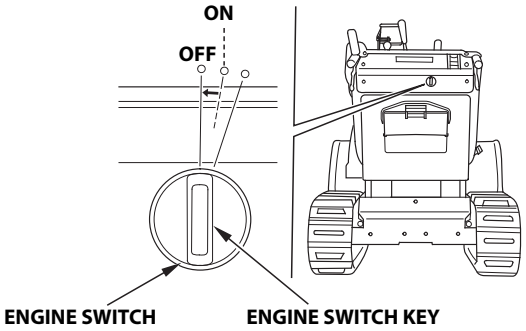

Normal engine stopping

1. Release the drive clutch lever. The snow blower stops traveling and the auger stops turning a few seconds later.

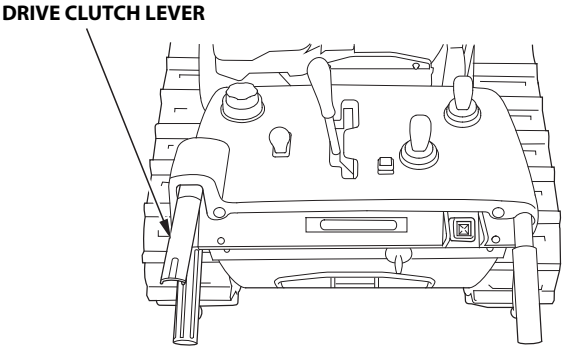

2. Set the main shift lever in the N (neutral) position.

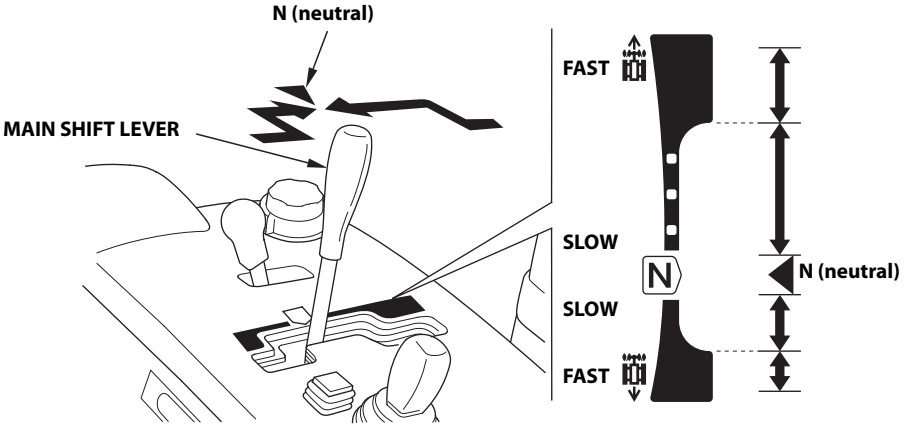

3. Move the throttle control lever to the SLOW position.

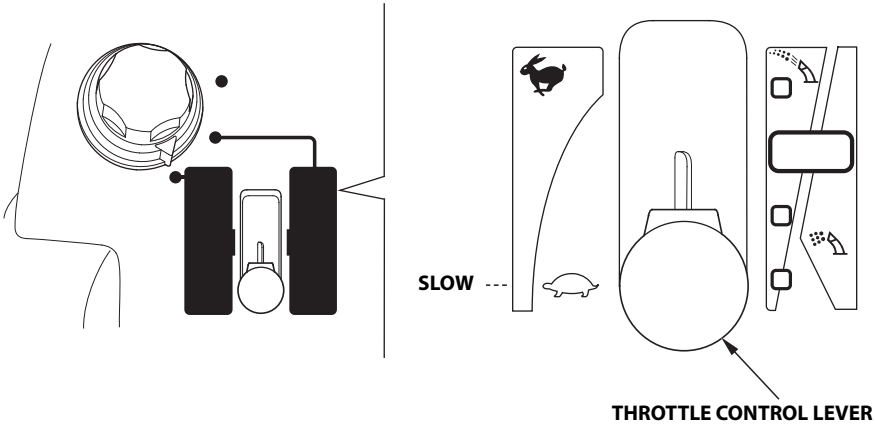

4. Operate the auger housing control switch until the snow blowing mechanism is resting on the ground firmly.

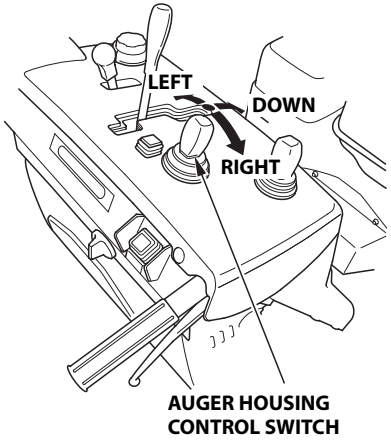

5. Turn the engine switch to the OFF position and remove the key.

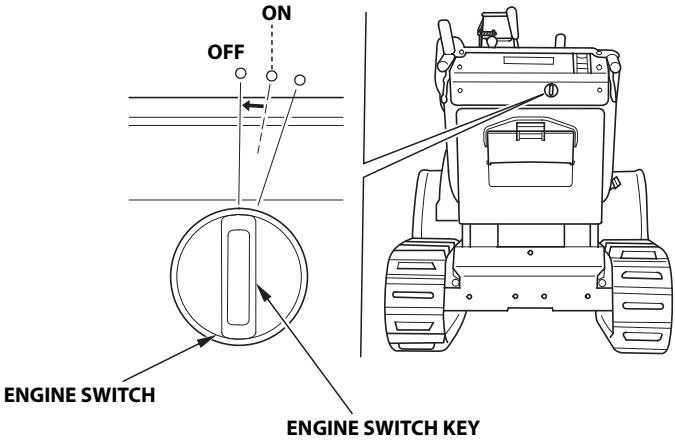

6. Turn the fuel valve lever to the OFF position.

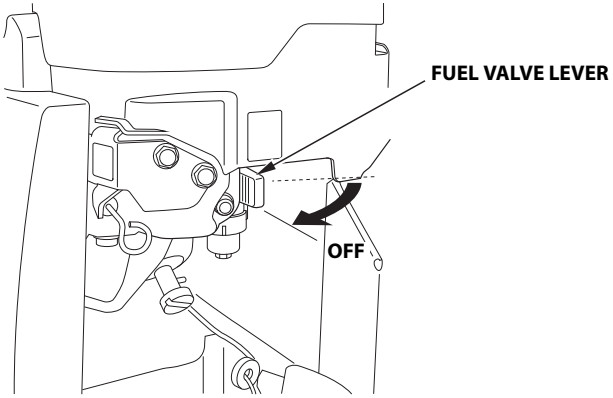

After operation, clean the snow off all parts of the snow blower and store the snow blower. Snow left on the snow blower may freeze, possibly damaging the snow blower and hindering operation the next time.

SERVICING YOUR SNOW BLOWER

THE IMPORTANCE OF MAINTENANCE

Good maintenance is essential for safe, economical, and trouble-free operation. It will also help reduce air pollution.

To help you properly care for your snow blower, the following pages include a maintenance schedule, routine inspection procedures, and simple maintenance procedures using basic hand tools. Other service tasks that are more difficult, or require special tools, are best handled by professionals and are normally performed by a Honda technician or other qualified mechanic.

The maintenance schedule applies to normal operating conditions. If you operate your snow blower under unusual conditions, consult your servicing dealer for recommendations applicable to your individual needs and use. Remember that your servicing dealer knows your snow blower best and is fully equipped to maintain and repair it.

⚠ WARNING

Failure to properly maintain this snow blower, or failing to correct a problem before operation, could result in a significant malfunction.

Some malfunctions can cause serious injuries or death.

Always follow the inspection and maintenance recommendations and schedules in this owner's manual.

To ensure the best quality and reliability, use only new, Honda Genuine parts or their equivalents for repair or replacement.

Maintenance, replacement, or repair of the emission control devices and systems may be performed by any engine repair establishment or individual, using parts that are "certified" to EPA standards.

MAINTENANCE SAFETY

Some of the most important safety precautions follow. However, we cannot warn you of every conceivable hazard that can arise in performing maintenance. Only you can decide whether or not you should perform a given task.

⚠ WARNING

Improper maintenance can cause an unsafe condition.

Failure to properly follow maintenance instructions and precautions can cause serious injuries or death.

Always follow the procedures and precautions in this owner's manual.

Safety Precautions

- Make sure the engine is off before you begin any maintenance or repairs. This will eliminate several potential hazards:
  - **Carbon monoxide poisoning from engine exhaust**
    Operate outside, away from open windows or doors.
  - **Burns from hot parts**
    Let the engine and exhaust system cool before touching.
  - **Injury from moving parts**
    Do not run the engine unless instructed to do so.
- Read the instructions before you begin, and make sure you have the tools and skills required.
- To reduce the possibility of fire or explosion, be careful when working around gasoline. Use only a nonflammable solvent, not gasoline, to clean parts. Keep cigarettes, sparks, and flames away from all fuel-related parts.

TOOL KIT

The tools necessary for performing some of the periodic maintenance, simple adjustments and repairs are supplied in the tool kit.

Spare shear bolts and nuts are also located in the tool kit.

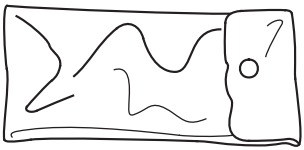

TOOL BAG



10 × 12mm BOX-END WRENCH



10 × 14mm WRENCH

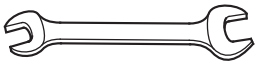

12 × 17mm WRENCH (2)



PLUG WRENCH HANDLE

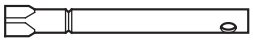

SPARK PLUG WRENCH

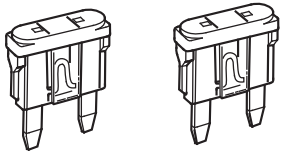

5 A 15 A

SPARE FUSE



SPARE FUSE COVER



PLIERS

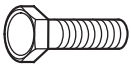

BLOWER SHEAR BOLT (5)

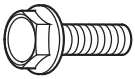

AUGER SHEAR BOLT (10)



8 mm SELF LOCK NUT (15)



COTTER PIN (2)

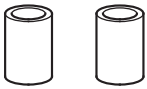

TUBE (2)
(for battery terminal covers)

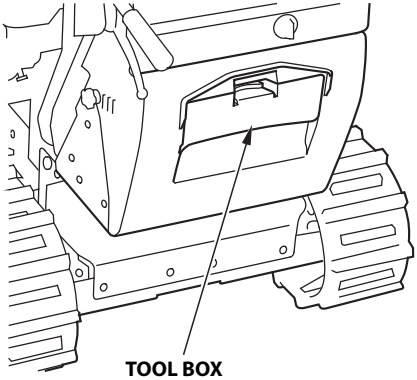

TOOL BOX

MAINTENANCE SCHEDULE

REGULAR SERVICE PERIOD (3) Perform at every indicated month or operating hour interval, whichever comes first. / Item		Each use	Every Year: Before operation	Every Year: Before storage	First month or 20 hrs.	Every 100 hrs.	Every 300 hrs.	Every 4 years	Page
Engine oil	Check level	o							83
	Change		o(1)		o	o(1)			84
Motor reduction gear oil	Check		o(2)						—
Auger transmission oil	Change	Every 2 years (2)							—
Battery electrolyte	Check level	o							94, 95
	Check level and specific gravity (Canadian model only)		o(1)(2)						95
Spark plug	Check-adjust		o(1)						87
	Replace						o	o	
Auger skid shoes and scraper	Check-adjust	o	o(1)						47
Track	Check-adjust		o(1)		o				89
Auger and blower shear bolts	Check	o							90
Bolts, Nuts, Fasteners	Check	o							41

(1) These parts may required more frequent inspection and replacement under heavy use.
(2) These items should be serviced by your servicing dealer, unless you have the proper tools and are mechanically proficient. Refer to the Honda shop manual for service procedures. See "Honda Publications" on page 138 for ordering information.
(3) For professional commercial use, log hours of operation to determine proper maintenance intervals.

Failure to follow this maintenance schedule could result in non-warrantable failures.

REGULAR SERVICE PERIOD (3) Perform at every indicated month or operating hour interval, whichever comes first. / Item		Each use	Every Year: Before operation	Every Year: Before storage	First month or 20 hrs.	Every 100 hrs.	Every 300 hrs.	Every 4 years	Page
Fuel sediment cup	Check			o					109
Fuel tank and carburetor	Drain			o					108
Anti corrosion oil	Apply oil			o					102
Chute cable	Check-adjust		o(1)(2)		o(1)(2)				—
Auger belt	Check-adjust		o(1)(2)(4)		o(1)(2)(4)				—
ACG belt	Check-adjust		o(1)(2)(4)		o(1)(2)(4)				—
Idle speed	Check-adjust		o(2)				o(2)		—
Valve Clearance	Check-adjust		o(2)				o(2)		—
Transmission (Canadian model only)	Grease		o(1)(2)						—
Combustion chamber	Clean	After every 1,000 hrs. (2)							—
Fuel tank and filter	Clean					o(2)		o(2)	—
Fuel tube	Check	Every 2 years (2)							—
	Replace							o(2)	—

(1) These parts may required more frequent inspection and replacement under heavy use.
(2) These items should be serviced by your servicing dealer, unless you have the proper tools and are mechanically proficient. Refer to the Honda shop manual for service procedures. See "Honda Publications" on page 138 for ordering information.
(3) For professional commercial use, log hours of operation to determine proper maintenance intervals.
(4) Check the belt for wear or damage. Replace the belt with a new one if it is worn or damaged.

Failure to follow this maintenance schedule could result in non-warrantable failures.

REFUELING

With the engine stopped, refill the tank if the fuel level is low. Do not fill above the maximum fuel level.

⚠ WARNING

Gasoline is highly flammable and explosive.

You can be burned or seriously injured when handling fuel.

- Stop the engine and let it cool before handling fuel.
- Keep heat, sparks, and flame away.
- Handle fuel only outdoors.
- Keep away from your vehicle.
- Wipe up spills immediately.

Refuel in a well-ventilated area before starting the engine. If the engine has been running, allow it to cool. Refuel carefully to avoid spilling fuel. Do not fill above the maximum fuel level. After refueling, tighten the fuel tank cap securely.

Never refuel the snow blower inside a building where gasoline fumes may reach flames or sparks. Keep gasoline away from appliance pilot lights, barbecues, electric appliances, power tools, etc.

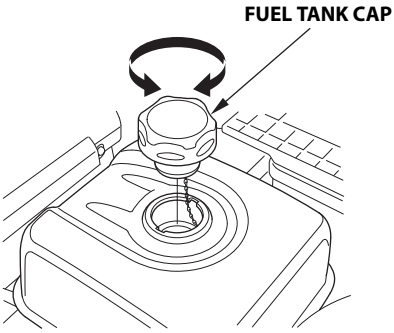

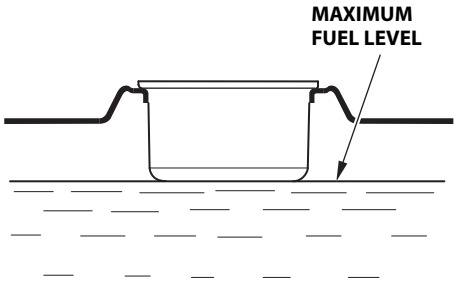

Refill the fuel tank from the right side (fuel tank side) of the snow blower.

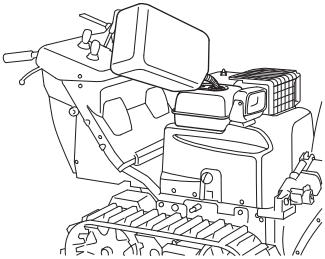

Spilled fuel is not only a fire hazard, it causes environmental damage. Wipe up spills immediately.

NOTICE

Fuel can damage paint and plastic. Be careful not to spill fuel when filling your fuel tank. Damage caused by spilled fuel is not covered under the Distributor's Limited Warranty (U.S.) / Distributor's Warranty (CA.).

FUEL RECOMMENDATIONS

Unleaded gasoline		
	U.S.	Pump octane rating 86 or higher
	Except U.S.	Research octane rating 91 or higher
		Pump octane rating 86 or higher

This engine is certified to operate on unleaded gasoline with a pump octane rating of 86 or higher (a research octane rating of 91 or higher).

You may use regular unleaded gasoline containing no more than 10% ethanol (E10) or 5% methanol by volume. In addition, methanol must contain cosolvents and corrosion inhibitors.

Use of fuels with content of ethanol or methanol greater than shown above may cause starting and/or performance problems. It may also damage metal, rubber, and plastic parts of the fuel system.

Engine damage or performance problems that result from using a fuel with percentages of ethanol or methanol greater than shown above are not covered under the *Distributor's Limited Warranty (U.S.) / Distributor's Warranty (CA.)*.

Never use gasoline that is stale, contaminated, or mixed with oil. Avoid getting dirt or water in the fuel tank.

If your equipment will be used on an infrequent basis, please refer to the fuel section of the *STORAGE* chapter (see page 106) for additional information regarding fuel deterioration.

ENGINE OIL LEVEL CHECK

Check the engine oil level with the engine stopped and in a level position.

1. Adjust the snowblower so that the bottom of the engine cover is horizontal seen from the side by adjusting the auger angle.
2. Remove the oil filler cap/dipstick and wipe it clean.
3. Insert and remove the dipstick without screwing it into the filler hole. Check the oil level shown on the dipstick.
4. If the oil level is low, fill with the recommended oil (see page 86) to the upper limit on the oil filler cap/dipstick.
5. Reinstall the oil filler cap/dipstick.



Adjust to be horizontal seen from the side by adjusting the auger angle.

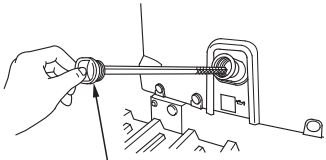

ENGINE OIL FILLER CAP/DIPSTICK

ENGINE OIL FILLER CAP/DIPSTICK

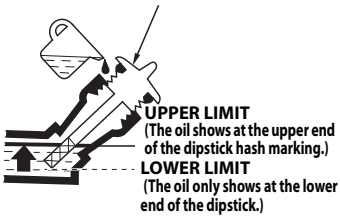

NOTICE

Running the engine with a low oil level can cause engine damage. This type of damage is not covered under the Distributor's Limited Warranty (U.S.) / Distributor's Warranty (CA.).

ENGINE OIL CHANGE

Drain the oil while the engine is still warm to assure rapid and complete draining.

1. Place a suitable container below the engine to catch the used oil, and then remove the oil filler cap/dipstick, 10 × 15 mm drain bolt, and sealing washer.

   To avoid loosening the 10 × 15 mm drain bolt extension, hold it with a 17 mm wrench while loosening the drain bolt with a 10 mm box-end wrench.

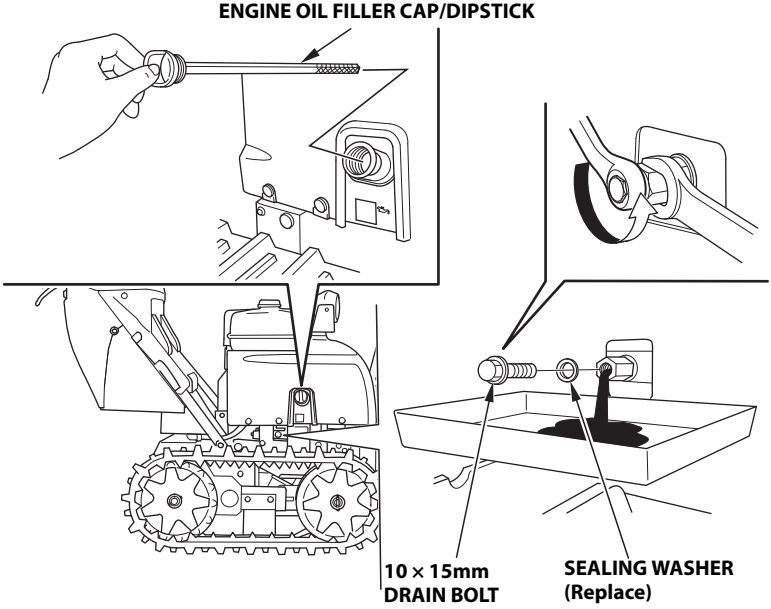

2. Allow the used oil to drain completely into an approved container, and then reinstall the 10 × 15 mm drain bolt with a new sealing washer, and tighten it securely.

   TORQUE: 13 lbf·ft (18 N·m, 1.8 kgf·m)

   NOTICE

   Improper disposal of engine oil can be harmful to the environment. If you change your own oil, please dispose of used motor oil properly. Put it in a sealed container, and take it to a recycling center. Do not throw it in the trash, pour it on the ground, or pour it down a drain.

3. Fill with new recommended oil up to the upper limit.

Engine oil capacity: 1.1 US qt (1.1 L, 1.0 Imp qt)

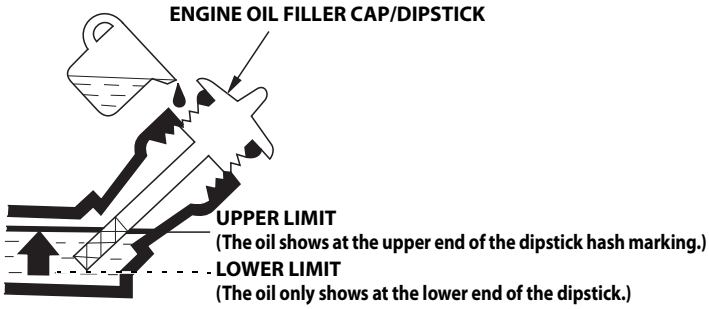

NOTICE

Running the engine with a low oil level can cause engine damage. This type of damage is not covered under the Distributor's Limited Warranty (U.S.) / Distributor's Warranty (CA.).

4. Screw in the oil filler cap/dipstick securely.

Wash your hands with soap and water after handling used oil.

ENGINE OIL RECOMMENDATIONS

Oil is a major factor affecting performance and service life. Use a 4-stroke automotive detergent oil.

SAE 5W-30 is recommended for general use.

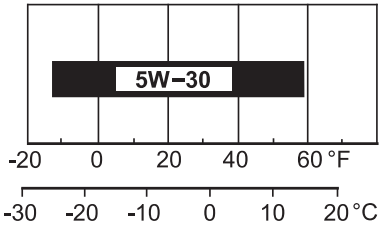

The SAE oil viscosity and API service category are in the API label on the oil container. Honda recommends that you use API service category SJ or later (or equivalent) oil.

SPARK PLUG SERVICE

Required spark plug: BPR5ES (NGK)
W16EPR-U (DENSO)

NOTICE

Use only the recommended spark plugs or equivalent. Spark plugs which have an improper heat range may cause engine damage.

To ensure proper engine operation, the spark plug must be properly gapped and free of deposits. If the engine has been running, the muffler will be very hot. Be careful not to touch the muffler.

1. Remove the spark plug cap.
2. Clean any dirt from around the spark plug base.
3. Use the spark plug wrench supplied in the tool kit to remove the spark plug.

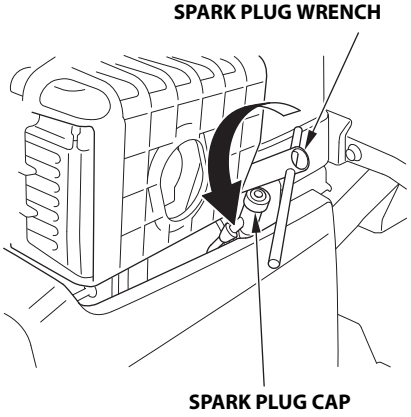

4. Inspect the spark plug. Replace it if the electrodes are worn or if the insulator is cracked, chipped, or fouled.

5. Measure the plug gap with a wire-type feeler gauge. Correct as necessary by carefully bending the side electrode.

   Spark plug gap:
   0.028—0.031 in (0.7—0.8 mm)

6. Make sure that the spark plug sealing washer is in good condition, and thread the spark plug in by hand to prevent cross-threading.

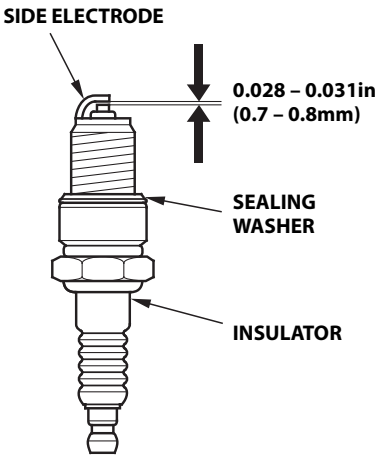

7. After the spark plug is seated, tighten with a spark plug wrench to compress the washer.

   If installing a new spark plug, tighten 1/2 turn after the spark plug seats to compress the washer. If reinstalling a used spark plug, tighten 1/8 to 1/4 turn after the spark plug seats.

   TORQUE: 13 lbf·ft (18 N·m, 1.8 kgf·m)

NOTICE

The spark plug must be securely tightened. An improperly tightened spark plug can become very hot and may damage the engine.

8. Attach the spark plug cap.

TRACK ADJUSTMENT

With the snow blower resting on its tracks, check track deflection by pressing down midway between the wheels with a force of 22 lbf (98 N, 10 kgf).
When correctly adjusted, track deflection should be:
5/8–51/64 in (16–20 mm)

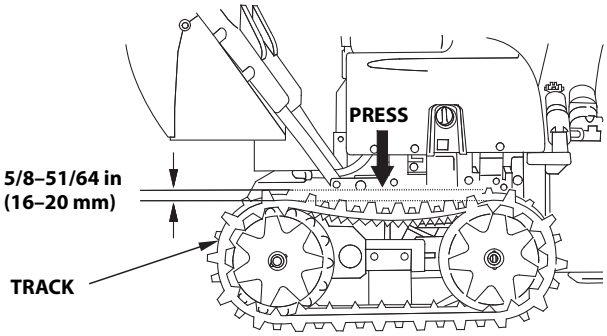

Adjusting Procedure

1. Loosen the lock nuts of the left and right tension bolt, and turn the adjusting nuts to correctly tension both tracks.
2. After adjustment, tighten the lock nuts securely.

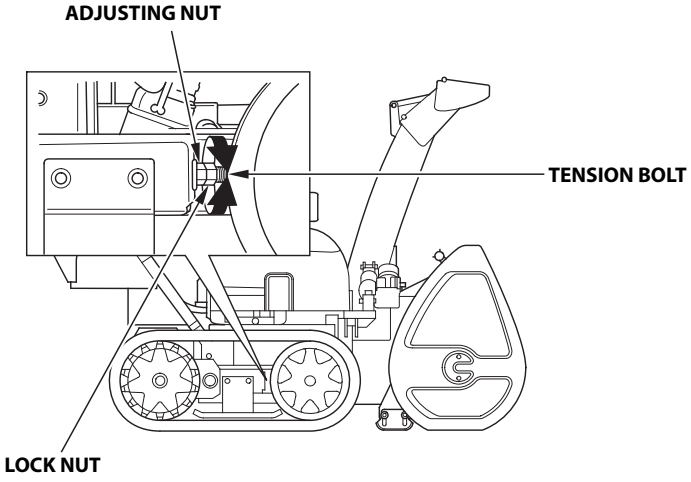

AUGER AND BLOWER INSPECTION

Check the auger, auger housing, blower, and shear bolts for signs of damage or other faults. If any of the shear bolts are broken, replace them with the ones furnished with the snow blower. Additional shear bolts and nuts are available from authorized Honda snow blower dealers.

NOTICE

Shear bolts are designed to break under force that would otherwise damage auger and blower parts. Do not replace shear bolts with ordinary hardware bolts.

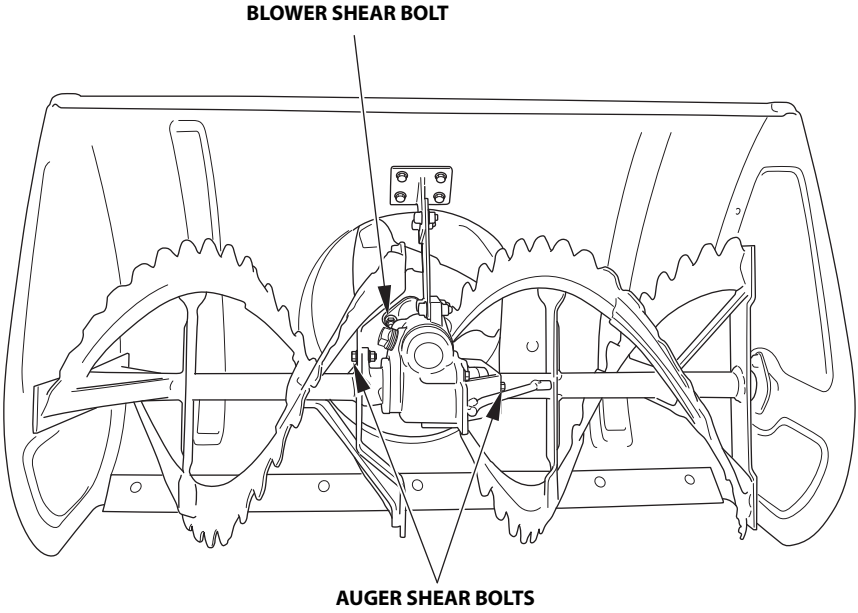

SHEAR BOLT REPLACEMENT PROCEDURE

1. Place the snow blower on a firm, level surface.
2. Make sure the auger clutch switch is in the OFF position.
3. Release the drive clutch lever.
4. Lower the auger to the lowest position with the auger housing control switch.
5. Turn the engine switch OFF, remove the engine switch key, and be sure that each rotating part comes to a complete stop.
6. Clean the auger and blower of snow, ice, or any other foreign particles.
7. Check the entire snow clearing mechanism.
8. Replace any broken shear bolts. Tighten securely.

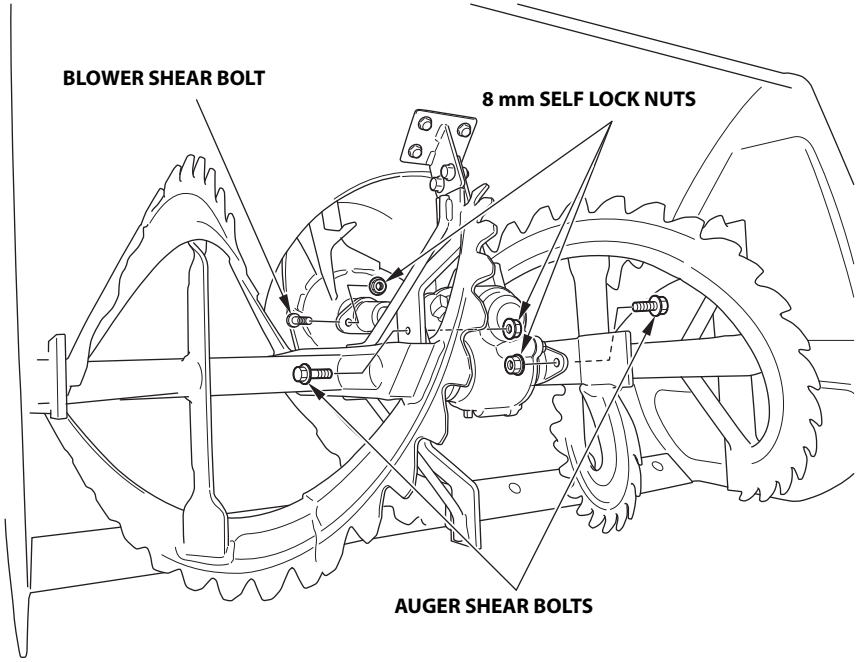

AUGER/BLOWER REPLACEMENT

The auger is subject to wear as it contacts the road surface and gravel if the skid shoes and scraper are improperly adjusted. A snow blower with a worn auger performs poorly. Replace a worn auger with a new one.

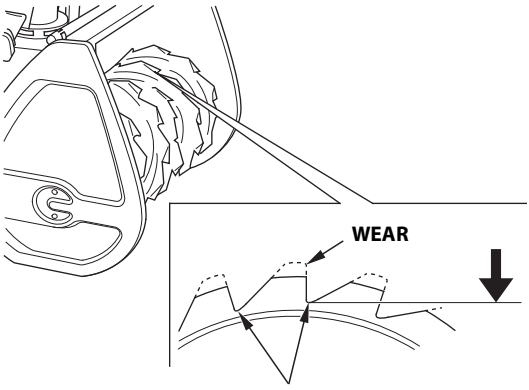

SERVICE LIMIT

The snow clearing performance decreases as the auger becomes worn.
Replace the auger with a new one if it is worn and shows the poor performance in catching the snow.
To prevent the early failure of the auger, do not let the auger contact the road surface.

⚠ WARNING

When the auger or blower is deformed, do not try to correct it with external force. That can cause cracks or failure, which may result in injuries.

- Replace the auger and blower with new ones if they contact the housing while turning, when the snow clearing performance becomes poor, or when the snow is not thrown far enough.
- Consult with your authorized Honda snow blower dealer for auger and blower replacement.

BATTERY SERVICE

Your snow blower's engine charging system charges the batteries while the engine is running. However, if the snow blower is only used periodically, the batteries must be charged monthly to maintain the battery service life.

⚠ WARNING

The batteries contain sulfuric acid (electrolyte), which is highly corrosive and poisonous.

Getting electrolyte in your eyes or on your skin can cause serious burns.

Wear protective clothing and eye protection when working near the batteries.

KEEP CHILDREN AWAY FROM THE BATTERY.

Emergency Procedures

Eyes — Flush with water from a cup or other container for at least fifteen minutes. (Water under pressure can damage the eye.) Immediately call 911 (where available) or a physician.

Skin — Remove contaminated clothing. Flush the skin with large quantities of water. Call a physician immediately.

Swallowing — Drink water or milk. Call your local Poison Control Center or a physician immediately.

Battery Electrolyte Level Check (USA model)

1. Remove the rear cover (see page 96) and check electrolyte level of the battery.
   If the battery electrolyte is low level, consult with your authorized Honda dealer.
   If the battery electrolyte is between the upper and lower levels, proceed to the next step.

2. Remove the batteries (see page 96) and check the test indicator's color by looking at the test indicator window on the battery. The label on the battery explains the test indicator's colors.
   If the test indicator's color does not show "OK", consult with your authorized Honda dealer.

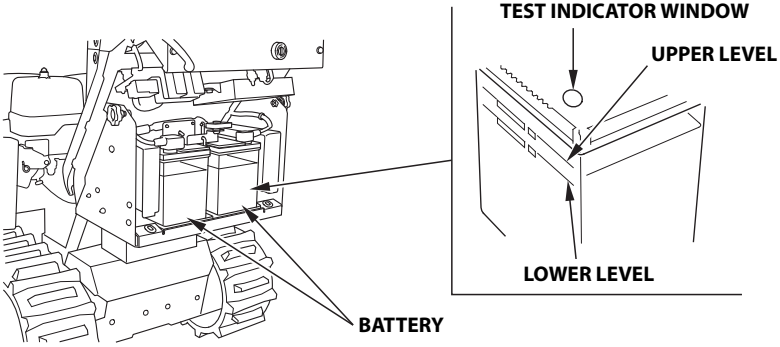

Any corrosion around the positive and negative terminals should be washed off with a solution of baking soda and warm water.
Dry the terminals and retighten the terminal bolts if necessary, and then coat the terminals with grease.

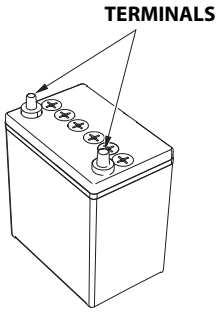

3. After checking the electrolyte level, reinstall the batteries (see page 98).

Battery Electrolyte Level Check (Canadian model)

1. Remove the rear cover (see page 96) and check whether the battery electrolyte is between the upper and lower levels.
   If the battery electrolyte is near or below the lower level, add the distilled water to the upper level.

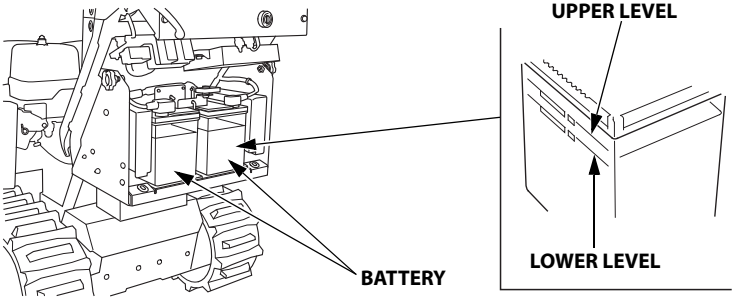

2. Remove the batteries (see page 96).
   Remove the caps of the battery, and then fill the battery with distilled water to the upper level line. Never overfill the battery.

NOTICE

- *Use only distilled water in the battery. Tap water will shorten the service life of the battery.*
- *Do not fill the battery beyond the UPPER LEVEL. If overfilled, electrolyte may overflow and corrode snow blower components. Immediately wash off any spilled electrolyte.*

Any corrosion around the positive and negative terminals should be washed off with a solution of baking soda and warm water.
Dry the terminals and retighten the terminal bolts if necessary, and then coat the terminals with grease.

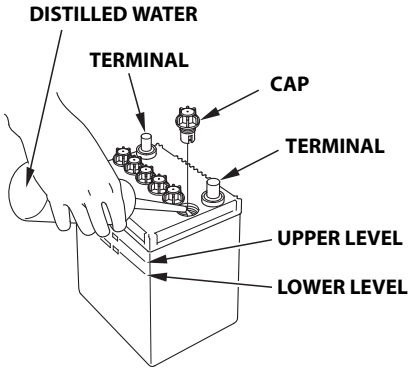

3. After checking the electrolyte level, reinstall the batteries (see page 98).

Battery Removal/Installation

WARNING: Battery posts, terminals, and related accessories contain lead and lead compounds. **Wash your hands after handling.**

1. Turn the engine switch to the OFF position and remove the key.
2. Loosen the two knobs, and then pull the rear cover away from the snow blower.

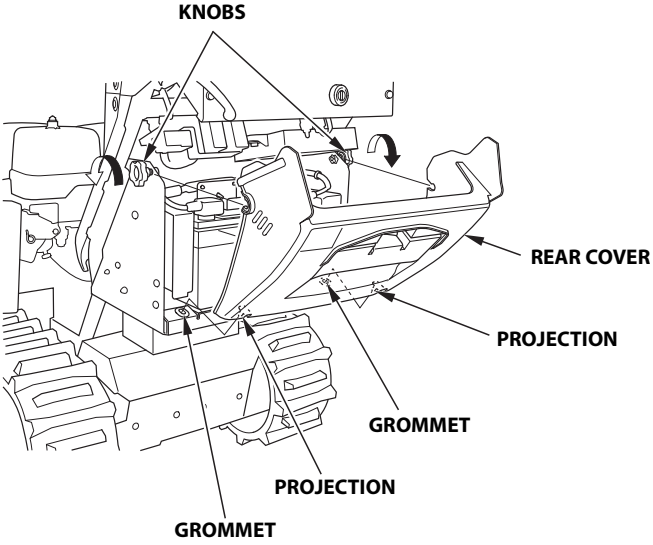

3. Disconnect the negative (—) cable at the battery A negative (—) terminal and put the tube on the terminal.

4. Disconnect the positive (+) cable at the battery B positive (+) terminal and put the tube on the terminal.

5. Loosen the nuts and lock nuts holding the battery set plate.

6. Disconnect the battery joint cable at the battery B negative (—) terminal and at the battery A positive (+) terminal.

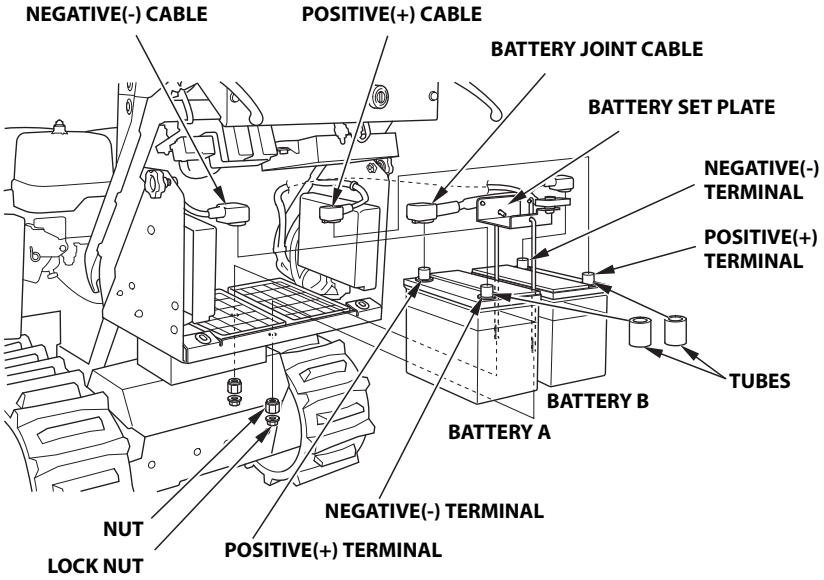

(Two 12V batteries are connected in series/24V)

7. Remove the battery and clean the battery terminals and battery cable terminals with a wire brush or sand paper.
   Clean the battery with a solution of baking soda and warm water with care not to get the solution or water in the battery cells. Dry the battery thoroughly.

8. Reinstall the batteries in their original position.

9. Connect one battery joint cable terminal at the battery A positive (+) terminal, and connect the other cable terminal at the battery B negative (—) terminal.

10. Reinstall the battery set plate and tighten the nuts.

11. Remove the tubes from the negative (—) post of battery A and the positive (+) post of battery B. Connect the positive (+) cable at the battery B positive (+) terminal, and then the negative (—) cable at the battery A negative (—) terminal.

12. Coat the battery terminals with terminal (dielectric) grease.

13. Reinstall the rear cover by aligning the grommets with the projections of the rear cover, and tighten the knobs securely.

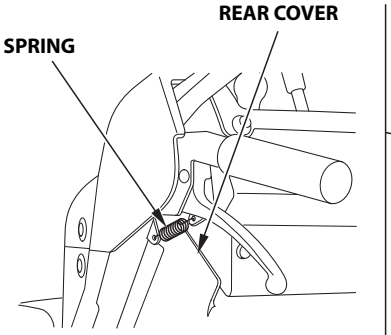

Install the upper side of the rear cover between the right and left springs.

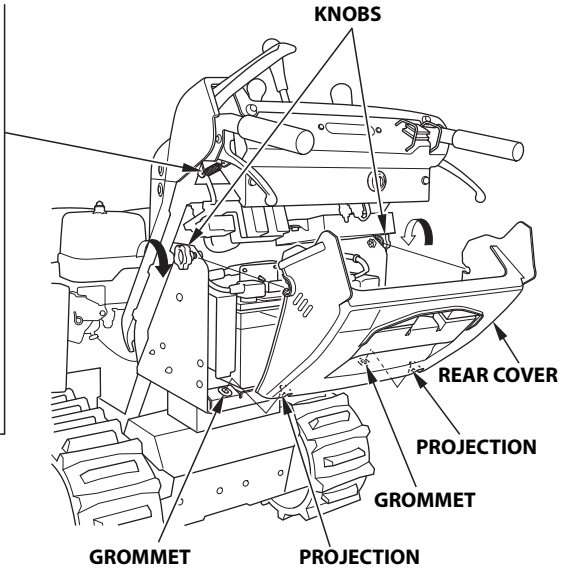

NOTICE

When disconnecting the battery cable, be sure to disconnect the battery negative (—) terminal first. Connect the positive (+) terminal first, then the negative (—) terminal. Never disconnect the battery cables in the reverse order; that could cause a short circuit if a tool contacts the terminals.

Battery Charging

⚠ WARNING

The battery will expel explosive hydrogen gas when overcharged.

A spark or flame can cause the battery to explode with enough force to kill or seriously hurt you.

Always use a regulated charger that provides the correct charging current to prevent overcharging.

Wear protective clothing and a face shield, or have a skilled mechanic perform the battery maintenance.

The snow blower is equipped with two 12 V batteries connected in series (24 V total). Recharge each battery separately if you use a 12 V battery charger.

The battery is rated at 35 Ah (Ampere-hours) for USA model / 30 Ah for Canadian model. Charging current should equal 10% of the battery's Ampere-hour rating. A battery charger should be used that can be adjusted to deliver 3.5 amps for USA model / 3.0 amps for Canadian model.
For the method of the battery charging, follow the charger instruction manual.

1. Connect the battery charger following the manufacturer's instructions.
2. Charge the battery 5—10 hours.
3. Clean the outside of the battery and the battery tray compartment with a solution of baking soda and water.

FUSE

In the event of fuse failure, locate the cause of failure and repair it before you continue operation. If the fuse continues to fail, discontinue snow blower use and consult an authorized Honda snow blower dealer.

NOTICE

Never use a fuse with a different rating from that specified. Serious damage to the electrical system or fire may result.

Block fuse replacement requires specific tools. Consult an authorized Honda snow blower dealer for replacement.

Fuse replacement (blade fuse only)

1. Remove the rear cover (see page 96).
2. Open the fuse box cover.
3. Replace the fuse as shown.
   Specified fuse: 5 A, 15 A, 30 A
4. Close the fuse box cover.
5. Reinstall the rear cover (see page 98).

BLOCK FUSE BOXES
(Consult with your authorized Honda snow blower dealer for replacement of these fuses.)

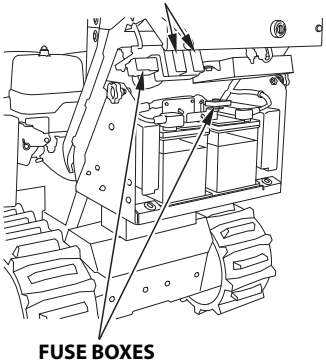

FUSE BOXES

(Blade fuses)

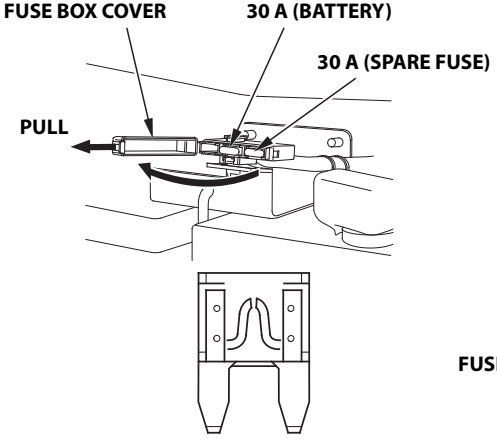

BLOWN BLADE FUSE

The 5 A and 15 A spare fuses are stored in the tool bag.

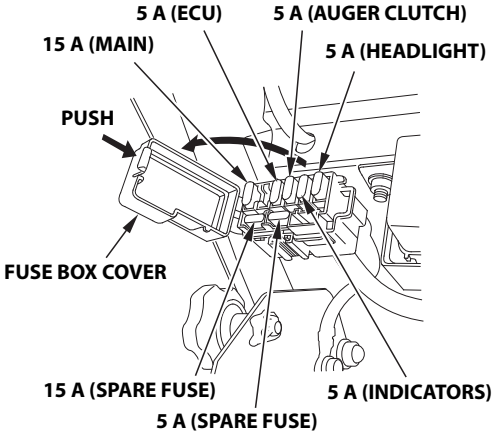

(Block fuses)

Consult with your authorized Honda snow blower dealer for replacement of the block fuse (charging and drive motors).

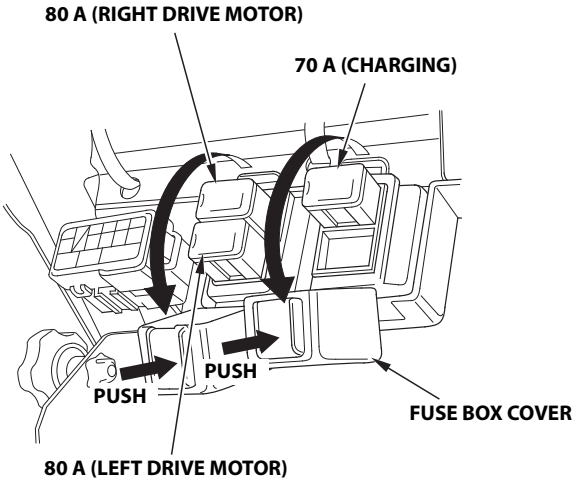

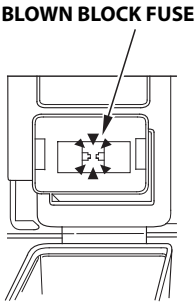

When a part of the snow blower does not operate:

- Check the fuse.
- If the fuse is normal, have your snow blower checked and repaired by your servicing dealer.

Operation check

Perform the following checks every year before initial operation in the season.

- Engine for secure start and stop
- Levers for operation
- Switches for operation
- Other moving parts for operation

STORAGE

STORAGE PREPARATION

Proper storage preparation is essential for keeping your snow blower trouble-free and looking good. The following steps will help to keep rust and corrosion from impairing your snow blower's function and appearance, and will make the engine easier to start when you use the snow blower again.

Cleaning

1. Rinse the auger housing and tracks with a garden hose. Wipe the rest of the snow blower with a moist rag.

2. After the snow blower has dried, touch up any damaged paint to prevent rust or corrosion.

3. Apply grease to the following areas for lubrication.

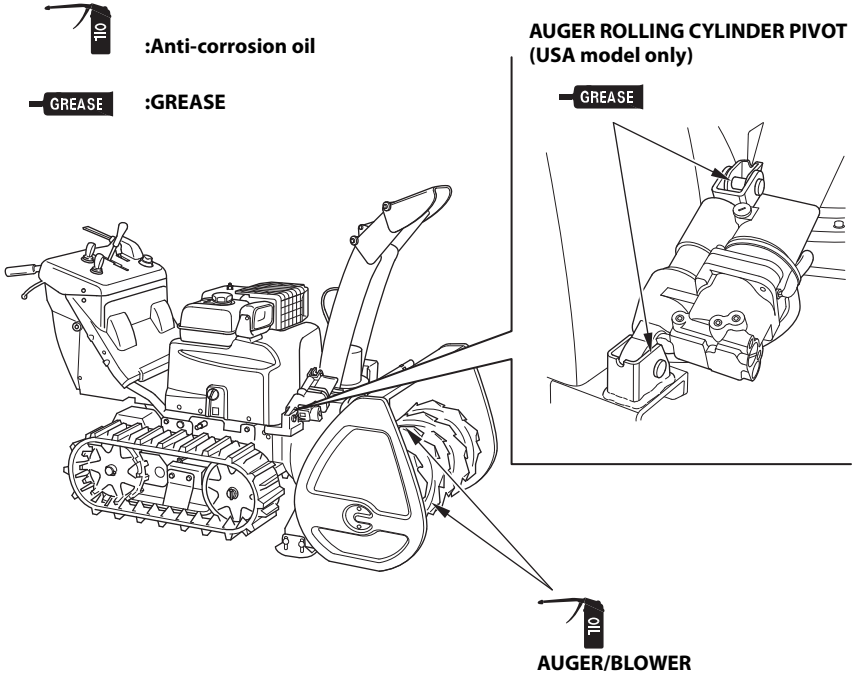

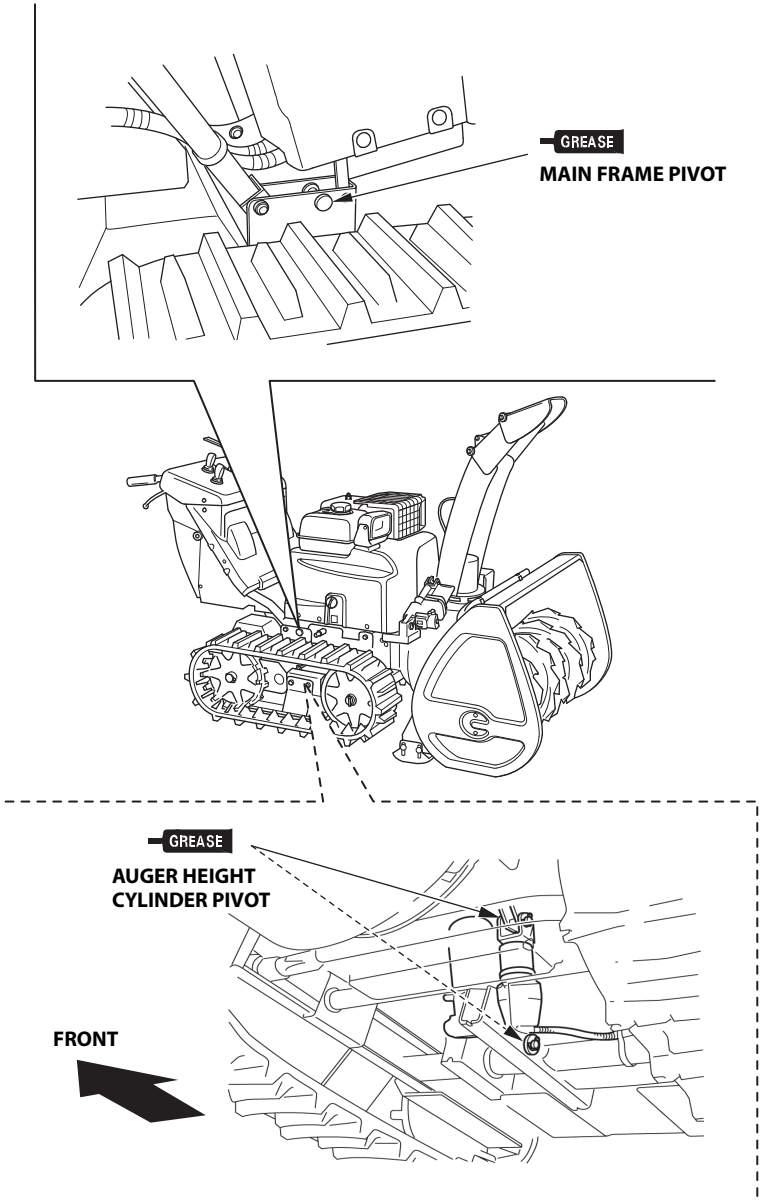
GREASE
MAIN FRAME PIVOT
GREASE
AUGER HEIGHT
CYLINDER PIVOT
FRONT

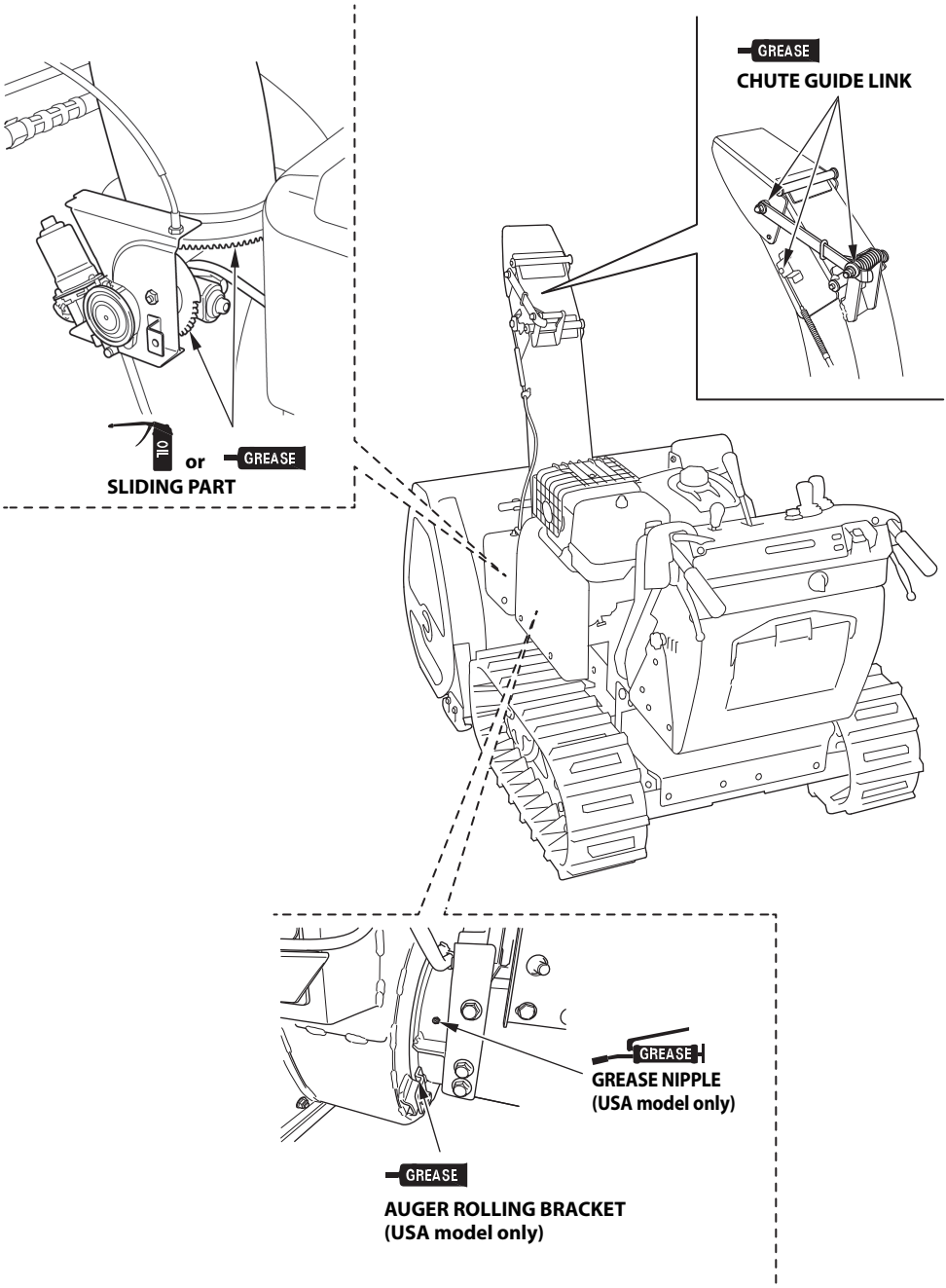
GREASE
CHUTE GUIDE LINK
OIL
or
GREASE
SLIDING PART
GREASE
GREASE NIPPLE
(USA model only)
GREASE
AUGER ROLLING BRACKET
(USA model only)

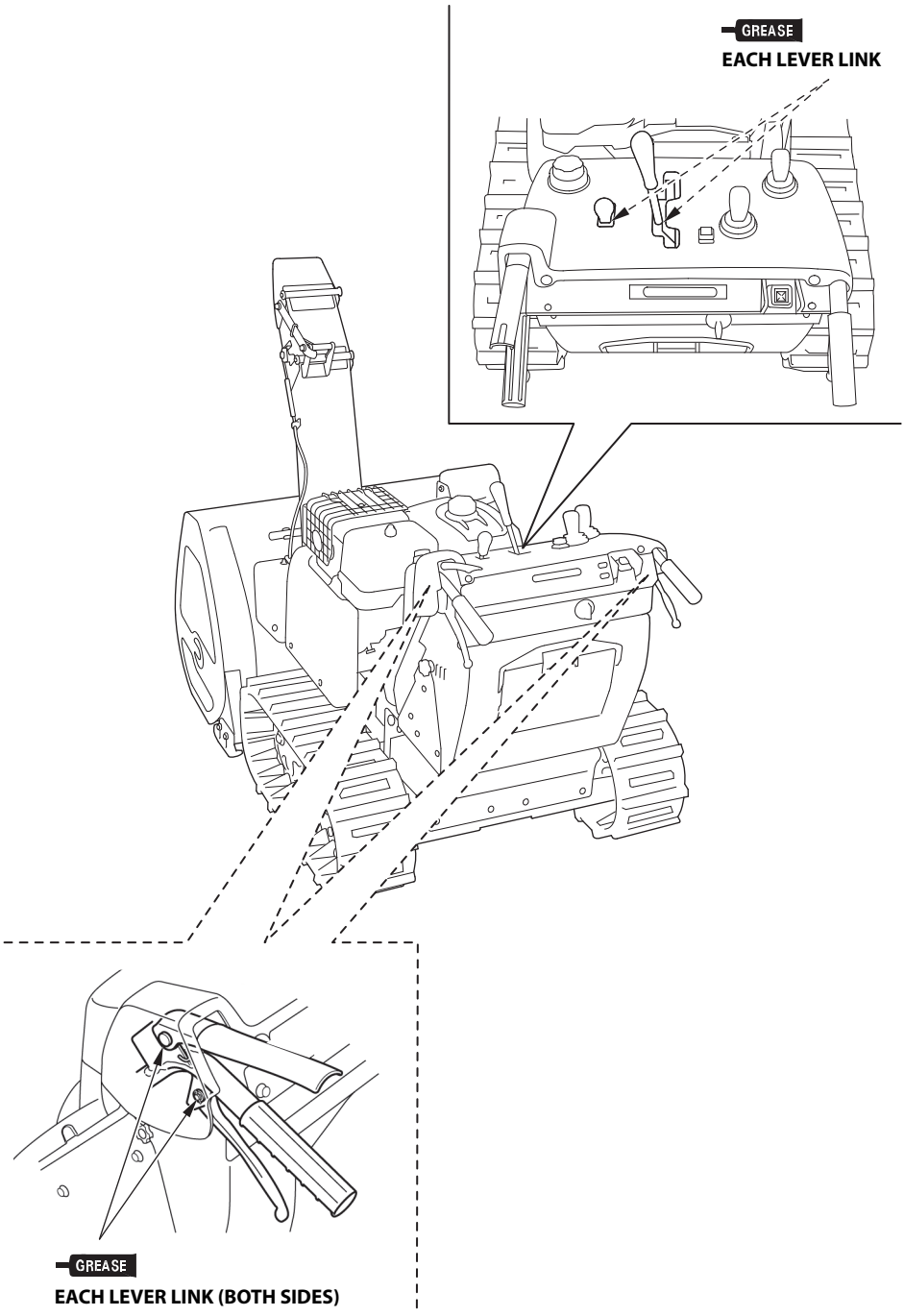
GREASE
EACH LEVER LINK
GREASE
EACH LEVER LINK (BOTH SIDES)

Fuel

NOTICE

Depending on the region where you operate your equipment, fuel formulations may deteriorate and oxidize rapidly. Fuel deterioration and oxidation can occur in as little as 30 days and may cause damage to the carburetor and/or fuel system. Please check with your servicing dealer for local storage recommendations.

Gasoline will oxidize and deteriorate in storage. Old gasoline will cause hard starting, and it leaves gum deposits that clog the fuel system. If the gasoline in your snow blower deteriorates during storage, you may need to have the carburetor and other fuel system components serviced or replaced.

The length of time that gasoline can be left in your fuel tank and carburetor without causing functional problems will vary with such factors as gasoline blend, your storage temperatures, and whether the fuel tank is partially or completely filled. The air in a partially filled fuel tank promotes fuel deterioration. Very warm storage/temperatures accelerate fuel deterioration. Fuel deterioration problems may occur within a few months, or even less if the gasoline was not fresh when you filled the fuel tank.

The *Distributor's Limited Warranty (U.S.) / Distributor's Warranty (CA.)* does not cover fuel system damage or engine performance problems resulting from neglected storage preparation.

You can extend fuel storage life by adding a fuel stabilizer that is formulated for that purpose, or you can avoid fuel deterioration problems by draining the fuel tank and carburetor.

Adding a Fuel Stabilizer to Extend Fuel Storage Life
When adding a fuel stabilizer, fill the fuel tank with fresh gasoline. If only partially filled, air in the tank will promote fuel deterioration during storage. If you keep a container of gasoline for refueling, be sure that it contains only fresh gasoline.

Add fuel stabilizer following the manufacturer's instructions.

After adding a fuel stabilizer, run the engine outdoors for 10 minutes to be sure that treated gasoline has replaced the untreated gasoline in the carburetor.

Stop the engine, and move the fuel valve lever to the OFF position.

Draining the Fuel Tank and Carburetor

⚠ WARNING

Gasoline is highly flammable and explosive.

You can be burned or seriously injured when handling fuel.

- Stop the engine and let it cool before handling fuel.
- Keep heat, sparks, and flame away.
- Handle fuel only outdoors.
- Keep away from your vehicle.
- Wipe up spills immediately.

1. Drain all gasoline from the fuel tank into an approved gasoline container. We recommend using a commercially available gasoline hand pump to empty the tank. Do not use an electric pump.

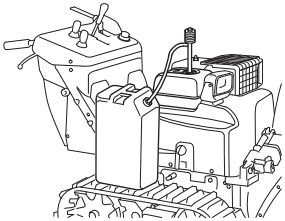

2. Turn the fuel valve lever to the ON position.
3. Loosen the carburetor drain knob and drain the gasoline into a suitable container.
4. After draining, tighten the drain knob and turn the fuel valve OFF.

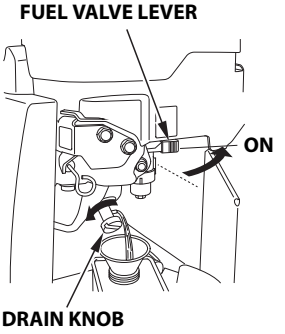

5. Remove the fuel sediment cup, O-ring and filter.

6. Empty the contents into a suitable container. Clean the fuel sediment cup and filter in nonflammable or high flash point solvent.

7. Reinstall the filter, new O-ring, and sediment cup.
   - Install the filter by aligning with the groove on the carburetor side as shown in the following illustration.

8. Tighten the sediment cup securely.

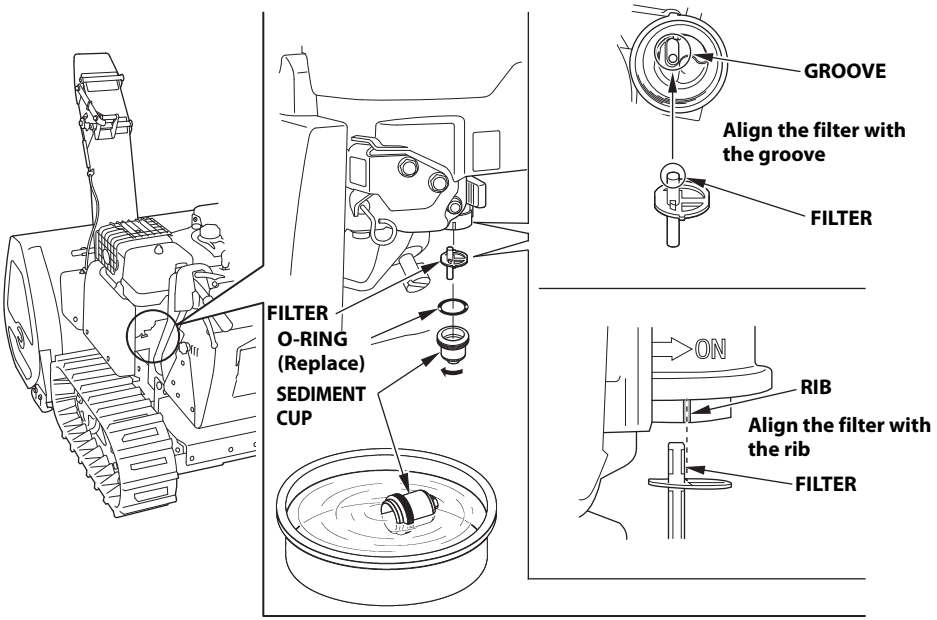

STORAGE

Engine Oil
Change the engine oil (see page 84).

Engine Cylinder
1. Remove the spark plug (see page 87).

2. Pour 1—2 teaspoons (5—10 cm^3) of clean engine oil into the cylinder.

3. Rotate the engine a few revolutions to distribute the oil in the cylinder.

4. Reinstall the spark plug.

Battery
If the snow blower will be stored for an extended period, disconnect the negative terminal from battery A. Remove the batteries and recharge them every 6 months and every year before operation and storage, or if the battery voltage ever drops below 12.9V.

Check both batteries' electrolyte level (see page 94, 95).

Charge the batteries (see page 99).

STORAGE PRECAUTIONS

If your snow blower will be stored with gasoline in the fuel tank and carburetor, it is important to reduce the hazard of gasoline vapor ignition. Select a well-ventilated storage area away from any appliance that operates with a flame, such as a furnace, water heater, or clothes dryer. Also avoid any area with a spark-producing electric motor, or where power tools are operated.

If possible, avoid storage areas with high humidity, because that promotes rust and corrosion.

Unless all fuel has been drained from the fuel tank, leave the fuel valve in the OFF position to reduce the possibility of fuel leakage.

Place the snow blower on a level surface. Tilting can cause fuel or oil leakage.

With the engine and exhaust system cool, cover the snow blower to keep out dust. A hot engine and exhaust system can ignite or melt some materials. Do not use a plastic sheet as a dust cover. A nonporous cover will trap moisture around the engine, promoting rust and corrosion.

REMOVAL FROM STORAGE

Check your snow blower as described in the *BEFORE OPERATION* chapter (see page 41) of this manual.

If the fuel was drained during storage preparation, fill the tank with fresh gasoline. If you keep a container of gasoline for refueling, be sure that it contains only fresh gasoline. Gasoline oxidizes and deteriorates over time, causing hard starting.

If the cylinder was coated with oil during storage preparation, the engine may smoke briefly at startup. This is normal.

TRANSPORTING

BEFORE LOADING

1. Loading the snow blower on a truck or trailer should be performed on a firm, level surface.

2. Use a loading ramp that is strong enough to support the combined weight of the snow blower and the operator:

   Weight of snow blower: (Operating weight)

   USA model: 573 lbs (260 kg)
   Canadian model: 250 kg (551 lbs)

3. The loading ramp must be long enough so that its slope is 15° (26%) or less. Recommended ramp lengths are shown in the following table:

Length of Ramp (L)	8.2 ft (2.5 m)	9.8 ft (3.0 m)	11.5 ft (3.5 m)
Height (H)	1.6 ft (50 cm)	2.0 ft (60 cm)	2.3 ft (70 cm)

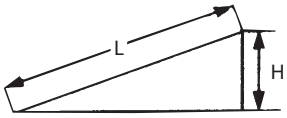

4. If the truck bed has a low roof or cover, with less than 5 ft (1.5 m) of headroom, lower the discharge deflector for better clearance, or remove the chute assembly.

5. Check that there is sufficient fuel in the tank. The engine may stall on the ramp if there is not enough fuel in the tank.

LOADING

⚠ WARNING

Spilled fuel may ignite. To avoid fuel and oil spillage, keep the snow blower level when transporting.

1. Start the engine and raise the auger fully by operating the auger control switch. Lower the chute guide fully by operating the chute control switch.
2. Before backing up the loading ramp, adjust the position and angle of the travelling direction of the snow blower so that the snow blower is in direct alignment with the loading ramp.
3. Set the main shift lever in the SLOW RANGE, and back the snow blower up the loading ramp at a slow speed.
   Use reverse gear to back the snow blower up the ramp. Use extreme care not to hit the dischage chute against the hood or any other parts of the truck.

⚠ WARNING

Do not operate the steering lever while backing the snow blower up the loading ramp; serious personal injury or damage to the snow blower could result.

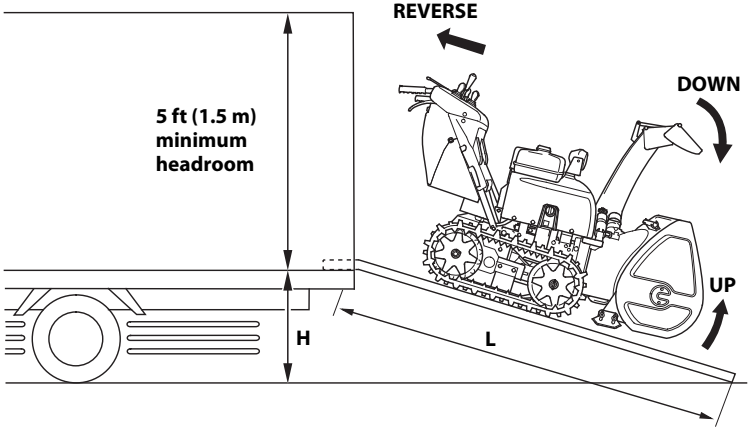

NOTICE

Do not hang the snow blower.
Hanging the snow blower could cause damage.

4. After the snow blower is in the truck, stop the engine, and turn the fuel valve to the OFF position. This will prevent the possibility of carburetor flooding and will reduce the possibility of fuel leakage.

5. Tie the snow blower down with rope or straps, and block the treads. Keep the tie-down rope or straps away from controls, wire harness, and cables.

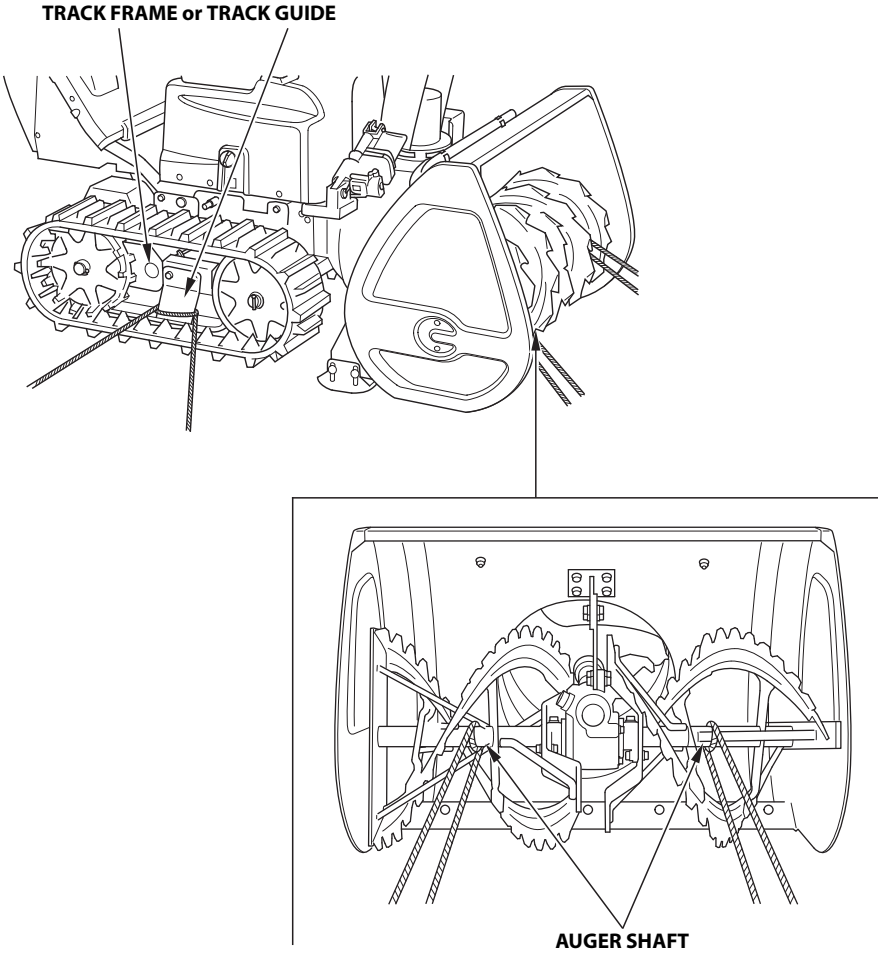

6. Unload the snow blower in the reverse order of loading.

TAKING CARE OF UNEXPECTED PROBLEMS

ENGINE WILL NOT START

Electric starter does not operate

Possible cause	Correction
Battery connections loose or corroded.	Clean and tighten battery connections (page 97).
Batteries discharged.	Recharge batteries (page 99).
Fuse(s) blown.	Replace fuse(s)(page 100).
Oil indicator comes on. Low engine oil level.	Add oil.

Starter operates, but engine will not start

Possible cause	Correction
Drive clutch lever is squeezed.	Release the drive clutch lever (page 72).
Auger clutch switch is ON position.	Turn the auger clutch switch to the OFF position (page 25).
Fuel valve lever is OFF. Sediment cup obstructed.	Turn fuel valve lever to ON (page 44). Check for contaminants in sediment cup (page 109).
Stale or old fuel.	Be sure tank has fresh fuel. Drain carburetor and sediment cup (page 108).
Spark plug cap off. Improper electrode gap or deposits in the spark plug gap.	Make sure cap is connected. Verify that spark plug is free of deposits, and has proper gap (page 88).
Auto choke system is stuck from a foreign material (ice, etc.).	Push the manual start lever (page 45).

If the engine still does not start, take the snow blower to your servicing dealer.

- If the drive control warning indicator (orange) comes on and blinks during driving and it does not go off after restarting the engine, have your snow blower checked by your servicing dealer promptly.
- If the drive control warning indicator (red) blinks during driving, move the snow blower to a safe place and stop the engine. Wait for a while and restart the engine. The snow blower is normal if the drive control indicator goes off after the engine starts. If it does not, have your snow blower checked by your servicing dealer.

SELF-DIAGNOSIS FUNCTION

When a problem occurs

When a problem occurs to the snow blower during running, the drive control warning indicator (orange) repeatedly blinks a number that corresponds to the type of problem. Turn the engine switch to the STOP position and turn it to the ON position again. If the snow blower is faulty, the drive control warning indicator (red) comes on and the drive control warning indicator (orange) repeats blinking the number that corresponds to the type of problem (see pages 118 and 119).

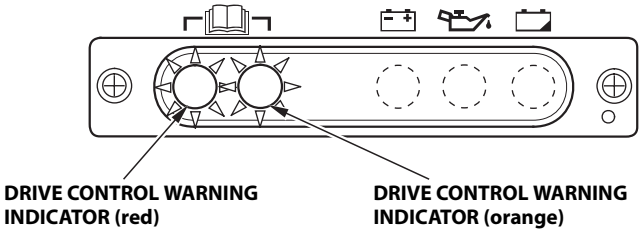

The drive control warning indicator (orange) indicates the symptom by different blinking patterns.
There are three blinking patterns as indicated below.

[Warning indicator light blinks fast 1 to 9 times periodically]
The blinking pattern is 0.3-second on then 0.3-second off. The indicator light blinks the number of times corresponding to the symptom, pauses for 2.1 seconds and repeats the cycle again.
Example: When the indicator light blinks fast twice periodically

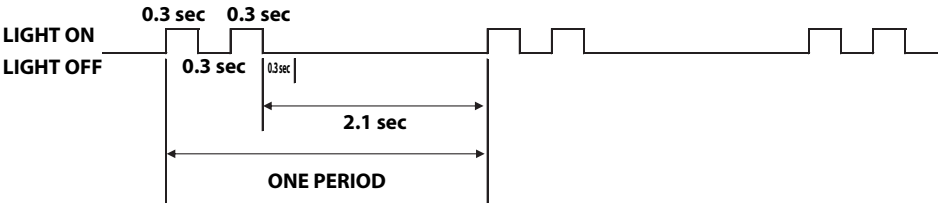

[Warning indicator light keeps blinking slowly]
The blinking pattern is 1.2-second on then 2.1-second off. Then it repeats the cycle again.

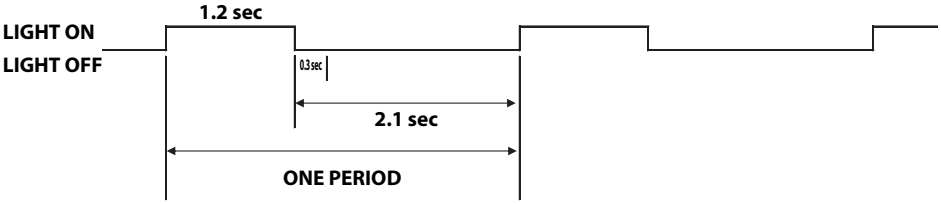

[Warning indicator light blinks fast 1 to 4 times after blinking slowly once periodically]
The indicator light comes on for 1.2 seconds and goes off for 0.6 seconds, then it blinks in a pattern of 0.3-second on then 0.3-second off the number of times corresponding to the symptom. After that, it pauses for 2.1 seconds and repeats the cycle starts with a slow blink again.
Example: When the indicator light blinks fast twice after blinking slowly once periodically

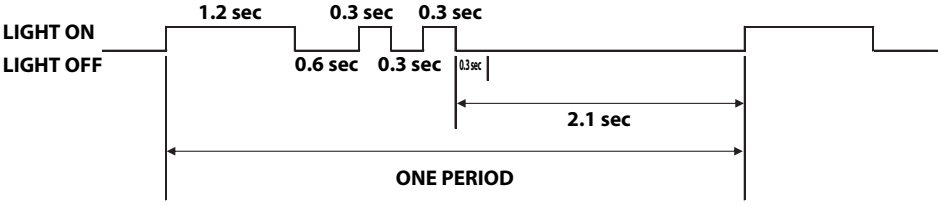

Check whether the drive control warning indicator (orange) comes on and check the number of blinks.

Failure diagnosis

WARNING INDICATOR (RED)	WARNING INDICATOR (ORANGE)/ BLINKING TIMES	SYMPTOM	POSSIBLE CAUSE	REMEDY
Light on Continuously	Light off	Indicator light failure or main ECU failure	Indicator light failure or main ECU failure	Consult with your authorized Honda dealer.
	Fast blink 2 times	Main ECU error	Main ECU failure.	
	Fast blink 3 times	Main shift lever angle sensor error	Main shift lever angle sensor open or short circuit.	
		Right steering lever angle sensor error	Right steering lever angle sensor open or short circuit.	
		Left steering lever angle sensor error	Left steering lever angle sensor open or short circuit.	
		Drive clutch switch error	Drive clutch switch open or short circuit.	
		Auger clutch switch error	Auger clutch switch open or short circuit.	
	Fast blink 4 times	Driver error-Right	Open or short circuit of right driver communication circuit.	
			Right driver failure.	
	Fast blink 5 times	Motor error-Right	Right motor mechanical failure.	
			Right motor or driver failure.	
			Right motor sensor open or short circuit.	
	Fast blink 6 times	Driver error-Left	Open or short circuit of left driver communication circuit.	
			Left driver failure.	
	Fast blink 7 times	Motor error-Left	Left motor mechanical failure.	
			Left motor or driver failure.	
			Left motor sensor open or short circuit.	

Failure diagnosis (continued)

WARNING INDICATOR (RED)	WARNING INDICATOR (ORANGE)/ BLINKING TIMES	SYMPTOM	POSSIBLE CAUSE	REMEDY
Light on Continuously	Fast blink 8 times	Electromagnetic brake error	Electromagnetic brake open or short circuit.	Consult with your authorized Honda dealer.
		Auger clutch error	Auger clutch disconnection or short circuit.	
	Slow blink once*1	Battery voltage drop (16 V or lower)	Battery is dead. Or ACG failure or ACG fuse blown.	
	Slow blink once, fast blink once	Motor temperature error	Motor overheat due to overload.	Stop the engine, wait 5 min. Restart.*2
	Slow blink once, fast blink 2 times	Motor temperature detection error	Motor temperature sensor disconnection or short circuit.	Consult with your authorized Honda dealer.
	Slow blink once, fast blink 3 times	Throttle control lever angle sensor error	Throttle control lever angle sensor disconnection or short circuit.	
	Slow blink once, fast blink 4 times	Communication trouble between main ECU and engine ECU	Disconnection or short circuit of engine ECU communication circuit.	
		Engine ECU error	Engine ECU failure.	

*1: The battery indicator blinks.

*2: Consult with your authorized Honda snow blower dealer if the drive control warning indicator (orange) keeps blinking after restarting the engine.

If you notice any abnormality with the snow blower, consult with your authorized Honda snow blower dealer.

Blinking (green) of reset button indicator (USA model only)

Indicator (green)	SYMPTOM	POSSIBLE CAUSE	REMEDY
Blink	Reset operation failure of auger housing	Height sensor wire broken or short circuit. Roll sensor wire broken or short circuit.	Consult with your authorized Honda dealer.

(1)Engine does not start.

SYMPTOM	POSSIBLE CAUSE	REMEDY
Fuel is not reaching the carburetor.	There is no gasoline in the fuel tank.	Refuel (see page 81).
	Fuel valve lever is not opened.	Turn the fuel valve lever to the ON position (see page 44).
	Fuel filter is clogged.	Consult an authorized Honda dealer.
	Fuel pipe arrangement is frozen.	
Fuel is reaching the carburetor.	Carburetor is flooded.	
	Carburetor is clogged.	
	Gasoline spoiled.	
	Gasoline contains water.	
Oil indicator (red) is on.	No or low oil level.	Check the engine oil level and add oil to the upper level if necessary (see page 83).
Starter motor does not operate.	Batteries are dead.	Charge the batteries or replace (see pages 96 and 99).
	Fuse is blown.	Replace the fuse (see page 100).
	Battery terminal is disconnected.	Connect the battery terminal (see page 98).
	Starter is abnormal or faulty.	Consult an authorized Honda dealer.
	Drive clutch lever is squeezed or auger clutch switch is pressed when starting.	Release the drive clutch lever and do not press the auger clutch switch (see page 72).

(1)Engine does not start. (continued)

SYMPTOM	POSSIBLE CAUSE	REMEDY
Starter motor operates.	Fouled spark plug.	Consult an authorized Honda dealer.
	Loose spark plug cap.	Install the spark plug cap securely (see page 87).
	Spark plug is damaged.	Replace the spark plug (see page 87).
	Frozen auto choke system.	Auto choke malfunction can be suspected. Restart the engine by operating the manual start lever (see page 45).
	Drive control warning indicator (red) is on.	Turn the engine switch to the OFF position and turn it to the ON position again. If the indicator comes on again, the starter motor can be faulty. Consult with your authorized Honda snow blower dealer.

(2)Engine runs poorly.

SYMPTOM	POSSIBLE CAUSE	REMEDY
Hard to drive the snow blower in forward direction.	Auger shear bolt is broken.	Replace the auger shear bolt (see page 91).
	Auger height is not properly adjusted.	Auger height adjustment (see page 50).
	Snow is clogged in the snow blowing mechanism.	Use the snow clearing bar to remove the snow (see page 71).
Snow blower does not run.	Drive motor overheated by operation under excessive load, which armed the protection function.	Release the drive clutch lever, stop the work, keep the engine switch in the ON position and wait until the drive control warning indicator (orange) does not blink (see page 65).
Snow blower runs slowly.	To prevent malfunction resulting from drive motor overheating, the drive power is reduced.	Release the drive clutch lever, stop the work, keep the engine switch in the ON position and wait until the drive control warning indicator (orange) does not blink (see page 65).
Hard to drive the snow blower in reverse direction.	Auger height is not adjusted in the HIGH position.	Auger height adjustment (see page 50).
Snow blower does not move when squeezing the drive clutch lever.	Wheel pin in the track has worked off.	Consult an authorized Honda dealer.
	Warning indicator (orange) blinks or comes on.	Check the drive control warning indicator (orange) for the number of blinks (see pages 118 and 119). Consult with your authorized Honda dealer.*1
Steering lever does not work at all (or it does not work well).	Snow blowing mechanism is buried in deep snow.	Lift up the snow blowing mechanism. Operate the main shift lever to the slower position, squeeze the steering lever and apply some force on the handle to turn in the direction you want.
	Track does not stop or become slower when squeezing the steering lever.	Steering lever sensor or drive motor might be faulty. Consult an authorized Honda dealer.

(2)Engine runs poorly. (continued)

SYMPTOM	POSSIBLE CAUSE	REMEDY
Hard to make a turn on the spot.	Main shift lever is not set in the slow speed position.	Set the main shift lever in the Forward slow speed position and squeeze the steering lever fully (see page 63).
	Steering lever was not squeezed enough.	
Battery mode does not work.	Battery run mode has not been turned on.	Squeeze both the right and left steering levers for 3 seconds simultaneously (see page 66).
	Drive control warning indicators (red and orange) are on at 5 seconds after driving the snow blower with the battery power.	Turn the engine switch to the OFF position and operate battery run mode once again (see page 66).
	Battery is dead.	Charge the battery or replace it if necessary (see pages 96 and 99).
Warning indicator (orange) blinks or comes on.	Electric equipment is abnormal, or broken.	Check the drive control warning indicator (orange) for the number of blinks (see pages 118 and 119). Consult with your authorized Honda dealer.*1

*1: Tell your authorized Honda snow blower dealer about the number of blinks of the drive control warning indicator (orange).

- It is difficult to operate the snow blower in deep, soft snow.
  Drive the snow blower at a slow speed to avoid slipping or push and pull the handle to get out of deep, soft snow.
- Leaving the engine switch in the ON position will discharge the battery, and the engine will not start.
  After operating the battery run mode, make sure you always turn the engine switch to the OFF position.
- When consulting an authorized Honda dealer, make sure to inform him or her of the number of times the warning indicator (orange) blinks.

(3)Does not clear snow well.

SYMPTOM	POSSIBLE CAUSE	REMEDY
Hard to drive the snow blower in the forward direction while clearing the snow.	Auger shear bolt is broken.	Replace the auger shear bolt (see page 91).
	Auger housing height is not adjusted properly.	Adjust the auger housing height in the proper position (see page 50).
	Snow is stuck in the auger and the related parts of the snow blower.	Remove the snow from the underside of the auger housing (see page 71).
Snow does not come out from the snow discharge chute.	Snow discharge chute is clogged.	Use the snow clearing bar and remove the snow from the snow discharge chute (see page 71).
Hard to collect the snow to clear.	Snow is stuck on the auger.	Remove the snow from the auger and the related parts (see page 71).
Blower does not rotate.	Blower shear bolt is broken.	Replace the blower shear bolt (see page 91).
	Drive motor overheated by operation under excessive load, which armed the protection function.	Release the drive clutch lever and stop the work. Keep the engine switch in the ON position and wait until the drive control warning indicator (orange) does not blink (see page 65).
	Auger clutch switch or electromagnetic clutch is faulty.	Consult an authorized Honda dealer.
Auger does not rotate.	Auger shear bolt is broken.	Replace the auger shear bolt (see page 91).
	Drive motor overheated by operation under excessive load, which armed the protection function.	Release the drive clutch lever and stop the work. Keep the engine switch in the ON position and wait until the drive control warning indicator (orange) does not blink (see page 65).
	Auger clutch switch or electromagnetic clutch is faulty.	Consult an authorized Honda dealer.

(3)Does not clear snow well. (continued)

SYMPTOM	POSSIBLE CAUSE	REMEDY
Snow discharge chute does not throw snow well.	Engine is overloaded. [MANUAL mode only]	Lower the driving speed (see page 68).
	Engine speed is too low. [MANUAL and POWER mode only]	Move the throttle control lever to the FAST position (see page 57 or 60).
	Blower is deformed.	Replace the blower (see page 92).
	Blower shear bolt is broken.	Replace the blower shear bolt (see page 91).
	Auger shear bolt is broken.	Replace the auger shear bolt (see page 91).
	Snow discharge chute is angled down.	Adjust so that the snow discharge chute is angled up (see page 27).
Auger runs up onto and does not cut into hard snow.	Auger height is not proper.	Adjust the auger height (see page 50).
Auger housing becomes clogged with snow.	Auger shear bolt is broken.	Replace the auger shear bolt (see page 91).
	Auger is worn.	Replace the auger (see page 92).
	Blower shear bolt is broken.	Replace the blower shear bolt (see page 91).
	The height of skid and scraper is not proper.	Adjust the skid and scraper (see page 48-49).
Auger is in contact with the road surface.	Auger height is not adjusted properly.	Adjust the auger height (see page 50).
	Skid and scraper height is not adjusted properly.	Adjust the skid and scraper (see page 48-49).
Snow blowing mechanism makes an abnormal noise.	The shape of the shaft and wing of the auger and/or blower is deformed.	Consult an authorized Honda dealer.
Chuter does not rotate.	Motor is overheated (breaker tripped).	Internal protection circuit is armed when the auger power height adjusting part is overheated by frequent application of the auger control switch. Wait for a while and operate the switch again.
	Motor or switch is faulty.	Consult an authorized Honda dealer.
	Right driver is faulty.	

(3)Does not clear snow well. (continued)

SYMPTOM	POSSIBLE CAUSE	REMEDY
Chuter guide does not operate.	Motor is overheated (breaker tripped).	Internal protection circuit is armed when the auger power height adjusting part is overheated by frequent application of the auger control switch. Wait for a while and operate the switch again.
	Motor or switch is faulty.	Consult an authorized Honda dealer.
	Left driver is faulty.	
Auger housing rolling does not operate. [USA model only]	Auger power rolling adjusting part is overheated.	Internal protection circuit is armed when the auger power height adjusting part is overheated by frequent application of the auger control switch. Wait for a while and operate the switch again.
	Auger power rolling adjusting part is faulty.	Consult an authorized Honda dealer.
	Right driver is faulty.	
Auger housing height does not operate.	Auger power height adjusting part is overheated.	Internal protection circuit is armed when the auger power height adjusting part is overheated by frequent application of the auger control switch. Wait for a while and operate the switch again.
	Auger power height adjusting part is faulty.	Consult an authorized Honda dealer.
	Left driver is faulty.	
Drive control warning indicator (orange) blinks or stays on.	Electric system is abnormal or faulty.	Check the drive control warning indicator (orange) for the number of blinks (see pages 118 and 119). Consult with your authorized Honda dealer. *1:

• If the snow depth is less than 2 inches (5 cm) deep, shift to a faster speed for more efficient snow throwing.

*1: Tell your authorized Honda snow blower dealer about the number of blinks of the drive control warning indicator (orange).

(4)Other problems

SYMPTOM	POSSIBLE CAUSE	REMEDY
Track is worked off from the wheels.	Track is loosened.	Check and adjust the deflection of the track (see page 89).
Headlight does not turn on.	Battery is dead.	Charge or replace the battery (see pages 96 and 99).
	Fuse is blown out.	Replace the fuse (see page 100).
	Bulb in the headlight is out.	Consult with an authorized Honda dealer.

JUMP STARTING

Start the engine using the two 12V booster batteries, which are connected in series.

1. Connect jumper cable A to the positive (+) terminal (1) on booster battery A. Connect the other end to the negative (—) terminal (2) on booster battery B.
2. Connect jumper cable B to the positive (+) terminal (3) on the snow blower. Connect the other end to the positive (+) terminal (4) on booster battery B.
3. Connect jumper cable C to the negative (—) terminal (5) on booster battery A. Connect the other end to the ground bolt (6) on the snow blower.
4. Start the engine (see page 44).
5. Remove the jumper cables in the reverse order.

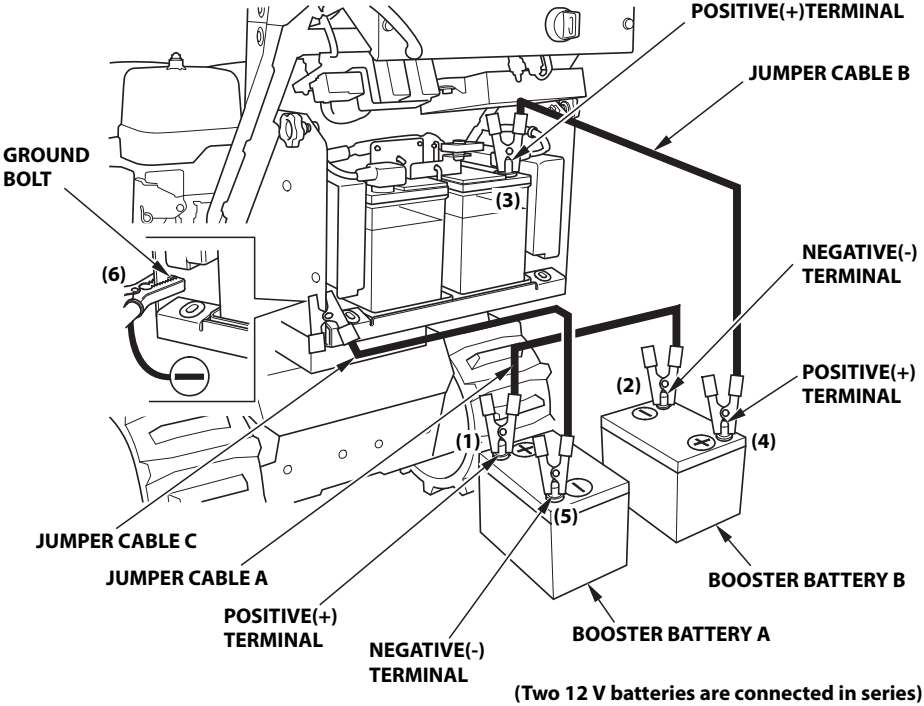

(Two 12 V batteries are connected in series)

NOTICE

- *When disconnecting the battery cable, be sure to disconnect at the battery negative (—) terminal first. To connect, connect at the positive (+) terminal first, then at the negative (—) terminal. Never disconnect the battery cable in the reverse order, or you may cause a short circuit if a tool contacts the positive terminal.*
- *If a battery must be replaced, replace both batteries at the same time.*

EMERGENCY TRANSPORT

You can move the snow blower by pushing or pulling it without engine power.

Place the snow blower on level ground after transportation and use a new cotter pin when reinstalling the wheel pin.

1. Remove the cotter pins from the rear right and left wheels.
2. Remove the wheel pins from the rear right and left wheels.
3. The track rotates freely, allowing the operator to move the snow blower without engine power.

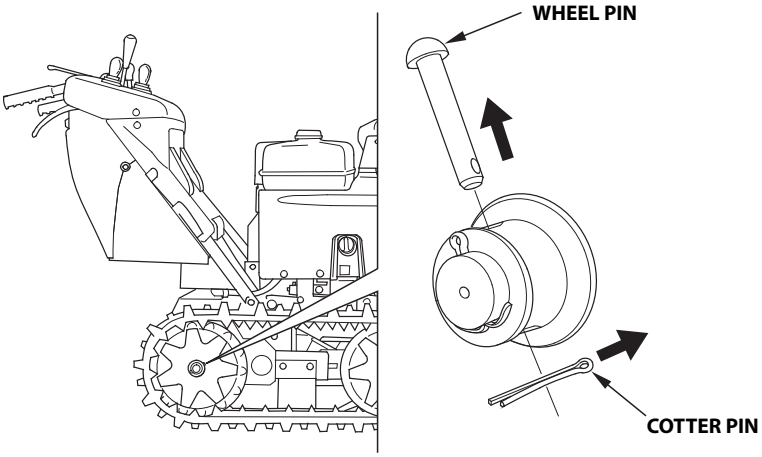

⚠ WARNING

Before removing the wheel pins, make sure to stop the rotating parts, stop the engine and remove the engine switch key.

Do not remove the wheel pins on the slope. The snow blower may move unintentionally, causing injury.

TECHNICAL INFORMATION

SERIAL NUMBER LOCATIONS

Record the engine and frame serial numbers and date of purchase in the spaces below. You will need these serial numbers when ordering parts and when making technical or warranty inquiries (see page 139).

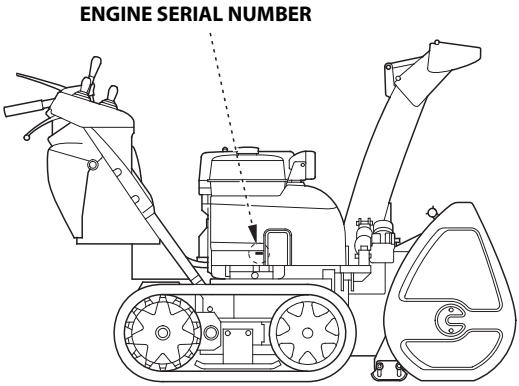

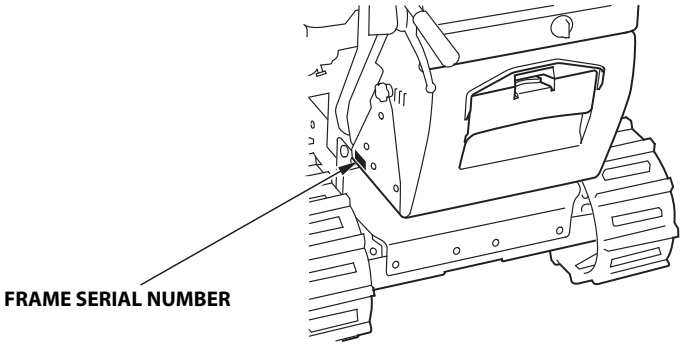

Engine serial number:_____

Frame serial number:_____

Date of purchase:_____

CARBURETOR MODIFICATIONS FOR HIGH ALTITUDE OPERATION

At high altitude, the standard carburetor air-fuel mixture will be too rich. Performance will decrease, and fuel consumption will increase. A very rich mixture will also foul the spark plug and cause hard starting. Operation at an altitude that differs from that at which this engine was certified, for extended periods of time, may increase emissions.

High altitude performance can be improved by specific modifications to the carburetor. If you always operate your snow blower at altitudes above 2,000 feet (610 meters), have your servicing dealer perform this carburetor modification. This engine, when operated at high altitude with the carburetor modifications for high altitude use, will meet each emission standard throughout its useful life.

Even with carburetor modification, engine horsepower will decrease about 3.5% for each 1,000-foot (300-meter) increase in altitude. The effect of altitude on horsepower will be greater than this if no carburetor modification is made.

NOTICE

When the carburetor has been modified for high altitude operation, the air-fuel mixture will be too lean for low altitude use. Operation at altitudes below 2,000 feet (610 meters) with a modified carburetor may cause the engine to overheat and result in serious engine damage. For use at low altitudes, have your servicing dealer return the carburetor to original factory specifications.

EMISSION CONTROL SYSTEM INFORMATION

Source of Emissions

The combustion process produces carbon monoxide, oxides of nitrogen, and hydrocarbons. Control of hydrocarbons and oxides of nitrogen is very important because, under certain conditions, they react to form photochemical smog when subjected to sunlight. Carbon monoxide does not react in the same way, but it is toxic.

Honda utilizes appropriate air/fuel ratios and other emissions control systems to reduce the emissions of carbon monoxide, oxides of nitrogen, and hydrocarbons.

Additionally, Honda fuel systems utilize components and control technologies to reduce evaporative emissions.

The U.S. and California Clean Air Acts, and Environment and Climate Change Canada (ECCC)

U.S. EPA, California and Canadian regulations require all manufacturers to furnish written instructions describing the operation and maintenance of emission control systems.

The following instructions and procedures must be followed in order to keep the emissions from your Honda engine within the emission standards.

Tampering and Altering

NOTICE

Tampering is a violation of federal and California law.

Tampering with or altering the emission control system may increase emissions beyond the legal limit. Among those acts that constitute tampering are:

- Removal or alteration of any part of intake, fuel, or exhaust systems.
- Alterations that would cause the engine to operate outside its design parameters.

Problems That May Affect Emissions
If you are aware of any of the following symptoms, have your engine inspected and repaired by your authorized Honda Power Equipment dealer.

- Hard starting or stalling after starting
- Rough idle
- Misfiring or backfiring under load
- Afterburning (backfiring)
- Black exhaust smoke or high fuel consumption

Replacement Parts
The emissions control systems on your new Honda engine were designed, built, and certified to conform with EPA, California (models certified for sale in California only), and Canadian emissions regulations. We recommend the use of Honda Genuine parts whenever you have maintenance done. These original design replacement parts are manufactured to the same standards as the original parts, so you can be confident of their performance. Honda cannot deny coverage under the emission warranty solely for the use of non-Honda replacement parts or service performed at a location other than an authorized Honda dealership; you may use comparable EPA certified parts, and have service performed at non-Honda locations. However, the use of replacement parts that are not of the original design and quality may impair the effectiveness of your emissions control system.
A manufacturer of an aftermarket part assumes the responsibility that the part will not adversely affect emissions performance. The manufacturer or rebuilder of the part must certify that use of the part will not result in a failure of the engine to comply with emissions regulations.

Maintenance
As the power equipment engine owner, you are responsible for completing all required maintenance listed in your owner's manual. Honda recommends that you retain all receipts covering maintenance on your power equipment engine, but Honda cannot deny warranty coverage solely for the lack of receipts or for your failure to ensure that all scheduled maintenance has been completed.

Follow the MAINTENANCE SCHEDULE on pages 79 and 80.
Remember that this schedule is based on the assumption that your Honda engine product will be used for its designed purpose. Sustained high-load or high-temperature operation, or use in dusty conditions, will require more frequent service.

AIR INDEX
(Models certified for sale in California)

An Air Index Information label is applied to engines certified to an emission durability time period in accordance with the requirements of the California Air Resources Board.

The bar graph is intended to provide you, our customer, the ability to compare the emissions performance of available engines. The lower the Air Index, the less pollution.

The durability description is intended to provide you with information relating to the engine's emission durability period. The descriptive term indicates the useful life period for the engine's emission control system. See your *Emission Control Warranty* for additional information.

Descriptive Term	Applicable to Emissions Durability Period
Moderate	50 hours (0 – 80 cc, inclusive) 125 hours (greater than 80 cc)
Intermediate	125 hours (0 – 80 cc, inclusive) 250 hours (greater than 80 cc)
Extended	300 hours (0 – 80 cc, inclusive) 500 hours (greater than 80 cc) 1,000 hours (225 cc and greater)

EMISSION CONTROL SYSTEM WARRANTY

Your Honda Power Equipment engine is designed, built, and equipped to meet the U.S. EPA, Environment Canada, and California Air Resources Board (models certified for sale in California only) emission standard for spark ignited engines. American Honda Motor provides the emission warranty coverage for engines in the United States and its territories. Honda Canada provides the emission warranty for engines in the 13 provinces and territories of Canada.

Warranty Coverage
Honda Power Equipment engines certified to the U.S. EPA, Environment Canada, and State of California (models certified for sale in California only) emission regulations are covered by this warranty to be free from defects in materials and workmanship that may keep it from meeting the applicable U.S. EPA, CARB and Canadian emissions requirements for a minimum of 2 years or the length of the Honda Power Equipment Distributor's Limited Warranty, whichever is longer, from the original date of delivery to the retail purchaser. This warranty is transferable to each subsequent purchaser for the duration of the warranty period. Warranty repairs will be made without charge for diagnosis, parts, and labor. Information about how to make a warranty claim, as well as a description of how a claim can be made and/or how service can be provided, can be obtained by contacting an authorized Honda Power Equipment dealer or by contacting the following:

American Honda
Email: powerequipmentemissions@ahm.honda.com
Telephone: (888) 888-3139

Honda Canada
Telephone: (888) 946-6329

The covered components include all components whose failure would increase an engine's emissions of any regulated pollutant or evaporative emissions. A list of specific components can be found in the separately included emissions warranty statement.

Specific warranty terms, coverage, limitations, and manner of seeking warranty service are also set forth in the separately included emissions warranty statement. In addition, the emission warranty statement can also be found on the Honda Power equipment website or at the following link:
http://powerequipment.honda.com/support/warranty

SPECIFICATIONS

Frame

Model	HSM1336iK2	
Type / Items	ATDR, PTDR (USA model)	CTD (Canadian model)
Description code	SBCJ	
Overall length	69.3 in (1,760 mm)	
Overall width	36.2 in (920 mm)	
Overall height	52.8 in (1,340 mm)	
Dry mass [weight]	551 lbs (250 kg)	240 kg (529 lbs)
Width of snow clearance	36.2 in (920 mm)	
Height of snow clearance	22.8 in (580 mm)	
Snow throwing distance (varies with snow conditions)	Max. 62 ft (19 m)	
Clearing capacity	91 [short] ton/hour (83 [metric] ton/hour)	

Engine

Model	GX390T2	
Displacement	23.7 cu-in (389 cm^3)	
Bore × stroke	3.46 × 2.52 in (88.0 × 64.0 mm)	
Starting method	Electric starter	
Ignition system	CDI magneto	
Oil capacity	1.1 US qt (1.1 L, 1.0 Imp qt)	
Fuel tank capacity	1.50 US gal (5.7 L, 1.25 Imp gal)	
Spark plug	BPR5ES (NGK), W16EPR-U (DENSO)	
Battery	USA model 12 V 35 Ah/20 HR × 2 (connect in series)	Canadian model 12 V 30 Ah/20 HR × 2 (connect in series)

Tuneup

ITEM	SPECIFICATION	MAINTENANCE
Spark plug gap	0.028—0.031 in (0.7—0.8 mm)	Refer to page: 87
Valve clearance	IN: 0.15±0.02 mm EX: 0.20±0.02 mm	See your servicing dealer
Other specifications	No other adjustments needed.	

Specifications are subject to change without notice.

CONSUMER INFORMATION

DEALER LOCATOR INFORMATION

To find an authorized Honda Servicing Dealer
For USA:
Visit our website: http://powerequipment.honda.com/dealer-locator

For Canada:
Call 1-888-946-6329 or visit our website:
English
http://powerequipment.honda.ca/dealerlocator
French
http://powerequipment.honda.ca/trouver-concessionaire

HONDA PUBLICATIONS

Shop Manual

This manual covers complete maintenance and overhaul procedures.
It is intended to be used by a skilled technician.
For USA:
Available through your Honda dealer or visit
http://powerequipment.honda.com/support/shop-manuals

For Canada:
Contact your dealer for information on the Shop Manual.

Parts Catalog

For USA:
This manual provides complete, illustrated parts lists. Available online at peparts.honda.com or through your Honda dealer.

For Canada:
Contact your dealer for information on parts.

Accessories Catalog

Your authorized Honda power equipment dealer offers a selection of accessories (optional equipment) to make your snow blower even more useful.
For USA:
Visit http://powerequipment.honda.com/snowblowers/accessories and click on See all snowblower accessories to see the entire catalog of accessories.

For Canada:
Check with your dealer or visit www.honda.ca and select the Accessories tab under the Snow blower segment to view the range of accessories available for your model.

CUSTOMER SERVICE INFORMATION

Honda Power Equipment dealership personnel are trained professionals. They should be able to answer any question you may have. If you encounter a problem that your dealer does not solve to your satisfaction, please discuss it with the dealership's management. The Service Manager or General Manager can help. Almost all problems are solved in this way.

If you are dissatisfied with the decision made by the dealership's management, contact the Honda Power Equipment Customer Relations Office. You can write to:

American Honda Motor Co., Inc.
Power Equipment Division
Customer Relations Office
4900 Marconi Drive
Alpharetta, Georgia 30005 – 8847
Telephone: (770) 497 - 6400 M-F,
9:00 am to 7:30 pm ET

In Canada:
Honda Canada, Inc.
Customer Relation Department
180 Honda Boulevard
Markham, Ontario L6C 0H9
Tel: 1-888-946-6329 (Toll free)
Fax: 1-877-939-0909 (Toll free)
E-mail: honda_cr@ch.honda.com

When you write or call, please give us this information:

- Model and serial numbers (see page 131)
- Name of the dealer who sold the snow blower to you
- Name and address of the dealer who services your snow blower
- Date of purchase
- Your name, address, and telephone number
- A detailed description of the problem

MEMO

QUICK REFERENCE INFORMATION

Fuel	Type	Regular unleaded gasoline with an ethanol content of no more than 10% and a pump octane rating of 86 or higher (see page 82)
Engine Oil	Type	SAE 5W-30 API SJ or later for general use
Spark Plug	Type	BPR5ES (NGK) W16EPR-U (DENSO)
Maintenance	Before each use, check the following.	Engine oil level. Battery condition sign and electrolyte level. Check the auger skid and scraper. Check the auger and blower shear bolt. Check all the nuts and bolts.
	First 20 hours	Change engine oil. Check the track.
	Subsequent	See Maintenance Schedule (page 79 and 80)

HONDA

HSM1336i
31V15627
00X31-V15-6270

00X31V15 6270

AH 英 Y 200.2020.07
Hi Printed in Japan