Form No. 3464-369 Rev A

Electric Deck Lift Kit

Serial Number 413000000 and After Z Master® 2000 or Serial Number 412200557 and After Z Master® 4000 Series Riding Mower

Model No. 147-7867

Installation Instructions

Installation

Loose Parts

Use the chart below to verify that all parts have been shipped.

Procedure	Description	Qty.	Use
1	No parts required	–	Prepare the machine.
2	No parts required	–	Remove the left side pod and fuel-tank cap (Z Master 4000 only).
3	No parts required	–	Remove the existing left motion-control lever.
4	No parts required	–	Remove the deck-lift spring.
5	Left motion-control lever	1	Install the new left motion-control lever.
6	Pivot pin Locknut (1/2 inch) Actuator mount Carriage bolt (5/16 x 1 inch) Locknut (5/16 inch)	1 1 1 2 2	Install the actuator mount and rear-lift hardware.
7	Deck-lift wire harness Push-mount fastener Relay Taptite screw P-clamp (Z Master 2000 only)	1 1 2 1 1	Route the wire harness and install the relays.
8	No parts required	–	Install the left side pod and fuel-tank cap (Z Master 4000 only).
9	No parts required	–	Connect the wire harness.
10	Actuator Pin clip Aluminum spacer Clevis pin	1 2 1 1	Install the actuator.
11	No parts required	–	Remove the transport lock.
12	No parts required	–	Check the mower-deck height of cut and rake.

Note: Determine the left and right sides of the machine from the normal operating position.

© 2023—The Toro® Company
8111 Lyndale Avenue South
Bloomington, MN 55420

Register at www.Toro.com.

Original Instructions (EN)
Printed in the USA
All Rights Reserved

3464-369

1

Preparing the Machine

No Parts Required

Procedure

1. Park the machine on a level surface.
2. Disengage the blade-control switch.
3. Move the motion-control levers outward to the NEUTRAL-LOCK position.
4. Engage the parking brake.
5. Shut off the engine and remove the key.
6. Disconnect the negative battery cable.

⚠ WARNING

Incorrect battery cable routing could damage the machine and cables, causing sparks. Sparks can cause the battery gases to explode, resulting in personal injury.

- **Always disconnect the negative (black) battery cable before disconnecting the positive (red) cable.**
- **Always connect the positive (red) battery cable before connecting the negative (black) cable.**

7. Push the deck-lift pedal fully forward to lock the mower deck in the TRANSPORT position (Figure 1).

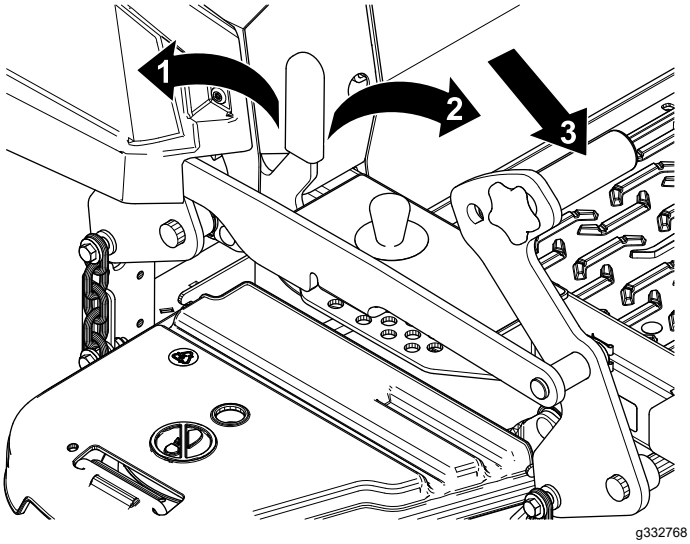

g332768

Figure 1

1. LOCK position—the mower deck locks into the transport position.
2. UNLOCK position—the mower deck does not lock into the transport position.
3. Push on the deck-lift pedal using your foot to raise the mower deck.

8. Support the mower deck using 4x4 blocks of wood.
9. Remove the height-of-cut pin from the height-of-cut bracket (Figure 2).

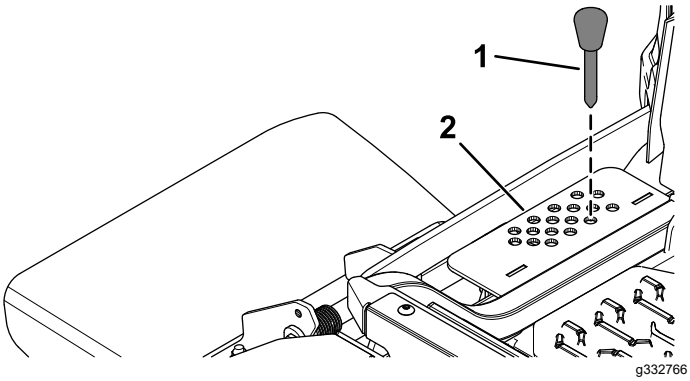

g332766

Figure 2

1. Height-of-cut pin
2. Height-of-cut bracket

2

Removing the Left Side Pod and Fuel-Tank Cap

Z Master 4000 Only

No Parts Required

Procedure

⚠ DANGER

Under certain conditions, fuel and fuel vapors are highly flammable and explosive. A fire or explosion from fuel can burn you and others and can cause property damage.

- **Fill the fuel tank outdoors, in an open area, when the engine is off and cold. Wipe up any spilled fuel.**
- **Do not fill the fuel tank completely full. Add fuel to the fuel tank until the level is 25 mm (1 inch) below the top of the tank, not the filler neck. This empty space in the tank allows the fuel to expand.**
- **Never smoke when handling fuel, and stay away from an open flame or a spark that could ignite fuel fumes.**
- **Store fuel in a clean, safety-approved container and keep the cap in place.**

1. Remove the fuel-tank cap from the left side pod (Figure 3).

   Retain the fuel-tank cap for later installation.

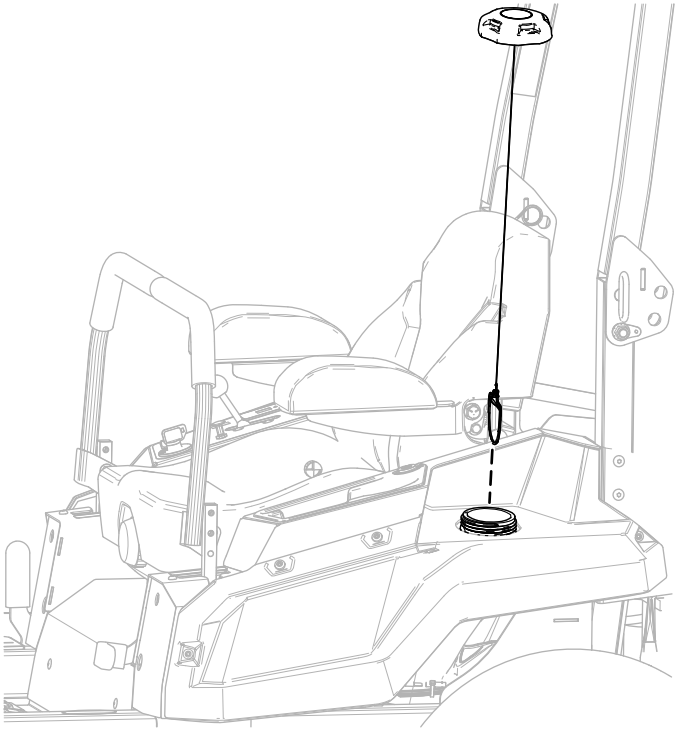

g345966

Figure 3

2. Remove the 4 shoulder screws securing the left side pod and remove the left side pod (Figure 4).

   Retain the left side pod and 4 shoulder screws for later installation.

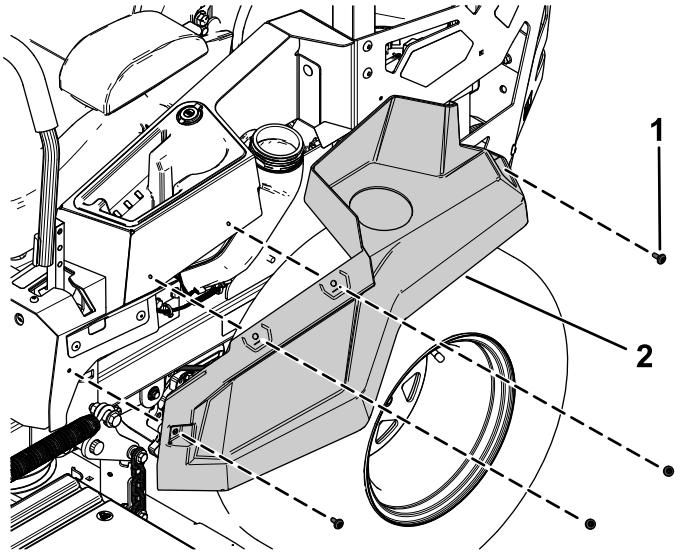

g345968

Figure 4

1. Shoulder screw
2. Left side pod

3. Install the fuel-tank cap (Figure 3).

3

Removing the Existing Left Motion-Control Lever

No Parts Required

Procedure

Remove the 2 flange-head bolts (3/8 x 1 inch) securing the existing left motion-control lever and remove the left motion-control lever (Figure 5).

Retain the 2 flange-head bolts (3/8 x 1 inch) for later installation.

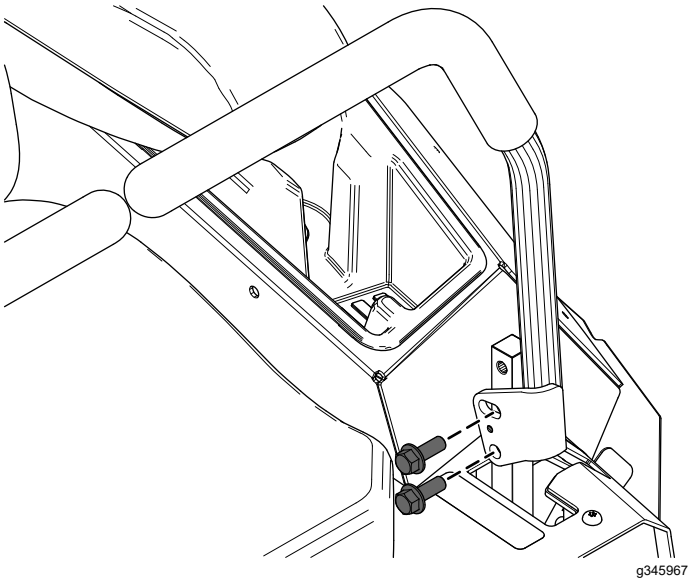

Figure 5

4

Removing the Deck-Lift Spring

No Parts Required

Procedure

1. Remove the spring bolt securing the front of the deck-lift spring (Figure 6).
2. Remove the shoulder bolt and locknut (1/2 inch) securing the rear of the deck-lift spring (Figure 6).
3. Remove the deck-lift spring (Figure 6).

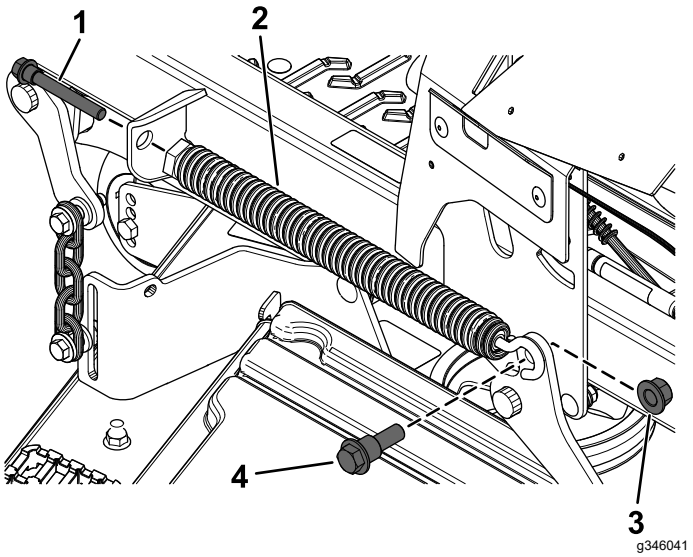

Figure 6

1. Spring bolt
2. Deck-lift spring
3. Locknut (1/2 inch)
4. Shoulder bolt

5

Installing the New Left Motion-Control Lever

Parts needed for this procedure:

1	Left motion-control lever

Procedure

1. Secure the new left motion-control lever using the previously removed 2 flange-head bolts (3/8 x 1 inch) as shown in Figure 7.

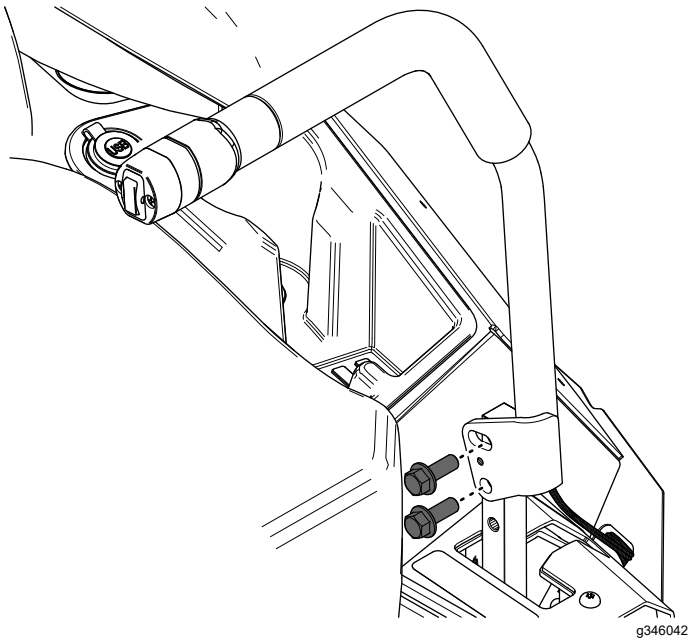

g346042

Figure 7

2. Route the wire harness on the motion-control lever through the hole in the left cover plate (Figure 8).
3. Secure the wire harness to the notch in the left motion-control plate (Figure 8).

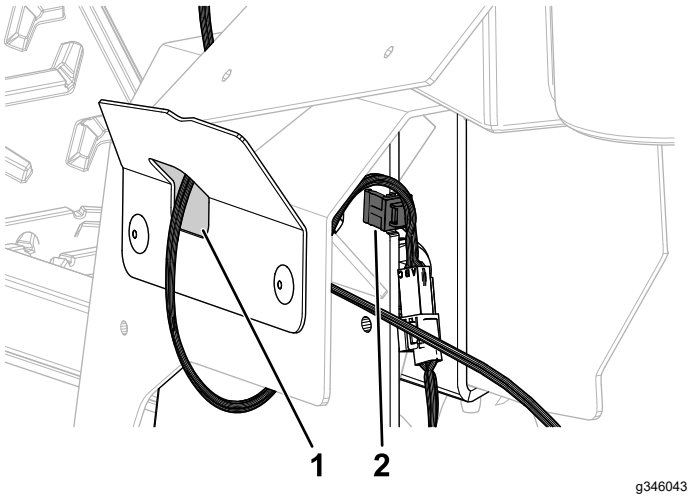

g346043

Figure 8

1. Route the harness through the opening in the left cover plate here.
2. Secure the wire harness to the notch here.

6

Installing the Actuator Mount and Rear-Lift Hardware

Parts needed for this procedure:

1	Pivot pin
1	Locknut (1/2 inch)
1	Actuator mount
2	Carriage bolt (5/16 x 1 inch)
2	Locknut (5/16 inch)

Procedure

1. Secure the pivot pin to the rear deck-lift arm using 1 locknut (1/2 inch) as shown in Figure 9.

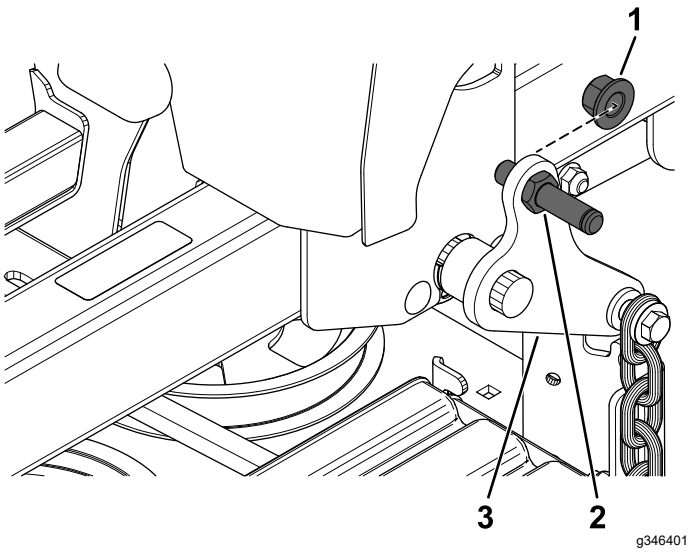

Figure 9

1. Locknut (1/2 inch)
2. Pivot pin
3. Rear deck-lift arm

2. Secure the actuator mount to the left frame tube using 2 carriage bolts (5/16 x 1 inch) and 2 locknuts (5/16 inch) as shown in Figure 10.

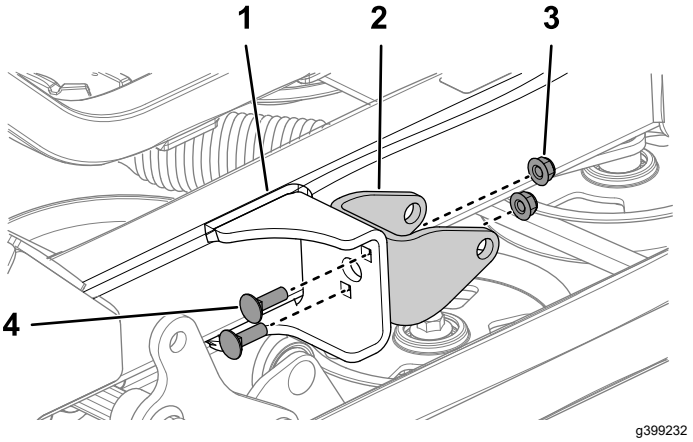

Figure 10

1. Left frame tube
2. Actuator mount
3. Locknut (5/16 inch)
4. Carriage bolt (5/16 x 1 inch)

7

Routing the Wire Harness and Installing the Relays

Parts needed for this procedure:

1	Deck-lift wire harness
1	Push-mount fastener
2	Relay
1	Taptite screw
1	P-clamp (Z Master 2000 only)

Refer to the following figure for how to route the wire harness.

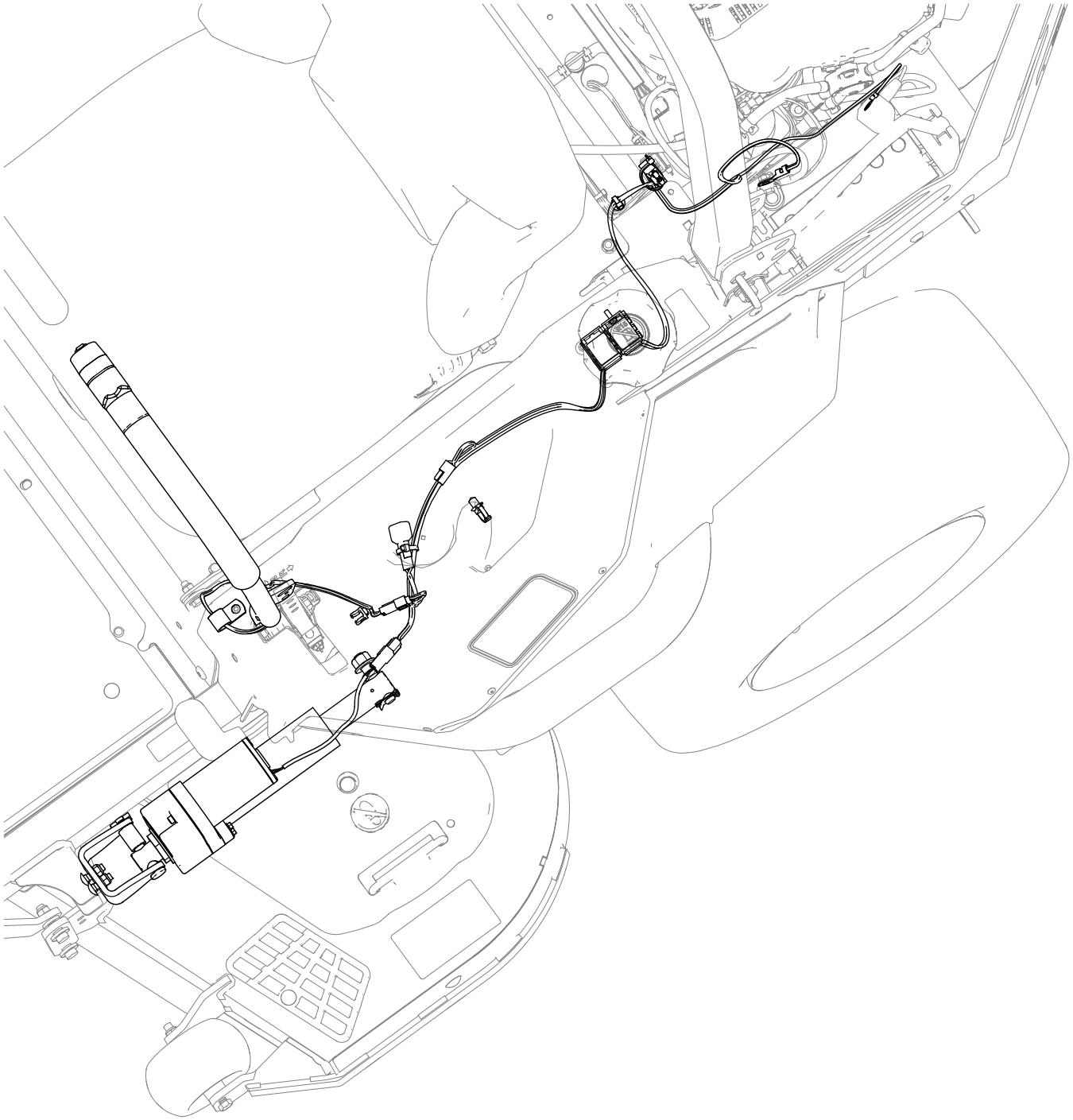

g453572

Figure 11

1. Route the wire harness through the opening in the p-clamp.
2. Route the wire harness along the left side of the machine.

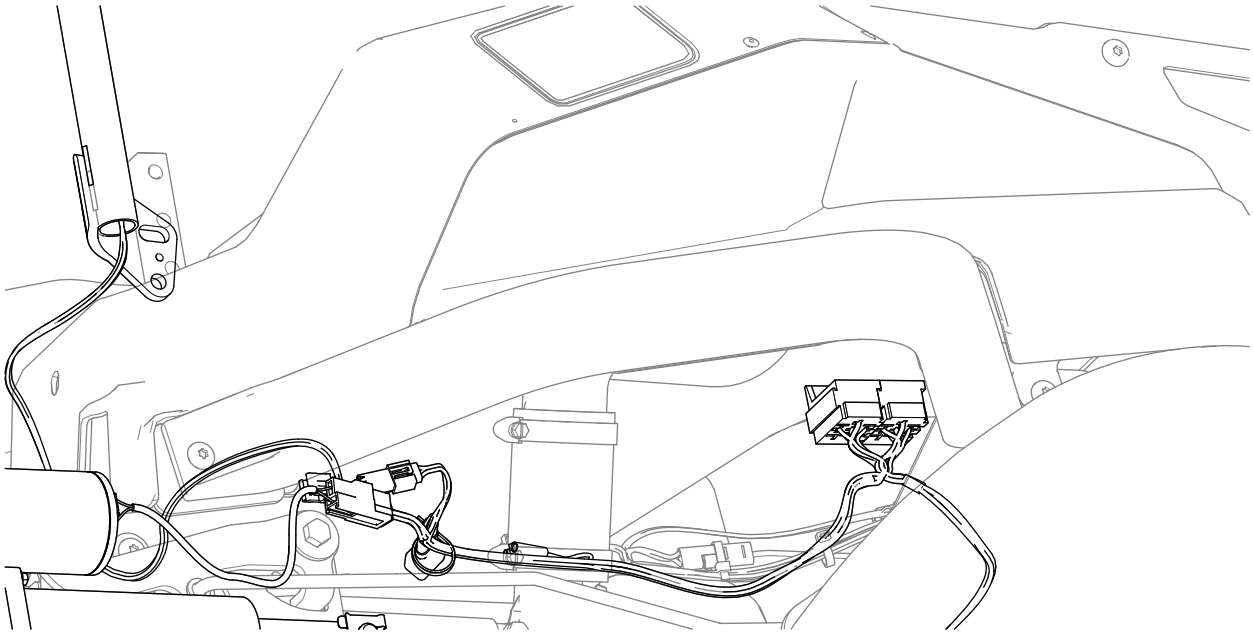

g453593

Figure 12

3. Secure the wire harness to the left pod near the relays using the taptite screw.

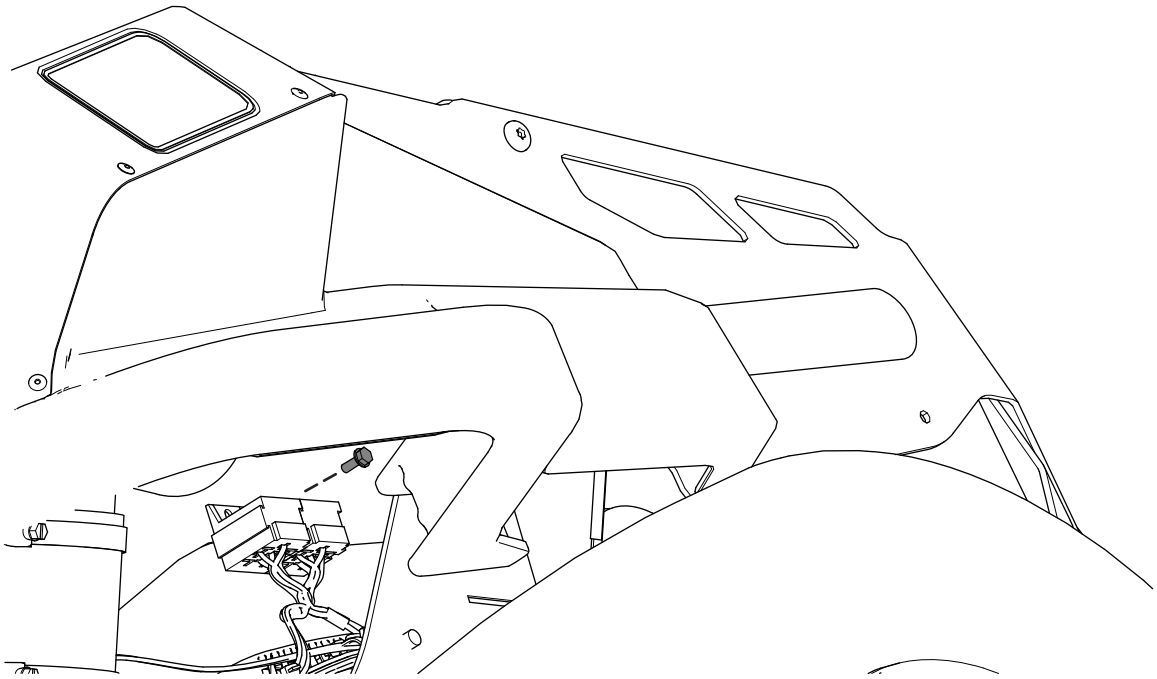

g453604

Figure 13

4. Install the 2 relays.

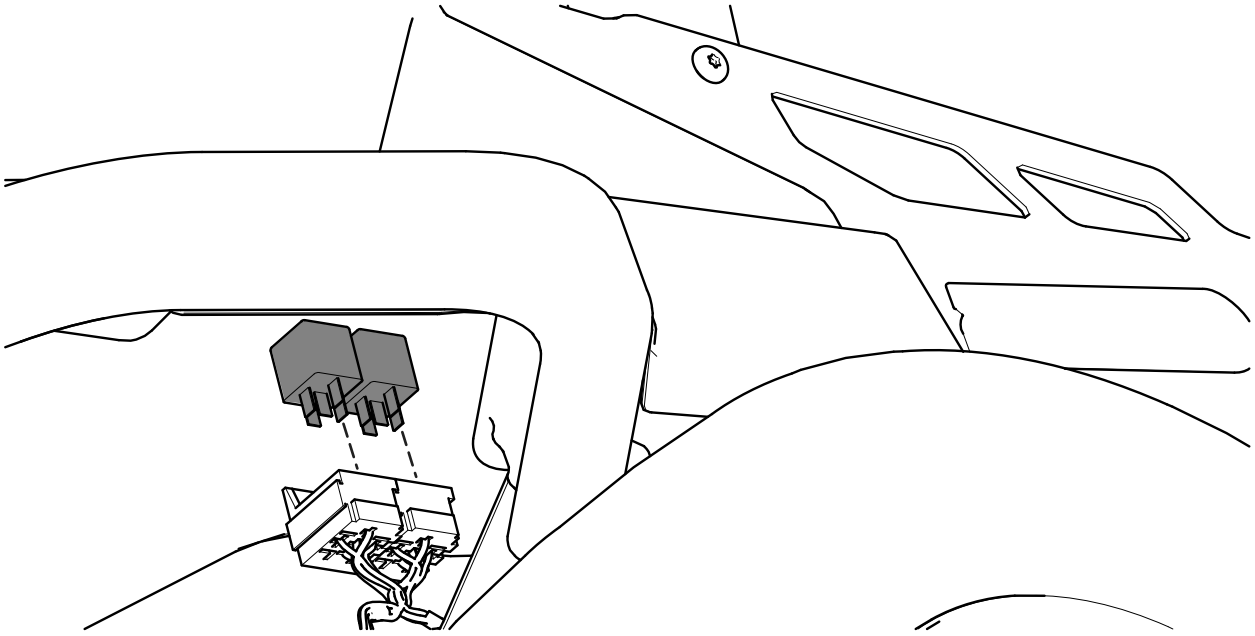

g453605

Figure 14

5. Remove the screw from the left pod.

   Note: Retain the screw.

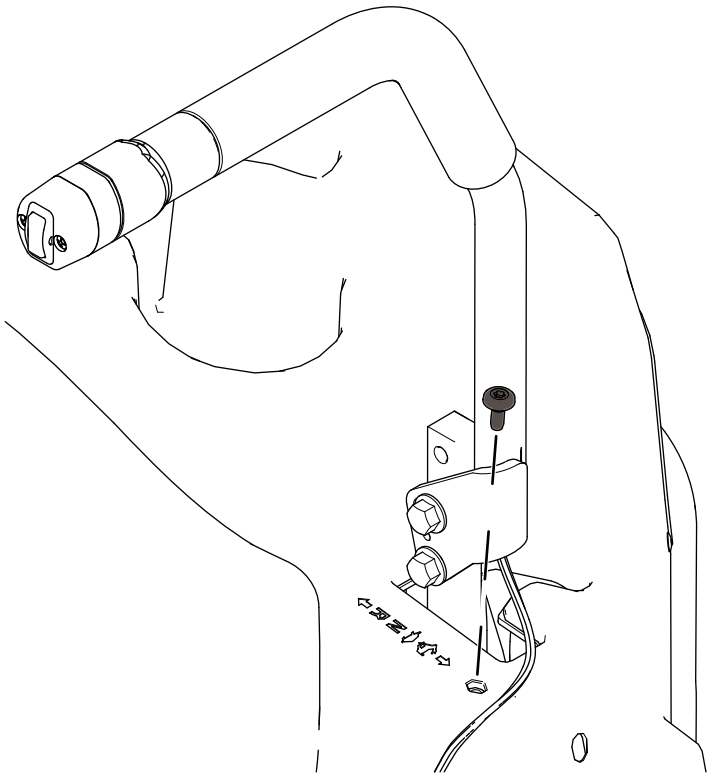

g453606

Figure 15

6. Secure the p-clamp to the left pod using the previously-removed screw.

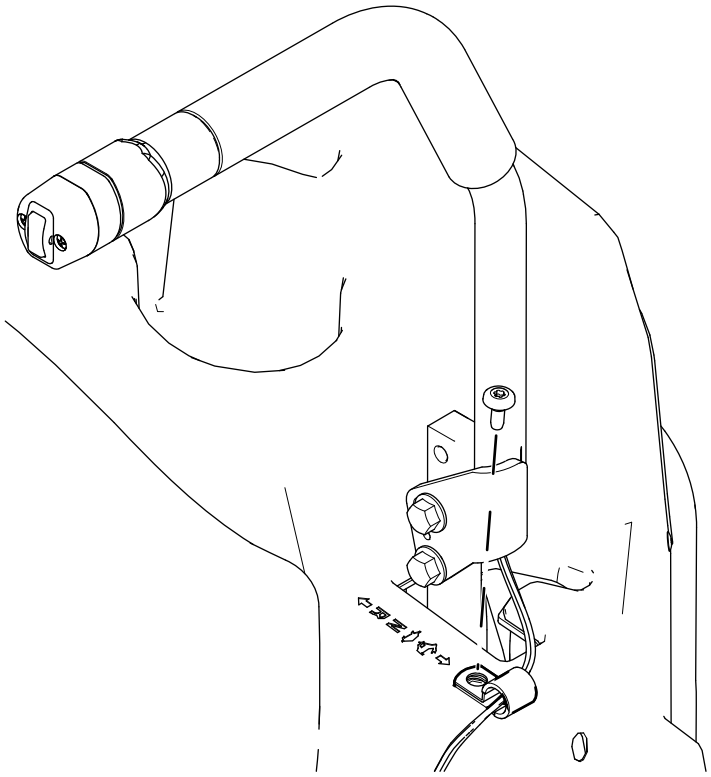

g453619

Figure 16

1. Install the front push-mount fastener into the parking-brake lever bracket (Figure 17).

   Note: The rear push-mount fastener is already installed.

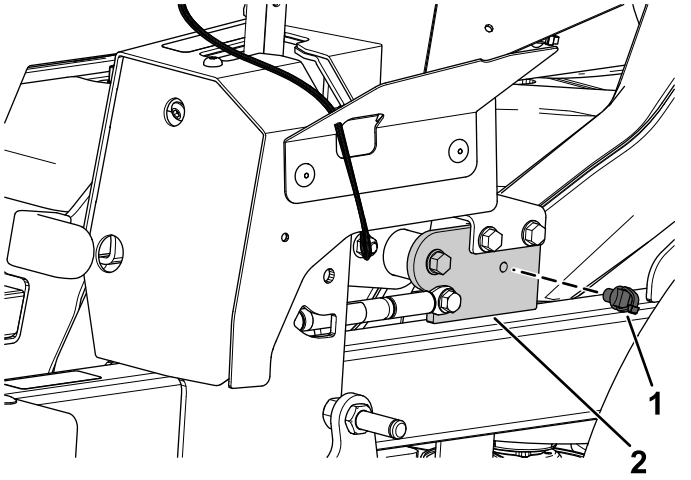

Figure 17

1. Push-mount fastener
2. Parking-brake lever bracket

2. Route the wire harness (Figure 18) along the left side of the frame, and through the push-mount fastener that you installed in step 1.

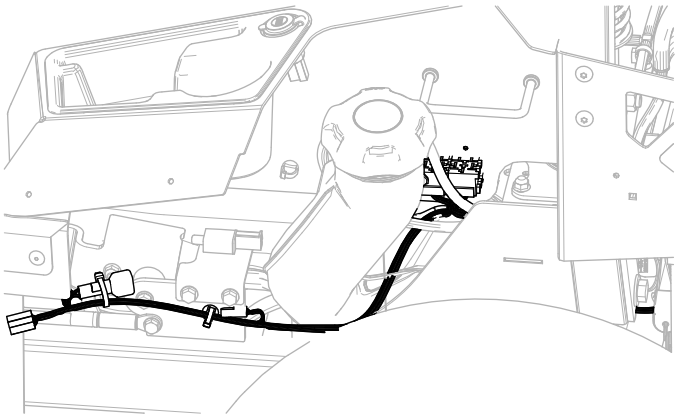

Figure 18

3. Install the second push-mount fastener into the rear fuel-tank bracket (Figure 19).

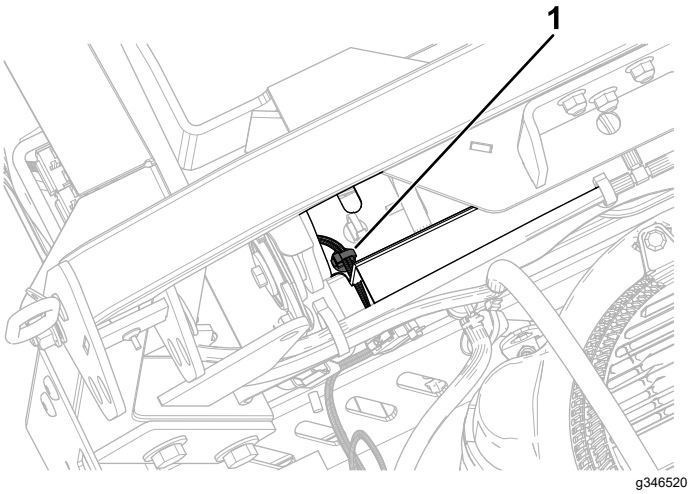

Figure 19

1. Push-mount fastener

4. Secure the wire harness near the relays using the taptite screw (Figure 20).

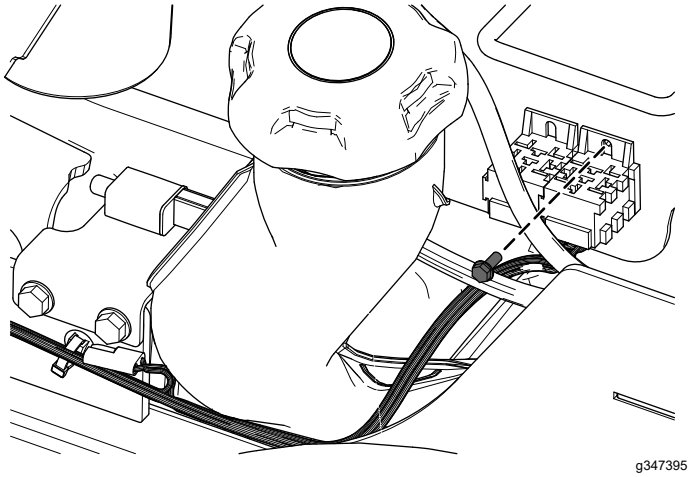

Figure 20

5. Install the 2 relays (Figure 21).

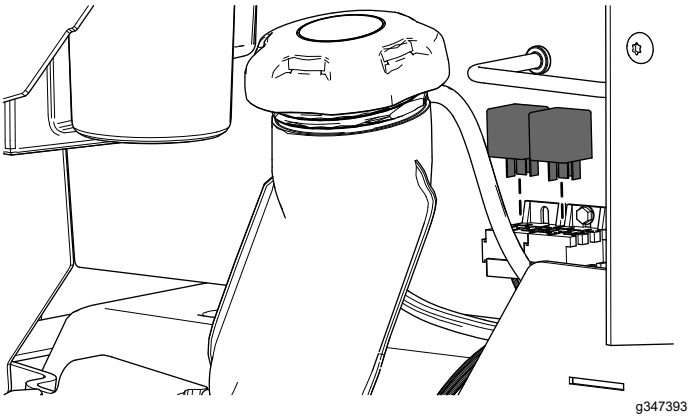

Figure 21

8

Install the Left Side Pod and Fuel-Tank Cap

Z Master 4000 Only

No Parts Required

Procedure

1. Remove the fuel-tank cap (Figure 3).
2. Secure the left side pod using the previously removed 4 shoulder screws (Figure 4).
3. Install the fuel-tank cap (Figure 3).

9

Connecting the Wire Harness

No Parts Required

Procedure

1. Connect the kit wire harness to the machine wire harness connector labeled CONN-DECK LIFT.
2. Connect the kit wire harness connector to the new left motion-control lever connector (Figure 22).

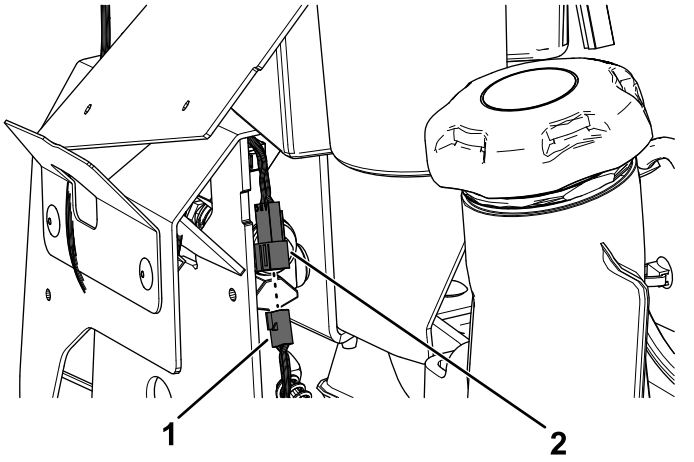

Figure 22

1. Kit wire harness connector
2. New left motion-control lever connector

3. Connect the kit wire harness to the actuator.

4. Pull the boot cover off the positive battery terminal.
5. Remove the nut from the positive battery terminal and install the kit wire harness positive terminal ring onto the bolt (Figure 23).
6. Secure the positive terminal ring using the previously removed nut (Figure 23).
7. Install the boot cover over the positive battery terminal.
8. Remove the nut from the negative battery terminal and install the kit wire harness negative terminal ring onto the bolt (Figure 23).
9. Secure the negative terminal ring using the previously removed nut (Figure 23).

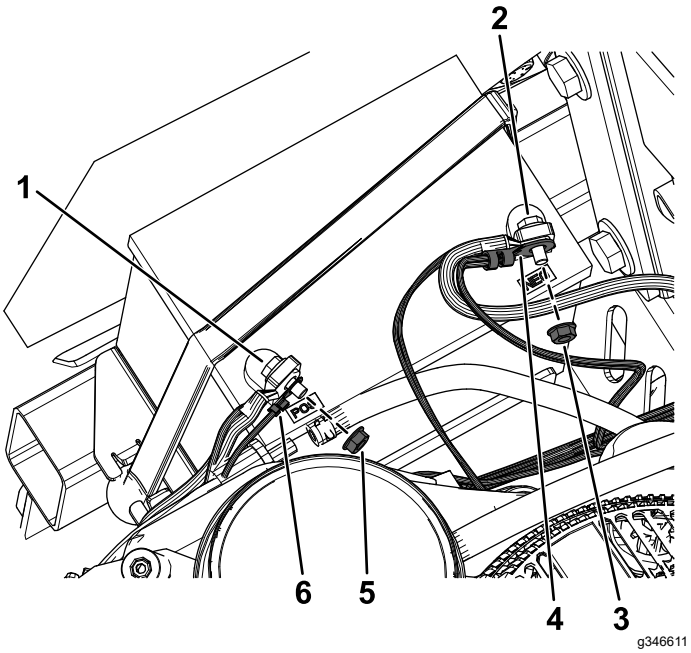

Figure 23

1. Positive terminal bolt
2. Negative terminal bolt
3. Negative terminal nut
4. Kit wire harness negative terminal ring
5. Positive terminal nut
6. Kit wire harness positive terminal ring

10

Installing the Actuator

Parts needed for this procedure:

1	Actuator
2	Pin clip
1	Aluminum spacer
1	Clevis pin

Procedure

1. Secure the actuator to the rear deck-lift arm using the pin clip (Figure 24).

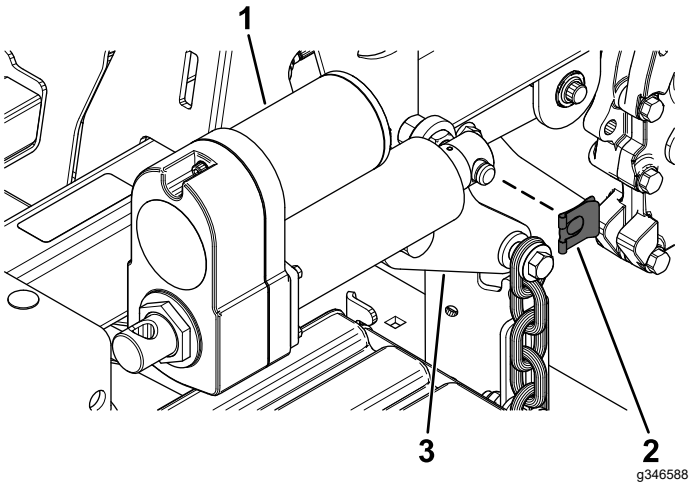

Figure 24

1. Actuator
2. Pin clip
3. Rear deck-lift arm

2. Rotate the actuator upward and align the actuator with the holes in the actuator mount.

   If the holes **do not** align, turn the machine on, and carefully press the deck-lift switch on the motion-control lever up or down until the holes align.

3. Secure the actuator to the actuator mount using the clevis pin, the aluminum spacer, and the pin clip as shown in Figure 25.

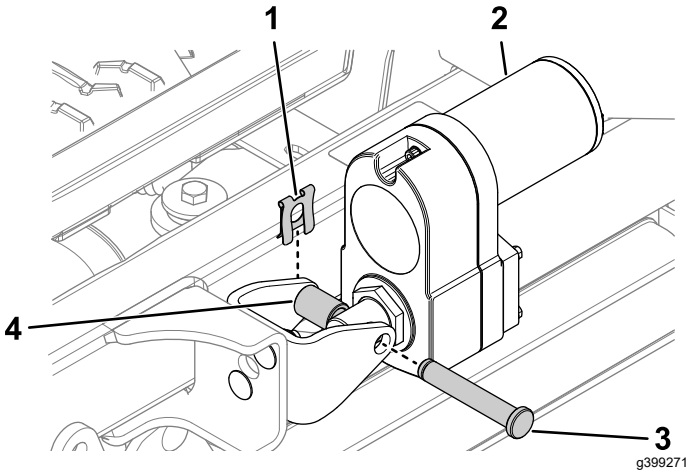

Figure 25

1. Pin clip
2. Actuator
3. Clevis pin
4. Aluminum spacer

11

Removing the Transport Lock

No Parts Required

Procedure

1. Push the deck-lift switch upward until you hear a ratcheting sound or clicking sound from the actuator.
2. Turn off the machine.
3. Remove the bolt, washer, and transport lock (Figure 26).

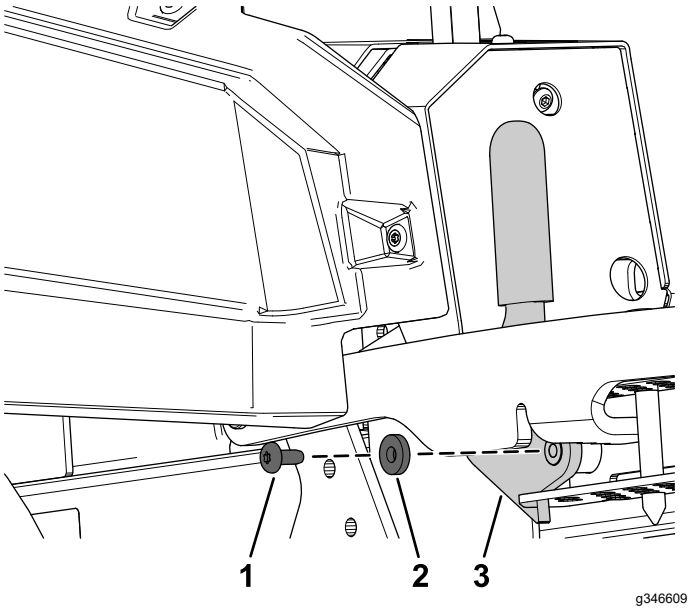

Figure 26

1. Bolt
2. Washer
3. Transport lock

12

Checking the Mower-Deck Height of Cut and Rake

No Parts Required

Procedure

Refer to the Adjusting the Side-to-Side Leveling and the Blade Slope procedure in the *Operator's Manual*.

Operation

Adjusting the Mower Deck to Transport Height

1. Push up on the deck-lift switch (Figure 28) until the deck is fully raised.
2. Insert the height-of-cut pin into the 127 mm (5 inches) height-of-cut position of the bracket (Figure 27).

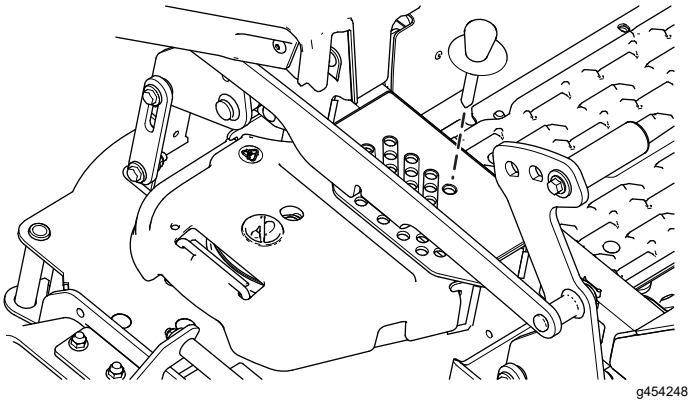

g454248

Figure 27

3. Push down on the deck-lift switch until the height-of-cut linkage slightly contacts the height-of-cut pin.

   Note: Too much contact between the height-of-cut linkage and height-of-cut pin can negatively affect the mower deck height of cut and leveling.

Adjusting the Height of Cut

For Machines with an Electric Deck Lift

1. Push up on the deck-lift switch (Figure 28).

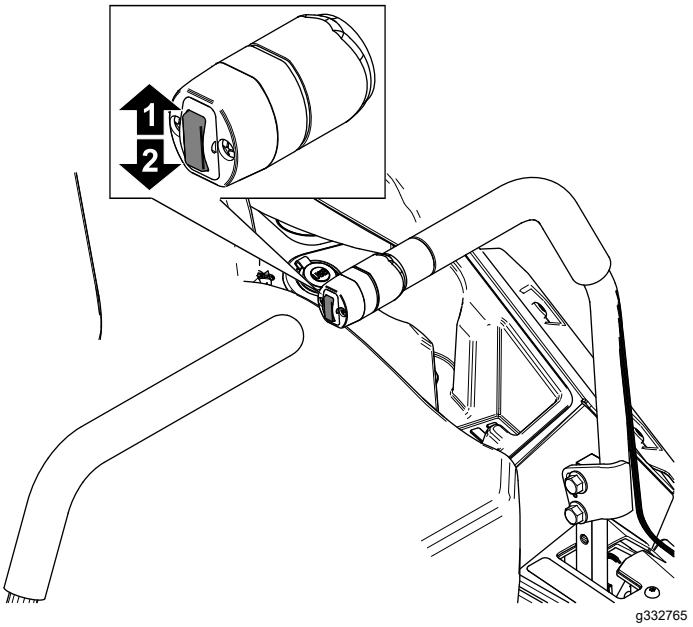

g332765

Figure 28

1. Push up to raise the deck.
2. Push down to lower the deck.

2. Select a hole in the height-of-cut bracket corresponding to the height of cut desired, and insert the pin (Figure 29).
3. Push down on the deck-lift switch until the height-of-cut linkage slightly contacts the height-of-cut pin (Figure 29).

   Note: Too much contact between the height-of-cut linkage and height-of-cut pin can negatively affect the mower deck height of cut and leveling.

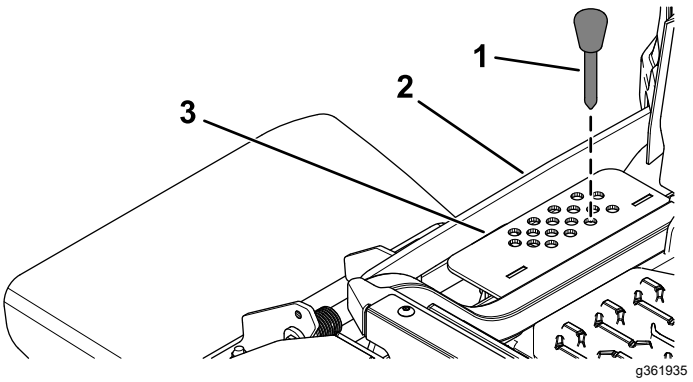

g361935

Figure 29

1. Height-of-cut pin
2. Height-of-cut linkage
3. Height-of-cut bracket



Count on it.