PRORUN®

GAS///

LAWN TRACTOR

MODEL: PLT42LH1

OPERATOR'S MANUAL



Everything PRORUN

Before using, read the instructions.

⚠ **IMPORTANT – READ CAREFULLY BEFORE USE.**

⚠ **IMPORTANT SAFETY INSTRUCTIONS – SAVE THESE INSTRUCTIONS**

WARNING: To reduce the risk of injury, the user must read and understand the User manual before using this product. Keep these instructions for future reference.

Please let us know what you think. To leave a comment and see our complete product line, Visit:

PRORUNTOOLS.COM ★★★★★

1-844-905-0882, info@proruntech.com

Version: A – Issue Date: 5/22/2025

1. PRODUCT SPECIFICATIONS

Model		PLT42LH1
Engine model		Loncin LC1P91F
Engine displacement		546cc
Nominal power		8.3kW
Max. engine speed		8.8km/h 5.5 mph
Fuel		Unleaded gasoline, minimum 90 octane
Engine oil		SAE 30
Oil capacity		1.6 Liter
Spark plug		F7RTC or equivalent
Spark plug gap		0.60 - 0.80 mm (0.023 - 0.031 in)
Blade model		Twin
Cutting width		108cm (42")
Sound pressure level at operator		LpA: 87 dB(A), KpA: 3 dB(A)
Measured sound power level		LwA: 98.8 dB(A), KwA: 1.11 dB(A)
Guaranteed sound power level (2000/14/EC)		LwA: 100 dB(A)
Vibration	Hand-arm	A_h: 3.4 m/s^2, K_h: 1.5 m/s^2
	Whole body	A_h: 1.1 m/s^2, K_h: 1.5 m/s^2
Mass		170kg
Driving Speed		Forward: 8.8km/h 5.5 mph Reverse: 4.5km/h 2.8 mph
Blade screw tightening torque		40-45 Nm
Cutting height (on 7 levels)		30~90mm 1.2" to 3.5"
Front wheels		15"×6.00-6
Rear wheels		18"×8.50-8
Front wheel inflation pressure		1.2 bar/ 17.7 PSI
Rear wheel inflation pressure		1.0 bar / 14.5 PSI
Electrical system		12V DC
Battery		18 Ah
Min. turning radius		45cm 17.7"
Capacity of fuel tank		7.5 Liters

2.TABLE OF CONTENTS

1. PRODUCT SPECIFICATIONS 2

2. TABLE OF CONTENTS 3

3. GENERAL WARNINGS 4

4. GENERAL SAFETY REGULATIONS 5

5. SYMBOLS 14

6. SET UP 19

7. CONTROLS AND OPERATIONS 29

8. MAINTENANCE 46

9. EXPLODED VIEWS AND PARTS 56

10. WARRANTY 69

11. ENGINE MANUAL 71

GENERAL WARNINGS

⚠WARNING! FOLLOW THESE INSTRUCTIONS CAREFULLY!
Before using it, read and understand the installation and operation instructions in this manual to become familiar with how this tractor mower works. Failure to follow all instructions listed below may result in electric shock, fire, and/ or serious injury.

⚠WARNING! This machine is capable of amputating hands and feet and throwing objects. Failure to observe the following safety instructions could result in serious injury or death.

1. Always safeguard these operating instructions so that they can be consulted if you need any information about the appliance.
2. Only pass on the appliance to other people together with these operating instructions.
3. Comply with the safety and warning information in these operating instructions.
4. The tractor mowers are supplied with different levels of equipment. Please note that the illustrations may differ somewhat from the original. Please contact a specialist workshop or the manufacturer if you encounter difficulties in following the descriptions.
5. Comply with the supplied assembly instructions.

⚠ HAZARD! Carefully read this instruction manual completely. Abide by all the "SAFETY PRECAUTIONS" before, during, and after using the machine.
Keep this manual and all the attachments for any future consultation.
In case of any change in ownership, the manual must be handed over together with the machine.

HOW TO READ THE MANUAL
Some paragraphs in the manual containing important information regarding safety and operation are emphasized in the following ways.

NOTE ⚠ IMPORTANT! ⚠ HAZARD! ⚠ CAUTION! These give details or further information on what has already been said, with the aim of preventing damage to the machine.

⚠ WARNING! Non-observance will result in the risk of injury to oneself or others.

⚠ DANGER! Non-observance will result in the risk of serious injury or death to oneself or others.

NOTE **Positions on the machine, such as "front", "back", "left" or "right" hand side, refer to the direction of forward travel.**

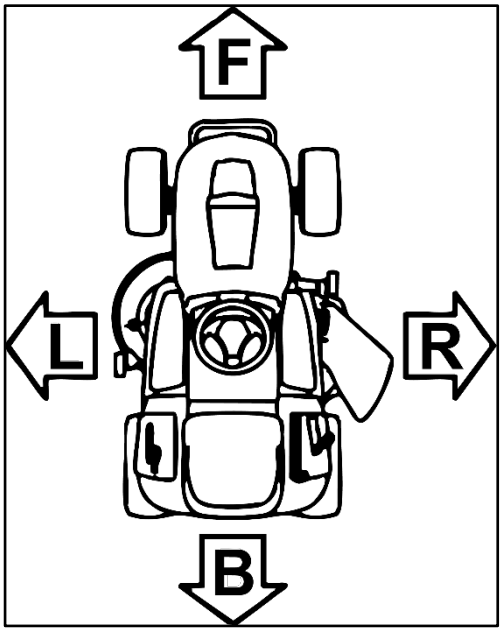

⚠IMPORTANT! **For all operations regarding the use and maintenance of the engine not described in this manual, refer to the relevant manuals which form an integral part of all the documentation supplied with the machine.**

4. GENERAL SAFETY REGULATIONS

⚠WARNING! **Read Carefully before using this machine.**

⚠WARNING! **Never mow while people, especially children, or pets nearby.**

1. Read, understand, and follow instructions and warnings in this manual and on the machine, engine, and attachments. Be familiar with the controls and how to use the equipment properly.
2. Only allow operators, who are responsible, trained, familiar with the instructions, and physically capable of operating the machine.
3. Never let children or people unfamiliar with these instructions use the machine. Local regulations can restrict the age of the user.
4. Never mow while dark.

5. Keep in mind that the operator or user is responsible for accidents or hazards occurring to other people or their property.
6. Do not carry passengers and keep bystanders away.
7. All drivers should seek and obtain professional and practical instruction. Such instruction should be emphasized:

- The need for care and concentration when working with ride-on machines.
- You cannot use the brake to regain control of a ride-on machine sliding down a slope. The main reasons for loss of control are.
- Insufficient wheel grip.
- Over-speeding.
- Inadequate braking.
- The type of machine is unsuitable for its task.
- Unawareness of the effect of ground conditions, especially slopes.
- Incorrect hitching and distribution.

⚠WARNING! Danger if protective devices are removed or manipulated! Do not operate with any protective devices removed or manipulated. Defective protective devices must be repaired or renewed immediately.

DESIGNATED USE

The tractor mower is intended for mowing in domestic gardens and allotments with a max Slope of 27% (15°). Additional applications, such as for mulching, are only permitted if the original accessories are used and in compliance with the maximum load values. This appliance is intended solely for use in noncommercial applications. Any other uses (as well as unauthorized conversions or add-ons) are regarded as contrary to the intended use and will result in exclusion of the warranty as well as loss of conformity; the Manufacturer will thus decline any responsibility for damage and/or injury suffered by the user or third parties.

POSSIBLE MISUSE

The tractor mower is not designed for commercial use in public parks, sports grounds, agriculture, or forestry.

OPERATOR SAFETY

⚠WARNING!

1. Do not put hands or feet near rotating parts or under the machine. Keep clear of the discharge opening at all times.
2. Clear the operating area of any objects which could be thrown by or interfere with the operation of the machine.
3. Do not mow in reverse unless absolutely necessary. Always look down and behind before and while backing.
4. Children, or other people who are not familiar with the instructions for use, are not allowed to use the equipment.
5. Comply with local regulations on the minimum age of people operating the equipment.
6. Do not allow children and young people to play on the machine.
7. Only mow during daylight hours or with good artificial lighting.
8. Keep the area of operation clear of all bystanders, particularly small children. Stop the machine and attachment(s) if anyone enters the area.
9. The user is responsible for accidents involving other people and their property.
10. Only use genuine spare parts and genuine accessories.
11. Repairs on the machine must be carried out by the manufacturer or by one of its customer service centers.
12. Wear ear protection.
13. The tractor mower does not have approval for road use and may not be driven on public roads.
14. Do not mow during thunderstorms. No protection against lightning strikes.
15. Do not carry any passengers on the machine.
16. Do not use the machine on slopes with longitudinal gradients greater than 15° (27%).
17. Do not use the machine on slopes with lateral gradients greater than 10° (18%).
18. Never drive transversely to the slope.
19. Do not use the tractor lawnmower and/or any accessories attached to it in the event of fatigue, illness, or after the consumption of alcohol, drugs or medications that impair reaction time and/or ability to focus.
20. Comply with the permitted operating times in your vicinity.
21. The tractor mower can cause serious injuries due to its dead weight. Take particular care when loading and unloading the ride-on mower to transport it on a vehicle or trailer. Use full-width ramps for loading and unloading a machine for transport.
22. This tractor mower is not allowed to be towed. Use a suitable vehicle for transportation on public roads
23. Do not operate the tractor mower in poorly ventilated working areas (e.g. a garage). The exhaust gases contain poisonous carbon monoxide as well as other harmful substances. Only the engine operates in well-ventilated areas. Exhaust gases contain carbon monoxide, a deadly poison.

24. Do not change or manipulate any fixed settings for engine speed regulation.
25. Do not operate the machine without the entire grass catcher, discharge chute, or other safety devices in place and functioning properly. Check frequently for signs of wear or deterioration and replace as needed.
26. Never direct discharge of material toward bystanders nor allow anyone near the machine while in operation. Avoid discharging material against a wall or obstruction. Material may ricochet back toward the operator. Stop the blade(s) when crossing gravel surfaces.
27. Long-term exposure to noise can result in permanent hearing impairment. So always use approved hearing protection and reduce working hours.
28. To reduce the impact of noise and vibration emission, limit the time of operation, use low-vibration and low-noise operating modes as well as wear personal protective equipment.
29. Take the following points into account to minimize the vibration and noise exposure risks:
    - Only use the machine as intended by its design and these instructions. Ensure that the machine is in good condition and well maintained.
    - Use correct accessories for the machine and ensure they are in good condition.
    - Keep a tight grip on the steering wheel.
    - Maintain this machine in accordance with these instructions and keep it well lubricated (where appropriate).
    - Plan your work schedule to spread any high vibration tool used across a longer period.
    - Prolonged use of the machine exposes the user to vibrations that can cause a range of conditions collectively known as hand-arm vibration syndrome (HAVS) e.g. fingers going white; as well as specific diseases such as carpal tunnel syndrome. To reduce this risk when using the machine, always wear protective gloves and keep your hands warm.

⚠IMPORTANT! Anyone using the riding lawnmower should first be acquainted with the instructions in this manual and completely familiarize themselves with the controls to ensure correct and safe machine use.

⚠IMPORTANT!  **Anyone using the tractor lawn mower should first be acquainted with the instructions in this manual and completely familiarize themselves with the controls to ensure correct and safe machine use.**

1. Never allow children under sixteen and people not fully acquainted with these instructions to use the lawn mower. Specific national regulations may indicate the minimum operator's age.
2. Never start and use the lawn mower near other people, especially children or pets.
3. Keep in mind that the operator or user is liable in the event of accidents or damage occurring to other people or their property.

CHILDREN SPECIFICS

1. Tragic accidents can occur if the operator is not alert to the presence of children. Children are often attracted to machines and mowing activities. Never assume that children will remain where you last saw them.
2. Keep children out of the operating area and under the watchful care of a responsible adult other than the operator.
3. Do not carry children, even with the blade(s) shut off. Children could fall off and be seriously injured or interfere with safe machine operation. Children who have been given rides in the past could suddenly appear in the mowing area for another ride and be run over or backed over by the machine.

⚠ HAZARD! Do not carry passengers.

1. Such overload could negatively affect the stability of the machine and overstress the mechanical parts.
2. Do not make any changes to the machine.
3. Incorrect use of the machine as indicated in this paragraph will invalidate the warranty and relieve the manufacturer of any liability in case of any ensuring injuries or damage.

⚠ IMPORTANT! Users of the lawn mower must be in good mental and physical shape. do not use the machine when tired feeling bad or under the influence of drink, drugs, or medical products that reduce promptness of reactions.

TRAINING & PREPERATION

The driver must be suitably trained and should focus on:

1. Do not use the tractor lawnmower and/or any accessories attached to it in the event of fatigue, illness, or after the consumption of alcohol, drugs or medications that impair reaction time and/or ability to focus.
2. Be careful and concentrate during work.
3. The fact that a machine sliding down a gradient cannot be controlled using the brakes. The main causes of losing control of the machine are:
   - Lack of wheel grip.
   - Too much speed.
   - Inadequate breaking.
   - Machine not suitable for job to be done.
   - Lack of acquaintance with effects deriving from terrain conditions, especially on slopes.

The driver must be suitably prepared and should focus on:

1. During work wear solid shoes with non-slip soles and protective clothes.
2. Always use a hearing protection headset, protective eyewear, or a visor.
3. Do not use the equipment if you are barefoot or wearing sandals.
4. Do not use the equipment if you are wearing loose-fitting clothes that may get caught up.
5. Carefully inspect the area where you intend to use the lawnmower and remove any objects that could be launched by the machine.

⚠ HAZARD! DANGER! Petrol is highly flammable!

1. Keep the petrol in containers that are specifically designed for the purpose.
2. Only supply petrol outdoors, do not smoke during refueling.

FIRE AND FUEL SPECIFICS

1. Extinguish all cigarettes, cigars, pipes, and other sources of ignition.
2. Use only an approved fuel container.
3. Do not remove fuel cap or add fuel with the engine running or while hot.
4. Do not refuel indoors or in enclosed spaces.
5. Do not store the machine or fuel container, or refuel, where there is an open flame, spark, or pilot light such as on a water heater or other appliance.
6. If fuel is spilled, do not attempt to start the engine and avoid creating any source of ignition until fuel vapors have dissipated.
7. To help prevent fires: keep the machine free of grass, leaves, or other debris build up; clean up oil or fuel spillage and remove any fuel-soaked debris; allow machine to cool before storing.
8. Use extra care in handling gasoline and other fuels. They are flammable and vapors are explosive.

⚠HAZARD!  **Explosion!**

1. Supply petrol before starting the engine. Do not remove the tank cap and do not supply petrol while the engine is running or hot.
2. Should the petrol run over, do not attempt to start the engine, but move the machine well away from the spot where you spilled the petrol. Avoid any cause of spark or fire until the petrol fumes have completely disappeared.
3. Close back the petrol tank and the containers by safely tightening their caps.
4. Replace the muffler if it is faulty or damaged.
5. Before use, always visually check that the blade, the blade fastening screws, and the cutters are not worn or damaged. Replace any damaged or worn blades, as well as their fastening screws in correct series to maintain proper balancing. Repairs and maintenance of mechanical parts must be done by an authorized service center.

RULES FOR CORRECT OPERATION

⚠HAZARD!  **Do not operate the engine in a confined or restricted area where the dangerous carbon monoxide contained in the exhaust fumes may build up.**

1. Only operate on grounds that are lit by daylight or by adequate artificial lighting.
2. Before starting the engine, disengage the blade, place the gear shift in neutral "N" and engage the parking brake.
3. Avoid using the lawn mower on wet grass as much as possible.
4. Do not operate on excessively steep slopes. Check the limits indicated in the operator's manual.

⚠CAUTION!  **Risk of overturning on steep gradients.**

1. Do not use the machine on lawns with longitudinal gradients of more than 27% (15°).
2. Do not use the machine on lawns with slight side gradients above 18% (10°).

Remember, there is no such thing as a "safe" gradient. Moving on sloped lawns requires special care and experience.

SLOPE SPECIFICS

Slopes are a major factor related to accidents. Operation on slopes requires extra caution.

1. Travel in the manufacturer recommended direction on slopes. Use caution while operating near drop-offs.
2. Do not operate the machine under any condition where traction, steering, or stability is in question. Tires could slide even if the wheels were stopped.
3. Avoid starting and stopping on slopes. Avoid making sudden changes in speed or direction. Make turns slowly and gradually.

To prevent overturning:

1. Always mow either up or down, never mow across slopes.
2. Never stop or start suddenly on slopes.
3. Engage the driver gently and always keep the driver's gear engaged, especially on downward slopes.
4. Speed must be reduced on slopes and sharp bends.
5. Never move down slopes with the gear shift in neutral "N", engage a lower gear.
6. Be careful of mounds, bumps, and hidden hazards.

⚠CAUTION! The driver should be aware:

1. Use care when pulling loads or using heavy equipment:
   - Use only approved drawbar hitch points.
   - Limit loads to those you can safely control. Follow the manufacturer's recommendation for weight limits for towed equipment and towing on slopes.
   - Do not turn sharply. Use care when reversing.
   - Use counterweight(s) or wheel weights whenever advised in the operator's manual.
   - Avoid holes, ruts, bumps, rocks, or other hidden hazards. Uneven terrain could overturn the machine or cause the operator to lose their balance or footing.
2. Be very careful when changing direction on slopes.
3. Stop the blade when crossing terrains other than lawns and when the lawn mower is transported to and from the work area.
4. Do not use the lawn mower when faulty guards are without fitted safety devices, such as, for example, the grass bag.
5. Do not modify the engine adjustments and do not tamper to increase engine speed. If the speed of the engine is too high this could cause personal injuries.
6. Disengage the blade and drive control before starting the engine.
7. Hands and feet must be kept away from the blade. Always keep away from the grass unloading opening.
8. Reduce the throttle during engine run-out. If the engine is provided with a shut-off valve, cut off the fuel when you have finished mowing.
9. Watch out for traffic when crossing or near roadways.
10. Never direct discharge of material toward bystanders nor allow anyone near the machine to be in operation.

Before leaving the driving seat:

l. Place the gear shift in neutral "N" and engage the parking brake.
2. Disengage the blade and lower the blade deck.
3. Stop the engine and remove the key.

⚠HAZARD! **Before carrying out any inspection, cleaning, and servicing operations on the machine, stop the engine, take out the ignition key and follow the instructions in the operator's manual.**

⚠HAZARD! **The blades are sharp, risk of a serious injury!**

Before carrying out any inspection, cleaning, and repair operations on the cutting parts, stop the engine and take out the ignition key. Next, disconnect the spark plug wire and keep the cap away from the plug to prevent accidental starting.

⚠HAZARD! **The blades are sharp, risk of a serious injury!**

1. Wait for the blade and all the moving parts to come to a halt before touching them. The blade will continue turning for some time after switching off the engine or disabling the blade control.
2. Disengage the blade during transport and every time it is not used.

Stop the engine, remove the key, and disengage the blade:

1. Before leaving the machine.
2. Before filling up with petrol.
3. Before adjusting the cutting height if the operation is not performed from the driving seat.

Make sure the accelerator is set at a minimum before switching off the engine. Stop the engine, remove the key, and disconnect the spark plug wire:

1. If you knock against a foreign body, stop the engine, disconnect the spark plug wire, and carefully inspect the lawn mower for any damage.
2. Have any damage repaired before you start the engine again. Use the services of an authorized service center. Should the machine display unusual vibrations, stop the engine, and immediately seek the cause of the vibrations, as a rule, unusual vibrations are an indication of a problem.

GENERAL MAINTENANCE

1. Make sure all the nuts and screws are tight, so the lawnmower is in good operating condition and safe to use.
2. Wait for the engine to completely cool down before cleaning, adjusting, or repairing.

⚠DANGER! **Risk of burns!**

3. Never store the lawn mower in a secluded area with petrol in the tank, as the fumes may reach a naked flame or a source of sparks.
4. Wait for the engine to cool down, before storing the lawn mower in a secluded area.
5. In order to reduce the risk of fire, keep the engine, the muffler (battery housing) and petrol deposited area free of grass leaves or excessive grease.
6. For safety reasons, repair any worn or damaged parts only using original spare parts. Non-original spare parts may not suit properly and cause damage and dangers.
7. Should you need to empty the fuel tank, do so in the open.
8. When the machine must be parked, stored, or left unattended, lower the blade deck, and remove the ignition key to prevent unauthorized persons starting the machine.
9. Regularly check, or have an after-sale center check, the tightening of the blade and of the engine supporting bolts.

10. Blade sharpening and balance adjustment, including removal and refitting, are demanding operations and will require specific competence, as well as special equipment. Especially for safety reasons these operations must be carried out by a specialized after-sale center. The same applies for replacing the blade with a new one.
11. Use caution when servicing blades. Wrap the blade(s) or wear gloves. Replace damaged blades. Do not repair or alter blade(s).

⚠ CAUTION! Wear heavy gloves.
The lawn mower blade is sharp and can cut the skin. You need to take the necessary precautions whenever you work near or on the blade.

MACHINE SAFETY

Your lawn mower has been designed in accordance with specific safety standards.
Safety systems operate as follows:
Prevent the engine unless all machine's safety conditions are in place.

Conditions to be compiled with
1. Start switching to the end position.
2. Parking brake engaged.
3. Cutting blade disengaged.
4. Forward/Reverse, pedal in neutral position.
   - In case even one safety condition lacks, stop engine.

The engine stops if:
1. The operator leaves the driving seat with blade rotation enabled.

⚠ HAZARD! Never tamper with the safety switches and their power leads.
In case of a mistake, do not use the machine but contact PRORUN Customer Service.

⚠ WARNING! Danger if protective devices are removed or manipulated!
Do not operate with any protective devices removed or manipulated. Defective protective devices must be repaired or renewed immediately!
Above all, the protective devices include:
1. Brake contact switch.
2. Mower mechanism contact switch.
3. Seat contact switch.
4. Mower mechanism covers.
5. Belt covers.

⚠ WARNING! Dangers due to overloading the ride-on mower! Make sure that the permissible inclines/declines are not exceeded. Exceeding these values may exceed the braking capacity of the ride-on mower and lead to dangerous situations!

NOTE Bear in mind that the ride-on mower is not approved for road use and thus is not allowed to be driven on public roads.

5. SYMBOLS

Your machine must be used with care. This is why labels with illustrations have been placed on the machine, to remind you of the main precautions to take during use.
These labels are to be considered an integral part of the machine.
Should a label come off or become illegible, contact PRORUN Customer Service to replace it.
Their meaning is explained below.

SYMBOL	MEANING
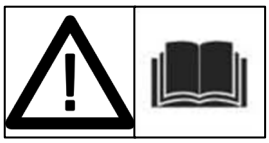	**WARNING:** Read the instructions before operating this machine.
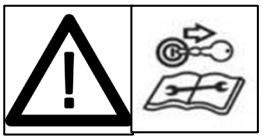	**WARNING:** Disconnect the ignition key and read the instructions before carrying out any repair or maintenance work.
	**WARNING:** No step on the deck or discharge guard. **WARNING:** Do Not Step.
	**DANGER! EJECTED OBJECTS:** Do not operate without the discharge guard or grass-catcher in place.
	**DANGER! EJECTED OBJECTS:** **WARNING:** Keep bystanders away.
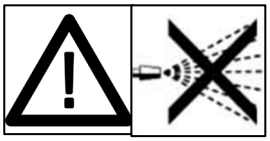	**WARNING:** Never use pressure lances to wash the transmission system.
	**DANGER! RISK OF BURNS:** Wait for the engine to completely cool down before making any adjustments or servicing the engine itself.

	**DANGER!** Risk of overturning on steep gradients.
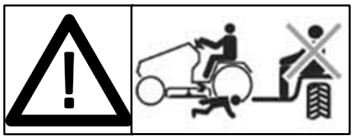	**WARNING:** Never carry children
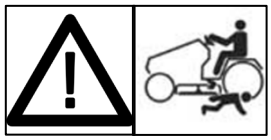	**WARNING:** Never carry children(continued).
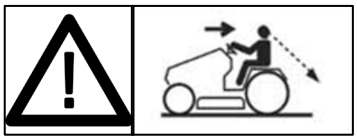	**WARNING:** Be careful when you operate the product rearward. Look behind and down for small children, animals or other risks that can cause you to fall.
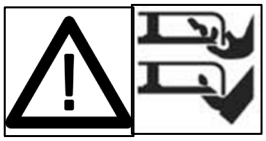	**WARNING:** KEEP HANDS and FEET AWAY.
	**WARNING:** Never open or remove shields.
	**WARNING:** BEWARE OF THROWN OBJECTS.
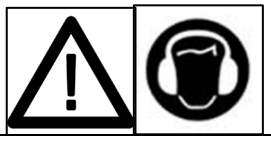	**WARNING:** Use approved hearing protection.
	**WARNING:** Do not use the machine on slopes with longitudinal gradients greater than 15° (27%). **WARNING:** Do not use the machine on slope on slopes with lateral gradients greater than 10° (18%).

LABEL POSITION

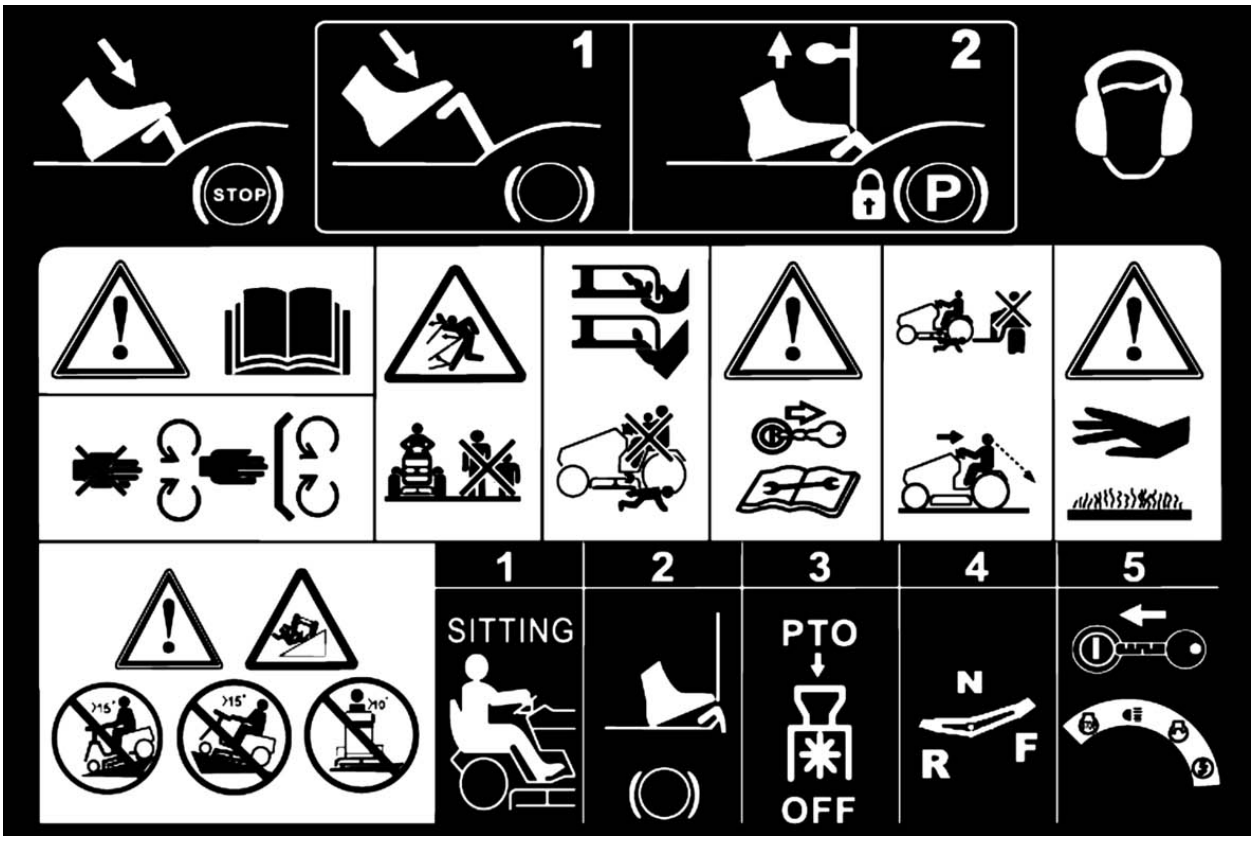

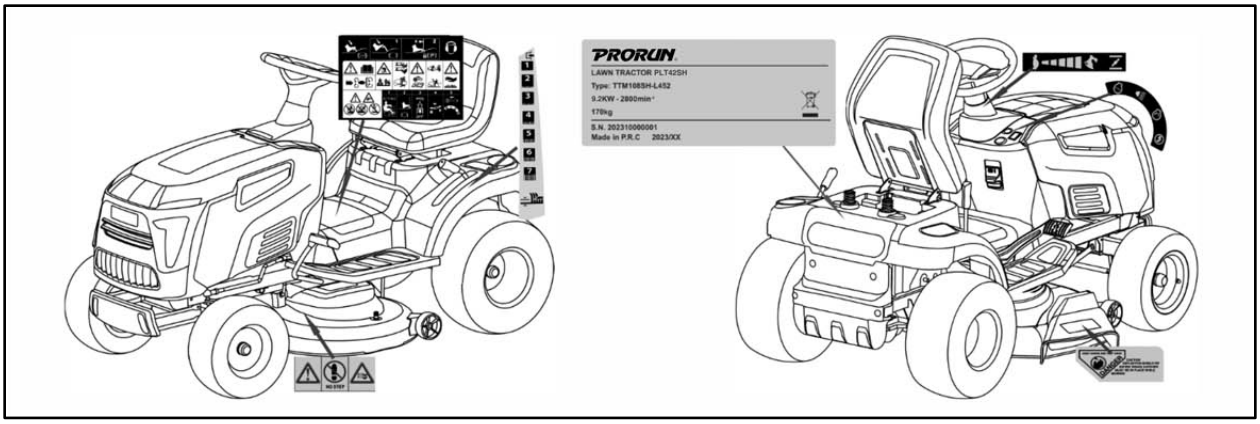

IDENTIFICATION OF THE MAIN COMPONENTS

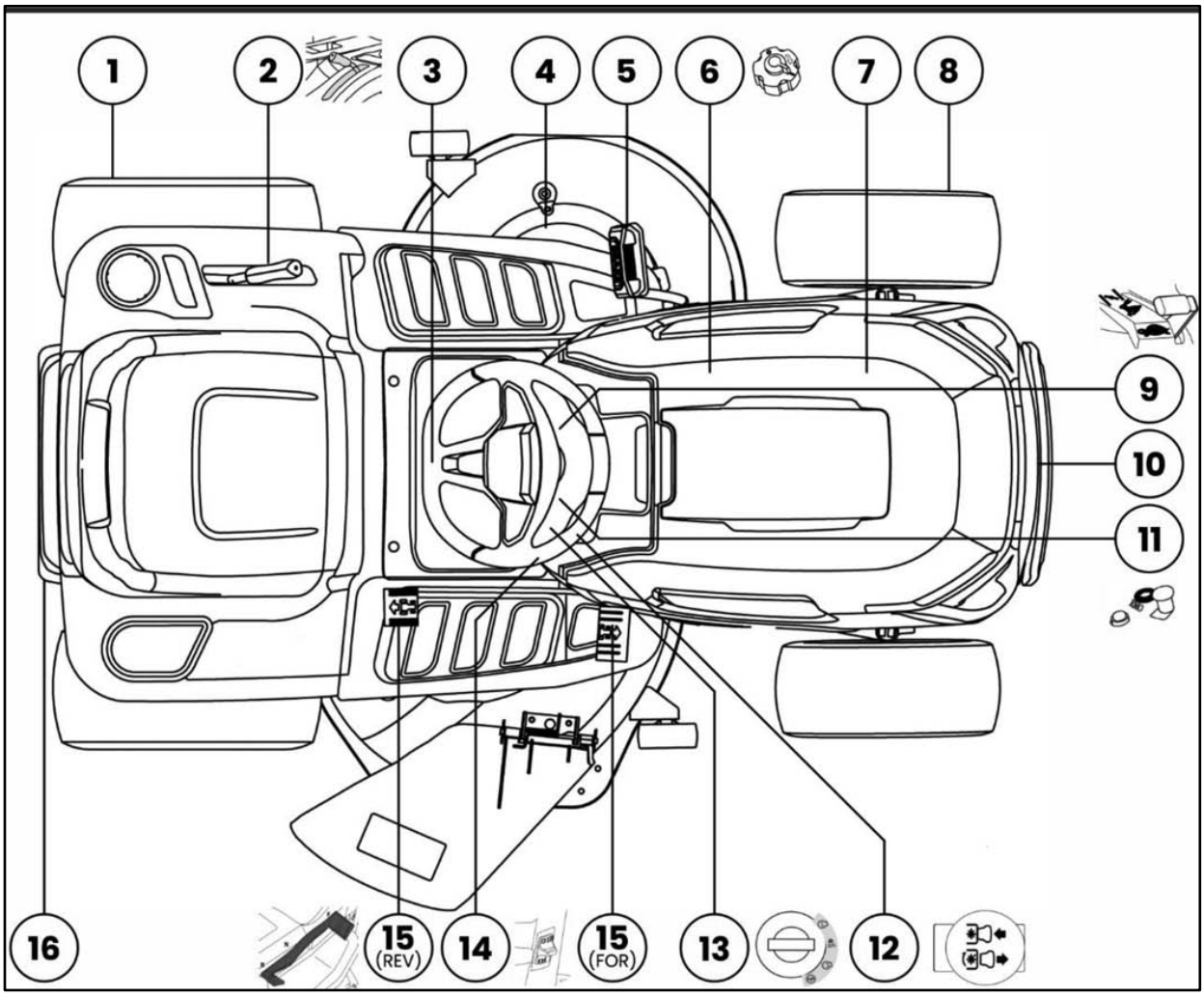

1	Rear Wheels
2	Cutting Height Adjustment Lever
3	Steering Wheel
4	Deck
5	Brake Pedal
6	Fuel Cap/ Fuel Shut Off Valve (under Engine Cover)
7	Engine Cover
8	Front Wheels

9	Throttle Lever
10	Guard Plate
11	Reverse Mode Operation Button
12	Blade Start / Stop Knob
13	Key - Ignition Switch
14	Park Brake Lever
15	Drive Engagement (F - N - R)
16	Hydrostatic Transmission Disengagement

6. SETUP

UNPACKING AND ASSEMBLY

OPENING THE PACKAGING: The machine is shipped partially dismantled and packaged in a metal crate to protect it during transport. The packaged machine will appear as in Fig l.

⚠CAUTION! **Wear heavy gloves.**

1. Remove all the shrink wrap and cut the three plastic straps that surround the package.
2. Lift off the corrugated exterior cover assembly.
3. Remove the six screws near the front of tractor (Fig 2A) and remove the wooden cross plank from the base pallet. (Fig 28).

⚠CAUTION! To prevent damaging the blade deck and blade, move the cutting deck to its maximum height before driving the tractor off the wooden base platform.
Be careful when performing this delicate unpacking operation.

⚠ IMPORTANT! ADDENGINE OIL AND FUEL BEFORE PROCEEDING TO STEP 4 AND STARTING THE RIDER!

⚠ IMPORTANT! BEFORE PROCEDING TO STEP 4:
Follow instructions in the Operator's Manual to install the steering wheel (section 3.2.1FITTING THE STEERING WHEEL) and seat (Section 3.2.3 FITTING THE SEAT).

4. After installing the steering wheel and seat, and filling the tractor with gas and oil, increase the tractor's cutting deck height **(4.2.8 CUTTING HEIGHT ADJUSTMENT LEVER (2**)) to its maximum level.
5. Follow the instructions in section **4 CONTROLS AND STARTUP** and carefully drive the tractor forward off the wooden base platform. (Fig 2C)

Fig 1A

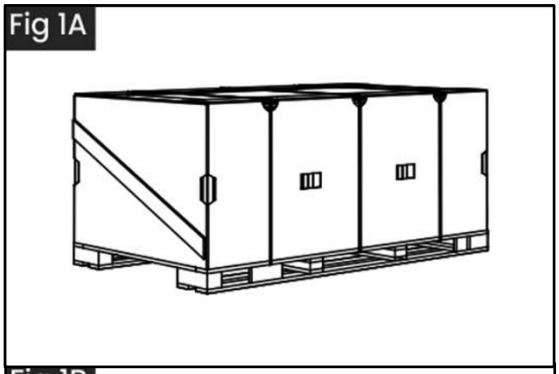

Fig 1B

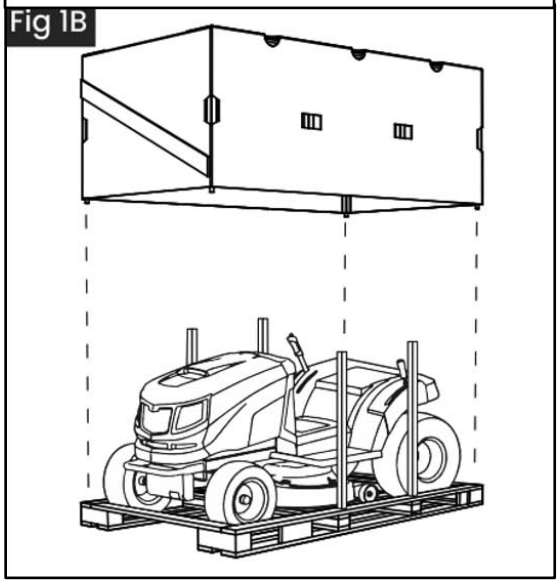

Please See 21 & 22 for seat install

Fig 2A

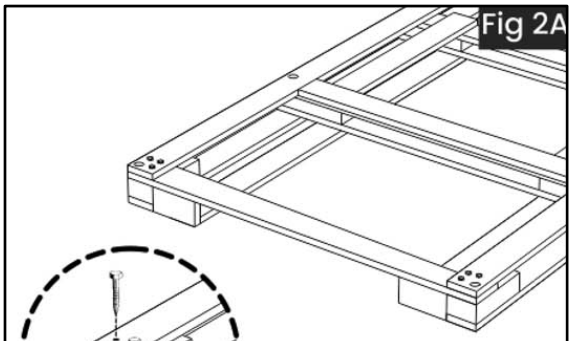

Fig 2B

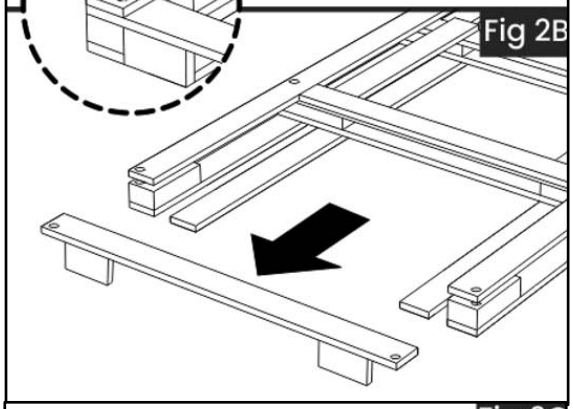

Fig 2C

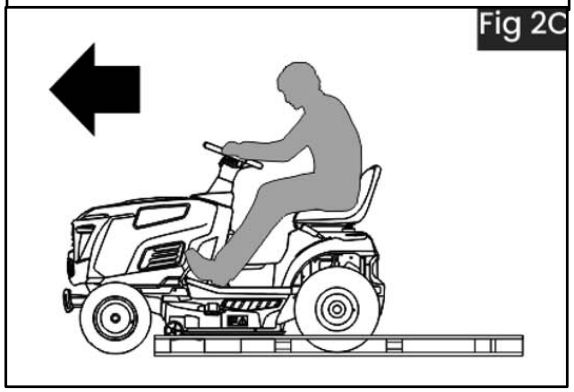

MACHINE PARTS

When unpacking the machine, take care to gather all individual parts and fittings, and do not damage the cutting deck when taking the machine off the pallet.

1. **Machine**
2. **Steering connects shaft and Splined hub**
3. **Towing kit**
4. **Bumper**
5. **Bumper bracket L**
6. **Bumper bracket R**
7. **Steering wheel cover**
8. **Steering wheel**
9. **Steering shaft cover**
10. **Operator's manual**
11. **Nuts, bolts, washer, bushing**
12. **Seat**
13. **Tools and Starter key**
14. **Side deflector**
15. **Deck fixing plate**
16. **Mulching Kit**

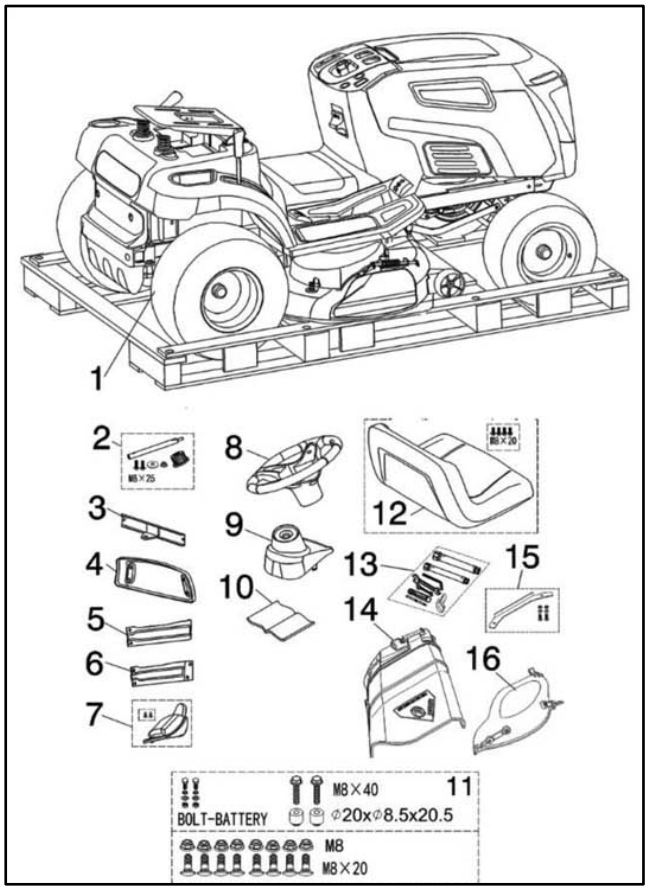

NOTE To prevent damage to the cutting deck, raise it to its maximum height and take utmost care when taking the machine off the pallet.

MACHINE ASSEMBLY

FITTING THE STEERING WHEEL

Put the machine on a flat surface and straighten up the front wheels.

1. Fit the shaft (1) onto the couplings and tightening the screw M8x25 (2) (Use the open-end wrench 8-10 in accessories tools).
2. Fit the steering shaft cover (3).
3. Inset the splined hub (4) to shaft (1), mounting steering wheel (5), spacer (6) and tightening nut MS (7) (Use the open-end wrench 13-15 in accessories tools).
4. Insect the steering wheel cover (8) into the steering wheel and tighten two screws ST4.8xl6 (9) (Use the Philips screwdriver in accessories tools).

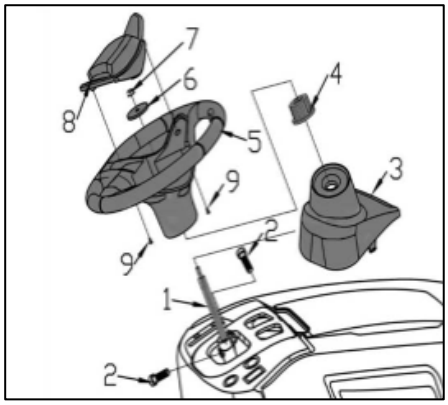

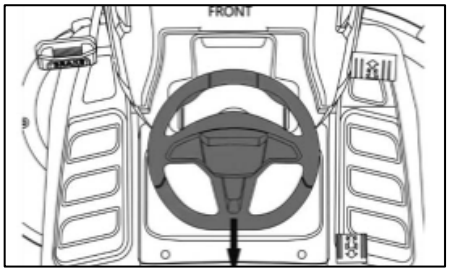

NOTE **Pay attention to the orientation of the parts when mounting the steering wheel.**

FITTING THE DECK WHEELS

1. Assemble the two Deck Wheels with the designated Pin, Lock Nuts, and Bolts as illustrated.

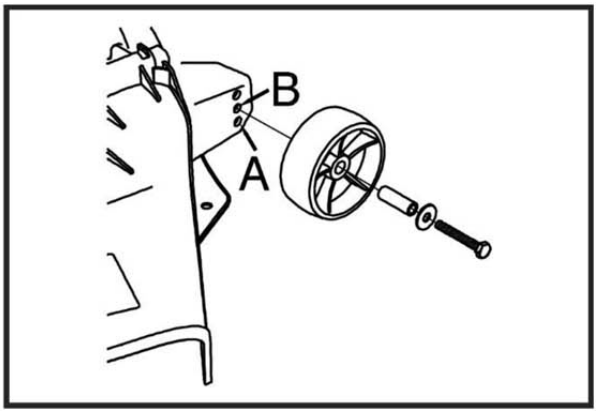

FITTING THE SEAT AND OPERATOR PRESENCE SWITCH

1. Unfasten the two M8 nuts and bolts (A) from the Seat Brackets located on top of the mower. (use the 13-15 open-end wrench from the accessories tools kit)
2. Mount the Seat onto the Seat Brackets using the released two M8 nuts and bolts (A) as illustrated.
3. Connect the Wire Harness (B) to the Operator Presence Switch (C) located under the seat as illustrated.

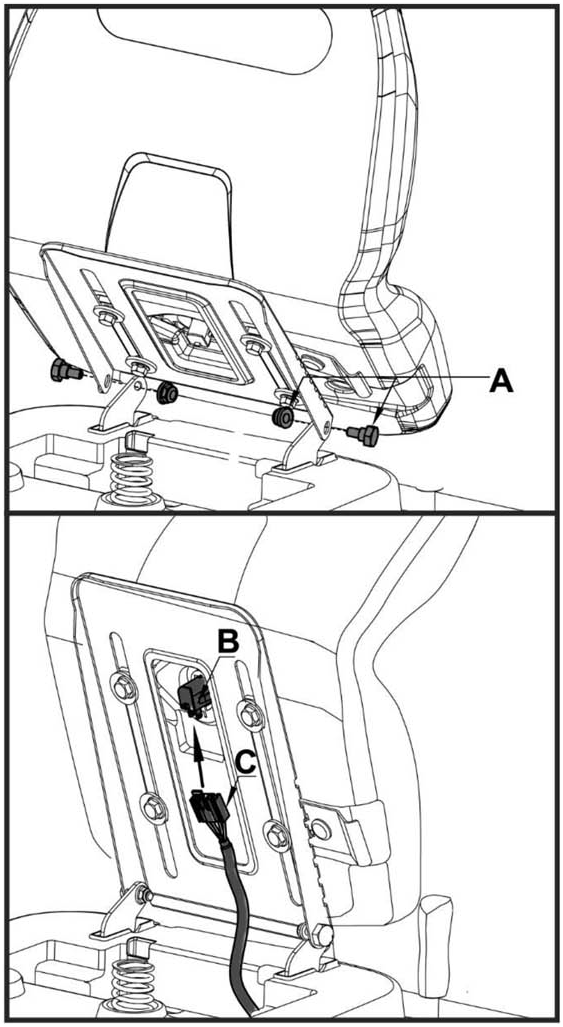

NOTE Be sure that the connection is complete.

⚠IMPORTANT! The total weight (trailer and load, including the operator) must not exceed 136 kg (300 lbs.). See complete notes under REGULATIONS FOR TOWING.

CONNECTING THE BATTERY

⚠HAZARD! **Sulfuric acid is poisonous.** Electrolytic fluid is a solution to sulfuric acid.

⚠HAZARD! **Sulfuric acid is corrosive.** Sulfuric acid can cause blindness or severe burns.

⚠HAZARD! **Never throw the battery away into the environment.**

Follow local authorities' deposals methods when changing batteries.

1. Fit the battery in its housing.

⚠IMPORTANT! Position the battery with the polarities and0 as indicated.

2. Connect the battery connectors to the machine connection leads and tighten the two screws. then cover the protective cap for the two wires in place. (Use the open-end wrench 8-10 and cross screwdriver in accessories tools)
3. Secure the battery with a small rubber strap.

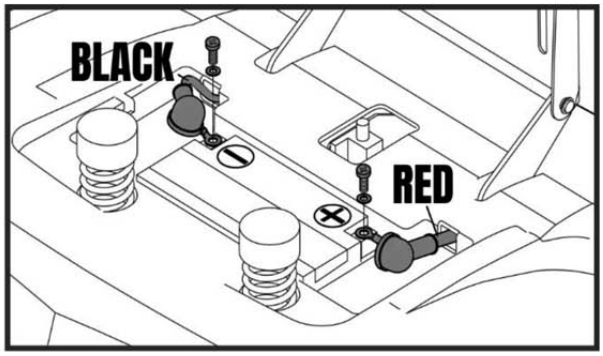

NOTE THIS MACHINE USES 12V / 18Ah BATTERY.

The battery is fully charged before leaving the factory. If the battery is found to be insufficient, please use a 12V 1A charger to charge the battery.

MOUNTING THE FRONT BUMPER

1. Mount the bumper bracket L and 1 bumper bracket R on the bumper, using four M8 nuts and four M8 x 20 screws. (Use the open-end wrench 13-15 in accessories tools.)
2. Mount the front bumper on the bottom of the frame using the four MB nuts and four MB x 20 screws. (Use the open-end wrench 13-15 in accessories tools.)

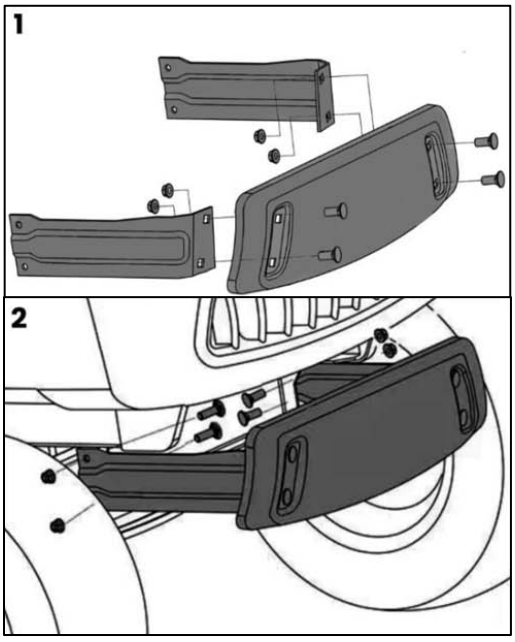

MOUNTING THE MULCHING KIT

If you decide to mow, mulch, and leave the grass on the lawn, assemble the mulching kit on the cutting deck as indicated below.

1. Open the side deflector up.1
2. Pass the pivot boss (M) on the mulching kit under and through the bottom of the side deflector's pivot pin (N) (Figure 1).
3. insert the right dowel pin into the hole of deck (Figure 2, Detail c).
4. Insert the left dowel pin (E) into the middle hole of deck on the left.
5. Put down the side deflector (Figure 3).

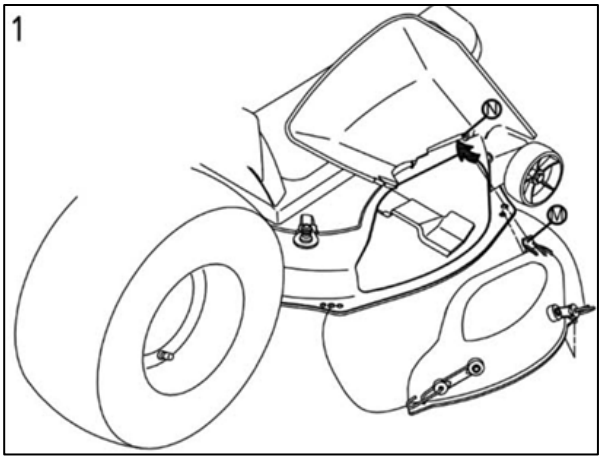

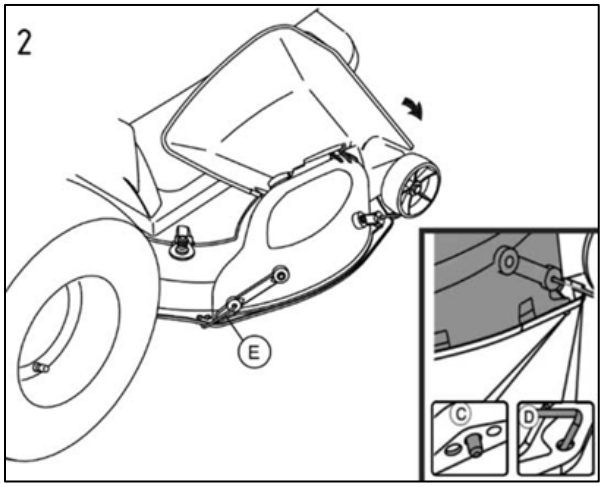

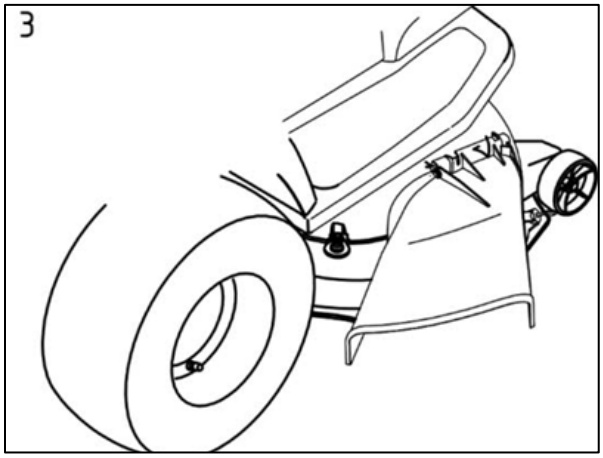

MOUNTING THE SIDE DEFLECTOR

1. Insert the elastic pin (1) and washer (2) into the right end of the pin (3).
2. Insert the pin shaft into the side deflector (4), bracket (6) and torsion spring (5) in sequence and insert the washer (2) and elastic latch (1) at the other end.

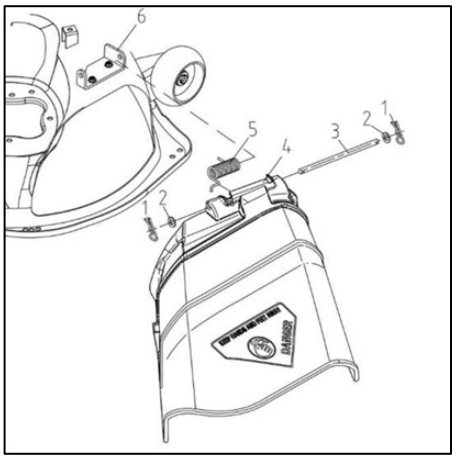

NOTE When you need to open the side deflector, please press the self-locking button first, and do not force it to open.

MOUNTING THE TOWING KIT

1. Remove the tension arm bushing (2), the hexagonal flange bolts M8 X 20 (3), and the hexagonal flange locking nuts M8 (1) that secures the gearbox cover (4).
2. Insert the bushing (2) into the two holes where the bolts were just removed, align the towing plate (5), and then install the hexagonal flange bolts M8 X 40 (3),
3. Remove the tension arm bushing (2), the hexagonal flange bolts M8 X 20 (3), and the hexagonal flange locking nuts M8 (1) that secured the gearbox cover (4).
4. Insert the bushing (2) into the two holes where the bolts were just removed, align the towing plate (5), and then install the hexagonal flange bolts M8 X 40 (3), hexagonal flange locking nut M8 (1), and then tighten the bolt.

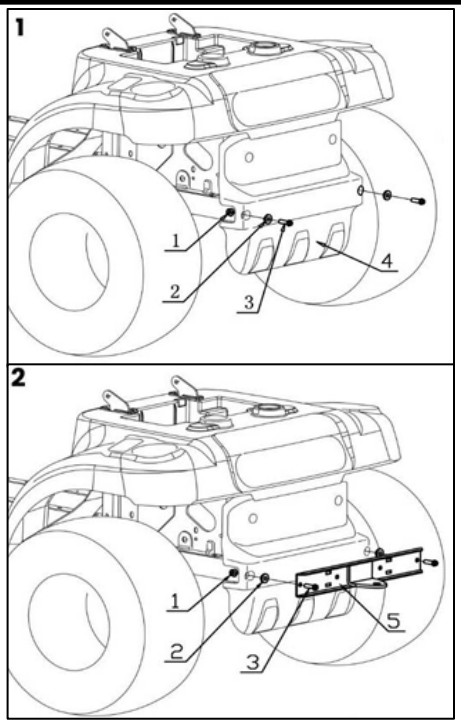

⚠IMPORTANT! REGULATIONS FOR TOWING

The total weight capacity (trailer and load, including the operator) must not exceed 136 kg (300 lbs.) and must not exceed a tongue weight (up or down) of 25 kg (55 lbs.) See Illustration.

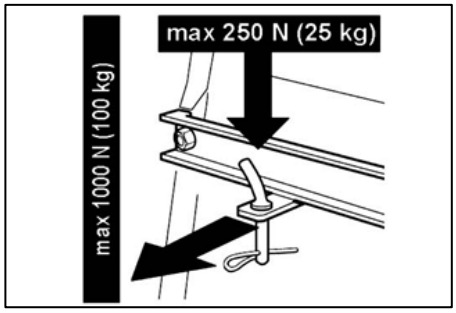

NOTE This accessory is to be fitted following the instructions provided.

7. CONTROLS AND OPERATIONS

CHECKING THE FUEL AND OIL

⚠IMPORTANT! Only the preliminary machine control functions are explained in this chapter. To enable the controls (subsequently)refer to the following chapters.

⚠HAZARD! Filling up must be done with the engine switch off in an open and well-ventilated environment.

Always remember that petrol fumes are highly flammable.

DO NOT USE OPEN FLAMES NEAR THE MOUTH OF THE TANK TO CHECK THE LEVEL, AND DO NOT SMOKE WHEN FILLING UP.

⚠IMPORTANT! The machine is shipped without lubricating oil in the engine.

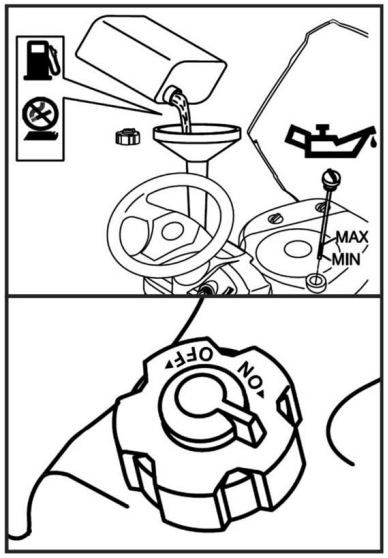

⚠CAUTION! Irreparable damage to the engine:
Fill up with oil before starting the engine.

NOTE The engine manual indicates what type of oil and fuel you can use.

OIL:

1. Locate the machine on level ground.
2. With the engine off, check the oil level.
3. Use oil grade according to the instructions in the engine manual.
4. Fill between the MIN and MAX marks on the dipstick.

FUEL:

1. Refuel using a funnel, but do not completely fill the tank.
2. The tank's capacity is liters.
3. Before operating the mower, open the Fuel Shutt Off Valve on the fuel cap to ON.

⚠IMPORTANT! Do not drip petrol onto the plastic parts to avoid damaging them. In the event of accidental spills or leaks, rinse immediately with water. The warranty does not cover damage to plastic parts of the bodywork, or the engine caused by petrol.

NOTE Keep the petrol in a container designed for the purpose and with a properly tightened cap.

8. CONTROLS AND CONTROL INSTRUMENTS

THROTTLE LEVER (9)

This regulates the engine revs, The positions are indicated on a label showing the following symbols:

- **CHOKE** position: Cold starting
- **SLOW** position: Engine minimum speed
- **FAST** position: Engine top speed

The **CHOKE** position enriches the mixture so must only be used for the time necessary when starting from cold. When moving from one area to another, put the lever in a position between **SLOW** and **FAST**.
When cutting, shift it too **FAST**.

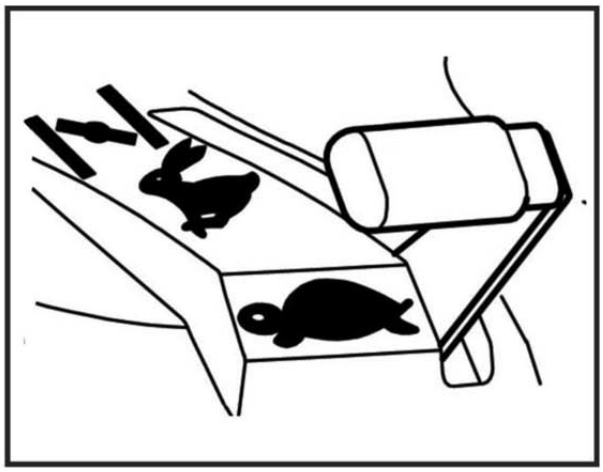

STEERING WHEEL (3)

Directly steers the front wheels.

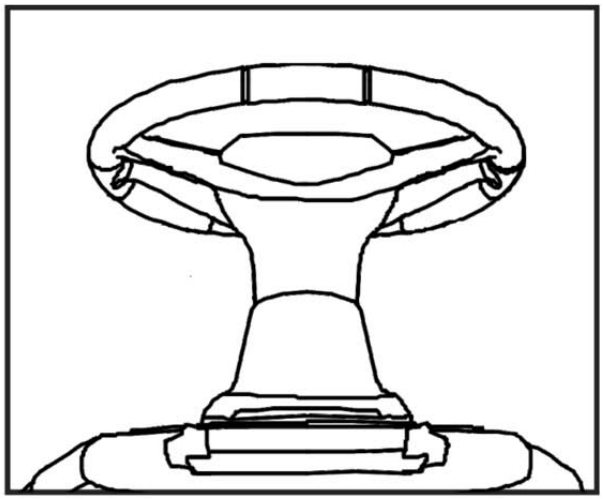

BLADE START/STOP KNOB (12)

The blade start/stop knob is located on the RH console in front of the key switch. The blade start/stop knob operates the electric clutch.

Pull the knob upward to engage the blades or push the knob downward to disengage the blades.

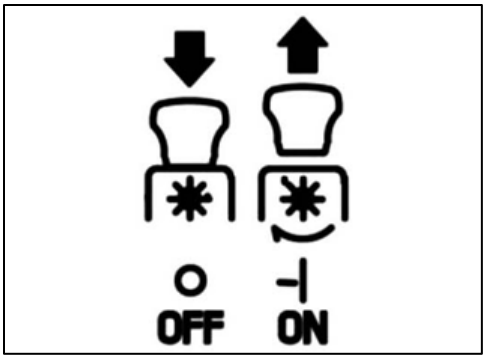

IGNITION SWITCH (13)

This key operated control has four positions:

OFF position: Everything is switched off.

ON position: Activates all parts except the headlight.

START position: Makes electrical contact and engages the starter motor. If you release the key on **START**, it will automatically return to **ON**.

When the key is in this position, power is sent to the headlights.

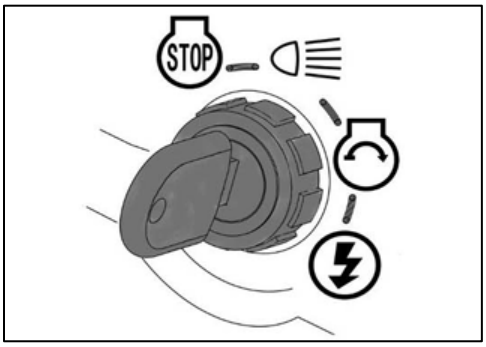

BREAK PEDAL (5)

The brake pedal is located on the left front side of the board.

The brake pedal can be used for sudden stops or setting the parking brake.

NOTE When the machine is moving, keep your foot off the brake pedal.

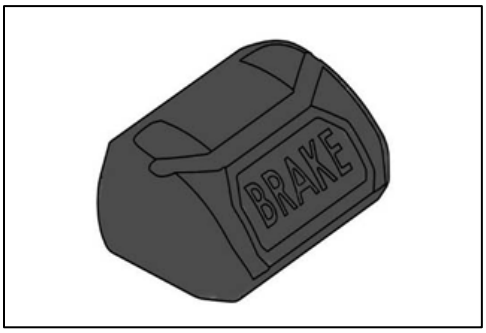

PARKING BRAKE LEVER (14)

With machine stopped:

- Keep the brake pedal pressed.
- Lift the parking brake lever and keep lifted.

Release the pedal:

- This way, the rear wheels remain braked. To release the parking brake, fully press the brake pedal (the parking brake lever is automatically released and returns to its down position).

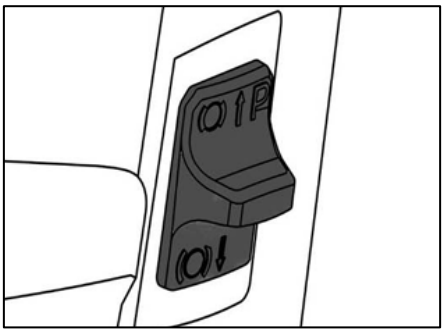

NOTE The engine can only be started in the parking position, while sitting on the machine and with either the parking brake lifted, or brake pedal pressed.

DRIVE ENGAGEMENT (15) (for hydrostatic transmission)

This pedal engages drive in the wheels as well as modulating the machine's forward and reverse speeds.

1. To engage forward drive, press it towards F with your toecap. As you increase the pressure on the pedal, the speed of the machine increases.
2. The reverse is engaged by pressing the pedal with the heel towards R.
3. The pedal automatically goes into neutral N when released.

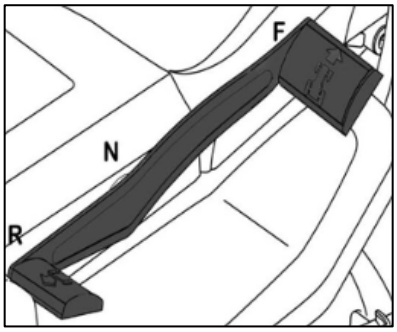

⚠ WARNING! The reverse must only be engaged when the machine is stopped.

Make sure the parking brake has been released before driving the mower.

CUTTING HEIGHT ADJUSTMENT LEVER (2)

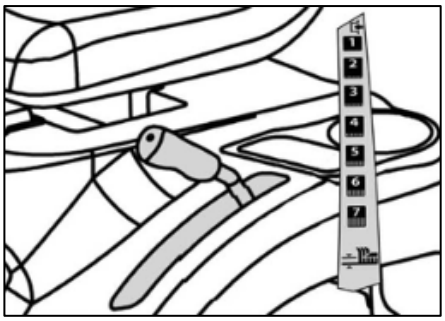

There are seven positions for this lever (shown as «1» to «7» on the label), which correspond to various heights between 30 and 90 mm.

⚠WARNING! Lower Cutting Height Settings have more potential for scalping, especially on uneven terrains.

REVERSE MODE OPERATION BUTTON (RMO) (11)

The reverse mode operation knob is located on the RH console to the left of the blade start/stop knob. The blades will stop when traveling reverse. When traveling in reverse, press the RMO button to reengage the rotation of the blades.

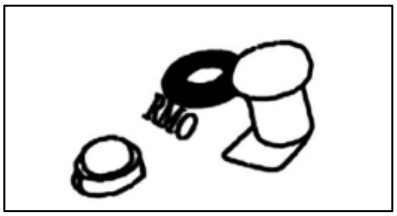

NOTE When traveling in reverse the blades will stop.
If the blades are rotating when traveling reverse, press the RMO button. Turning off the Blade Start/stop Knob (12) or restarting the engine will unlock the reverse mowing.

NOTE Mowing in reverse is not recommended.

SAFETY RECOMONDATIONS

⚠DANGER! The machine must only be used for the purpose for which it was designed (cutting grass). Do not tamper with or remove the safety devices fitted on the machine.
REMEMBER THAT THE USER IS ALWAYS RESPONSIBLE FOR DAMAGE AND INJURY TO OTHERS.
Before using the machine:

1. Read the general safety regulations, paying particular attention to driving and cutting slopes.

2. Carefully read the instructions for use. Make sure you are familiar with the controls and know how to stop the blades and the engine quickly.
3. Never put your hands or feet next to or beneath the rotating parts and always keep away from the exit.
4. Do not use the machine when in a precarious state of health or under the effect of medicine or any other substances that can reduce your reflex actions and your ability to concentrate. It is the user's responsibility to assess the potential risk of the area where work is to be carried out, and to take all the necessary precautions to ensure his own safety and that of others, particularly on slopes or rough, slippery, and unstable ground.
5. Do not leave the machine on high grass with the engine running to avoid the risk of starting a fire.
6. Do not use the machine without the side deflector in place.

⚠WARNING! Do not use the machine on lawns with gradients of more than 15° (27%).
Do not use the machine on lawns with side gradients above 10° (18%).
If the machine is likely to be used mostly on sloping ground fit counterweights beneath the cross-member of the front wheels. These improve stability at the front and reduce the chances of tipping over.

⚠IMPORTANT! All the references relating to the positions of control are described in CONTROLS AND INSTRUMENTS.

WHY THE SAFETY DEVICES CUT IN

The safety devices work in two ways:

1. They prevent the engine from starting if all the safety requirements have not been met.
2. The safety devices stop the engine if any of the safety requirements is not met.

a) To start the engine, it is necessary that:

- The blades are not engaged.
- The parking brake is engaged, and the transmission is disengaged.
- The operator sits on the seat.

b) The engine stops when:

- The operator leaves his seat while mowing or driving.

DIRECTIONS BEFORE STARTING WORK

Before starting to mow, it is necessary to carry out several checks and operations to ensure you can work efficiently and in maximum safety.

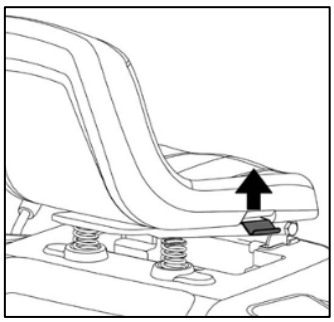

SEAT ADJUSTMENT

To adjust the position of the seat, lift the seat adjustment lever up, Slide the seat forward or backward to the desired position; then release the seat adjustment lever.

NOTE Make sure the seat is locked into position before operating the tractor.

TIRE PRESSURE

Having the right tire pressure is the main condition for ensuring that the cutting deck is horizontal and mows evenly. Unscrew the valve caps and connect a compressed air line with a gauge to the valves.

Tire Pressures:

FRONT: 1.2 bar/ 17.4 PSI (15 x 6.0-6)

REAR: 1.0 bar/ 14.5 PSI (18 x 8.5-8)

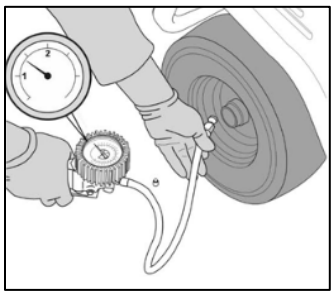

CHECKING MACHINE SAFETY AND EFFICIENCY

1. Check that the safety devices function as described.
2. Check that the brake is in perfect working order.
3. Do not start mowing if the blades vibrate or if you are unsure whether they are sharp enough.

Always remember that:

1. l. A badly sharpened blade pulls at the grass and causes the lawn to turn yellow.
2. A loose blade causes unwanted vibrations and can be dangerous.

⚠WARNING! Do not use the machine if you are unsure whether it is working safely or efficiently. If in doubt, contact PRORUN Customer Service or your authorized service provider immediately to make the necessary checks and repairs.

HYDROSTATIC TRANSMISSION DISENGAGEMENT LEVER

This lever has two positions as shown on the label:

«A» = Transmission engaged: for all uses, when moving and during cutting.

«B» = Transmission disengaged:

This makes it much easier to move the machine by hand, with the engine stopping.

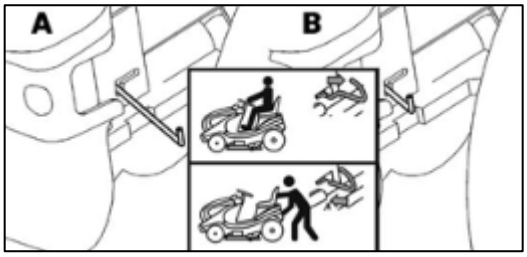

OPERATIONS STARTING

⚠DANGER! ALWAYS REMEMBER THAT EXHAUST GASES ARE TOXIC!

The engine must be started in an open or well-ventilated area!

⚠IMPORTANT! The choke must be opened as soon as the engine is running smoothly. Using it when the engine is already warm can foul the spark plugs and cause the engine to run erratically.

NOTE If there are engine starting problems, do not persist as you can risk running the battery flat and flooding the engine. Turn the key to OFF, wait for a few seconds and then repeat the operation. If the malfunction persists, refer to the engine manual.

⚠IMPORTANT! Always bear in mind that the safety devices prevent the engine from starting if safety requirements have not been met. In these cases, once the situation has been corrected, the key must first be turned back to **OFF** before the engine can be restarted.

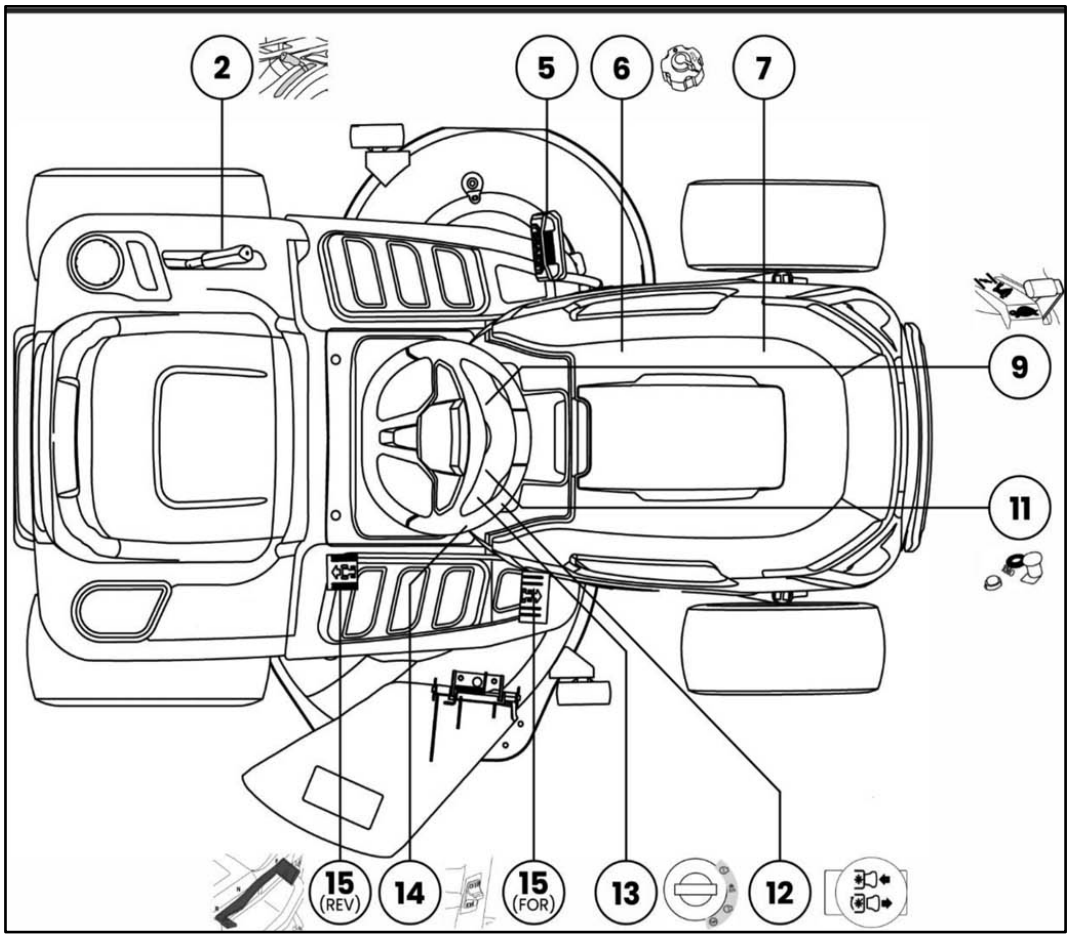

TO

START THE ENGINE:

1. Open the **Fuel Shut Off Valve on Fuel Cap** (6) to **ON**.
2. Close the **Engine Cover** (7).
3. Use Cutting **Height Adjustment Lever** (2) to lift the cutting deck as high as possible.
4. Use **Blade Start I Stop Knob** (12) and disengage the blades.
5. Shift the **Drive Engagement** (15) to neutral **N**.
6. Depress the Brake Pedal (5) and then engage the Park Brake Lever (14).
7. When starting from cold, move the Throttle Lever (9) to the CHOKE position shown on the label.
8. If the engine is already warm, position the Throttle Lever (9) between SLOW and
9. FAST.
10. Put in the Ignition Key (13) and turn to ON to make electrical contact and engage the starter motor, then turn to START to start the engine.
11. Release the Ignition Key (13) once the engine has started.
12. After the engine has started, move the Throttle Lever (8) to SLOW.

TRANSPORTING WITHOUT MOWING

⚠WARNING! This machine has not been approved for use on public roads. It must be used (as indicated by the highway code) in private areas closed to traffic.

When moving the machine, the blades must be disengaged, and the cutting deck raised as high as possible. (Position 7):

1. Use Blade Start I Stop Knob (12) and disengage the blades.
2. Use Cutting Height Adjustment Lever (2) to lift the cutting deck as high as possible (position 7).
3. Position the Throttle Lever (9) between SLOW and FAST.
4. Disengage the Parking Brake and release the Brake Pedal. Press the Drive Pedal in direction F (Forward) and reach the required speed by gradually increasing pressure on the pedal and working the throttle.
5. Gradually reach the desired speed using the Throttle Lever (9).

⚠WARNING! The Brake Pedal (5) must be released gradually as a sudden engagement may cause the machine to tip over and the driver to lose control.

BRAKING

1. First, reduce the speed of the machine by using the Throttle Lever (9).
2. Next, push the Brake Pedal (5) down to lower the speed even more until the machine stops.

REVERSE

⚠IMPORTANT! Reverse must be engaged only when the machine has stopped completely.

1. Press the Brake Pedal (5) until the machine comes to a complete stop.
2. When the machine is completely stopped, start the reverse movement by pressing the Drive Engagement (15) to reverse R direction.

GRASS CUTTING

To start cutting:

1. Move the **Throttle Lever** (9) to **FAST.**
2. Raise the **Height Adjustment Lever** (2) as high as possible (position 7).
3. Use **Blade Start I Stop Knob** (12) and engage the blades.
4. Start moving forwards on the grass by utilizing the **Drive Engagement** (15) very slowly and with utmost caution, as already described.
5. Regulate the cutting height and speed while considering the conditions of the height, density, and dampness of the grass.

⚠ WARNING! When cutting on sloping ground, reduce your speed to ensure safe conditions.

1. Whatever the conditions, always reduce the speed if you notice a drop in engine speed.
2. If you travel too fast compared to the amount of grass being cut, you will not be able to mow the grass well.
3. Disengage the blades and raise the cutting deck as high as possible whenever you need to get past an obstacle.

⚠ IMPORTANT! This machine has not been approved for mowing when driving in reverse.

1. The blades will stop when the machine is placed in reverse by pressing the Drive Engagement (15) to reverse R.
2. Press the Reverse Mode Operation Button (RMO) (11) (right of the steering wheel) to override and keep the blades rotating when the mower is moving in reverse R.

OPERATING TIMES AND DAYS

The time of operation of the lawnmower could be regulated by specific national or local laws. Contract the local authorities for more information.

END OF MOWING

When you have finished mowing:

1. Use the Blade Start I Stop Knob (12) and disengage the blades.
2. Use the Throttle Lever (9) to lower the engine speed.
3. Raise the Height Adjustment Lever (2) as high as possible (position 7).
4. Drive the machine to your destination.

END OF WORK

1. Bring the machine to a complete stop.
2. Move the **Throttle Lever** (9) to **SLOW** and turn off the engine by turning the **Key Ignition Switch** (13) to **OFF**.
3. Engage **Park Brake Lever** (14).
4. When the engine has stopped, rotate the **Fuel Shut Off Valve** on the **Fuel Cap** (6) to closed **OFF**.
5. Remove the **Ignition Key** (13)

⚠WARNING! To avoid backfire, position the Throttle Lever (9) to SLOW for 20 seconds before stopping the engine.

⚠WARNING! Always remove the Ignition Key (13) before leaving the machine unattended!
To keep the battery charged, do not leave the Ignition Key (13) in the ON position when the engine is not running.

CLEANING THE MACHINE

1. After use, clean the outside of the machine, empty the discharge chute, and shake it to remove grass and other debris.
2. Clean the plastic parts of the body with a damp sponge using water and detergent, taking care not to wet the engine, the electrical parts or the electronic circuit board located under the dashboard.

⚠IMPORTANT! ⚠✕ **Never use hose nozzles or harsh detergents to clean the bodywork or the engine!**
When washing the inside of the cutting deck, the machine must be on firm ground with:

- The discharge chute fitted.
- The operator seated.
- The engine running.
- The transmission is Neutral N.
- The blades engaged.

1. Connect a water hose to each of the pipe fittings one at a time and run water through each one for a few minutes, with the blades moving.
2. When washing, the cutting deck should be in the lowest position.

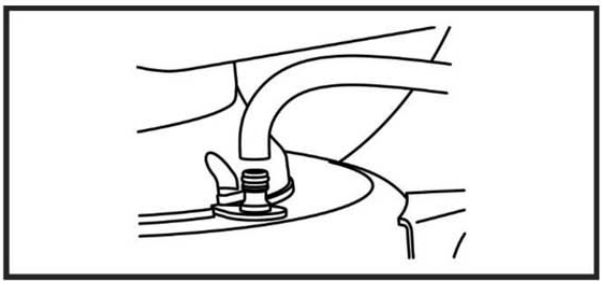

STORAGE AND INACTIVITY FOR LONG PERIODS

1. If you intend to not use the machine for a long period (more than 1 month), disconnect the battery cables and follow the instructions in the engine instruction manual.
2. Empty the fuel tank by disconnecting the tube situated at the inlet of the fuel filter and follow the instructions in the engine manual.

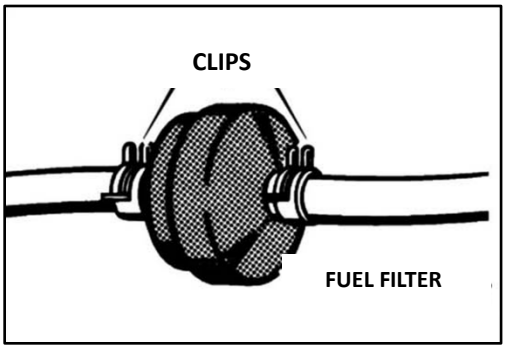

⚠WARNING! Carefully remove any dry grass cuttings which may have collected around the engine or silencer to prevent their catching fire the next time the machine is used!
Put the machine away in a dry, sheltered place and preferably covered with cloth.

⚠IMPORTANT! The battery must be kept in a cool and dry place.
Before a long storage period (more than 1 month), always charge the battery, and then recharge before using again. The next time the machine is used, check that there are no fuel leaks from the tubes, fuel shut off valve or carburetor.

⚠IMPORTANT! The blades are sharp, risk of a serious injury!
Before carrying out any inspection, cleaning, and repair operations on the cutting parts, stop the engine and take out the ignition key. Next, disconnect the spark plug wire and keep the cap away from the plug to prevent accidental starting.

SUMMARY OF MAIN STEPS TO FOLLOW WHEN USING THE MACHINE

To…	You must…
Start the engine	Open the fuel shut off valve, ensure that all the conditions allowing starting are met, and then turn the key.
Go forward	Push the brake pedal down, engage the gear and then gradually release the brake pedal.
Brake or stop	Reduce the engine speed and press the brake pedal.
Reverse	Stop the machine; put it into neutral, push the brake pedal right down, engage reverse, and then gradually release the brake pedal.
Cut the grass	Fit the discharge chute; apply the throttle; engage the blades; adjust the cutting height, push the brake pedal down, engage the gear and then gradually release the pedal.
Finish mowing	Disengage the blades and reduce the engine speed.
Stop the engine	Reduce the engine speed, wait a few seconds, turn the ignition key and close the fuel shut off valve.
Store the machine	Engage the parking brake, remove the key and, if necessary, wash the machine, the inside of the cutting deck.

USING ON SLOPING GROUND

⚠WARNING!  **Do not use the machine on slopes on slopes with longitudinal gradients greater than 15° (27%).**

⚠DANGER!  **Risk of overturning on steep gradients.**

1. Only mow on slopes with gradients up to the maximum already mentioned.
2. Lawns on a slope must be mowed moving up and down and never across them.
3. When changing direction, take great care that the wheels facing up the slope do not hit any obstacles (such as stones, branches, roots, etc.) that may cause the machine to slide sideways, tip over or make you lose control.

⚠DANGER! REDUCE SPEED BEFORE ANY CHANGE OF DIRECTION ON SLOPES!
Always engage the **Park Brake Lever** (14) before leaving the machine at a standstill and unattended.

⚠WARNING! Start moving forwards very carefully on sloping ground to prevent the risk of tipping over. Reduce the forward speed before going on a slope, particularly downhill.

⚠DANGER! Never use reverse R to reduce speed going downhill.
This could cause you to lose control of the vehicle, especially on slippery ground.

DANGER! Never ride the machine on slopes in neutral gear or with the clutch out!
Always engage in low gear before leaving the machine stopped and unattended.

USE THIS SLOPE GAUGE TO DETERMINE IF A SLOPE IS TOO STEEP FOR SAFE OPERATION!

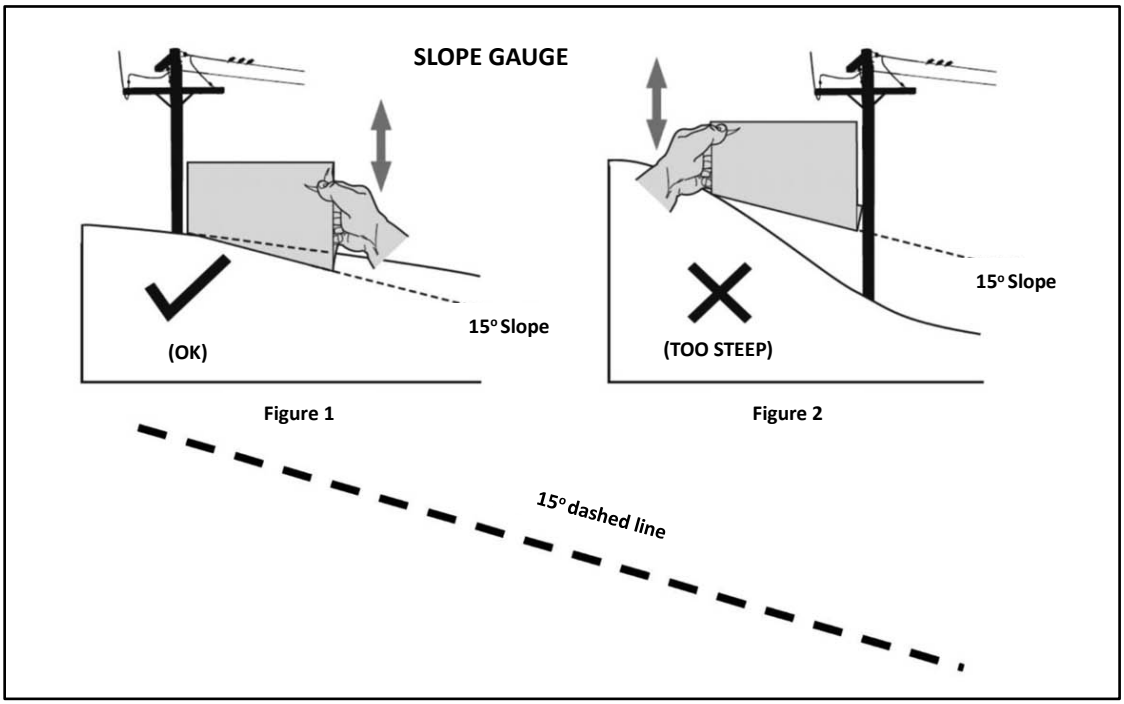

Figure 1

Figure 2

To check the slope, proceed as follows:

1. Remove this page and fold along the dashed line.
2. Locate a vertical object on or behind the slope (e.g., a pole, building, fence, tree, etc.)
3. Align either side of the slope gauge with the object (see Figure 1and Figure 2).
4. Adjust gauge up or down until the left corner touches the slope (see Figure 1 and Figure 2).

If there is a gap below the gauge, the slope is too steep for safe operation (see Figure 2 above)

⚠WARNING! Slopes are a major factor related to tip-over and accidents which can result injury or death. Do not operate machine on slope more than 15° (27%), all slopes require extra caution.

LAWN MAINTENANCE

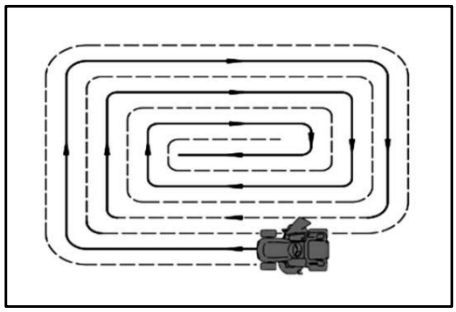

1. To keep the lawn green, soft, and attractive, it should be cut regularly without damaging the grass. A lawn can be composed of different types of grass. If the lawn is cut frequently, grass and roots grow more vigorously, forming a solid grassy bed. If the lawn is cut less frequently, higher grass and weeds start growing (plus daisies and clovers, etc.).
2. It is always better to cut the grass when it is dry.
3. The blades must be in good condition and well sharpened so that the grass is cut straight without a ragged edge that leads to yellowing at the ends.
4. The engine must run at full speed, both to ensure a sharp cut of the grass and to get the necessary thrust to push the cuttings through the collector channel.
5. The frequency of mowing should be in relation to the rate of growth of the grass. The grass should not be left to grow too much between one cut and the next.
6. During hot and dry periods, the grass should be cut a little higher to prevent the ground from drying out.
7. The best height of the grass on a well-kept lawn is approx. 4-5 cm. With one cut, you do not need to remove more than a third of the total height. If the grass is very tall, it should be cut twice in a twenty-four-hour period - the first time with the blades at maximum height, reducing the cutting width, and the second cut at the desired height.
8. When you mow large areas, start by turning to the right so that the cut grass will discharge away from shrubs, fences, driveways, etc. After one or two rounds, mow in the opposite direction making turns left until finished.
9. The appearance of the lawn will improve if you alternate cutting in both directions.
10. If the collector system tends to get blocked with grass, you should reduce the forward speed as it may be too high for the condition of the grass. If the problem persists, the probable causes are either badly sharpened blades or deformed wings.
11. Be incredibly careful when mowing near bushes or curbs as these could distort the horizontal position of the cutting deck and

9. MAINTENANCE

SAFETY RECOMMENDATIONS

⚠**WARNING! Before cleaning or doing maintenance work, take out the ignition key and read the relevant instructions.** Wear adequate clothing and work gloves whenever your hands are at risk.

⚠**WARNING! Never use the machine with worn or damaged parts. Faulty or worn-out parts must always be replaced and not repaired**. Only use original spare parts: Parts that are not of the same quality can damage the equipment and affect your safety and that of others.

⚠**IMPORTANT! Never dispose of used oil, fuel, batteries, or other pollutants in unauthorized places!**

Operation	Hours	Completed (Date or Time)						
1. MACHINE (Continued)								
1.8 Check transmission belt	Each 25 hours							
1.9 Check blade belt	Each 25 hours							
1.10 Bolt and screw check	Each 25 hours							
1.11 General Lubrication (3)	Each 25 hours							
1.12 Blade replacement	Each 100 hours							
1.13 Maintenance review (made by Authorized Dealer or Service Center)	Every year							
2.ENGINE								
2.1 First Oil change	Each 20 hours							
2.2 Engine oil change	Each 50 hours							
2.3 Air filter cleaning	Each 50 hours							
2.4 Check and adjust Spark Plug	Each 100 hours							
2.5 Fuel tank and fuel filters cleaning	Each 100 hours							
2.6 Air filter replacement	Every year							
2.7 Spark plug replacement	Every year							

The above table is here to help you maintain your machine's safety and performance. It shows the main maintenance and lubrication operations and their frequency. Use the boxes to the right to write the date or how many operating hours the work was carried out after.

⚠WARNING! All checks, adjustments and replacements not described in this manual must be carried out by your Dealer or an authorized Service Center. Both have the necessary knowledge and tools to ensure that the work is carried out correctly without affecting the safety of the machine.

ENGINE

⚠IMPORTANT! Follow all the instructions in the engine manual.

To empty the engine oil, unscrew the oil plug when refitting the plug, make sure the seal is positioned correctly.

BATTERY

The battery must be carefully maintained to ensure long life.

The machine battery must always be charged:

- Before using the machine for the first time after purchase.
- Before leaving the machine unused for a long period.
- Before starting up the machine after a long period of unuse.

1. Carefully read and observe the battery recharging instructions in the booklet provided with the battery. Failure to follow the instructions or in charging the battery could permanently damage the battery cells.
2. A flat battery must be recharged as soon as possible.

⚠IMPORTANT! Recharging must be done using a battery charger at constant voltage.

Other recharging systems can irreversibly damage the battery.

CUTTTING DECK CHECKS AND ADJUSTMENTS

The cutting deck should be properly set to obtain a good cut.

NOTE For achieving good results from cutting, the front part should always be 5-6mm lower than the rear.

1. Put the machine onto a flat surface and check the tire pressures.
2. Put 30 mm blocks under the front edge of the deck and 35 mm blocks under the rear edge and then put the **Cutting Height Adjustment Lever** (2) into position 2.
3. Adjust the left front adjuster rod, right front adjuster rod and right rear adjuster rod keep the deck in touch with the blocks.
4. Adjust the lift rod to keep the deck in touch with the blocks.

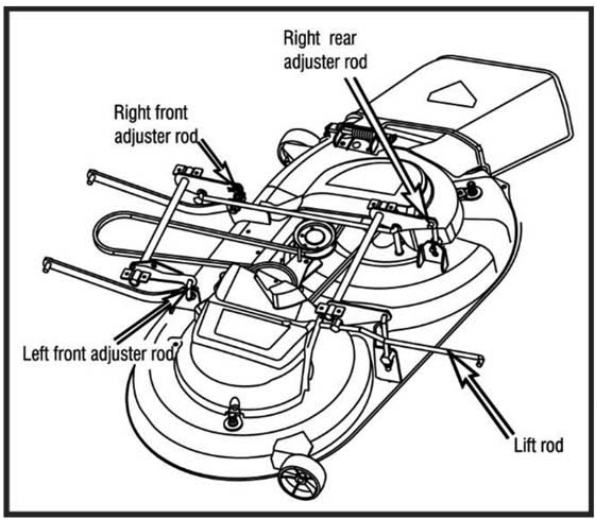

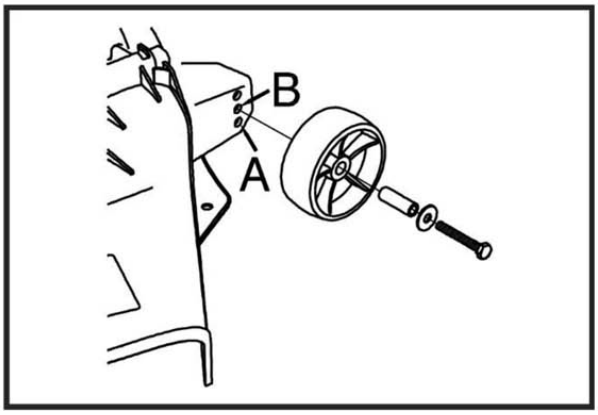

For a flat lawn, if required, you can change the position of the deck wheels to obtain a lower cut.
For a heavy lawn, it is recommended to set the wheel in the hole at **A**.
⚠IMPORTANT! In case of any doubts, do not hesitate to contact PRORUN Customer Service or your retailer.

REPLACING WHEELS

1. Stop the machine on flat ground and put a block under a load-bearing part of the frame on the side that the wheel is to be changed.
2. The wheels are held by a snap ring which can be eased off with a screwdriver.

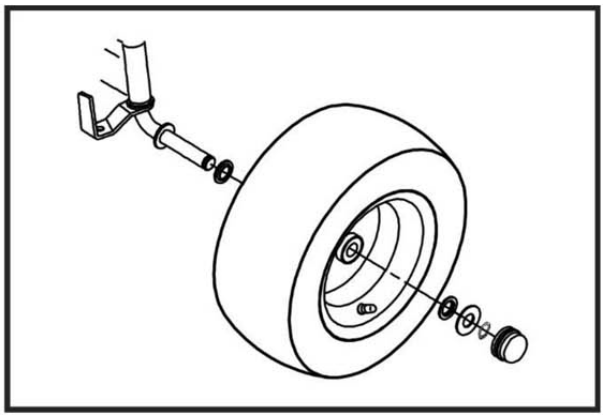

NOTE you must replace one or both rear wheels, they must have the same diameter, and check that the cutting Deck (4) is horizontal to prevent an uneven cut. You must make sure the key and washer are securely lodged in place.
⚠IMPORTANT! Before remounting the wheel, apply grease to the axle. Put the snap ring and supporting washer back in place.

REPLACING AND REPAIRING THE TIRES

The tires are "Tubeless" and so all punctures must be repaired by a tire repairer following the procedures required for this kind of tire.

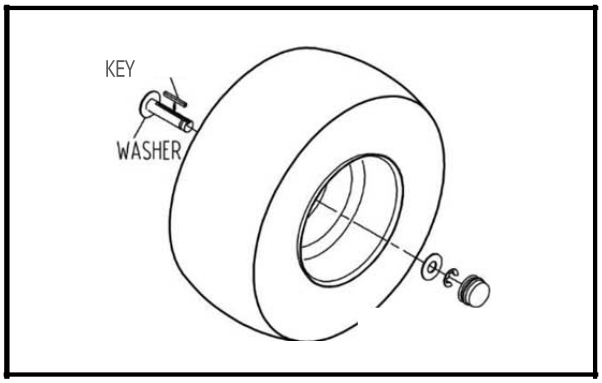

REPLACING A FUSE

The machine is fitted with 20A fuses. When it blows, the machine stops, the dashboard light switches off, the battery gradually runs out, and the machine will have problems starting. Remove the fuse and replace it with the same type of fuse.

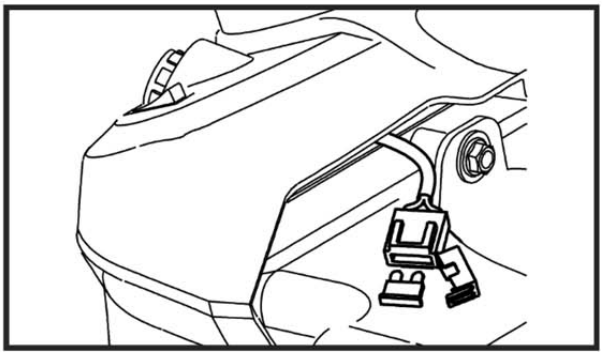

⚠ IMPORTANT! A blown fuse must always be replaced with an identical fuse rated with the same ampere. Never replace the fuse with another that is rated differently.

DISMANTLING, REPLACING AND REMOUNTING THE BLADES

A WARNING! Always wear work gloves when handling the blades. Before you inspect or remove the blade, stop the engine, and disconnect the wire to the spark plug.

⚠ WARNING! Damaged or bent blades must always be replaced; never try to repair them!

ALWAYS USE ORIGINAL BLADES BEARING THE SYMBOL "ZHONG JIAN”!

- Make sure the blades are correctly balanced.
- Make sure you put them back in the right place by referring to the code and rotating direction stamped on the outside of each blade.
- Blade models please refer to the chapter "SPECIFICATIONS".

DISMANTLING

1. Loosen counterclockwise the screw.

REMOUNTING

1. Make sure the printed code on the blade faces the operator while remounting the blade.
2. Check that the concave part of the disc washer presses against the blade.
3. Remount the shaft hubs, making sure the keys are securely lodged in place.

TIGHTENING THE SCREWS

l. Tightening clockwise with a torque wrench calibrated to 40~45 N.m.

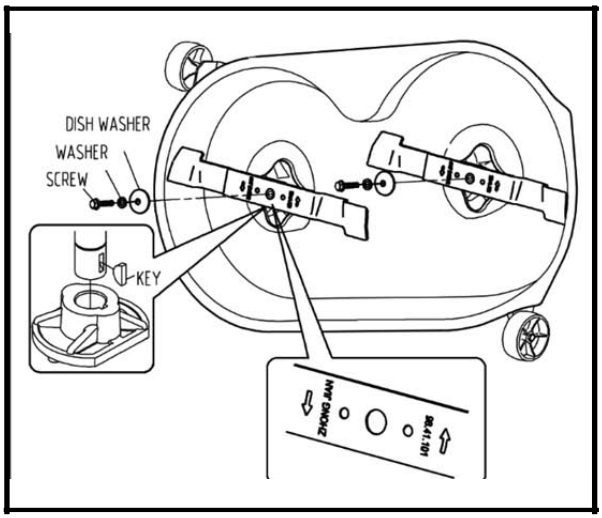

REPLACING THE BELT

The belt replacement must be conducted at a Licensed Service Centre. Replace the belts as soon as they show obvious signs of wear!

⚠ WARNING! ALWAYS USE GENUINE REPLACEMENT BELTS!

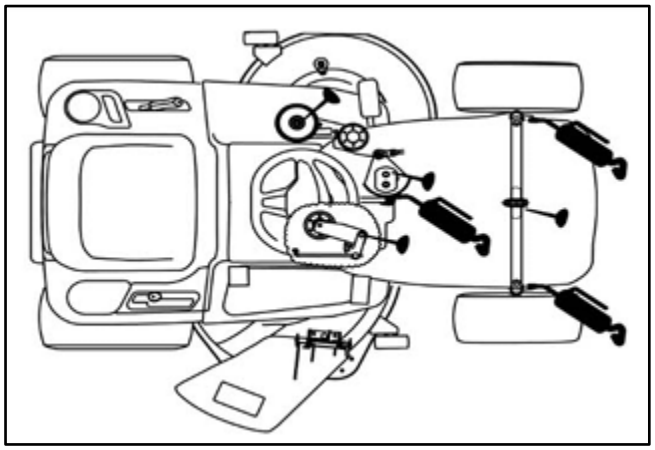

LUBRICATION

1. Apply grease with an injector to the areas shown. Apply two or three shots of grease and wipe off excess grease.
2. Lubricate the areas shown with engine oil. Wipe the area clean, apply a few drops of oil, then wipe up drips or spills.

⚠ IMPORTANT! Do not dirty the belt, brake shoe, or tire with grease or oil. Oil or grease will damage them.

TROUBLESHOOTING

⚠ DANGER **Injury hazard if engine is started inadvertently.** Protect yourself against injury.

Before conducting any work on this mower:

1. Switch off the engine.
2. Remove the ignition key.
3. Actuate the parking brake.
4. Wait until all moving parts have come to a standstill and the engine has fully cooled.
5. Pull the spark plug connector off the engine so that the engine cannot inadvertently start.

Faults which occur while you are using your mower often have simple causes which you should know and may be able to rectify yourself. If you are in any doubt, however, your dealer or authorized service center will be happy to provide assistance.

Problem	Cause(s)	Remedy
Lighting does not function.	1. Headlight wire connector not connected.	Turn the ignition key to «STOP» position and connect the headlight wire.
	2. Bulbs defective.	Turn the ignition key to «STOP» position and replace the bulbs.
	3. Battery not connected correctly.	Connect red cable to the (+) battery terminal and black cable to (-) battery terminal. (par. 3.4)
	4. Ignition switch defective	Replace ignition switch.
	5. Battery defective.	Test and recharge or replace the battery.
	6. Short-Circuit in wire harness.	Contact PRORUN Customer Service or your Dealer or Service center.

Problem	Cause(s)	Remedy
Start motor will not turn engine.	1. Starting conditions have not been met.	Check that all starting conditions are met (par. 5.4.1).
	2. No fuel in fuel tank.	Turn the ignition key to «STOP» position and refuel the fuel tank (par. 5.3.3).
	3. Poor contact between cable and battery pole.	Check the connections. (par. 3.4).
	4. Battery flat or defective.	Test and recharge or replace the battery.
	5. Fuse defective.	Replace fuse. If the fuse blows repeatedly, determine the cause (usually a short-circuit). (par. 6.4.3).
	6. Clogged air filter	Clean air filter.
	7. Spark Plug defective.	Check the connection of spark plug socket. Clean, or replace the spark plug.
	8. Brake pedal defective.	Contact PRORUN Customer Service or your service center.
	9. Start relay defective.	Replace the start relay.
	10. Ignition switch start defective.	Replace ignition switch start.

Problem	Cause(s)	Remedy
Engine runs unevenly	1. Carburetor problem.	Contact your Dealer or Service center.
	2. Air filter blocked.	Clean or replace the air filter. (See engine manual).
	3. Fuel tank ventilation blocked.	l. Check and replace the fuel filter if necessary;(see engine manual or contact PRORUN Customer Service or an authorized Service center).
		2. Empty the fuel tank and refuel with fresh fuel.
	4. Grass is too high.	Reduce the travelling speed according to the height of the grass and/or raise the cutting height.
Engine feels weak	1. Air filter blocked.	Clean or replace the air filter. (See engine manual).
	2. Engine speed too low	Increase throttle.
	3.Travelling speed too high.	Set to a lower travelling speed.
	4. Spark Plug defective.	Replace the spark plug. (See engine manual).
	5.Fuel tank ventilation blocked.	1. Check and replace the fuel filter if necessary; (see engine manual or contact PRORUN Customer Service or an authorized Service center).
		2. Empty the fuel tank and refuel with fresh fuel.

Problem	Cause(s)	Remedy
Battery does not charge	1. Fuse defective.	Replace fuse. If the fuse blows repeatedly, determine the cause (usually a short-circuit).
	2. Poor contact between battery poles and cables.	Check the connections.
Machine does not move	1. Brake is engaged.	Keep the brake pedal pressed down and release the parking brake, release the brake pedal slowly to start forward movement of the machine.
	2. Gearbox disengaged (Hydrostatic Gear).	Engage the gearbox.
	3. Drive belt detached.	Fit belt in place.
	4.Drive belt defective or worn.	Replace drive belt.
Strong vibrations	1. Blades loose.	Check and tighten all the blades (see Torque tightening par. 6.4.4) or contact PRORUN Customer Service or Service center.
	2. Engine loose.	Check and tighten all the engine and frame bolts
	3.One or both blades are imbalanced resulting from damage.	Contact PRORUN Customer Service or Service center.
	4. Cutting-means assembly is full of grass.	Clean the cutting-means assembly.
	5. Engine mounting not securely tightened.	Tighten engine mounting or contact PRORUN Customer Service or Service center.
	6. Belt damaged.	Replace Belt.

Problem	Cause(s)	Remedy
Uneven or poor cutting results	1. Blades blunt or worn.	Sharpen or replace mowing blades
	2. Different air pressures in tires on left and right side.	Check the tire pressure (par. 5.3.2).
	3. Cutting deck adjustment.	Check deck adjustment (6.3 or Contact PRORUN Customer Service or Service center).
	4. Long and/or wet grass.	Adapt cutting level and driving speed to the mowing conditions.
	5. Travelling speed too high.	Set to a lower travelling speed.
	6. Grass stuck under the cutting deck.	Cleaning inside the deck properly (Use a suitable accessory to access the cleaning of the cutting deck).
	7. Cutting the drive belt Slipping.	Replace the cutting drive belt.

If problems persist after having performed the above operations, contact PRORUN Customer Service or an authorized Service center.

MACHINE DIMENSIONS

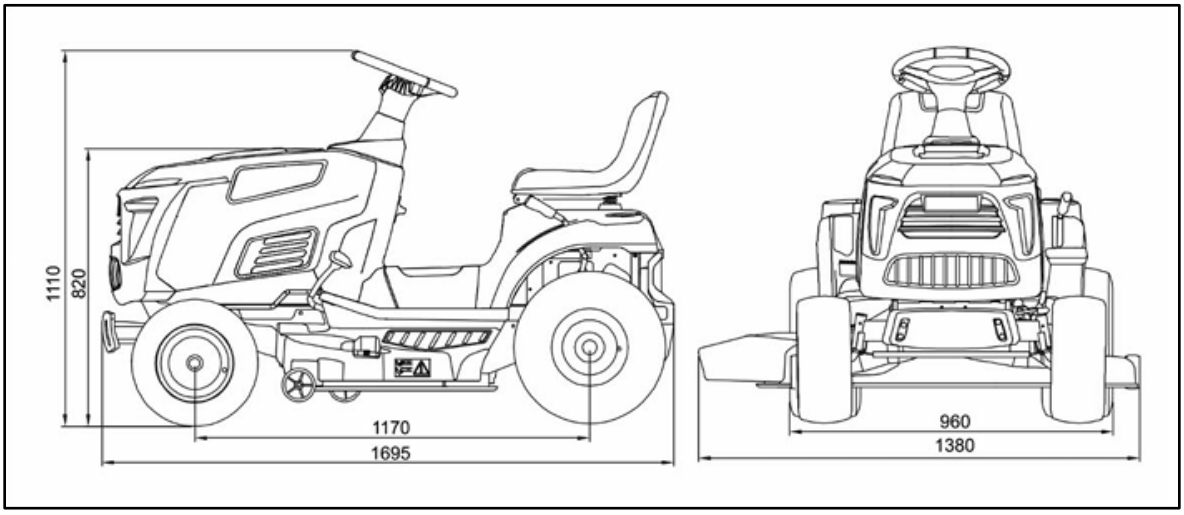

10. EXPLODED VIEWS AND PARTS

FUEL TANK ASSEMBLY

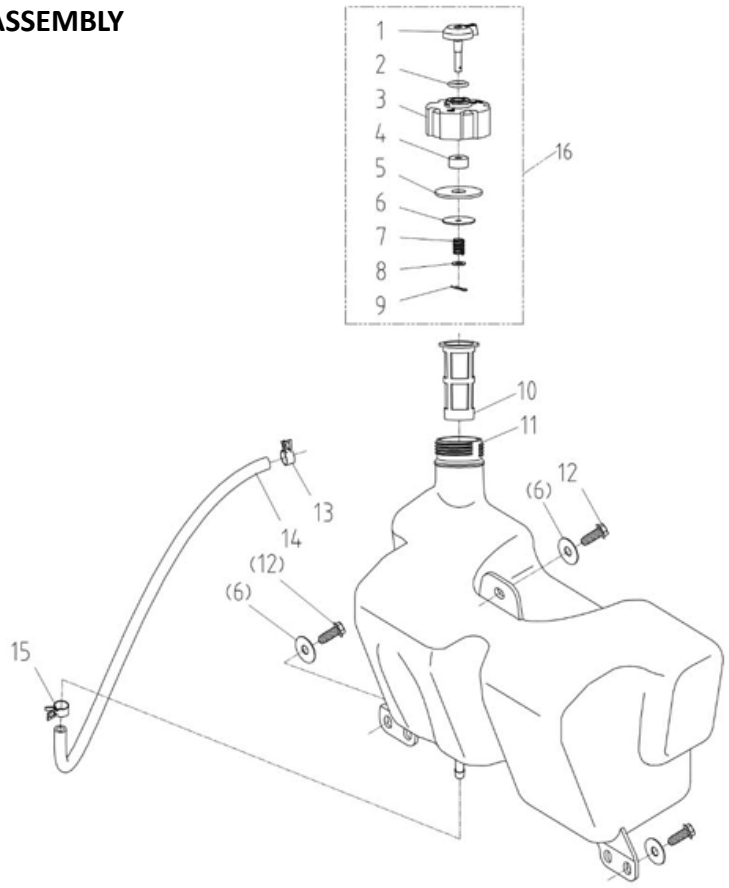

NO	PART NAME	QTY
1	FUEL TANK CAP LEVER	1
2	O RING	1
3	FUEL TANK CAP	1
4	FUEL TANK CAP FILTER	1
5	FUEL TANK CAP SEAL	1
6	GASKET 6 X 25 X 1.5	4
7	FUEL TANK CAP SPRING	1
8	WASHER 5	1

NO	PART NAME	QTY
9	SPLIT PIN	1
10	FILTER CAP	1
11	FUEL TANK	1
12	TAPPING SCREW M6-1	3
13	CLIP ϕ10	1
14	FUEL HOSE	1
15	CLIP ϕ10	1
16	FUEL TANK CAP ASSY	

DECK ASSEMBLY

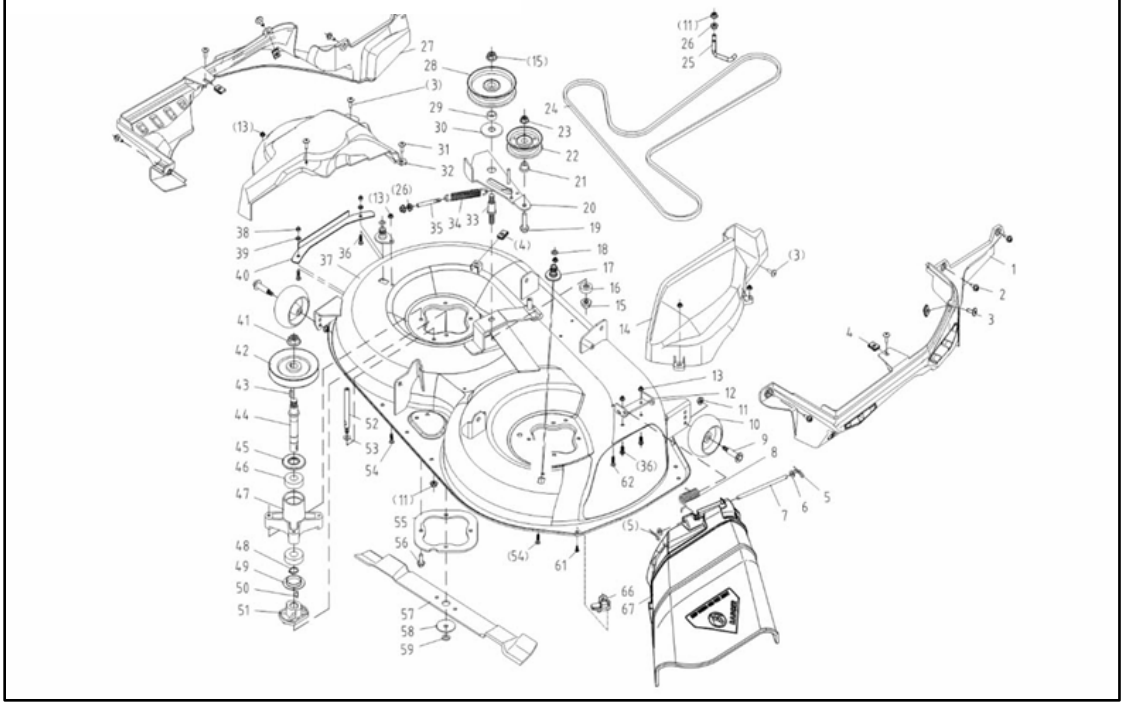

NO	PART NAME	QTY
1	BELT COVER RIGHT TTM98S / 108S	1
2	HEXAGON HEAD TAPPING	6
3	SCREW M6 X 16	7
4	BUCKLE NUT M6	5
5	SPRING PIN	2
6	WASHER 8	4
7	PIN ϕ8 X 168	1
8	TORSION SPRING	1
9	WHEEL AXLE	2
10	WHEEL	2
11	FLANGE LOCK NUT M8	1
12	HINGE	1
13	FLANGE LOCK NUT M6	1
14	RIGHT SHIELD	1
15	FLANGE LOCK NUT M12 X 1.25	2
16	BUSHING	1
17	WATER NOZZLE	1
18	O RING 11.2 X 2.65	2
19	FLANGE BOLT M10 X 1.25 X 40	1
20	CUT TENTION ARM ASSEMBLY	1
21	TENTION PULLEY BUSHING	1
22	TENTION PULLEY	1
23	FLANGE LOCK NUT M10 X 1.25	1
24	V BELT 48X920 (AKX2337)	1
25	CLUTCH BELT STOP ROD SOLDER	1
26	FLANGE NUT M8	3
27	LEFT GUARD TTM98S / 108S	1
28	IDLENESS PULLEY	1

NO	PART NAME	QTY
29	BUSHING	1
30	WASHER ϕ17.3 X ϕ55×4	1
31	SCREW M6 X 12	1
32	LEFT SHIELD	1
33	IDLENESS PULLEY SHAFT	1
34	SPRING	1
35	ADJUSTING SCREW ROD	1
36	BOLT M6 X 16	4
37	DECK WELDMENT	1
38	HEXAGON LOCK NUT M6	2
39	WASHER 6	2
40	REINFORCE PLATE TTM108S BLACK	1
41	NUT FOR BLADE AXLE	2
42	PULLEY	2
43	FLAT KEY C6 X 18	2
44	BLADE SPINDLE	2
45	HOOD, BEARING	2
46	BEARING 6204–2RZ	4
47	BLADE SEAT	2
48	SNAP RING 19	2
49	HOOD, BEARING	2
50	HALFMOON KEY 4 X 16	2
51	SLEEVE	2
52	STUD SCREW	2
53	BIG WASHER 8	2
54	SCREW M6 X 30	2
55	DECK DISC REINFORCEMENT PLATE	1
56	FLANGE BOLT M8 X 35	8
57	BLADE	2
58	DISH WASHER	2
59	WASHER 10	2
60	SELF TAPPING SCREW ST4.8 X 13	2
61	SELF LOCKING BASE TTM86S, BLACK	1
62	DISCHARGE CHUTE	1

BRAKE ASSEMBLY

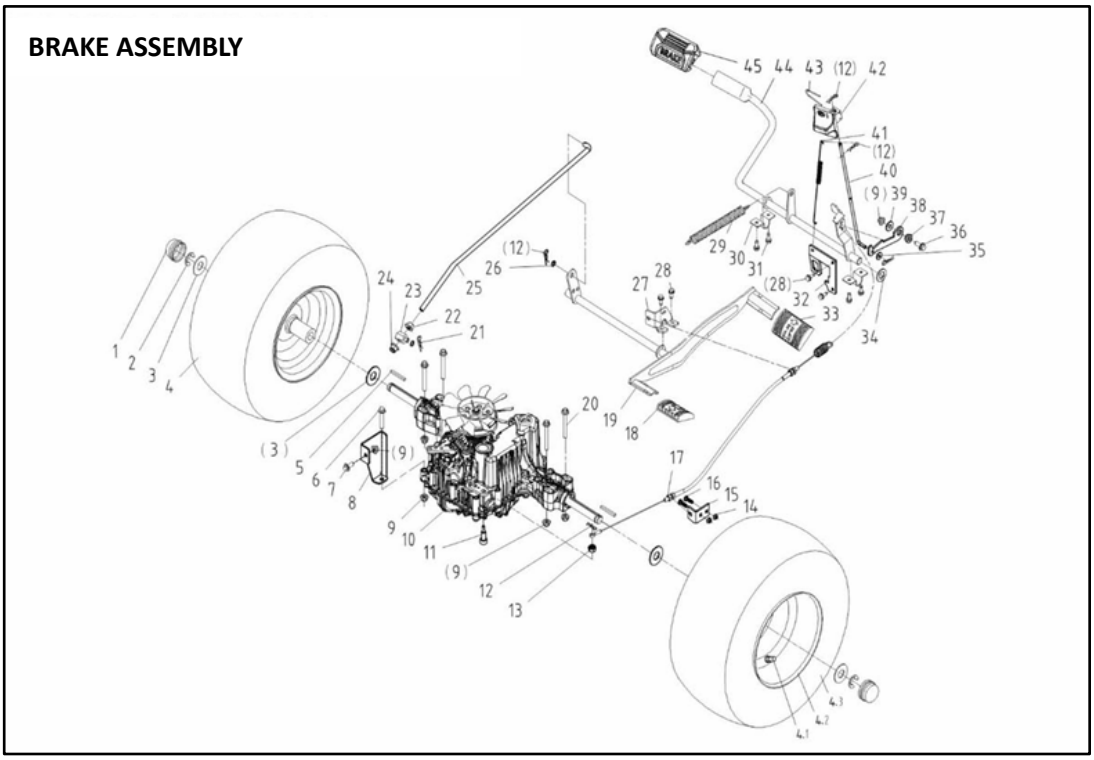

NO	PART NAME	QTY
1	HUB COVER	2
2	RETAINER RING 15	2
3	WASHER ϕ20 X ϕ43 X 3	4
4	REAR WHEEL ASSEMBLY	2
4.1	REAR WHEEL VALVE	2
4.2	REAR WHEEL HUB	2
4.3	REAR WHEEL TIRE	2
5	FLAT KEY 4.85 X 60	2
6	FLANGE BOLT M8 X 40	4
7	FLANGE BOLT M8 X 20	1
8	REAR FIXED PLATE HYD AXLE (K46)	1
9	FLANGE LOCK NUT M8	6
10	TRANSAXLE, HYDRO, TTC, K46DR	1
11	BOW-TIE COTTER PIN 2 (K46)	1
12	COTTER PIN	4
13	LOCK NUT M10	1
14	FLANGE LOCK NUT M6	2
15	CABLE SUPPORT	1
16	BOLT M6 X 16	2
17	BRAKE CABLE (K46)	1
18	REVERSE PEDAL	1
19	FOOT LEVER WELDMENT	1
20	FLANGE BOLT 8 X 65	4
21	SPRING PIN	1
22	HEXAGON NUT 10 X 1.25	4
23	PULL ROD PIN	1
24	LOCK NUT M10 X 1.25	1
25	TRAVELING PULL ROD (K46)	1
26	WASHER 10	1
27	CABLE FIXING PLATE	1
28	SELF TAPPING SCREW M6 – 16	4
29	BRAKE RESET TENSION SPRING	1
30	U-SHAPED CLAMP	2
31	FLANGE BOLT 5/16 – 18T X 3/4	4
32	BRAKE SWITCH SERT PLATE	1
33	FORWARD PEDAL	1
34	WASHER 16.5 X 30 X 1.5	1
35	WASHER 6	1
36	FLANGE BOLT M8 X 25	1
37	STEP COVER	1
38	PARKING HOOK	1
39	BIG WASHER 8	1
40	DRAG LINK, BRAKE PARKING	1
41	CLUTCH LEVER SPRING	1
42	BRAKE HANDLE	1
43	U BOLT	1
44	BRAKE FOOT BAR WELDMENT (HYDRA PRESS)	1
45	BRAKE PEDAL	1

CHASSIS ASSEMBLY

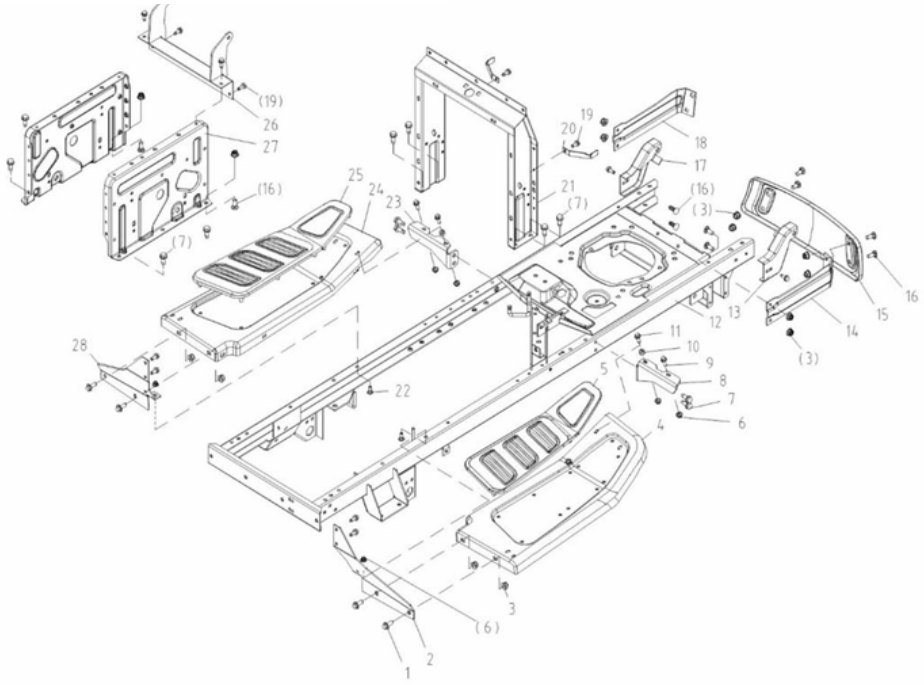

NO	PART NAME	QTY
1	FLANGE BOLT M8×20	4
2	RIGHT PEDAL HANGER	1
3	FLANGE LOCK NUT M8	14
4	RIGHT PEDAL	1
5	RIGHT FOOT PAD	1
6	HEX FLANGE LOCK NUT M6	6
7	FLANGE BOLT 5/16–18T X 3/4	24
8	PEDAL FRONT SUPPORT RIGHT	1
9	FLANGE BOLT M6×16	2
10	BUSHING	2
11	FLANGE BOLT M6×25	4
12	CHASIS	1
13	ENGINE COVER BRACKET RT	1
14	RIGHT BAMPER ROD	1
15	BAMPER	1
16	BOLT M8×20	10
17	ENGINE COVER BRACKET LEFT	1
18	LEFT BAMPER ROD	1
19	TAPPING SCREW M6×16	6
20	STEERING	2
21	STEERING BRACKET	1
22	BOLT M6×16	2
23	PEDAL FRONT SUPPORT LEFT	1
24	LEFT PEDAL	1
25	LEFT FOOT PAD	1
26	SEAT FRONT BEAM WELDMENT	1
27	SIDE PLATE	2
28	LEFT PEDAL HANGER	1

DRIVE ASSEMBLY

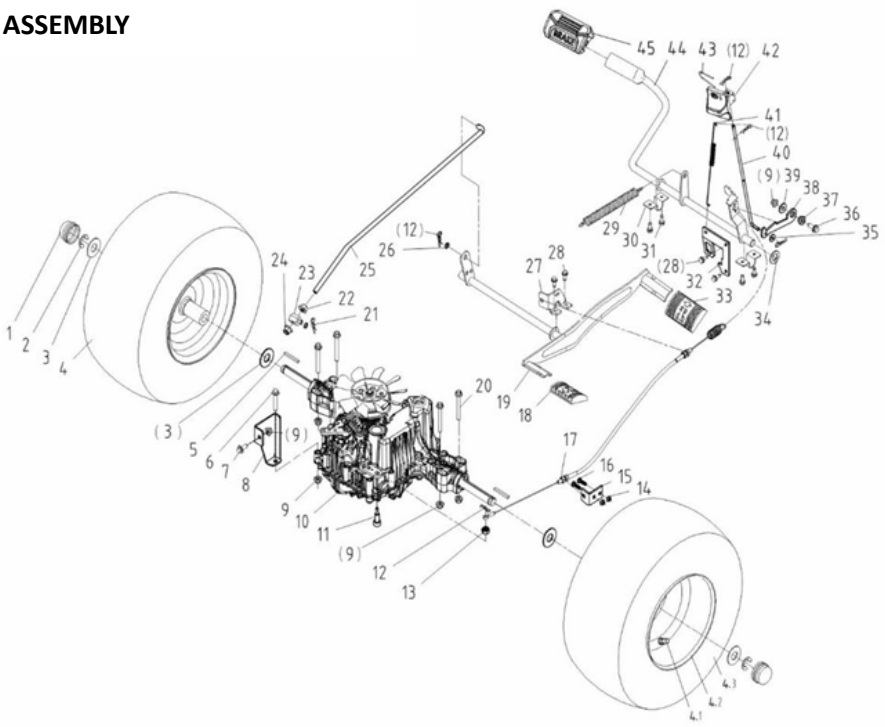

NO	PART NAME	QTY
1	FLANGE BOLT M X 60	1
2	BUSHING	2
3	SPACER ϕ8 X ϕ18 X 33	1
4	FLANGE BOLT M10 X 1.25 X 40	1
5	DRIVING TENTION ARM WELDMENT	1
6	SPRING	1
7	FLANGE NUT M8	1
8	TENTION PULLEY BUSHING	1
9	TENTION PULLEY	1
10	LOCK NUT M10 X 1.25	6
11	TENTION PULLEY	1
12	BEARING 6301-2RS	1
13	NAP RING 37	1
14	SELF TAPPING SCREWM 6–16	4
15	FLANGE BOLT M10 X 1.25 X 35	1
16	GUIDE PULLEY BASE PLATE	1
17	WASHER ϕ10 X ϕ18 X 7	1
18	BIG WASHER 10	1
19	WASHER ϕ27 X ϕ10.5 X 5	1
20	TENSIONING WHEEL BOLT	1
21	V BELT LG4–1030	1
22	FLANGE BOLT M10 X 1.25 X 50	2
23	DRIVING GUIDE PULLEY	3
24	GUIDE PULLEY CUSHION SLEEVE	2
25	OIL DRAIN ROD SEAT	1
26	OIL DISCHARGE PUSH ROD – K46 SIDE	1
27	WASHER 5	1
28	SPLIT PIN	1

ELECRICAL SYSTEM

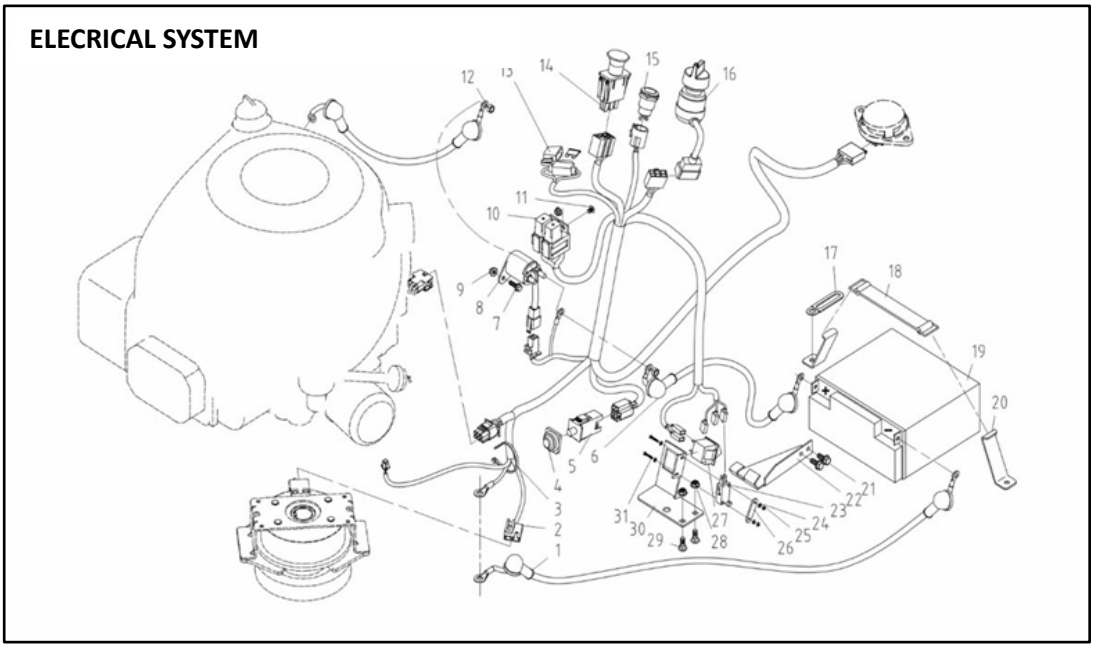

NO	PART NAME	QTY
1	GROUND CABLE	1
2	ELECTRIC CABLE (ELECTRIC START)	1
3	CABLE TIE	20
4	COVER, SWITCH	1
5	SWITCH, PLUNGER	1
6	BATTERY CABLE	1
7	BOLT M5 X 16	2
8	STAR RELAY	1
9	FLANGE LOCK NUT M5	3
10	RELAY YAP23H - 12 - HR	2
11	SCREW M5 X 12	7
12	POWER CABLE	1
13	FUSE BRM148S - 20A	1
14	SWITCH, PTO	1
15	SWITCH	1

17	WIRE CLAMP	1
18	BELT	1
19	BATTERY 12V 18AH	1
20	HOOK	2
21	TAPPING SCREW M 6-1	2
22	SWITCH LEVER	1
23	SWITCH	1
24	WASHER 3	2
25	NUT M3	2
26	WASHER	1
27	SWITCH	2
28	HEXAGON FLANGE LOCK NUT M6	2
29	BOLT M6 X 16	2
30	SWITCH BASE	1
31	SCREW M3 X 20	2

FRONT AXIL ASSEMBLY

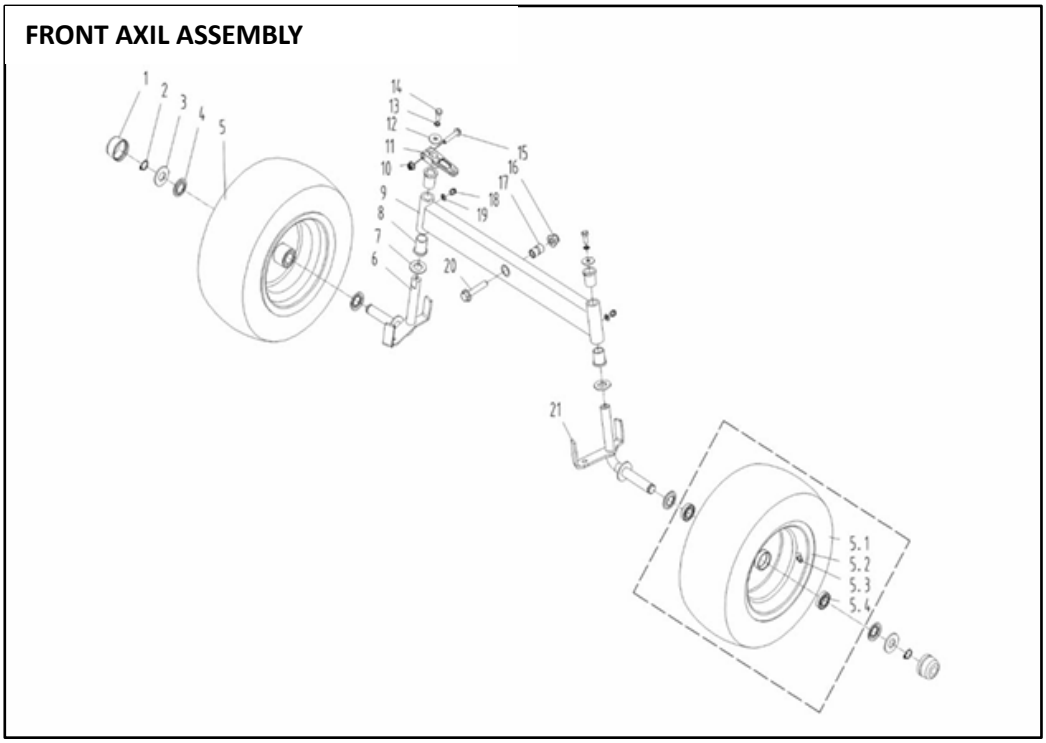

NO	PART NAME	QTY
1	HUB COVER	2
2	SNAP RING 19	2
3	WASHER ϕ20 x ϕ43 x 3	2
4	WASHER	4
5	FRONT WHEEL ASSEMBLY	2
5.1	FRONT WHEEL ASSEMBLY	1
5.2	FRONT WHEEL ASSEMBLY	2
5.3	GB / T3900-1997	1
5.4	BEARING 61904-2RZ	4
6	FRONT AXLE RH	1
7	WASHER 20	2
8	BUSHING	4
9	FRONT AXLE WELDMENT	1
10	FLANGE LOCK NUT M8	1
11	TURNING ARM	1
12	WASHER	2
13	SPRING WASHER 8	2
14	BOLT M8 x 20	2
15	FLANGE BOLT M8 x 45	1
16	FLANGE LOCK NUT M12 x 1.25	1
17	LINER TUBE	1
18	OIL INJECTION NOZZLE	2
19	WASHER6	2
20	FLANGE BOLT M12 x 1.25 x 55	1
21	FRONT AXLE LH	1

ENGINE ASSEMBLY

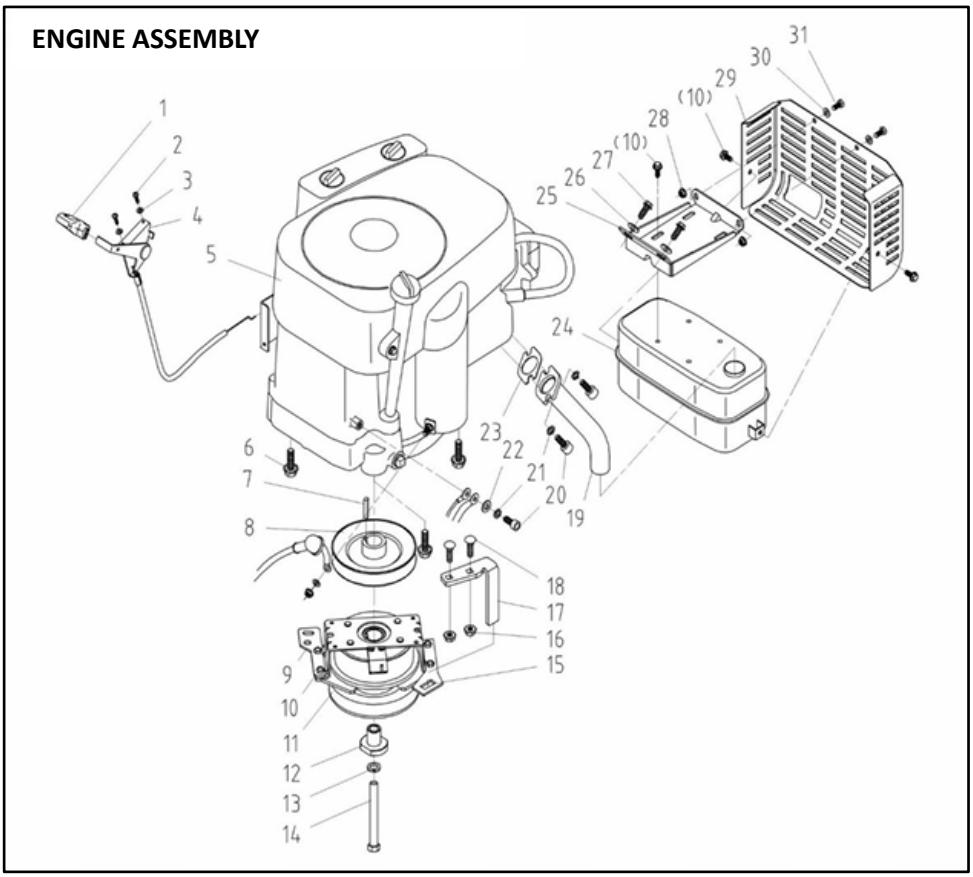

NO	PART NAME	QTY
1	CHOKE KNOB	1
2	SCREW M4 x 16	2
3	WASHER 4	2
4	THROTTLE CABLE	1
5	ENGINE	1
6	TAPPING SCREW 3/8"-16-1 1/4"	4
7	FLAT KEY 6.35 x 30	1
8	ENGINE PULLEY WELDMENT	1
9	SUPPORT	1
10	TAPPING SCREWM 6 x 16	10
11	ELECTRIC CLUTCH	1
12	CLUTCH STEP BUSHING	1
13	SPRING WASHER 7/16"	1
14	BOLT, 7/16"-20- 3”, UNF	1
15	CLUTCH CLAMP PLATE	1
16	FLANGE LOCK NUT M8	2
17	CLUTCH BAFFLE (SMALL BIN)	1
18	BOLT M8 X 20	2
19	EXHAUST PIPE	1
20	SCREW 5/16"-18 -3/4"	3
21	SPRING WASHER 5/16"	3
22	WASHER 8	1
23	GASKET	1
24	MUFFLE	1
25	BRACKET	1
26	BIG WASHER 8	2
27	FLANGE BOLT 5/16-18 TX 3/4	2
28	FLANGE LOCK NUT M6	2
29	FRONT SHIELD	1
30	BIG WASHER 6	2
31	BOLT M6 X 16	2

SEAT ASSEMBLY

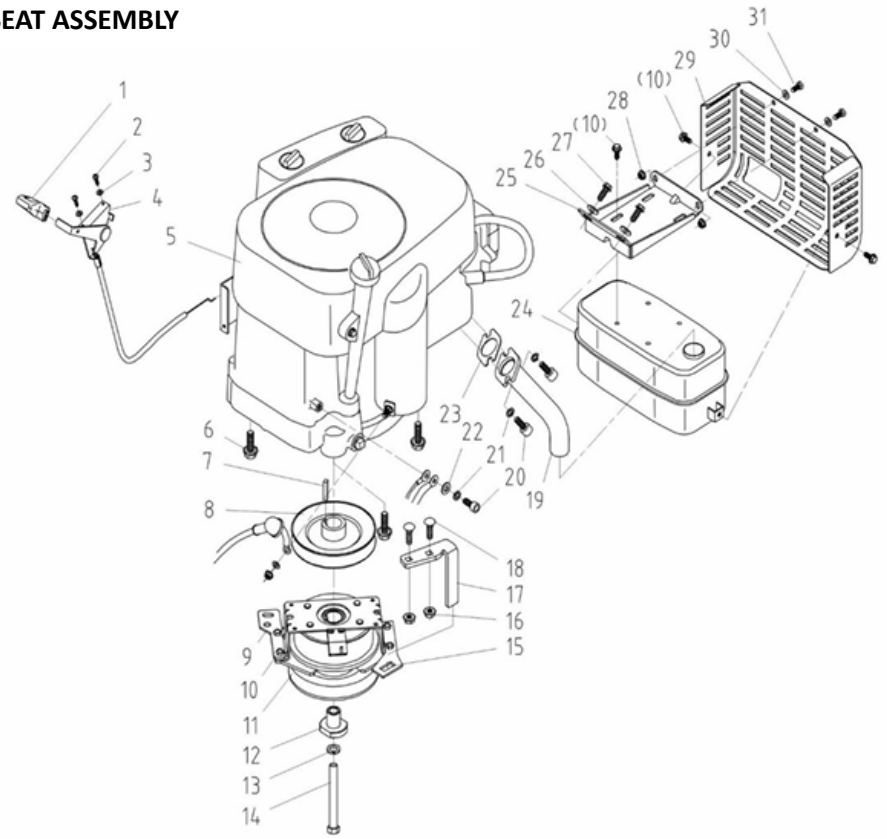

NO	PART NAME	QTY
1	FLANGE LOCK NUT M8	6
2	SEAT BACK BEAM	1
3	FLANGE BOLT M8 X 20	4
4	SEAT SPRING	2
5	BIG WASHER	6
6	FLANGE BOLT M8 X 25	4
7	SPRING CAP	2
8	AJUSTABLE SEAT BASE PLATE	1
9	SEAT SCREWS	2
10	SEAT CUSHION STRIP	2
11	SELF TAPPING SCREW M6 - 16	2
12	SEAT SWITCH COMPONENTS	1
13	SEAT ZJZY3-2	1
14	SPRING ϕ1.5 x ϕ16	1
15	SEAT ADJUSTMENT PLATE	1

STEERING WHEEL ASSEMBLY

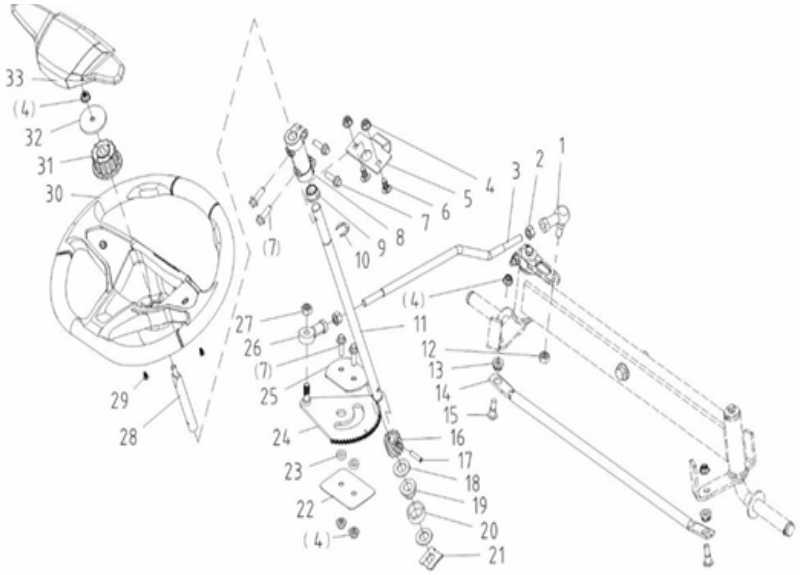

NO	PART NAME	QTY
1	JOINT BEARING M10	1
2	NUT M10	2
3	STEERING DRAG ROD	1
4	FLANGE LOCK NUT M8	7
5	SQUARE HOLE CARDBOARD	1
6	SCREW M8 X 20	6
7	FLANGE BOLT M8 X 25	6
8	COUPLINGS	1
9	HATCH BUSHING	1
10	SNAP RING 15	1
11	STEERING COLUMN	1
12	LOCK NUT M10	1
13	ELASTIC RUBBER BUSH	2
14	STEERING DRAG ROD	1
15	PIN SCREW M8 X 28	2
16	STEERING GEAR LEFT	1
17	PIN 6 X 26	1
18	WASHER 16	2
19	HEXAGON BUSHING	1
20	BUSHING	1
21	SNAP RING 16	1
22	TIE PLATE	1
23	BUSHING	2
24	STEERING GEAR PLATE WELDMENT	1
25	DOUBLE HOLE BOARD	1
26	JOINT BEARING SIJK 10C	1
27	LOCK NUT M10 x 1.25	1
28	STEERING WHEEL ROD A	1
29	SELF TAPPING SCREW ST4.8 x 16	2
30	STEERING WHEEL	1
31	SPLINED HUB	1
32	WASHER	1
33	STEERING WHEEL CAP	1

SUSPENSION

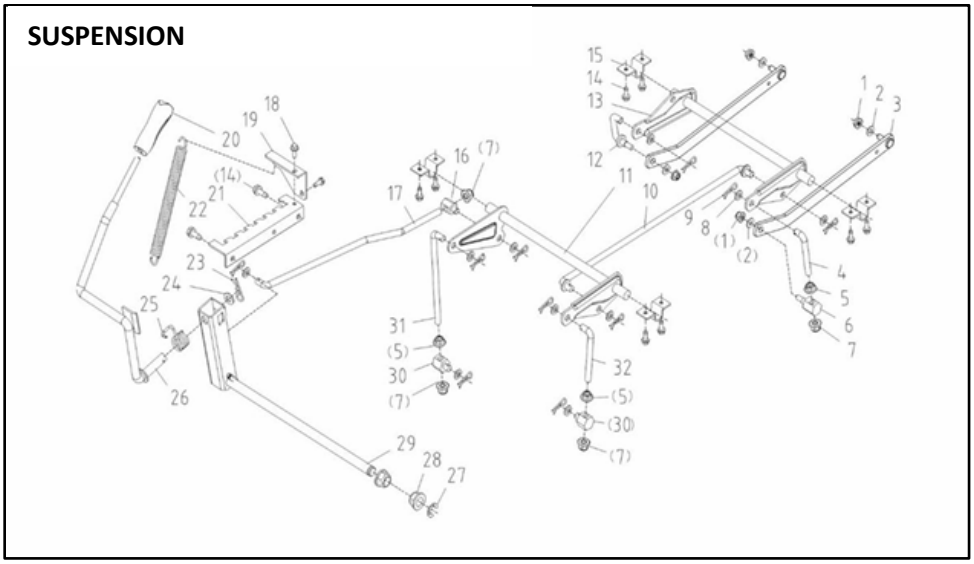

NO	PART NAME	QTY
1	FLANGE LOCK NUT M8	4
2	BIG WASHER	4
3	FRONT STAY BAR WELDMENT	2
4	FRONT RIGHT DERRICK	1
5	HEXAGON NUT 10 X 1.25	3
6	PIN	2
7	FLANGE LOCK NUT M10 X 1.25	4
8	WASHER 10	10
9	SPRING PIN	10
10	LIFTING LINK ROD WELDMENT (SIDE ROW)	1
11	REAR ARM WELDMENT (SIDE ROW)	1
12	U DERRICK WELDMENT	2
13	FRONT ARM WELDMENT	1
14	FLANGE BOLT 5/6 – 18T x 3/4	3
15	U-SHAPED CLAMP	1
16	ADJUSTING PIN	1
17	LIFTING PULL ROD (SIDE ROW)	1
18	TAPPING SCREW M 6 X 16	2
19	SPRING HANGING PLATE TTM86	1
20	HANDLE	1
21	RATCHET PLATE	1
22	LIFTING HELPING SPRING	1
23	COTTER PIN Φ3	2
24	WASHER 14 X 1.5	1
25	RIGHT SPRING	1
26	LEVEL WELDMENT	1
27	RETAINER RING 12	2
28	HEXAGON BUSHING	2
29	LEVEL WELDMENT	1
30	PIN JOINT TTM86S ELECTROPLATED	2
31	REAR LEFT ADJUSTING LEVER	1
32	REAR RIGHT ADJUSTING LEVER	1

MULCH COVER

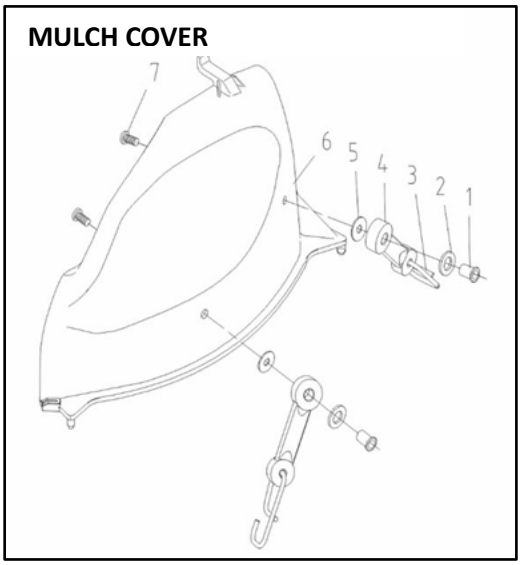

NO	PART NAME	QTY
1	NUT M6 X 13.5	2
2	WASHER 10	2
3	HOOK	2
4	BELT	2
5	WASHER 6	2
6	MULCH COVER	1
7	SCREW M6 X 16	2

HITCH BRACKET

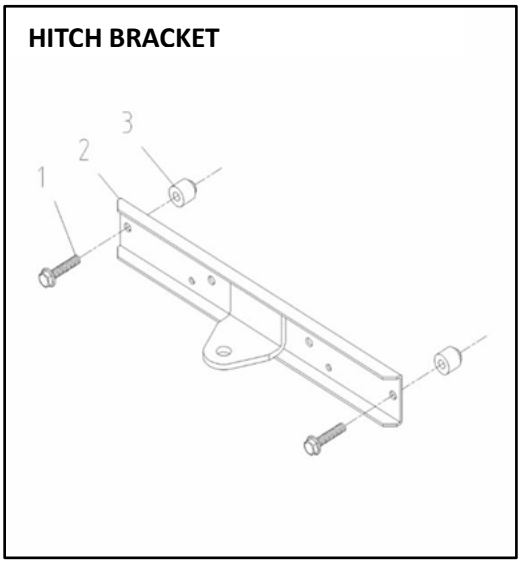

NO	PART NAME	QTY
1	FLANGE BOLT M8 X 40	2
2	HITCH BRACKET	1
3	PAD SLEEVE	2

BODY ASSEMBLY

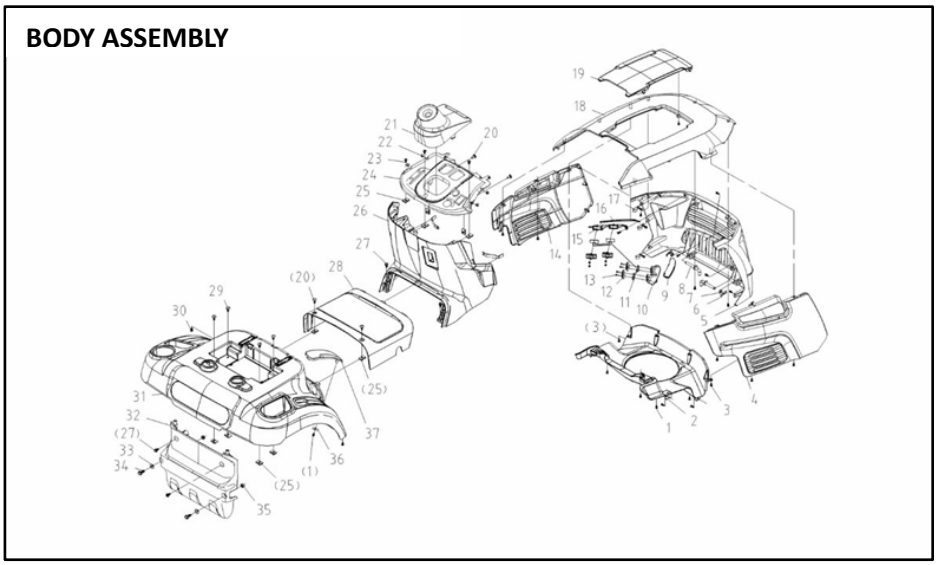

NO	PART NAME	QTY
1	SCREW ST4.8×16	28
2	AIR DIRECTOR	1
3	SCREW ST4.8×20	2
4	RIGHT SIDE COVER RAL2004	1
	RIGHT SIDE COVER RAL1021	1
	RIGHT SIDE COVER RAL6029	1
	RIGHT SIDE COVER RAL3002	1
5	FRONT COVER	1
6	SPRING PIN	2
7	WASHER 10	2
8	PIN	2
9	RIGHT LIGHT COVER	1
10	RIGHT LIGHT BASE TTM86	1
11	LIGHT	1
12	LAMP BASE COVER TTM86	4
13	TAPPING SCREW ST2.9X12	8
14	LEFT LIGHT BASE, TTM86	1
15	LEFT SIDE COVER RAL2004	1
	LEFT SIDE COVER RAL1021	1
	LEFT SIDE COVER RAL6029	1
	LEFT SIDE COVER RAL3002	1
16	LEFT LIGHT COVER	1
17	IGNITION WIRE CLAMP	5
18	ENGINE COVER RAL2004	1
	ENGINE COVER RAL1021	1
	ENGINE COVER RAL6029	1
	ENGINE COVER RAL3002	1
19	ENG COVER AIR INTAKE RAL2004	1
	ENG COVER AIR INTAKE RAL1021	1
	ENG COVER AIR INTAKE RAL6029	1
	ENG COVER AIR INTAKE RAL3002	1
20	SCREW M6×16	4
21	STEERING WHEEL COVER	1
22	HANDLE ANTI-VIBRATION RUBBER	6
23	SCREW M6×16	3
24	PANEL	1
25	BUCKLE NUT M6	11
26	SHIELD	1
27	SCREW M6×16	6
28	MAINTENANCE COVER RAL2004	1
	MAINTENANCE COVER RAL1021	1
	MAINTENANCE COVER RAL6029	1
	MAINTENANCE COVER RAL3002	1
29	SCREW M6×16	4
30	TAPPING SCREW ST4.8X16	2
31	SIDE DISCHARGE R SEAT RAL1021	1
	SIDE DISCHARGE R SEAT RAL6029	1
32	GEAR BOX COVER	1
33	TENTION ARM AXLE SLEEVE	2
34	FLANGE BOLT M8×20	2
35	FLANGE LOCK NUT M8	2
36	GASKET 6.5×25×1.4	1
37	STALL DECORATIVE PLATE	1

PRORUN LIMITED WARRANTY

Warranty Coverage:
PRORUN, a brand under Topsun USA Inc., warrants that its products are free from defects in material or workmanship under normal use and maintenance. The company will, at its discretion, repair or replace any defective product or part covered by this Limited Warranty, free of charge at any authorized Servicing Dealer/Center using OEM replacement parts, subject to the limitations and exclusions described below.

Limited Warranty Period:
PRORUN products are warranted to the original retail purchaser from the date of retail purchase for the applicable period of time specified in the product documentation or as listed below. Please note that certain products may have extended warranties as indicated.

What is NOT Covered:
This Limited Warranty does not cover:

- Replacement of normal wear parts, including but not limited to air filters, belts, blades (excluding normal wear for electric units), fuel filters, lubricants, spark plugs, seats, etc.
- Damage caused by improper use, neglect, modifications, improper servicing, or use of unauthorized
- attachments.
- Damage resulting from the use of improper fuel or failure to follow prescribed fuel and oil usage.
- Damage caused by external factors such as accidents or events beyond PRORUN's reasonable control.
- Damage due to improper setup, pre-delivery service, or repair service by unauthorized personnel.
- Damage to batteries, including failure due to discharge or improper voltage use, is not covered under this warranty. Please note that batteries can be susceptible to damage from improper storage, particularly in extreme low temperatures. It is recommended that users store batteries indoors during the winter or any period of extreme temperature to prevent potential damage.
- Damage due to exposure of products to temperatures outside product specifications.

Your Responsibilities:
To maintain your rights under this Limited Warranty, you must exercise reasonable care and use of the product as outlined in the operator's manual. Failure to perform required maintenance as described will void this warranty. Additionally, you must cease using the product immediately upon any failure or damage and take it to an authorized servicing dealer for inspection.

Limitation of Liability for Personal Injury:
PRORUN shall not be liable for any personal injury, including but not limited to bodily harm, illness, or death, arising from the use, misuse, or improper handling of its products. Users assume all risks associated with the use of PRORUN products and are responsible for ensuring safe operation and adherence to safety guidelines provided in the operator's manual. PRORUN shall not be held liable for any damages or injuries resulting from misuse, negligence, improper maintenance, alteration, or

unauthorized repair of its products. Users are advised to exercise caution and follow all safety precautions to prevent personal injury while using PRORUN products.

Warranty Exclusions, Disclaimers, and Limited Rights:
PRORUN shall not be liable for any incidental, consequential, special, or punitive damages or losses. Your remedy is limited to repair or replacement of the product or part, at PRORUN's discretion. The company's liability shall not exceed the actual amount paid for the defective product.
It should be noted that PRORUN is not liable for any personal injury due to misuse. Our manuals typically include safety requirements that users must adhere to.

How to Obtain Service:
To obtain warranty service, you must take your product to an authorized Servicing Dealer/Center. Proof of purchase is required, including date, product model, and serial number. Any costs associated with transporting the product are your responsibility.
For assistance in locating an authorized Servicing Dealer/Center or for inquiries, please visit https://www.proruntools.com or contact our customer service hotline at 1-844-905-0882.

Additional Information:
Registering your product is not a condition of warranty service; however, it may help ensure that you receive important product information.

Disclaimer:
This Limited Warranty gives you specific legal rights, and you may also have other rights based on your locality. Any warranty implied by state law is hereby disclaimed to the extent permitted by law. Some localities may not allow exclusions of incidental or consequential damages or limitations on how long an implied warranty lasts, so the above limitations may not apply to you.

Product Platform	Residential Warranty	Commercial Warranty
20V Handheld (Lithium-Ion)	3 Years (Tool & Battery)	Not Currently Available
60V Handheld (Lithium-Ion)	3 Years (Tool & Battery)	1 Years (Tool & Battery)
Gas Handheld	3 Years	1 Year
48V Wheeled (Lead-Acid)	3 Years (Tool & Battery)	Not Currently Available
60V Wheeled (Lithium-Ion)	3 Years (Tool & Battery)	Not Currently Available
Gas Wheeled	3 Years	Not Currently Available

Note:
This warranty page is subject to change without notice. Please refer to the latest product documentation or contact customer service for the most up-to-date warranty information.

PRORUN regularly improves our products, and you may find slight differences between your machine and the descriptions contained within this operator's manual. Modifications can be made to the machine without notice and without the obligation to update the manual, providing that the essential safety and functional characteristics remain unaltered. Contact PRORUN Customer Service with any questions and for current specifications.

PRORUN / SUNFUTURE INC.
200 Overhill Drive, Suite A
Mooresville, NC 28117
www.proruntech.com

Zhejiang Zhongjian Technology Co., Ltd
Web: www.topsunpower.cc
E-mail: sales@topsunpower.cc
ADD: No.155 Mingyuan North AVE, Economic Development Zone,
Yongkang, Zhejiang, 321300, P.R. CHINA
Made in China

PRORUN

LC1P91F ENGINE
PLT42LH1 546CC LAWN TRACTOR
OWNER'S MANUAL



READ ALL INSTRUCTIONS BEFORE FIRST USE.
KEEP THIS MANUAL FOR FUTURE REFERENCE.
KEEP OUT OF REACH OF CHILDREN



WEAR CSA APPROVED EYE PROTECTION



WEAR EAR PROTECTION



WEAR FACE PROTECTION

MODEL LC1P91F ENGINE OWNER'S MANUAL

TABLE OF CONTENTS

1. General information
2. Safety regulations
3. Components and controls
4. What you need to know
5. Standards of use
6. Maintenance
7. Troubleshooting
8. Technical data

1. GENERAL INFORMATION

1.1 READING AND UNDERSTANDING THE MANUAL

Some paragraphs in the manual containing information of particular importance for safety and operation are highlighted at various levels of emphasis, and signify
the following:

NOTE or ⚠WARNING!

These give details or further information on what has already been said and aim to prevent damage either to the engine or other damage.

⚠WARNING! Non-observance will result in the risk of injury to oneself or others.

⚠DANGER! Non-observance will result in the risk of serious injury or death to oneself or others.

NOTE All indications, "front", "rear", "right" and "left", are to be taken as referring to the engine positioned with the spark plug facing forwards with respect to the observer.

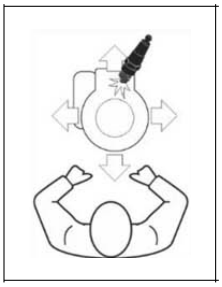

The number before the paragraph title refers to the text references and their related figures (shown inside front and back covers).

1.2 SAFETY SYMBOLS

Your engine should be used with due care and attention. Symbols have therefore been placed on the engine to remind you of the main precautions to be taken. Their full meaning is explained later.

You are also asked to carefully read the safety regulations in the applicable chapter of this handbook.



WARNING! - Read and follow Operating Instructions before running the engine.



WARNING! - Gasoline is flammable. Allow the engine to cool at least 2 minutes before refueling.



WARNING! Engines emit carbon monoxide. DO NOT run in enclosed areas.

3. GENERAL SAFETY STANDARDS (to be strictly applied)

A. TRAINING

1) Carefully read the instructions contained in this manual and the instructions of the machine on which this engine is installed. Learn how to stop the engine quickly.
2) Never allow people unfamiliar with these instructions to use the engine.
3) Never use the engine while people, especially children or pets are nearby.
4) Remember that the operator or user is responsible for accidents or hazards occurring to other people or their property.

B. PREPARATION

1. Do not wear loose-fitting clothing, dangling drawstrings, jewels, or items that could become caught; tie up long hair and keep at safe distance while starting the lawnmower.
2. Turn the engine OFF and let it cool before removing the gas cap.

3) **⚠WARNING! ⚠ DANGER! Fuel is highly flammable:**

- Store the fuel in special containers.
- Refuel only outdoors by using a funnel; never smoke while refueling and/or handling fuel.
- Add fuel before starting the engine. Never remove the cap of the fuel tank or add fuel while the engine is running or when the engine is hot.
- If you have spilt some fuel, do not attempt to start the engine but move the machine away from the area of spillage and avoid creating any source of ignition until the fuel has evaporated and fuel vapors have dissipated.
- Always put the tank and fuel container caps back on and tighten well.

4) Replace faulty silencers and the guard, if damaged.

C. OPERATION

1) Do not operate the engine in a confined space where dangerous carbon monoxide fumes can collect.
2) Do not use starting fluids or similar products.
3) Do not change the engine governor settings or overspeed the engine.
4) Do not tilt the machine onto its side to prevent fuel leaks from the fuel tank cap.
5) Do not touch the cylinder fins and/or the silencer guard until the engine has cooled down.
6) Stop the engine and disconnect the spark plug cable before checking, cleaning or servicing the machine or the engine.
7) Do not crank the engine with the spark plug removed.
8) Transport the machine with empty tank.

D. MAINTENANCE AND STORAGE

1) Routine maintenance is essential for safety and for keeping a high-performance level.
2) Do not store the machine with fuel in the tank in an area where the fuel vapors could reach an open flame, a spark or a strong heat source.
3) Allow the engine to cool before storing it in any enclosure.
4) To reduce the fire hazard, keep the engine, the silencer, and the fuel storage area free of grass, leaves, or excessive grease.
5) If the fuel tank must be drained, this should be done outdoors once the engine has cooled down.

6) For safe operation, never use the engine with either worn or damaged parts. Parts should be replaced and not repaired. Use genuine spare parts. Parts that are not of the same quality can damage the engine and impair your safety.

3. COMPONENTS AND CONTROLS

3.1 ENGINE COMPONENTS

1) Oil filler cap with dipstick
2) Oil drain plug
3) Air cleaner cover
4) Fuel shut off valve
5) Spark plug cap
6) Engine code

Note your engine serial number here: _

3.2 ACCELERATOR CONTROL

The throttle trigger (generally a lever), fitted to the machine, is connected to the engine by a cable.
Consult the machine's Instructions Manual to identify the throttle trigger and its positions, usually marked by symbols, corresponding to:

CHOKE = to be used for starting from cold.

FAST = corresponds to maximum revs; to be used when working.

SLOW = corresponds to minimum revs.

4. WHAT YOU NEED TO KNOW

Engine performance, reliability and life are influenced by many factors, some external and some strictly associated with the quality of the products used and with the scheduled maintenance. The following information allows a better understanding and use of your engine.

4.1 ENVIRONMENTAL CONDITIONS

The operation of a four-stroke endothermic engine is affected by:

i. Temperature:

- Working in low temperatures could lead to a difficult cold start.
- Working in very high temperatures could lead to a difficult hot start due to the evaporation of the fuel either in the carburetor float chamber or in the pump.
- In any case, the right kind of oil must be used, according to the operating temperatures.

ii. Altitude:

- The higher the altitude (above sea level), the lower the max power developed by an endothermic engine.
- When there is a considerable increase in altitude, the load on the machine should be reduced and particularly heavy work avoided.

4.2 FUEL

Good quality fuel is important for reliable engine operation.

a. Use unleaded gasoline, with a minimum of 90 octane.
b. Use clean, fresh fuel; purchase fuel in quantity that can be used within 30 days, to prevent
c. gum forming inside the container or the tank.
d. Do not use fuel which contains Methanol.
e. Do not add either oil or any kind of fuel additive.

4.3 0IL

Use always high-quality oils, choosing their viscosity grade according to the operating temperature.

a. Use only detergent oil classified SF-SG.

b. Choose the SAE viscosity grade of oil from this chart:
- from 5 to 35 °C = SAE 30
- from -15 to+ 5 °C = 5W-30 or l0W-30 (multi-viscosity)
- from -25 to+ 35 °C = Synthetic oils 5W-30 or lOW-30 (multi-viscosity)

c. The use of multi-viscosity oils in hot temperatures will result in higher-than- normal oil consumption; therefore, check oil level more frequently.
d. Do not mix oils of different brands and features.
e. SAE 30 oil, if used below 5°C, could result in possible engine damage due to inadequate lubrication.
f. Oil should be at "MAX" mark do not overfill.
- Overfilling with oil may cause Smoking, spark plug, or air filter fouling, which will cause hard starting.

4.4 AIR FILTER

The air filter must always be in perfect working order, to prevent debris and dust from getting sucked into the engine, reducing the efficiency and life of the machine.

a. Always keep the filtering element free of debris and in perfect working order.
b. If necessary, replace the filtering element with an original spare part. Incompatible filtering elements can impair the efficiency and life of the engine.
c. Never start the engine without mounting the filtering element properly.

4.5 SPARK PLUG

Not all the spark plugs for endothermic engines are the same!

a. Use only spark plugs of the recommended type, with the right heat range.
b. Check the length of the thread, because - if it is too long - it will damage the engine beyond repair.
c. Make sure that the electrodes are clean, and their gap is correct.

5. STANDARDS OF USE

5.1 BEFORE EVERY USE

Before every use, perform the following checking procedures in order to ensure regular operation.

5.1.1 Check oil level

See the specific chapter (8.1) for the oil to be used.

a. Place engine level.
b. Clean around oil fill.
c. Unscrew the cap, clean the end of the dipstick, and insert it, as illustrated, without screwing it down.
d. Remove the cap with the dipstick and check the oil level that must be between the "MIN" and "MAX" marks.
e. If oil is required, add oil of the same kind up to the "MAX" mark, being careful not to spill any outside the oil fill.

5.1.2 Check air cleaner

The efficiency of the air filter is fundamental to the engine to work properly. Do not start the engine if the filtering element is missing or broken.

a) Clean around the filter cover.
b) Remove the cover by unscrewing the two knobs.
c) Check the condition of the filtering element. It must be intact, clean and in perfect working order; if not, either carry out maintenance or replace it.
d) Put the cover back.

5.1.3 Adding fuel

⚠ **IMPORTANT!** Do not drip petrol onto the plastic parts of the motor or the machine to prevent damaging them and remove all traces of spilt petrol immediately. The warranty does not cover damage to plastic parts caused by petrol.

See "Technical Data" chapter (8.1) for the fuel characteristics.
Refueling must be made when the engine is cold, following the instructions contained in the machine's 'Instructions Manual.

5.1.4 Spark plug cap

Firmly connect the cable cap to the spark plug, making sure that there are no traces of dirt inside the cap and on the spark plug terminal.

5.2 STARTING THE ENGINE (cold)

The engine must be started in the way described in the machine's Instruction Manual, always making sure that any device (if present) that could cause the machine to advance or the engine to stop is disengaged.

a. Open the fuel shut off valve.
b. Move the throttle to "CHOKE".
c. Turn the starter key as described in the machine's instruction manual.

After a few seconds, slowly move the throttle from "CHOKE" to either "FAST" or "SLOW".

NOTE If the engine starts but does not keep running, repeat the above steps with the throttle on "FAST".

5.3 STARTING THE ENGINE (hot starting)

- Follow the whole cold-starting procedure with throttle control in "FAST" position.

5.4 USE OF THE ENGINE IN OPERATION

Maximum revs must be used to optimize the engine's yield and performance, by setting the throttle trigger to "FAST".

⚠ **WARNING!** Keep your hands away from the silencer and surrounding areas that can become extremely hot. With the engine running, do not get loose-fitting clothing (ties, scarves, etc.) or hair closer to the top part of the engine.

⚠ **IMPORTANT!** Do not operate on over 20° inclines to prevent malfunctioning of the engine.

5.5 STOPPING THE ENGINE DURING MOWING

a. Move the throttle to "SLOW".
b. Allow the engine to run at minimum speed for at least 15-20 seconds.
c. Stop the engine following the instructions contained in the machine's Instructions Manual.

5.5 STOPPING THE ENGINE AFTER MOWING

a. Move the throttle to "SLOW".
b. Allow the engine to run at minimum speed for at least 15-20 seconds.
c. Stop the engine following the instructions contained in the machine's Instructions Manual.
d. When the engine is cold, disconnect the spark plug and remove the starter key (if present).
e. Close the fuel shut off valve.
f. Remove any debris from the engine and especially around the exhaust silencer to reduce the risk of fire.

5.7CLEANING AND STORAGE

a) Do not spray water or use hydraulic lances to clean the exterior of the engine.
b) Use a compressed air gun (max. 6 bars) for preference, thus preventing debris and dust from penetrating inside.
c) Store the lawnmower (and the engine) in a dry place, sheltered from severe weather conditions and sufficiently ventilated.

5.8 LONG STORAGE (over 30 days)

In case the engine has to be stored for a long time (for example at the end of the season), a few precautions are needed to help the future start-up.

a. To prevent the formation of deposits inside the tank, empty it of fuel by unscrewing the carburetor float chamber plug and collecting all the fuel in a suitable container. At the end of the operation remember to screw the plug back on and fully tighten it.
b. Remove the spark plug and pour about 3 cl of clean engine oil into the spark plug hole, then, having blocked the hole with a rag, run the starter motor briefly to turn the engine for a few revs and distribute the oil over the inner surface of the cylinder. Finally replace the spark plug without connecting the cable cap.

6. MAINTENANCE

6.1 SAFETY RECOMMENDATIONS

⚠WARNING! Remove the spark plug cap and read instructions before carrying out any cleaning, repair or maintenance operation. Wear proper clothing and gloves whenever your hands are at risk. Do not perform maintenance or repair operations without the necessary tools and technical knowledge.

⚠IMPORTANT! Never get rid of used oil, fuel or other pollutants in unauthorized places.

6.2 MAINTENANCE SCHEDULE

Follow the hourly or calendar - whichever occurs first - maintenance schedule shown in the following table.

Operation	After First 5 hours	Every 5 hours or daily	Every 50 hours or every season	Every 100 hours
Check oil level		**X**		
Change oil [1)]	**X**			**X**
Clean silencer and engine		**X**		
Air filter cleaning [2)] **and check**		**X**		
Air filter replacement 2l			**X**	
Check spark plug			**X**	
Replace spark plug				**X**
Fuel filter check [3)]				**X**

1) Change the oil every 25 hours if the engine is operating under heavy load or in hot weather.
2) Clean air cleaner more frequently if the machine is operating in dusty areas.
3) To be carried out by a specialized Centre.

6.3 CHANGE OIL

See the specific chapter (8.1) for the oil to be used.

⚠WARNING! Drain oil while the engine is warm, being careful not to touch the hot engine nor the drained oil.

a. Place the machine on a flat surface.
b. Clean the area around the filler cap and unscrew the cap with dipstick.
c. Provide a suitable container for collecting the oil and unscrew the drain plug.
d. Refit the drain plug and fully tighten it having made sure that the gasket is in the right position.
e. Fill up with fresh oil.
f. Check that the oil level has reached the "MAX" notch on the dipstick.
g. Close the cap again and clean up any traces of oil that was possibly spilt.

NOTE The oil capacity is about 1.2 Liters

⚠WARNING!

- The length of time that gasoline can be left in your fuel tank and carburetor without causing functional problems will vary with such factors as gasoline blend, your storage temperatures, and whether the fuel tank is partially or completely filled. The air in a partially filled fuel tank promotes fuel deterioration. Very warm storage temperatures accelerate fuel deterioration. Gasoline will oxidize and deteriorate in storage. Deteriorated gasoline will cause hard starting, and it leaves gum deposits that clog the fuel system. As a result, If the engine is not used for more than one month, the fuel oil shall be drained thoroughly to prevent deterioration of the fuel in the fuel system and carburetor.
- The failures of the fuel system or engine performance arising from improper storage are beyond the scope of the warranty.

6.4 CLEAN SILENCER AND ENGINE

The silencer must be cleaned when the engine is cold.

a. Use a jet of compressed air to remove any debris and dirt that could cause a fire from the silencer and its protective cover.

c. Make sure that the cooling air intakes are not blocked.
d. Clean the plastic components with a sponge soaked in water and detergent.

6.5 AIR FILTER MAINTENANCE

a. Clean the area around the filter cover.
b. Remove the cover by unscrewing the two knobs.
c. Remove the filtering element.
d. Tap the cartridge on a solid surface and blow it from the inside with compressed air to remove dust and debris.

⚠IMPORTANT! Do not use water, petrol, detergent or any other products to clean the cartridge.

⚠IMPORTANT! The sponge pre-filter must NEVER be oiled.

d) Clean the inside of the housing from dust and debris, making sure to block the inlet duct with a rag to prevent them from entering the engine,
e) Remove the rag, install the filtering element in its housing and refit the cover.

6.6 SPARK PLUG SERVICE

a. Remove the spark plug using a spark socket wrench.
b. Clean the electrodes with a metal brush and remove any carbonaceous build-up.
c. Using a thickness gauge, check for the right gap (0.6 - 0.8 mm) between the electrodes.
d. Install the spark plug and tighten with a socket wrench.

Replace the spark plug if the electrodes are burnt or if the porcelain is broken or damaged.
⚠WARNING! Fire hazard! Do not check the ignition system with spark removed.

⚠IMPORTANT! Use only spark plugs of the recommended type.

6.7 TUNING THE THROTTLE CABLE AND THE CARBURETTOR

Should the engine not reach maximum revs with the throttle trigger set to "FAST", it could be due to the throttle trigger and speed control lever being out of phase or to a carburetion problem.
Go to a specialized Center or contact your Dealer to restore normal operation.

6.8 CARBURETOR MODIFICATION FOR HIGH ALTITUDE OPERATION

At high altitudes, the standard carburetor air-fuel mixture will be too rich. Performance will decrease, and fuel consumption will increase. A very rich mixture will also foul the spark plug and cause a hard starting. Operation at an altitude that differs from that at which this engine was certified, for extended periods of time, may increase emissions.

High altitude performance can be improved by specific modifications to the carburetor. If you always operate your engine at altitudes above 5,000 feet (1,500 meters), have your servicing dealer perform these carburetor modifications. This engine, when operated at a high altitude with the carburetor modifications for high altitude use, will meet each emission standard throughout its useful life.

7. TOUBLESHOOTING

PROBLEM	LIKELY CAUSE	SOLUTION
a. Hard starting	• No fuel • Stale fuel or build-ups in tank • Incorrect starting procedure • Spark plug disconnected • The spark plug is wet, or the spark plug electrodes are dirty or placed inadequately • Air filter clogged • Incorrect oil for the season • Fuel evaporation in the carburetor (vapor lock) due to high temperatures • Fault in carburation • Hard starting	• Check and top up • Empty fuel tank and refill with fresh fuel • Perform the starting procedure correctly • Check that the spark plug cap fits well over the plug terminals • Check • Check and clean • Replace with proper oil • Wait for a few minutes then start again • Contact a Licensed Service Centre • Contact a Licensed Service Centre
b. Inconsistent working	• Dirty electrodes or incorrect gap • The spark plug cap is inserted incorrectly • Air filter clogged • Throttle trigger in "CHOKE" position • Fault in carburation • Fault in ignition	• Check • Check that the cap is fitted correctly • Check and clean • Move the lever to the "FAST" position • Contact a Licensed Service Centre • Contact a Licensed Service Centre
c. Loss of power whilst operating	• Air filter clogged • Fault in carburation • Governor out of phase with respect to the accelerator	• Check and clean • Contact a Licensed Service Centre • Adjust the cable

TECHNICAL SPECIFICATIONS

Fuel	Unleaded gasoline, minimum 90 octane	
Engine oil	From 5 to 35 °C	SAE 30
Engine oil	From -15 to +5 °C	5W-30 or 10W-30
Engine oil	From -25 to +35 °C	Synthetic 5W-30 or 10W-30
Oil capacity	1.6 liter	
Spark plug	F7RTC or equivalent	
Spark plug gap	0.6- 0.8 mm	