PERLICK®

INSTALLATION MANUAL
FOR BEVERAGE DISPENSING EQUIPMENT



Form No. Z3025
Rev. 10.01.25

CONGRATULATIONS

Congratulations on your purchase of a Perlick high quality residential Beverage Dispenser. Perlick has proudly manufactured Beverage Dispensing systems for over 50 years for bars, restaurants, stadiums, arenas and large venues around the world. That same technology is used in each and every residential Beverage Dispenser we produce, assuring you'll pour fresh, cold beer as the brewery intended it to be enjoyed.

All Perlick products are built with commercial grade stainless steel, providing you with the beauty and durability for a lifetime of use. This installation guide will show you how to properly install the dispensing equipment on your Perlick Beverage Dispenser.

We dedicate considerable time to ensure that our products provide the highest level of customer satisfaction. If, however, service is required, call Perlick at 800.558.5592. For your own protection, never return merchandise for credit without our approval.

We thank you again for selecting a high quality Perlick Beverage Dispenser. Cheers!

IMPORTANT!

Make sure the hole in the countertop and the hole in unit are inline to ensure proper installation of the pvc sleeve.

PLEASE NOTE

The following instructions are for both the Draft Arm and the Adara Tower.
Some photos and drawings may only show the Draft Arm, but the instructions will also apply to the Adara Beer Tower unless noted.

⚠ DANGER **Keep CO2 cylinder away from heat. Rupture disc vents at 122°F maximum.**

⚠ DANGER **Do not drop or throw regulator or CO2 cylinder.**

⚠ CAUTION **Allow only properly trained and experienced personnel to handle high pressure gas.**

⚠ CAUTION **Do not apply oil to the regulator!**

WARNING: California Prop 65 Notice
These products may expose you to chemicals including Chromium, which are known to the state of California to cause cancer and birth defects or other reproductive harm. For more information on whether a product in this list contains these chemicals, please refer to the specific product page at perlick.com. Or to find out more about **Prop 65**, go to **P65Warnings.ca.gov**.

BEVERAGE DISPENSING COMPONENTS LIST

Description	66585-1	66585-2	69862-1	69862-2	Unit Of Measure
Draft Arm – Single Faucet	1	–	–	–	EA
Draft Arm – Dual Faucet	–	1	–	–	EA
Adara Tower – Single Faucet	–	–	1	–	EA
Adara Tower – Double Faucet	–	–	–	1	EA
Beer Line	6.5	13	6.5	13	FT
CO2 Line	4.2	13.8	4.2	13.8	FT
CO2 Regulator	1	1	1	1	EA
Misc. Hardware	1	1	1	1	EA
Faucet Handle	1	2	1	2	EA
Low Profile Keg Coupler	1	2	1	2	EA
Air Snorkel Tube	1.3	1.3	1.3	1.3	FT
CO2 Cylinder – 5LB	1	1	1	1	EA
Surface Mount Drainer	1	1	1	1	EA
Drainer Insert	1	1	1	1	EA
Insulation Sleeve	1	1	1	1	EA
Beer Faucet	1	2	1	2	EA
2-Way Air Distributor	–	1	–	1	EA
Air Sleeve	1	1	1	1	EA

INSTALLATION OF DISPENSING EQUIPMENT

Open the beverage dispensing kit box and become familiar with its components. The instructions on pages 8 through 12 will demonstrate how to properly install the beverage dispensing equipment on your new Perlick Beverage Dispenser.

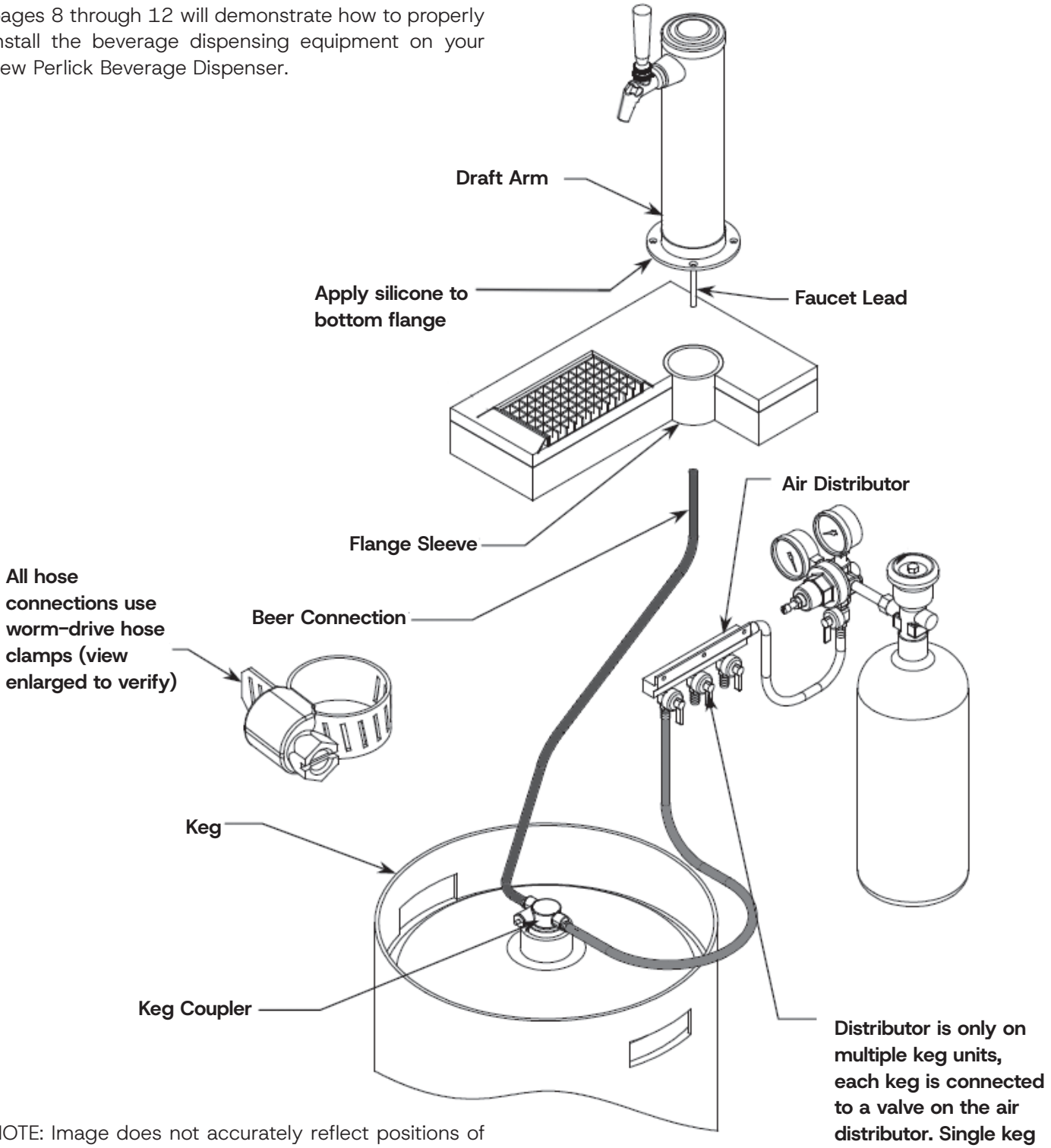

NOTE: Image does not accurately reflect positions of the different elements within the unit. Positions and hose lengths shown are to clearly illustrate proper connection methods only.

INSTALLATION OF DISPENSING EQUIPMENT

Open the beverage dispensing kit box and become familiar with its components. If the dispensing head is going to be mounted on a counter top directly above the refrigerated cabinet, have the counter top pre-drilled using the supplied template on page 13. **NOTE:** Make sure the access holes in the refrigerated cabinet is in line with the counter top holes so the PVC sleeve can be installed all the way through the fridge cabinet. Remove any obstructions from the access hole of the refrigerator.

Follow instructions on pages 8 through 12 to properly install the beverage dispensing equipment on your perlick unit.

NOTE: Wash beverage dispensing devices thoroughly. Flush beverage and faucet lines, as well as the beverage dispensing device (keg coupler) with fresh water.

IF YOU ARE INSTALLING A DRAFT ARM – SKIP TO PAGE 8. THE FOLLOWING INSTRUCTIONS ARE ADDITIONAL PREPARATION STEPS FOR THE ADARA DISPENSING HEAD ONLY

1. Mark the air tube for correct length dependent upon your installation scenario. If installing directly on top of the refrigerated cabinet, make a mark 5 inches from the bottom of the tower (Figure 1). If installing directly on top of a countertop, add the depth of the countertop to the original 5 inches and mark at that new dimension (Figure 2).

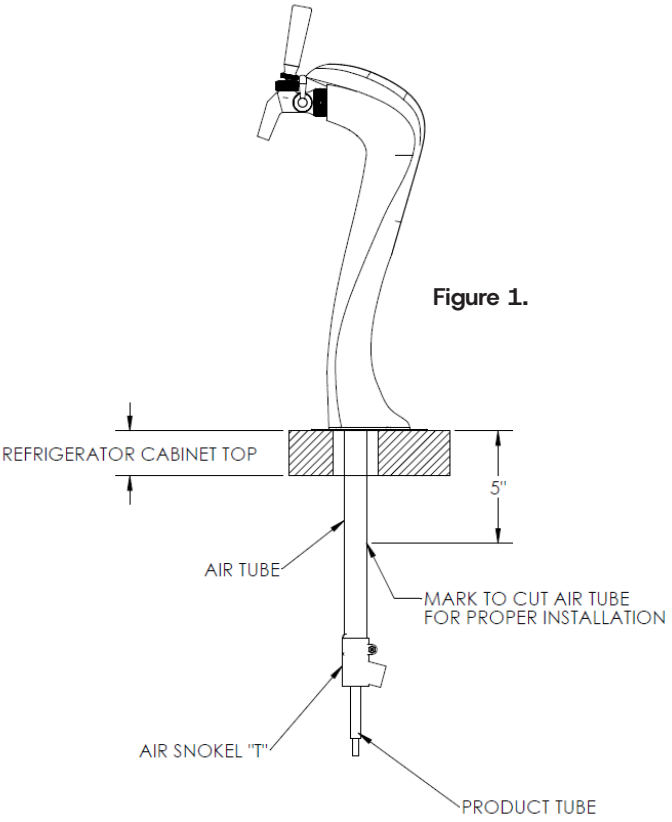

Figure 1.

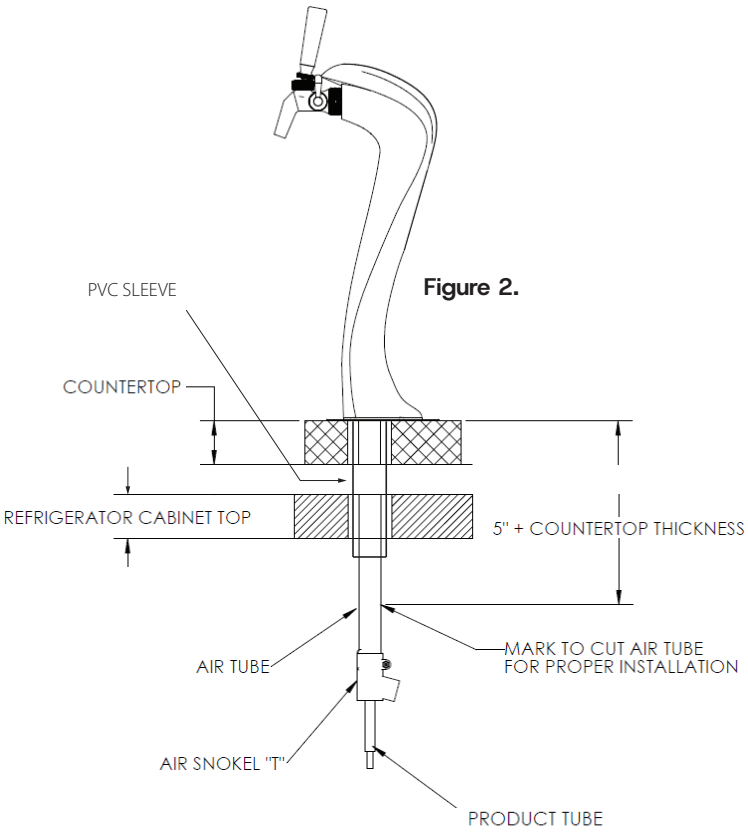

Figure 2.

Figure 3.

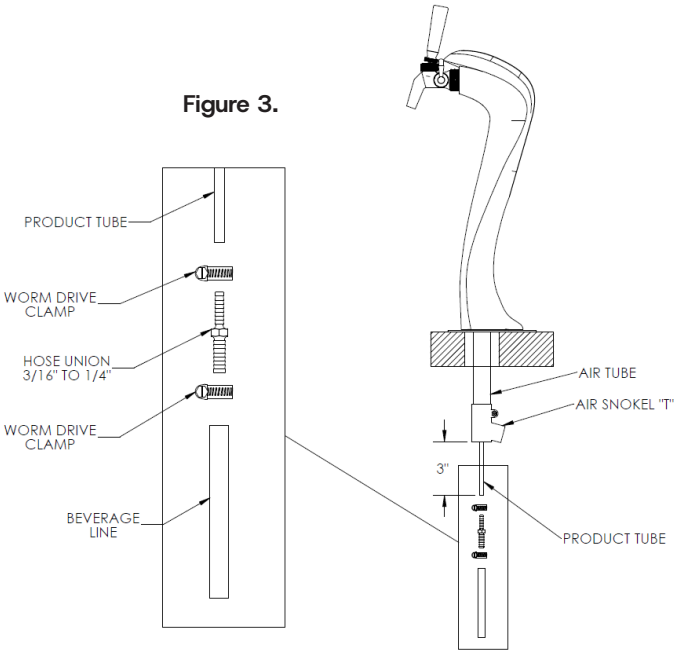

Figure 4.

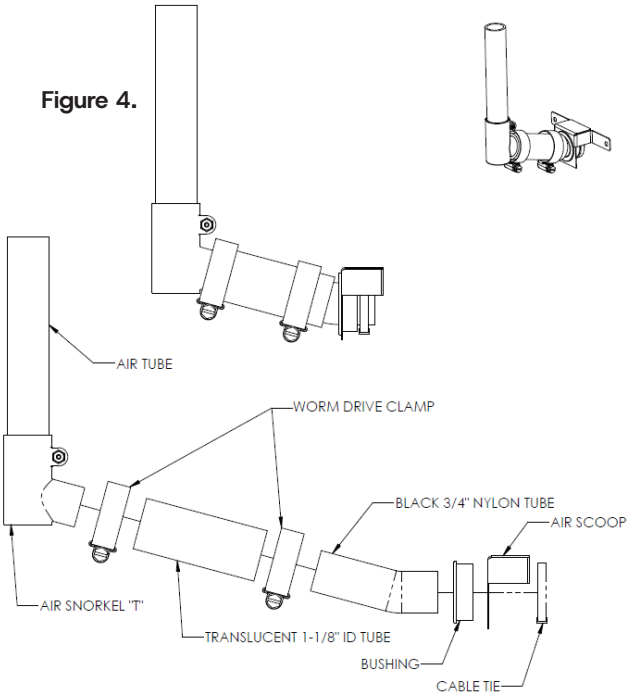

2. Remove air "T" from end of air tube by loosening fastener holding the two halves together. Remove the air tube from the tower being careful not to damage the product tube.

3. Cut air tube at mark made in step 1. Re-install air tube into tower and re-install "T" on the end of the air tube so "T" faces the rear of the tower.

4. Cut product tube 3 inches below the "T" and install included barbed union into product tube and clamp using worm drive clamp.

1.

Locate the dispensing head , black beverage line(s), and hose clamp(s). Slide one end of each beer line onto the stainless steel tubes which protrude out the bottom of the dispensing head and clamp tight.



2.

Remove transit tape with a utility knife around the hole in the top of the unit from both inside and outside of the cabinet. Gently punch out foam w/screwdriver and remove.



3.

For countertop installations only – The PVC sleeve is used to create an airtight seal between the countertop and inside of the refrigerator cabinet. Feed the PVC sleeve from the top and hold it approx. 1/8" higher than the countertop. From the inside, mark the sleeve at the roof of the cabinet. Cut the PVC Sleeve to length.





4.

For Countertop installations only – Using the provided Silicone, seal the upper edge of the PVC sleeve to the countertop and the lower edge of the PVC sleeve to the top of the refrigerator cabinet.



5.

Assemble components from the kit as follows – Insert black snap bushing into air scoop mounting bracket, then insert one end of the air snorkel through the snap bushing. A zip tie can be inserted behind the mounting bracket to keep the tube in place.

NOTE: For Adara Towers, the air snorkel consists of a 3 inch piece of black tubing and a 3 inch piece of clear tubing that slides over each other and then is clamped using included worm drive clamp. The black tube is inserted per the above instructions and secured with the included zip tie. The clear tube is installed over the air "T" from the dispensing head and secured with the included worm drive clamp. See Figure 4 on page 7 for illustration.



6.

Insert end of the snorkel up into the tower and screw air scoop mounting bracket into holes above the fan.



7.

Pick up tower and insert the beer line(s) through the hole in the counter top. Move head aside and bead silicone around perimeter of hole, and then position the head back in place. Fasten using the 4 chrome screws included with the dispensing head. Wipe off excess silicone to complete the seal. Be careful not to dislodge the PVC Sleeve.



8.

If installing a two faucet system, a CO2 manifold will need to be installed. Locate the red CO2 lines, CO2 manifold and a #10 × 1/2″ sheet metal screw. Slide one end of each hose onto the barbed fittings on the manifold and clamp. On the left rear side wall of the beer compartment there is a double row of screws which run vertically. Remove one of the two top screws and discard. Insert the sheet metal screw through the manifold and into the hole vacated previously.



9.

On a single beer system, locate the red CO2 hose. Slide one end onto the barbed fitting of the regulator assembly and clamp. On systems with two beers, locate the CO2 line that comes off the backside of the manifold assembly. Slide the hose onto the barbed fitting of the regulator assembly and clamp. For detailed information on connecting the regulator to the CO2 cylinder, see page 12.



10.

Locate the low profile keg coupler(s). Slide one of the red CO2 lines onto the larger barbed fitting of coupler and clamp. Locate one of the black beer lines and slide onto the smaller barbed fitting of the coupler and clamp. Repeat for additional couplers.

Note: This unit comes standard with Perlick's new 304SS Lo-Boy coupler (40030SSLD)

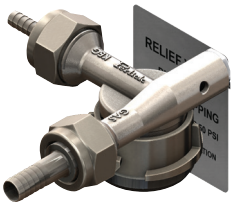



11.

A Safety chain is provided to prevent CO2 tank tip over. On the right rear sideway there is a pre-drilled hole for the safety chain screw. Locate the safety chain and a #10 × 1/2" sheet metal screw from the parts bag. Insert the screw through the closed end link of the chain and tighten in the vacant screw hole. The chain can now be used to secure the tank with "S" hook, preventing damage to the regulator.



12.

CO2 tanks are shipped empty and must be filled prior to use. Turn the adjusting knob on the regulator counter-clockwise until the secondary gauge (top) reads zero. Make sure that the valve at the bottom of the regulator where the red hose is connected is in the off position as shown. Watching the secondary pressure gauge, turn the regulator adjusting knob clockwise until the pressure is at 15 psig. Adjustments can later be made based on flow rates. IMPORTANT: All pressure adjustments MUST be made when the shut-off valve is in the OFF position!

NOTE: To refill C02 tanks, search online or contact your dealer for nearest location.

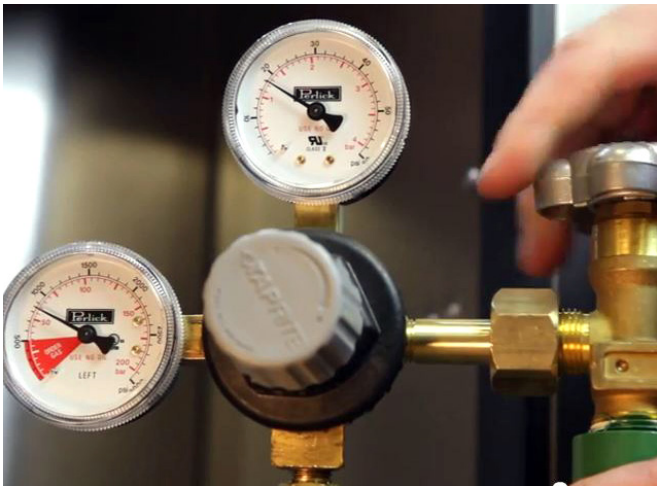

13.

Locate the beer faucet(s) and install onto the dispensing head shanks. Tighten with supplied spanner wrench. Install black handle(s) onto faucet(s).



14.

Before beverage dispensing, make sure the beer faucet is closed. To tap a keg, insert the coupler into the neck of the barrel. Turn the coupler clockwise until it stops (about an 1/8 turn), then push down on the top of the coupler and again turn clockwise until it stops. Your barrel is now tapped. Open the CO2 valve on the regulator as well as the valve on the manifold if used.



CONNECTING THE REGULATOR TO THE CO2 CYLINDER

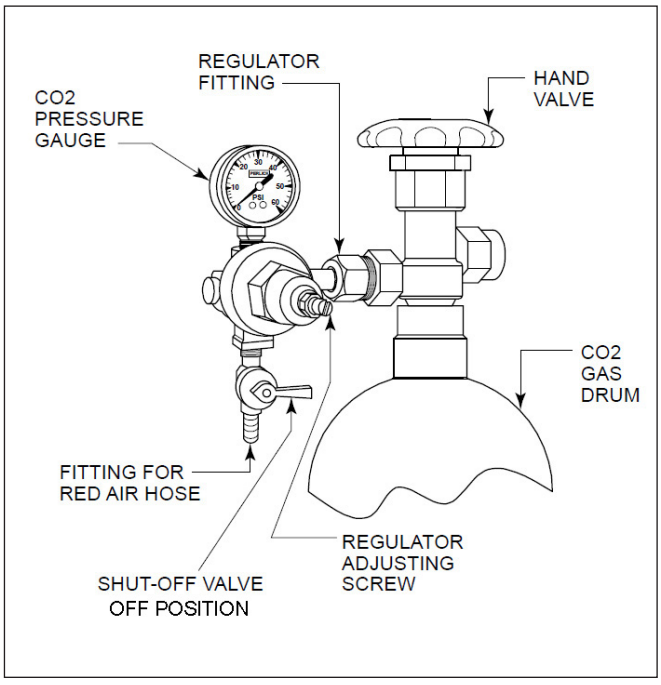

1. Remove the blue plug from the regulator fitting, but do not remove the carbonic washer.
2. Screw regulator onto gas cylinder valve. Tighten with wrench until vertically straight. Be sure that the shut-off valve on the regulator is in the OFF (horizontal) position.
3. Place screw clamp over the end of red line and push onto regulator tail piece. Tighten clamp with a screwdriver.
4. Turn regulator adjusting screw counterclockwise until it turns freely.
5. Turn hand valve counter-clockwise on the CO2 cylinder to the fully open position.
6. Turn regulator adjusting screw clockwise until desired pressure is reached (approximately 12-15 lbs.) Tighten stop nut on adjusting screw.
7. Open shut-out valve on bottom of regulator.
8. Dilute a small amount of liquid dishwashing soap and rub the soapy mixture around connections. If bubbles appear, tighten connection.

MOUNTING HOLE TEMPLATE FOR DRAFT ARMS AND ADARA SIGNATURE TOWERS

ATTENTION INSTALLERS

THIS IS A FULL SIZE TEMPLATE. PLEASE CONFIRM THAT PRINT DIMENSIONS ARE TO SCALE PRIOR TO INSTALLATION.

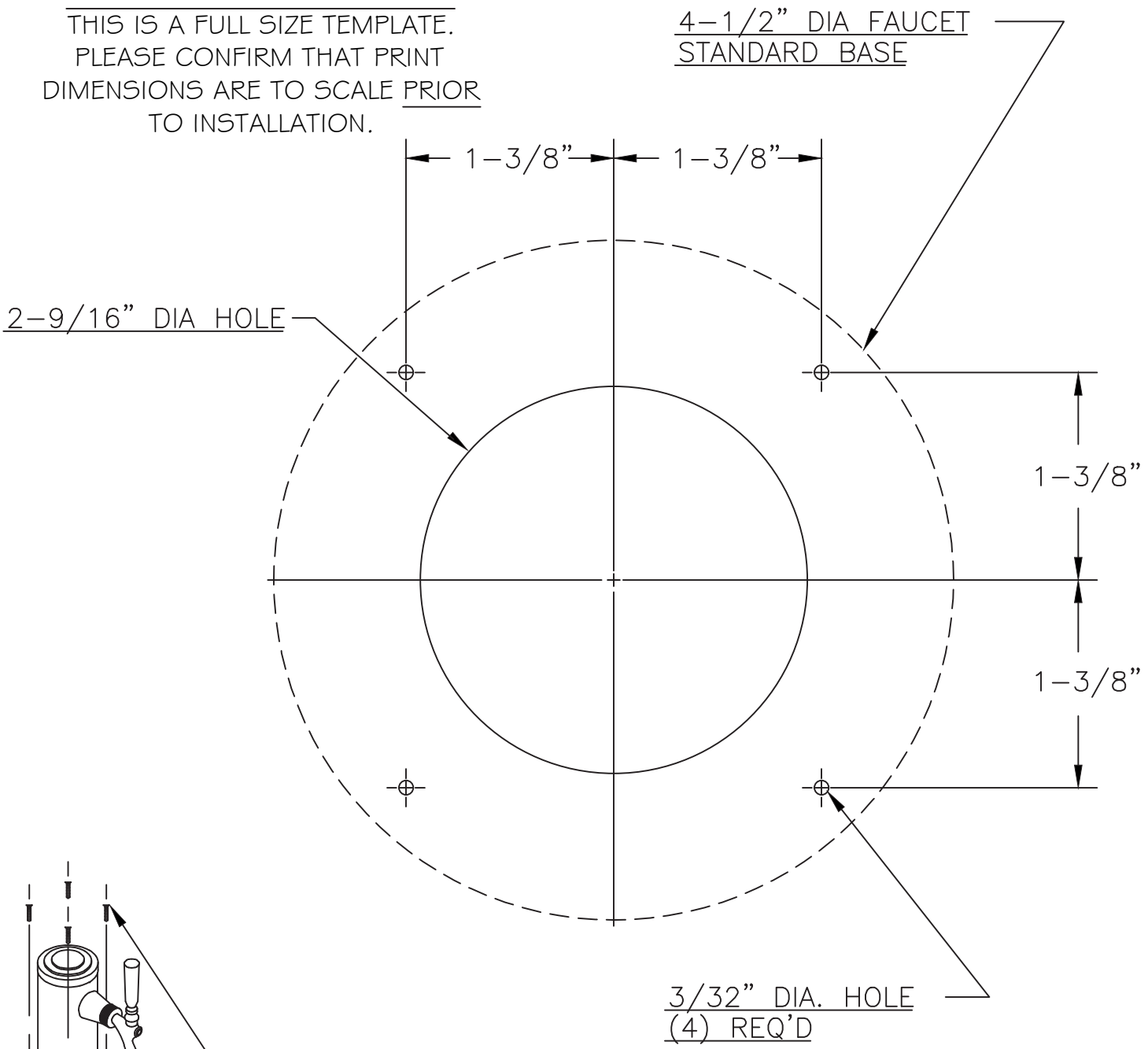

#8 X 1–1/4" LG S.M. SCREWS (4) REQ'D

NOTE: The hole placement for the Draft Arm and Adara towers are the same even though the decorative flanges are different shapes.

THE

PERLICK®

CORPORATION

8300 W Good Hope Rd

Milwaukee

Milwaukee, WI 53223

Form No. Z3025
Rev. 10.01.25