100383073_2000837361_Rev E

KNIGHT COMMERCIAL BOILER XL

Installation & Operation Manual
Models: 400 - 500
Series 100 & 101
and 650 - 1000
Series 110 & 111

⚠ WARNING This manual must only be used by a qualified heating installer / service technician. Read all instructions, including this manual and the Knight XL Service Manual, before installing. Perform steps in the order given. Failure to comply could result in severe personal injury, death, or substantial property damage.

Save this manual for future reference.

Lochinvar®
HIGH EFFICIENCY BOILERS & WATER HEATERS

Contents

HAZARD DEFINITIONS 2
PLEASE READ BEFORE PROCEEDING 3
THE KNIGHT XL -- HOW IT WORKS 4-6
RATINGS 7
PRODUCT SUMMARY 8-9
1. DETERMINE BOILER LOCATION
Provide Air Openings to Room 10
Flooring and Foundation 12
Residential Garage Installation 12
Vent and Air Piping 12
Prevent Combustion Air Contamination 12
Corrosive Contaminants and Sources 13
Using an Existing Vent System to Install a New Boiler ... 13
Removing a Boiler from Existing Common Vent 14
2. PREPARE BOILER
Remove Boiler from Wood Pallet 15
Gas Conversions 15-16
3. GENERAL VENTING
Direct Venting Options 17
Install Vent and Combustion Air Piping 18
Requirements for Installation in Canada 19
Sizing 19
Min./Max. Combustion Air & Vent Piping Lengths 19
Materials 20
Optional Room Air 21
PVC/CPVC 21-22
Polypropylene 23
Stainless Steel Vent 24
4. SIDEWALL DIRECT VENTING
Vent/Air Termination - Sidewall 26-29
Determine Location 26-28
Prepare Wall Penetrations 28-29
Multiple Vent/Air Terminations 29
Sidewall Termination - Optional Concentric Vent 30-32
5. VERTICAL DIRECT VENTING
Vent/Air Termination - Vertical 33-34
Determine Location 33
Prepare Roof Penetrations 34
Multiple Vent/Air Terminations 34
Vertical Termination - Optional Concentric Vent 35-36
Alternate Vertical Concentric Venting 37-38
6. OUTDOOR INSTALLATIONS 39-40
7. HYDRONIC PIPING
System Water Piping Methods 41
Low Water Cutoff Device 41
Chilled Water System 41
Freeze Protection 41
General Piping Information 41
Near Boiler Piping Components 43
Circulator Sizing 44
Near Boiler Piping Connections 44
8. GAS CONNECTIONS
Connecting Gas Supply Piping 51
Natural Gas 52
Pipe Sizing for Natural Gas 52
Natural Gas Supply Pressure Requirements 52
Propane Gas 52
Pipe Sizing for Propane Gas 52
Propane Supply Pressure Requirements 52
Check Inlet Gas Supply 53
Gas Pressure 54
Gas Valve Replacement 54
9. FIELD WIRING
Line Voltage Connections 55
Low Voltage Connections 55
Wiring of the Cascade 57
10. CONDENSATE DISPOSAL
Condensate Drain 59
11. START-UP 60-69
12. OPERATING INFORMATION
General 70
Cascade 73
Sequence of Operation 74
Knight XL Control Module 75
13. MAINTENANCE
Maintenance and Annual Startup 76
14. DIAGRAMS
Wiring Diagram 81
Ladder Diagram 82
Revision Notes ..... Back Cover

Hazard definitions

The following defined terms are used throughout this manual to bring attention to the presence of hazards of various risk levels or to important information concerning the life of the product.

⚠ DANGER DANGER indicates an imminently hazardous situation which, if not avoided, will result in death or serious injury.

⚠ WARNING WARNING indicates a potentially hazardous situation which, if not avoided, could result in death or serious injury.

⚠ CAUTION CAUTION indicates a potentially hazardous situation which, if not avoided, may result in minor or moderate injury.

CAUTION CAUTION used without the safety alert symbol indicates a potentially hazardous situation which, if not avoided, may result in property damage.

NOTICE NOTICE indicates special instructions on installation, operation, or maintenance that are important but not related to personal injury or property damage.

Please read before proceeding

⚠ WARNING

Installer – Read all instructions, including this manual and the Knight XL Service Manual, before installing. Perform steps in the order given.

User – This manual is for use only by a qualified heating installer/service technician. Refer to the User's Information Manual for your reference.

Have this boiler serviced/inspected by a qualified service technician, at least annually.

Failure to comply with the above could result in severe personal injury, death or substantial property damage.

NOTICE

When calling or writing about the boiler – Please have the boiler model and serial number from the boiler rating plate.

Consider piping and installation when determining boiler location.

Any claims for damage or shortage in shipment must be filed immediately against the transportation company by the consignee.

Factory warranty (shipped with unit) does not apply to units improperly installed or improperly operated.

⚠ WARNING

Failure to adhere to the guidelines on this page can result in severe personal injury, death, or substantial property damage.

⚠ WARNING

If the information in this manual is not followed exactly, a fire or explosion may result causing property damage, personal injury or loss of life.

This appliance MUST NOT be installed in any location where gasoline or flammable vapors are likely to be present.

WHAT TO DO IF YOU SMELL GAS

- Do not try to light any appliance.
- Do not touch any electric switch; do not use any phone in your building.
- Immediately call your gas supplier from a near by phone. Follow the gas supplier's instructions.
- If you cannot reach your gas supplier, call the fire department.
- Installation and service must be performed by a qualified installer, service agency, or the gas supplier.

⚠ WARNING

DO NOT install units in rooms or environments that contain corrosive contaminants (see Table 1A). Failure to comply could result in severe personal injury, death, or substantial property damage.

⚠ WARNING

The California Safe Drinking Water and Toxic Enforcement Act requires the Governor of California to publish a list of substances known to the State of California to cause cancer, birth defects, or other reproductive harm, and requires businesses to warn of potential exposure to such substances.

This product contains a chemical known to the State of California to cause cancer, birth defects, or other reproductive harm. This boiler can cause low level exposure to some of the substances listed in the Act.

When servicing boiler –

- To avoid electric shock, disconnect electrical supply before performing maintenance.
- To avoid severe burns, allow boiler to cool before performing maintenance.

Boiler operation –

- Do not block flow of combustion or ventilation air to the boiler.
- Should overheating occur or gas supply fail to shut off, do not turn off or disconnect electrical supply to circulator. Instead, shut off the gas supply at a location external to the appliance.
- Do not use this boiler if any part has been under water. The possible damage to a flooded appliance can be extensive and present numerous safety hazards. Any appliance that has been under water must be replaced.
- The installer must verify that at least one carbon monoxide alarm has been installed within a residential living space or home following the alarm manufacturer's instructions and applicable local codes before putting the appliance into operation

Boiler water –

- Thoroughly flush the system to remove debris. Use an approved pre-commissioning cleaner (see Start-Up Section), without the boiler connected, to clean the system and remove sediment. The high efficiency heat exchanger can be damaged by build-up or corrosion due to sediment.
  NOTE: Cleaners are designed for either new systems or pre-existing systems. Choose accordingly.

Freeze protection fluids –

- NEVER use automotive antifreeze. Use only inhibited propylene glycol solutions, which are specifically formulated for hydronic systems. Ethylene glycol is toxic and can attack gaskets and seals used in hydronic systems.

The Knight XL - How it works...

1. **Stainless steel heat exchanger**
   Allows system water to flow through specially designed coils for maximum heat transfer, while providing protection against flue gas corrosion. The coils are encased in a jacket that contains the combustion process.
2. **Combustion chamber access cover**
   Allows access to the combustion side of the heat exchanger coils.
3. **Blower**
   The blower pulls in air and gas through the venturi. Air and gas mix inside the blower and are pushed into the burner, where they burn inside the combustion chamber.
4. **Gas valve**
   The gas valve senses the negative pressure created by the blower, allowing gas to flow only if the gas valve is powered and combustion air is flowing.
5. **Venturi**
   The venturi controls air and gas flow into the burner.
6. **Flue gas sensor (limit rated)**
   This sensor monitors the flue gas exit temperature. The control module will modulate and shut down the boiler if the flue gas temperature gets too hot. This protects the flue pipe from overheating.
7. **Boiler outlet temperature sensor (housed with the high limit sensor)**
   This sensor monitors boiler outlet water temperature (system supply). If selected as the controlling sensor, the control module adjusts boiler firing rate so the outlet temperature is correct.
8. **Boiler inlet temperature sensor**
   This sensor monitors return water temperature (system return). If selected as the controlling sensor, the control module adjusts the boiler firing rate so the inlet temperature is correct.
9. **Temperature and pressure gauge (field installed, not shown)**
   Monitors the outlet temperature of the boiler as well as the system water pressure.
10. **Electronic display**
    Digital controls with SMART TOUCH screen technology, full color display, and an 7" user interface screen.
11. **Flue pipe adapter**
    Allows for the connection of the PVC vent pipe system to the boiler.
12. **Burner (not shown)**
    Made with metal fiber and stainless steel construction, the burner uses pre-mixed air and gas and provides a wide range of firing rates.
13. **Water outlet (system supply)**
    A 2" (Models 400 - 800) or 2.5" (Model 1000) water connection that supplies hot water to the system.
14. **Water inlet (system return)**
    A 2" (Models 400 - 800) or 2.5" (Model 1000) copper water connection that returns water from the system to the heat exchanger.
15. **Gas connection pipe**
    Threaded pipe connection of 1" or 1 1/4" (depending on the model). This pipe should be connected to the incoming gas supply for the purpose of delivering gas to the boiler.
16. **SMART TOUCH Control Module**
    The SMART TOUCH Control responds to internal and external signals and controls the blower, gas valve, and pumps to meet the heating demand.
17. **Air intake adapter**
    Allows for the connection of the PVC air intake pipe to the boiler.
18. **High voltage junction box**
    The junction box contains the connection points for the line voltage power and all pumps.
19. **Boiler drain port**
    Location from which the heat exchanger can be drained.
20. **Low voltage connection board**
    The connection board is used to connect external low voltage devices.
21. **Low voltage wiring connections (knockouts)**
    Conduit connection points for the low voltage connection board.
22. **Condensate drain connection**
    Connects the condensate drain line to a 1/2" PVC connection.
23. **Access cover - front**
    Provides access to the gas train and the heat exchanger.
24. **Ignition electrode**
    Provides direct spark for igniting the burner.
25. **Flame inspection window**
    The quartz glass window provides a view of the burner surface and flame.
26. **Relief valve**
    Protects the heat exchanger from an over pressure condition. The relief valve provided with the unit is set at 50 PSI.
27. **Flame sensor**
    Used by the control module to detect the presence of burner flame.
28. **Line voltage wiring connections (knockouts)**
    Conduit connection points for the high voltage junction box.
29. **Top panel**
    Removable panel to gain access to the internal components.
30. **Power switch**
    Turns 120 VAC ON/OFF to the boiler.
31. **Air box**
    The air box houses the combustion air filter.
32. **Air pressure switch (400 and 800 models only)**
    The air pressure switch detects blocked flue/inlet conditions. break the control circuit, shutting the boiler down.
33. **Pump relays**
    The pump relay is used to connect the boiler, system and DHW pumps.
34. **Transformer**
    The transformer provides 24V power to the integrated control.
35. **High limit sensor (housed with the outlet temperature sensor)**
    Device that monitors the outlet water temperature. If the temperature exceeds its setting, the integrated control will break the control circuit, shutting the boiler down.
36. **Air Filter (not shown)**
    The air filter prevents dirt and debris from entering the burner.
37. **Flow Switch**
    The flow switch is a safety device that ensures flow through the heat exchanger during operation. This appliance is low mass and should never be operated without flow. The flow switch makes contact when flow is detected and allows the unit to operate. If flow is discontinued during oepration for any reason, the flow switch will break the control circuit and the unit will shut down.

The Knight XL - How it works... *(continued)*

Model 400 - 500

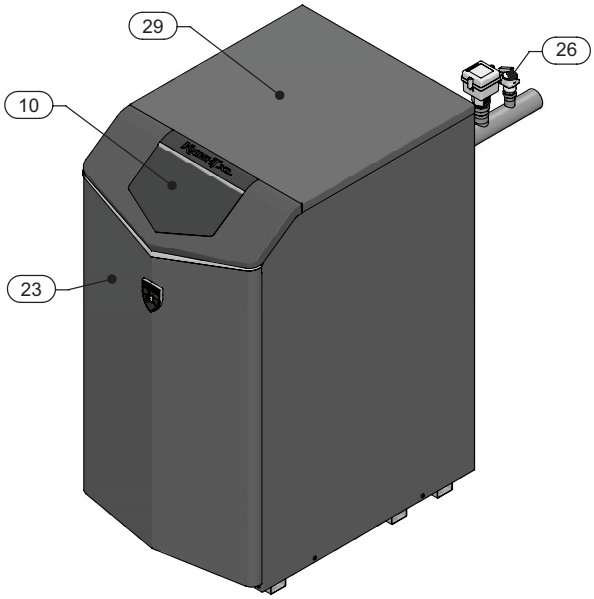

Front View - Model 400

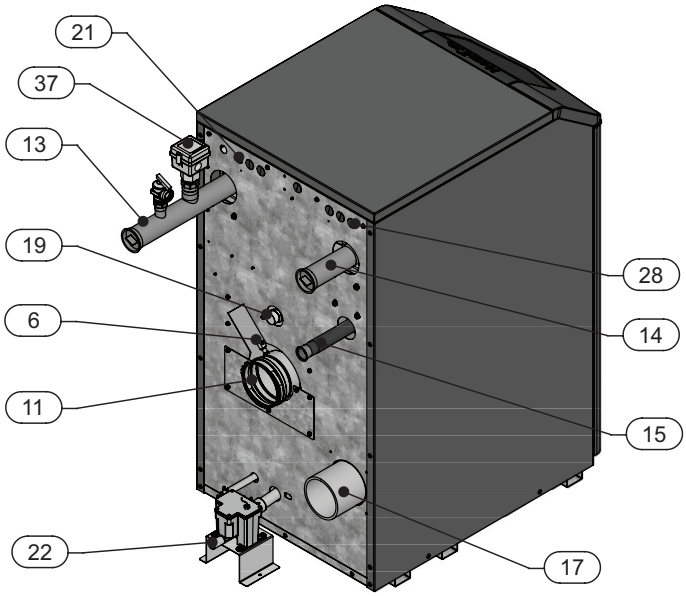

Rear View - Model 400

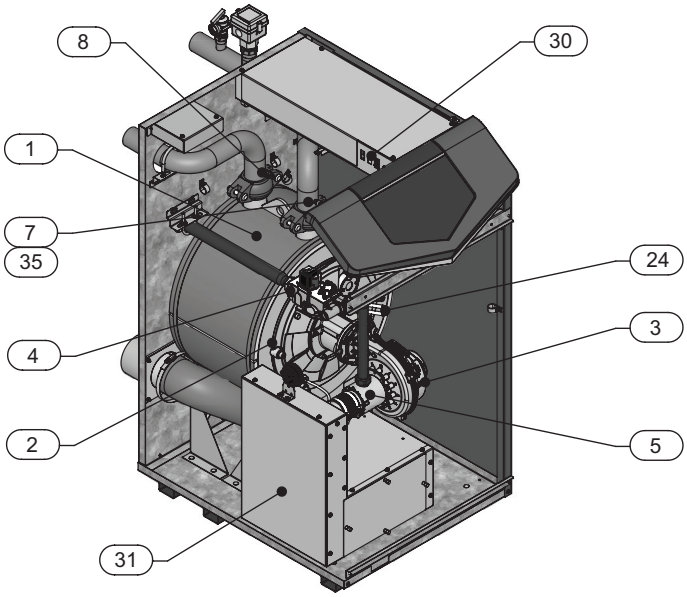

Left Side (inside unit) - Model 400

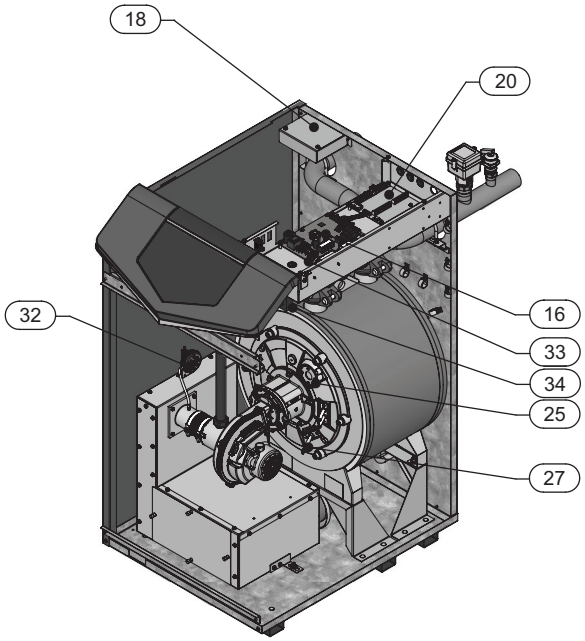

Right Side (inside unit) - Model 400

The Knight XL - How it works...

Model 650 - 1000

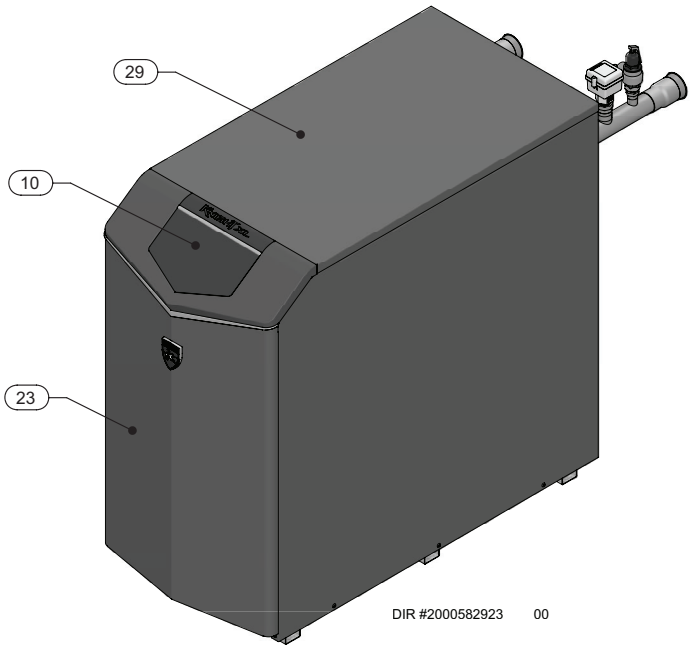

Front View - Model 1000

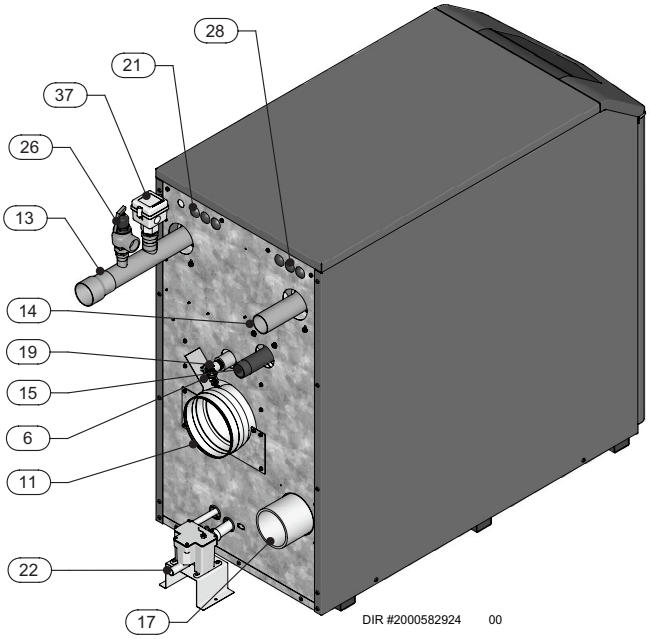

Left Side (inside unit) - Model 1000

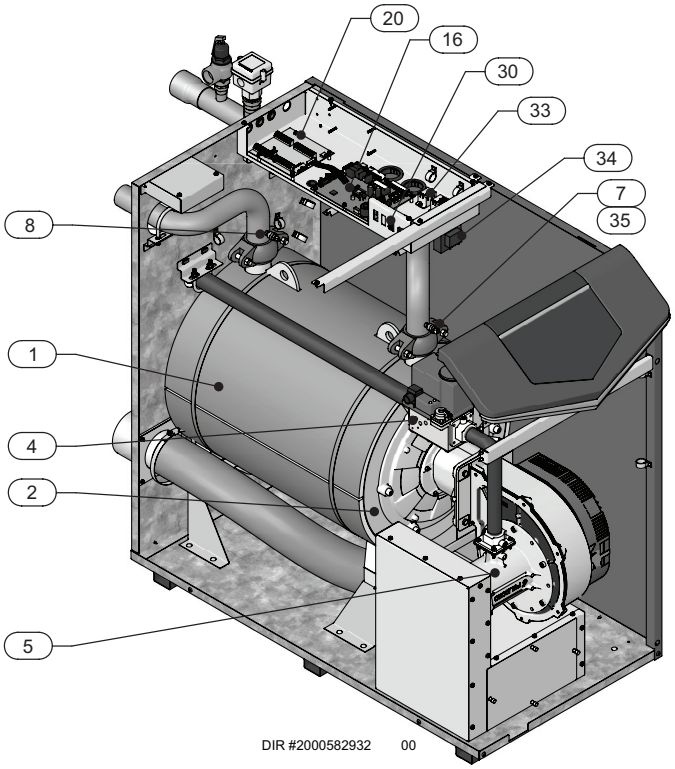

Rear View - Model 1000

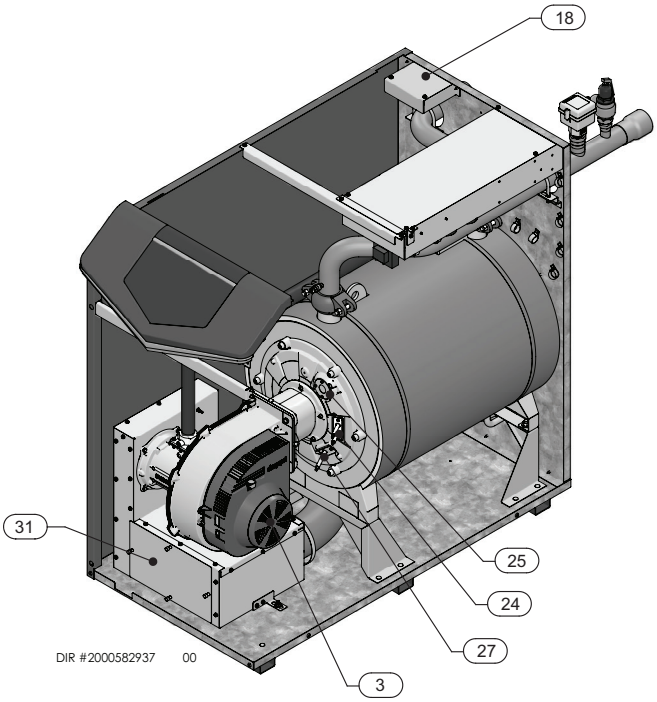

Left Side (inside unit) - Model 1000

Ratings

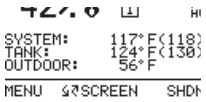

DOE

AHRI CERTIFIED www.ahridirectory.org

Knight XL Boiler AHRI Rating

Model Number Note: Change "N" to "L" for L.P. gas models.	Input MBH (Note 2) Min	Input MBH (Note 2) Max	Gross Output MBH (Note 1)	Net AHRI Ratings Water, MBH (Note 2)
KBX0400(N,L)	39.9	399	387	337
KBX0500(N,L)	50	500	485	422
KBX0650(N,L)	65	650	631	549
KBX0800(N,L)	80	800	776	675
KBX1000(N,L)	99.9	999	969	843
KBX0400-O(N,L)	39.9	399	384	334
KBX0500-O(N,L)	50	500	482	419
KBX0650-O(N,L)	65	650	626	544
KBX0800-O(N,L)	80	800	770	670
KBX1000-O(N,L)	99.9	999	962	837

Other Specifications

Model Number	Boiler Water Content Gallons	Water Connections	Gas Connections	Air Size	Vent Size (Note 3)
KBX0400(N,L)	4.4	2"	1"	4"	4"
KBX0500(N,L)	4.9	2"	1"	4"	4"
KBX0650(N,L)	6.2	2"	1-1/4"	4"	6"
KBX0800(N,L)	7.3	2"	1-1/4"	4"	6"
KBX1000(N,L)	8.8	2-1/2"	1-1/4"	6"	6"
KBX0400-O(N,L)	4.4	2"	1"	4"	4"
KBX0500-O(N,L)	4.9	2"	1"	4"	4"
KBX0650-O(N,L)	6.2	2"	1-1/4"	4"	6"
KBX0800-O(N,L)	7.3	2"	1-1/4"	4"	6"
KBX1000-O(N,L)	8.8	2-1/2"	1-1/4"	6"	6"

NOTICE Maximum allowed working pressure is located on the rating plate.

Notes:

1. Knight XL boilers require special gas venting Use only the vent materials and methods specified in the Knight XL Installation & Operation Manual.
2. Standard Knight XL boilers are equipped to operate from sea level to 4,500 feet only with no adjustments. Above 2,000 feet elevation, the boiler will de-rate by 4% for each 1,000 feet above sea level up to 4,500 feet. De-rate values are based on proper combustion calibration and CO_2 adjusted to the recommended levels.
3. High altitude Knight XL boilers are equipped to operate from 3,000 to 9,600 feet only. See chart for de-rates. High altitude models are manufactured with a different control module for altitude operation, but the operation given in this manual remains the same as the standard models. A high altitude label is also affixed to the unit.
   De-rate vlues are based on proper combustion calibration and CO_2 adjusted to the recommended levels.
4. For Canadian installations above 2,000 feet elevation, follow all applicable local codes and regulations.
5. Ratings have been confirmed by the Hydronics Section of AHRI.
6. Knight XL boilers comply with the requirements of CSD-1 Section CW-400 requirements as a temperature operation control. The manual reset high limit provided with the Knight XL is listed to UL353 or UL60730-2-9.

Model	Derate per 1,000 feet	
	Derate up to 5,200 feet	Derate 5,200 feet to 9,600 feet
0400	0.00%	1.70%
0500	0.50%	1.80%
0650	1.20%	1.90%
0800	2.00%	2.10%
1000	3.00%	2.30%

Product Summary

	KBX-0400	KBX-0500	KBX-0650	KBX-0800	KBX-1000
WATER					
GALLON CAPACITY	4.4	4.9	6.2	7.3	8.8
HEATING SURFACE (SQ. FT.)	34.80	39.10	52.20	60.90	75.40
WATER CONNECTIONS	2"	2"	2"	2"	2-1/2"
20°F ΔT WATER FLOW (GPM)	38	48	62	76	96
HEAD LOSS (FT. OF HD.)	10.00	14.00	16.00	17.00	18.00
35°F ΔT WATER FLOW (GPM)	22	27	36	44	54
HEAD LOSS (FT. OF HD.)	4.00	8.00	7.00	9.00	6.00
MAX. WORKING PRESSURE (PSI)	160	160	160	160	160
# OF RELIEF VALVES	1	1	1	1	1
RELIEF VALVE SIZE	3/4"	3/4"	3/4"	3/4"	3/4"
RELIEF VALVE RATING (MBH)	697	697	697	1352	1352
RELIEF VALVE PRESSURE RATING (PSI)	50	50	50	50	50
GAS					
INLET CONNECTION	1"	1"	1-1/4"	1-1/4"	1-1/4"
MAX. INLET PRESSURE, NAT	14.0" w.c.	14.0" w.c.	12.0" w.c.	12.0" w.c.	12.0" w.c.
MIN. INLET PRESSURE, NAT	4.0" w.c.	4.0" w.c.	4.0" w.c.	4.0" w.c.	4.0" w.c.
MAX. INLET PRESSURE, LP	14.0" w.c.	14.0" w.c.	14.0" w.c.	14.0" w.c.	14.0" w.c.
MIN. INLET PRESSURE, LP	8.0" w.c.	8.0" w.c.	8.0" w.c.	8.0" w.c.	8.0" w.c.
BTU/HR INPUT	399,000	500,000	650,000	800,000	999,000
BTU/HR OUTPUT (HIGH FIRE)	387,030	485,000	630,500	776,000	969,030
BTU/HR OUTPUT (LOW FIRE)	38,703	48,500	63,050	77,600	96,903
ELECTRICAL (Boiler and Pump Only)					
VOLTAGE/HEATER	120	120	120	120	120
VOLTAGE/CONTROL	24	24	24	24	24
FLA	3.0	3.1	3.3	4.3	6.6
MCA	3.8	3.9	4.1	5.4	8.3
DIMENSIONS					
HEIGHT	45"	45"	45"	45"	45"
WIDTH	24"	24"	24"	24"	24"
DEPTH	33-1/2"	33-1/2"	42-1/2"	42-1/2"	50"
SERVICE CLEARANCES					
FRONT	24"	24"	24"	24"	24"
REAR	24"	24"	24"	24"	24"
RIGHT SIDE	0"	0"	0"	0"	0"
LEFT SIDE	0"	0"	0"	0"	0"
TOP	24"	24"	24"	24"	24"

Product Summary continued (Indoor Models Only)

	KBX-0400	KBX-0500	KBX-0650	KBX-0800	KBX-1000
DIRECT VENTING					
SIZE	4"	4"	6"	6"	6"
VENT CATEGORY	IV	IV	IV	IV	IV
VENT MATERIAL	PVC/CPVC/ PP/ AL29-4C	PVC/CPVC/ PP/ AL29-4C	PVC/CPVC/ PP/ AL29-4C	PVC/CPVC/ PP/ AL29-4C	PVC/CPVC/ PP/ AL29-4C

1 Determine boiler location

Installation must comply with:

- Local, state, provincial, and national codes, laws, regulations, and ordinances.
- National Fuel Gas Code, ANSI Z223.1 – latest edition.
- Standard for Controls and Safety Devices for Automatically Fired Boilers, ANSI/ASME CSD-1, when required.
- National Electrical Code.
- For Canada only: B149.1 Installation Code, CSA C22.1 Canadian Electrical Code Part 1 and any local codes.

NOTICE The Knight XL gas manifold and controls met safe lighting and other performance criteria when the boiler underwent tests specified in ANSI Z21.13 – latest edition.

Before locating the boiler, check:

1. Check for nearby connection to:
   - System water piping
   - Venting connections
   - Gas supply piping
   - Electrical power
2. Locate the appliance so that if water connections should leak, water damage will not occur. When such locations cannot be avoided, it is recommended that a suitable drain pan, adequately drained, be installed under the appliance. The pan must not restrict combustion air flow. Under no circumstances is the manufacturer to be held responsible for water damage in connection with this appliance, or any of its components.
3. Check area around the boiler. Remove any combustible materials, gasoline and other flammable liquids.

⚠ WARNING Failure to keep boiler area clear and free of combustible materials, gasoline, and other flammable liquids and vapors can result in severe personal injury, death, or substantial property damage.

4. The Knight XL must be installed so that gas control system components are protected from dripping or spraying water or rain during operation or service.
5. If a new boiler will replace an existing boiler, check for and correct system problems, such as:
   - System leaks causing oxygen corrosion or heat exchanger cracks from hard water deposits.
   - Incorrectly-sized expansion tank.
   - Lack of freeze protection fluids in boiler water causing system and boiler to freeze and leak.
   - Debris left from existing piping, if not flushed and cleaned with an appropriate cleaner.
6. Check around the boiler for any potential air contaminants that could risk corrosion to the boiler or the boiler combustion air supply (see Table 1A). Prevent combustion air contamination. Remove any of these contaminants from the boiler area.

⚠ WARNING DO NOT install units in rooms or environments that contain corrosive contaminants (see Table 1A). Failure to comply could result in severe personal injury, death, or substantial property damage.

DO NOT install the boiler in a room likely to freeze.

⚠ WARNING Unless specified as an outdoor boiler, this appliance is certified as an indoor appliance. Do not install the appliance outdoors or locate where the appliance will be exposed to freezing temperatures
Do not install the appliance where condensation may form on the inside or outside of the appliance, or where condensation may fall onto the appliance.
Failure to install the appliance indoors could result in severe personal injury, death, or substantial property damage.

⚠ WARNING This appliance requires a special venting system. The vent connection to the appliance must be made with the starter CPVC/stainless steel pipe section. The field provided PVC vent fittings must be cemented to the CPVC pipe section. Use only the vent materials, primer and cement specified in this manual to make the vent connections. Failure to follow this warning could result in fire, personal injury, or death.

Closet and alcove installations

A closet is any room the boiler is installed in which is less than 26 cubic feet for KBX400-500 models, 35 cubic feet for KBX650-800 models, and 39 cubic feet for KBX1000 models.

An alcove is any room which meets the criteria for a closet with the exception that it does not have a door.

Example: Room dimensions = 5 feet long, 4 feet wide, and 8 foot ceiling = 5 x 4 x 8 = 160 cubic feet. This would be considered a closet for a Knight XL Boiler.

⚠ WARNING For closet and alcove installations as shown in FIG.'s 1-1 and 1-2, CPVC or stainless steel vent material must be used inside the structure. The ventilating air openings shown in FIG.'s 1-1 and 1-2 are required for this arrangement. Failure to follow this warning could result in fire, personal injury, or death.

Provide clearances:

Clearances from combustible materials

1. Hot water pipes—at least 1/4" (6 mm) from combustible materials.
2. Vent pipe – Follow special vent system manufacturer's instructions.
3. See FIG.'s 1-1 and 1-2 for other clearance minimums.

Recommended clearances for service access

- Front / Top / Rear..... 24"

NOTICE Multiple appliances can be installed side by side with no clearances between adjacent appliances because the appliances are approved for zero clearances from combustible surfaces; however, service access will be limited from the sides. Consult with the local inspection authority for approval.

NOTICE If you do not provide the recommended service clearances shown, it may not be possible to service the boiler without removing it from the space.

1 Determine boiler location *(continued)*

Figure 1-1 *Closet Installation - Minimum Required Clearances*

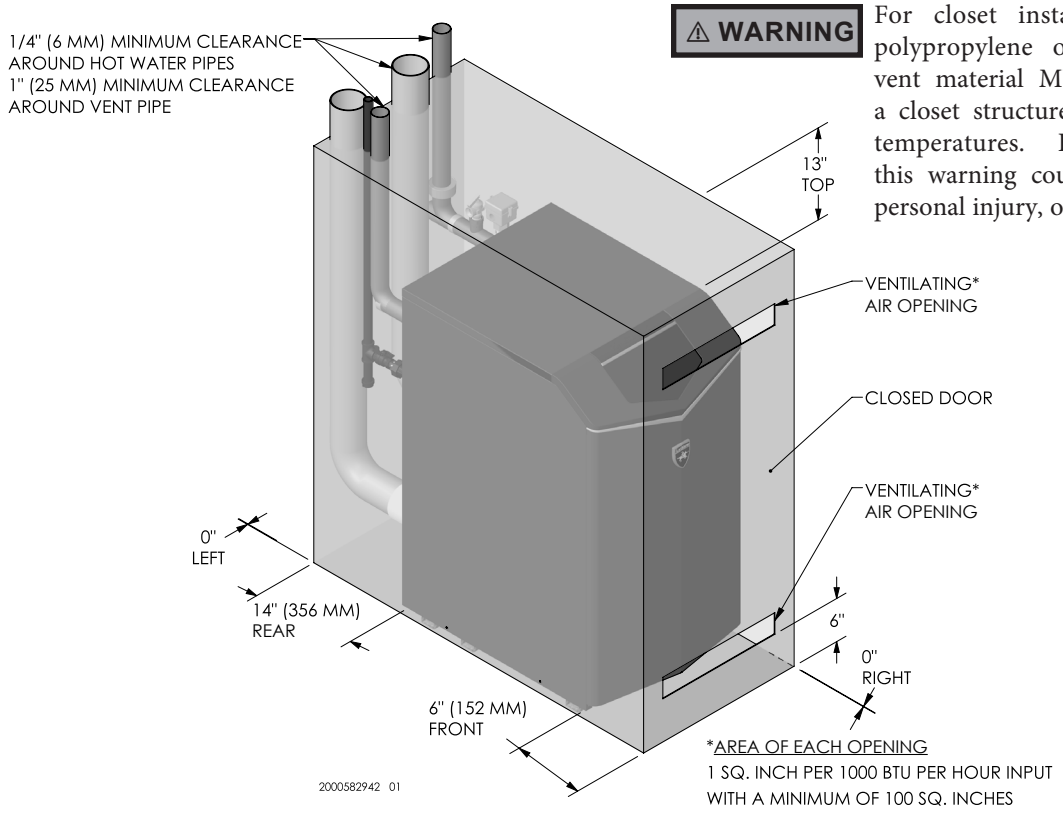

⚠ WARNING For closet installations, CPVC, polypropylene or stainless steel vent material MUST BE used in a closet structure due to elevated temperatures. Failure to follow this warning could result in fire, personal injury, or death.

Figure 1-2 *Alcove Installation - Minimum Required Clearances*

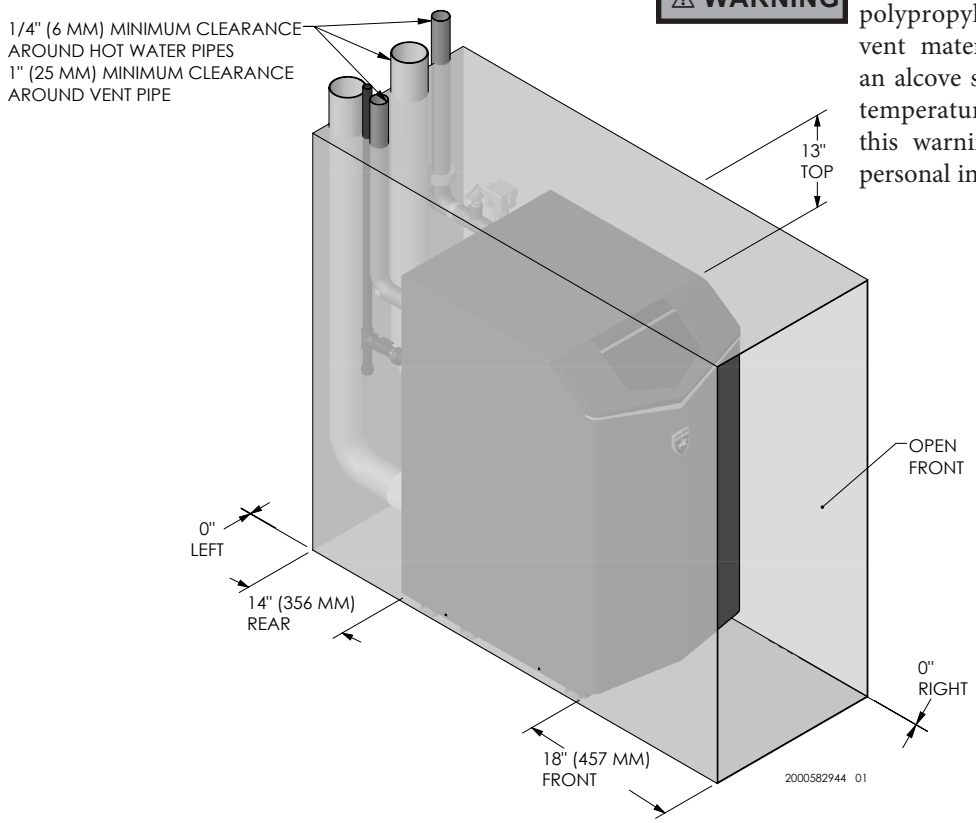

⚠ WARNING For alcove installations, CPVC, polypropylene or stainless steel vent material MUST BE used in an alcove structure due to elevated temperatures. Failure to follow this warning could result in fire, personal injury, or death.

1 Determine boiler location

Provide air openings to room:

Knight XL alone in boiler room

1. No air ventilation openings into the boiler room are needed when clearances around the Knight XL are at least equal to the SERVICE clearances shown in FIG.'s 1-1 and 1-2. For spaces that do NOT supply this clearance, provide two openings as shown in FIG. 1-1. Each opening must provide one square inch free area per 1,000 Btu/hr of boiler input.

Knight XL in same space with other gas or oil-fired appliances

1. Follow the National Fuel Gas Code (U.S.) or CSA B149.1 (Canada) to size/verify size of the combustion/ventilation air openings into the space.

⚠ WARNING The space must be provided with combustion/ventilation air openings correctly sized for all other appliances located in the same space as the Knight XL.

Do not install the boiler in an attic.

Failure to comply with the above warnings could result in severe personal injury, death, or substantial property damage.

2. Size openings only on the basis of the other appliances in the space. No additional air opening free area is needed for the Knight XL because it takes its combustion air from outside (direct vent installation).

Flooring and foundation

Flooring

The Knight XL is approved for installation on combustible flooring, but must never be installed on carpeting.

⚠ WARNING Do not install the boiler on carpeting even if foundation is used. Fire can result, causing severe personal injury, death, or substantial property damage.

If flooding is possible, elevate the boiler sufficiently to prevent water from reaching the boiler.

Seismic bracing

For installations requiring seismic bracing, the base legs of the appliance are designed to allow for the use of unistrut channel to meet seismic requirements.

Residential garage installation

Precautions

Take the following precautions when installing the appliance in a residential garage. If the appliance is located in a residential garage, it should be installed in compliance with the latest edition of the National Fuel Gas Code, ANSI Z223.1 and/or CAN/CGA-B149 Installation Code.

- Appliances located in residential garages and in adjacent spaces that open to the garage and are not part of the living space of a dwelling shall be installed so that all burners and burner ignition devices are located not less than 18 inches (46 cm) above the floor.
- The appliance shall be located or protected so that it is not subject to physical damage by a moving vehicle.

Vent and air piping

The Knight XL requires a special vent system, designed for pressurized venting.

The boiler is to be used for either direct vent installation or for installation using indoor combustion air. When room air is considered, see the General Venting Section. Note prevention of combustion air contamination below when considering vent/air termination.

Vent and air must terminate near one another and may be vented vertically through the roof or out a side wall, unless otherwise specified. You may use any of the vent/air piping methods covered in this manual. Do not attempt to install the Knight XL using any other means.

Be sure to locate the boiler such that the vent and air piping can be routed through the building and properly terminated. The vent/air piping lengths, routing and termination method must all comply with the methods and limits given in this manual.

Prevent combustion air contamination

Install air inlet piping for the Knight XL as described in this manual. Do not terminate vent/air in locations that can allow contamination of combustion air. Refer to Table 1A for products and areas which may cause contaminated combustion air.

⚠ WARNING You must pipe combustion air to the boiler air intake. Ensure that the combustion air will not contain any of the contaminants in Table 1A. Contaminated combustion air will damage the boiler, resulting in possible severe personal injury, death or substantial property damage. Do not pipe combustion air near a swimming pool, for example. Also, avoid areas subject to exhaust fumes from laundry facilities. These areas will always contain contaminants.

1 Determine boiler location *(continued)*

***Table 1A** Corrosive Contaminants and Sources*

Products to avoid:
Spray cans containing chloro/fluorocarbons
Permanent wave solutions
Chlorinated waxes/cleaners
Chlorine-based swimming pool chemicals
Calcium chloride used for thawing
Sodium chloride used for water softening
Refrigerant leaks
Paint or varnish removers
Hydrochloric acid/muriatic acid
Cements and glues
Antistatic fabric softeners used in clothes dryers
Chlorine-type bleaches, detergents, and cleaning solvents found in household laundry rooms
Adhesives used to fasten building products and other similar products
Areas likely to have contaminants
Dry cleaning/laundry areas and establishments
Swimming pools
Metal fabrication plants
Beauty shops
Refrigeration repair shops
Photo processing plants
Auto body shops
Plastic manufacturing plants
Furniture refinishing areas and establishments
New building construction
Remodeling areas
Garages with workshops

When using an existing vent system to install a new boiler:

⚠ WARNING Failure to follow all instructions can result in flue gas spillage and carbon monoxide emissions, causing severe personal injury or death.

Check the following venting components before installing:

- **Material** - For materials listed for use with this appliance, see Section 3 - General Venting. For polypropylene or stainless steel venting, an adapter of the same manufacturer must be used at the flue collar connection.
- **Size** - To ensure proper pipe size is in place, see Table 3A. Check to see that this size is used throughout the vent system.
- **Manufacturer** - For a stainless steel or polypropylene application, you must use only the listed manufacturers and their type product listed in Tables 3H and 3I for CAT IV positive pressure venting with flue producing condensate.
- **Supports** - Non-combustible supports must be in place allowing a minimum 1/4" rise per foot. The supports should adequately prevent sagging and vertical slippage, by distributing the vent system weight. For additional information, consult the vent manufacturer's instructions for installation.
- **Terminations** - Carefully review Sections 3 through 5 to ensure requirements for the location of the vent and air terminations are met and orientation of these fit the appropriate image from the Sidewall or Vertical options listed in the General Venting Section. For stainless steel vent, only use terminations listed in Table 3J for the manufacturer of the installed vent.
- **Seal** - With prior requirements met, the system should be tested to the procedure listed in parts (c) through (f) of the Removal of an Existing Boiler Section of this manual.

With polypropylene and stainless steel vent, seal and connect all pipe and components as specified by the vent manufacturer used; with PVC/CPVC vent, see the Installing Vent or Air Piping Section of this manual.

⚠ WARNING If any of these conditions are not met, the existing system must be updated or replaced for that concern. Failure to follow all instructions can result in flue gas spillage and carbon monoxide emissions, causing severe personal injury or death.

1 Determine boiler location

When removing a boiler from existing common vent system:

⚠ DANGER Do not install the Knight XL into a common vent with any other appliance. This will cause flue gas spillage or appliance malfunction, resulting in possible severe personal injury, death, or substantial property damage.

At the time of removal of an existing boiler, the following steps shall be followed with each appliance remaining connected to the common venting system placed in operation, while the other appliances remaining connected to the common venting system are not in operation.

a. Seal any unused openings in the common venting system.

b. Visually inspect the venting system for proper size and horizontal pitch and determine there is no blockage or restriction, leakage, corrosion, or other deficiencies, which could cause an unsafe condition.

c. Test vent system – Insofar as is practical, close all building doors and windows and all doors between the space in which the appliances remaining connected to the common venting system are located and other spaces of the building. Turn on clothes dryers and any appliance not connected to the common venting system. Turn on any exhaust fans, such as range hoods and bathroom exhausts, so they will operate at maximum speed. Do not operate a summer exhaust fan. Close fireplace dampers.

d. Place in operation the appliance being inspected. Follow the lighting instructions. Adjust thermostat so appliance will operate continuously.

e. Test for spillage at the draft hood relief opening after 5 minutes of main burner operation. Use the flame of a match or candle, or smoke from a cigarette, cigar, or pipe.

f. After it has been determined that each appliance remaining connected to the common venting system properly vents when tested as outlined herein, return doors, windows, exhaust fans, fireplace dampers, and any other gas-burning appliance to their previous conditions of use.

g. Any improper operation of the common venting system should be corrected so the installation conforms with the National Fuel Gas Code, ANSI Z223.1/NFPA 54 and/or CAN/CSA B149.1, Natural Gas and Propane Installation Code. When resizing any portion of the common venting system, the common venting system should be resized to approach the minimum size as determined using the appropriate tables in Part 11 of the National Fuel Gas Code, ANSI Z223.1/NFPA and/or CAN/CSA B149.1, Natural Gas and Propane Installation Code.

2 Prepare boiler

Remove boiler from wood pallet

1. After removing the outer shipping carton from the boiler, remove the parts box.

2. To remove the boiler from the pallet remove the four (4) lag bolts located at the front and rear of the boiler (FIG. 2-1).

NOTICE Do not drop the boiler or bump the jacket on the floor or pallet. Damage to the boiler can result.

Figure 2-1 *Boiler Mounted on Shipping Pallet*

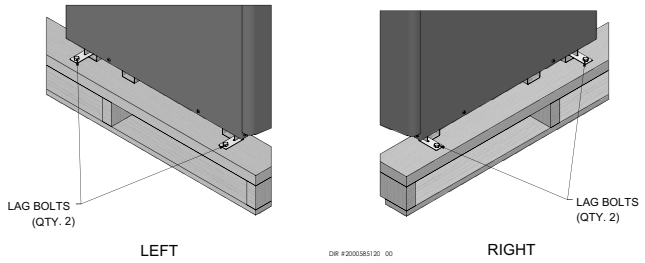

Gas conversions

⚠ WARNING For a boiler already installed, you must turn off gas supply, turn off power and allow boiler to cool before proceeding. You must also completely test the boiler after conversion to verify performance as described under Start-up, Section 10 of this manual. Failure to comply could result in severe personal injury, death, or substantial property damage.

⚠ DANGER Inspect the O-ring when the blower is disassembled. The O-ring must be in good condition and must be installed. Failure to comply will cause a gas leak, resulting in severe personal injury or death.

Models 400-1000 (Venturi)

1. Remove the front access panel from the unit (no tools required for removal).

2. **For Models 400-500:** Disconnect the air inlet piping from the venturi by loosening the band clamp around the rubber boot coupling. Slide the rubber boot off of the venturi.
   For Models 650-1000: Disconnect the venturi from the air box by removing the four (4) bolts securing it to the air box.

3. **For Models 400-500:** Disconnect the gas piping from the venturi by loosening the threaded nut on the venturi. Replace gasket if damaged.
   For Models 650-1000: Disconnect the gas piping from the venturi by removing the four (4) bolts securing the pipe to the venturi.

4. Remove the bolts connecting the venturi to the fan. Remove the natural venturi from the unit (FIG.'s 2-2A and 2-2B).

5. Install the LP venturi onto the fan taking note of the following:
   a. The UP arrow on the plastic housing is indeed pointing up.
   b. The connection for the gas piping is facing towards the top of the unit. Reinstall the bolts connecting the venturi to the fan.

6. Reassemble the gas pipe to the venturi. Install the new gasket provided in the kit and ensure it is seated properly before tightening.

7. **For Models 400-500:** Reconnect the rubber boot on the air inlet to the venturi inlet and tighten the band clamp at this connection.
   For Models 650-1000: Reinstall the four (4)bolts connecting the venturi to the air box and tighten.

8. After installation is complete, attach the propane conversion label (in the conversion kit) next to the boiler rating plate. Attach the LP caution label (in the conversion kit) to the rear of the boiler underneath the gas supply piping.

Figure 2-2A *Installing Propane Orifice - Models 400-500*

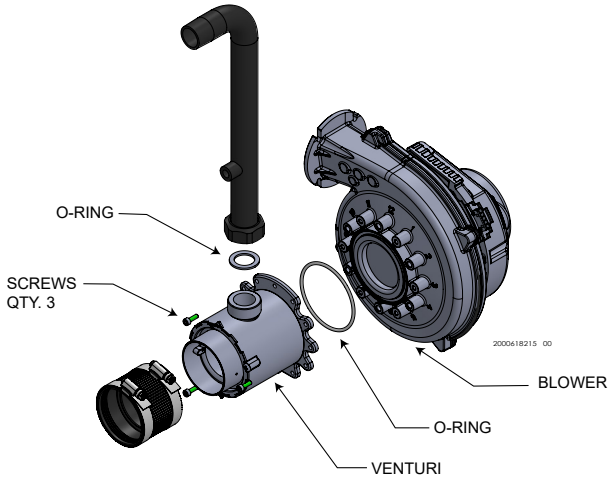

Figure 2-2B *Installing Propane Orifice - Models 650-1000*

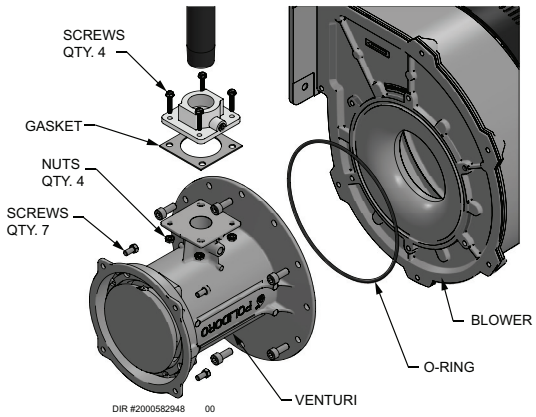

2 Prepare boiler

10. **For Models 400-500:** Remove the front panel from the unit (no tools required for removal).

    For Models 650-1000: Remove the top access cover from the unit (no tools required for removal).

11. Use a combustion analyzer to verify CO_2 is within the range of 9.4 – 10.4%. If not, adjust the screw **clockwise** incrementally to raise CO_2 and **counterclockwise** to lower CO_2 (FIG. 2-3 and 2-4).

12. Replace the front access panel removed in Step 1 and resume operation.

⚠ WARNING After converting to LP, check combustion per the Start-up procedure in Section 11 of this manual. Failure to check and verify combustion could result in severe personal injury, death, or substantial property damage.

Figure 2-3 *Gas Valve Adjustment - Models 400-500 Series 100 - 101*

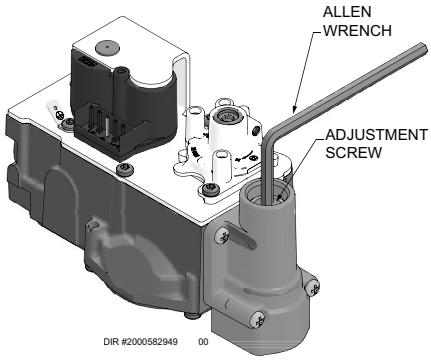

Figure 2-4 *Gas Valve Adjustment - Models 650 - 1000 Series 110 - 111*

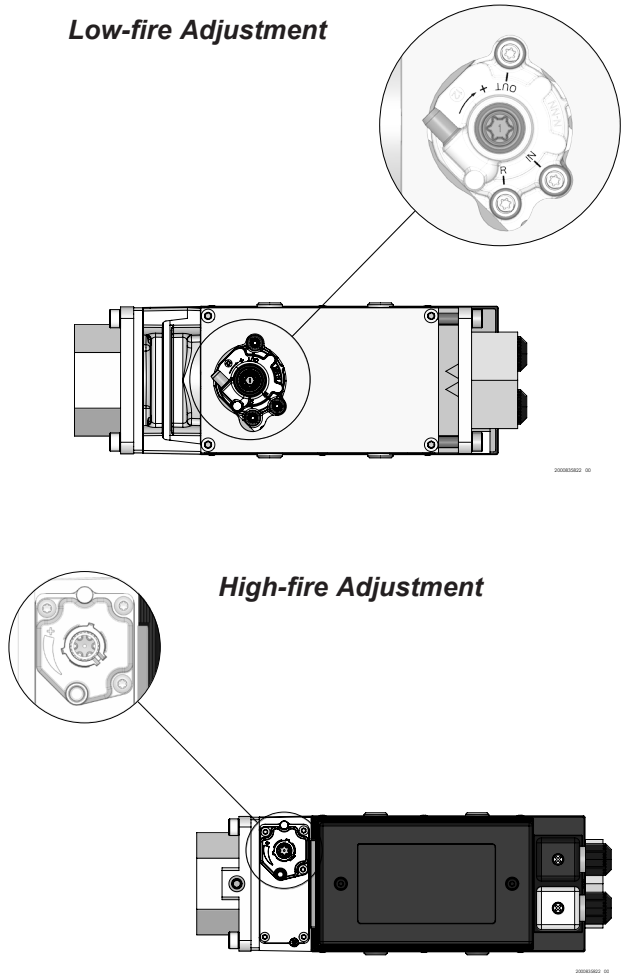

Combustion air filter

This unit has a standard air filter located at the combustion air inlet. This air filter is provided to help ensure clean air is used for the combustion process. Check this filter every month and replace when it becomes dirty. You can find these commercially available filters at any home center or HVAC supply store.

Filters by model sizes:

KBX0400-1000 / 12 x 12 x 1 filter

Note: Replacement filter should have a MERV rating no greater than 4.

Follow the steps below when replacing the combustion air filter:

1. Locate the combustion air filter box.
2. Lift and remove the air filter box cover to gain access to the air filter.
3. Slide the air filter out the top of the air filter box.
4. Inspect the air filter for dirt and debris, replace if necessary.
5. Replace the air filter and the air filter box cover.

3 General venting

Direct venting options - Sidewall Vent

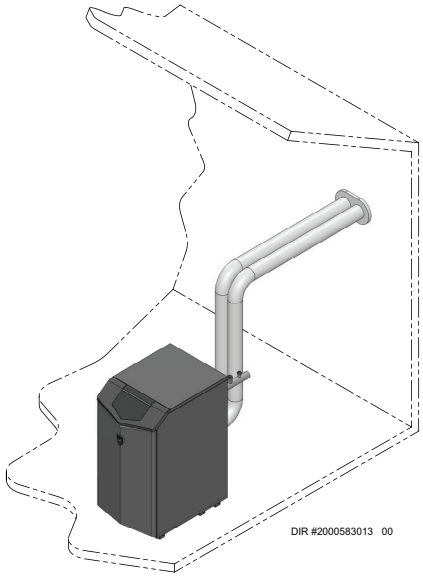

Two Pipe Sidewall

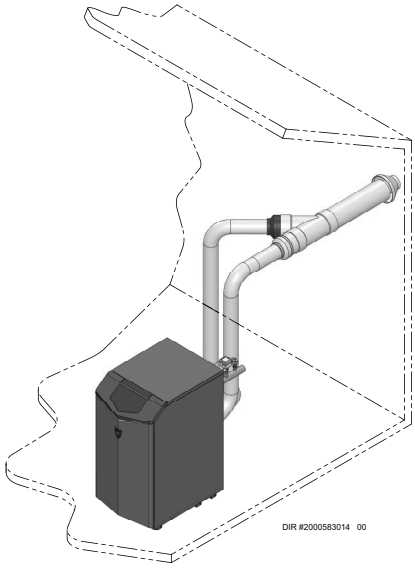

PVC/CPVC Concentric Sidewall
Models 400 - 500 Only

Direct venting options - Vertical Vent

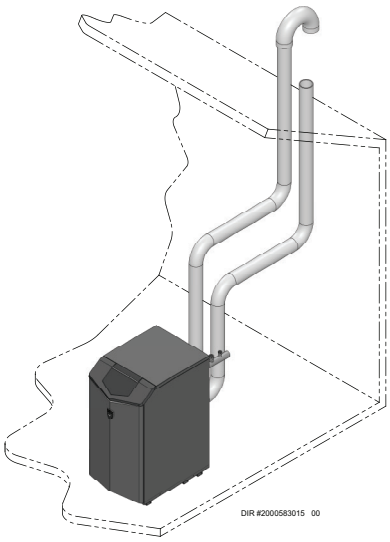

Two Pipe Vertical

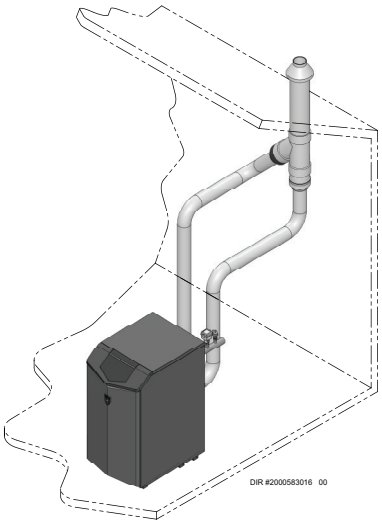

PVC/CPVC
Concentric Vertical
Models 400 - 500 Only

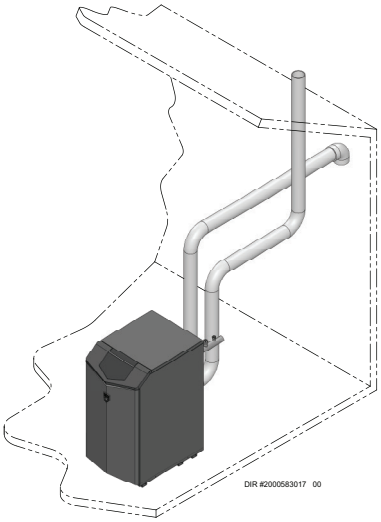

Vertical Vent, Sidewall Air

3 General venting

Install vent and combustion air piping

⚠ DANGER The Knight XL boiler must be vented and supplied with combustion and ventilation air as described in this section. Ensure the vent and air piping and the combustion air supply comply with these instructions regarding vent system, air system, and combustion air quality. See also Section 1 of this manual.

Inspect finished vent and air piping thoroughly to ensure all are airtight and comply with the instructions provided and with all requirements of applicable codes.

Failure to provide a properly installed vent and air system will cause severe personal injury or death.

⚠ WARNING This appliance requires a special venting system. Use only approved stainless steel, PVC, CPVC or polypropylene pipe and fittings listed in Tables 3H, 3I, and 3J for vent pipe, and fittings. Failure to comply could result in severe personal injury, death, or substantial property damage.

⚠ WARNING DO NOT mix components from different systems. The vent system could fail, causing leakage of flue products into the living space. Mixing of venting materials will void the warranty and certification of the appliance.

NOTICE Installation must comply with local requirements and with the National Fuel Gas Code, ANSI Z223.1 for U.S. installations or CSA B149.1 for Canadian installations.

⚠ WARNING For closet and alcove installations, CPVC, polypropylene or stainless steel material MUST BE used in a closet/alcove structure. Failure to follow this warning could result in fire, personal injury, or death.

⚠ CAUTION Improper installation of venting systems may result in injury or death.

NOTICE Follow the instructions in Section 1 of this manual when removing a boiler from an existing vent system.

The Knight XL boiler vent and air piping can be installed through the roof or through a sidewall. Follow the procedures in this manual for the method chosen. Refer to the information in this manual to determine acceptable vent and air piping length.

You may use any of the vent/air piping methods covered in this manual. Do not attempt to install the Knight XL boiler using any other means.

You must also install air piping from outside to the boiler air intake adapter unless following the Optional Room Air instructions in this manual. The resultant installation is direct vent (sealed combustion).

Air intake/vent connections

1. **Combustion Air Intake Connector** (FIG. 3-1) - Used to provide combustion air directly to the unit from outdoors. A fitting is provided on the unit for final connection. Combustion air piping must be supported per guidelines listed in the National Mechanical Code, Section 305, Table 305.4 or as local codes dictate.
2. **Vent Connector** (FIG.'s 3-2 thru 3-5) - Used to provide a passageway for conveying combustion gases to the outside. A transition fitting is provided on the unit for final connection. Vent piping must be supported per the National Building Code, Section 305, Table 305.4 or as local codes dictate.

Figure 3-1 *Near Boiler Air Piping*

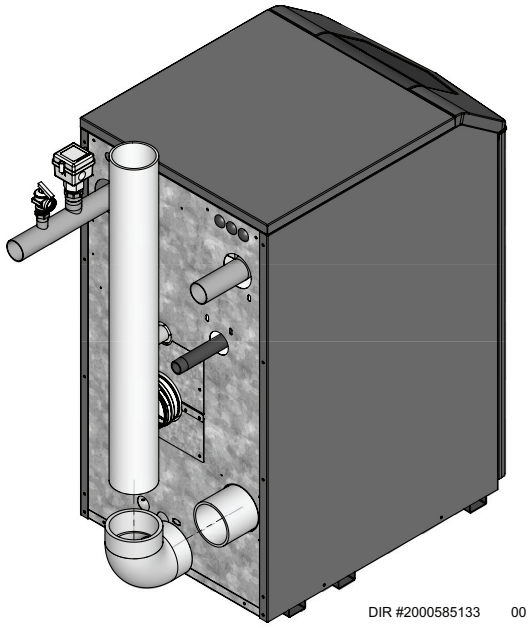

3 General venting *(continued)*

Requirements for installation in Canada

1. Installations must be made with a vent pipe system certified to ULC-S636.
2. The first three (3) feet of plastic vent pipe from the appliance flue outlet must be readily accessible for visual inspection.
3. The components of the certified vent system must not be interchanged with other vent systems or unlisted pipe/fittings. For concentric vent installations, the inner vent tube must be replaced with field supplied certified vent material to comply with this requirement.
4. The 4" Concentric Vent Kit available from Lochinvar (see Section 4 – *Sidewall Termination – Optional Concentric Vent*) and the 4" Concentric Vent Kit available from IPEX are both approved for use on the Knight XL (400 - 500 models only) boiler. Both kits are listed to the ULC-S636 standard for use in Canada.

Sizing

The Knight XL uses model specific combustion air intake and vent piping sizes as detailed in Table 3A below.

Table 3A *Air Intake/Vent Piping Sizes*

Model	Air Intake	Vent
400 - 500	4 inches (102 mm)	4 inches (102 mm)
650 - 800	4 inches (102 mm)	6 inches (152 mm)
1000	6 inches (152 mm)	6 inches (152 mm)

NOTICE Increasing or decreasing combustion air or vent piping sizes is not authorized.

Table 3B *Concentric Vent Kit Equivalent Vent Lengths*

Model	Kit Number	Equivalent Vent Length
400	100140484	30 Feet (9 m)
500	100140484	30 Feet (9 m)

Minimum / Maximum allowable combustion air and vent piping lengths are as follows:

Combustion Air = 12 equivalent feet (3.7 m) minimum / 150 equivalent feet (30.5 m) maximum

Vent = 12 equivalent feet (3.7 m) minimum / 150 equivalent feet (30.5 m) maximum

When determining equivalent combustion air and vent length, add 5 feet (1.5m) for each 90° elbow and 3 feet (.9 m) for each 45° elbow.

EXAMPLE: 20 feet (6 m) of PVC pipe + (3) 90° elbows + (3) 45° elbows + (1) concentric vent kit (100140484) = 49 equivalent feet (15 m) of piping.

Table 3C *Room Air Minimum/Maximum Allowable Vent Lengths*

Model	Vent			Input De-Rate per 25 Feet of Vent
	Vent Diameter	Vent Min. Length	Vent Max. Length	
400	4"	12'	150'	0.56%
500	4"	12'	150'	0.50%
650N*	4"	12'	80'	0.30%
650L*	4"	12'	30'	0.82%
650	6"	12'	150'	0.10%
800	6"	12'	150'	0.50%
1000	6"	12'	150'	0.66%

*When using 4" vent for the 650 model, the allowable vent length for propane models is different from the allowable vent length for natural gas models.

Table 3D *Direct Vent Minimum/Maximum Allowable Air/Vent Lengths*

Model	Air Inlet			Vent			Input De-Rate per 25 Feet of Vent
	Air Intake Diameter	Air Intake Min. Length	Air Intake Max. Length	Vent Diameter	Vent Min. Length	Vent Max. Length	
400	4"	12'	150'	4"	12'	150'	0.78%
500	4"	12'	150'	4"	12'	150'	0.83%
650N*	4"	12'	80'	4"	12'	80'	0.29%
650L*	4"	12'	30'	4"	12'	30'	0.81%
650	4"	12'	150'	6"	12'	150'	2.00%
650	6"	12'	150'	6"	12'	150'	0.60%
800	4"	12'	100'	6"	12'	100'	0.63%
800	6"	12'	150'	6"	12'	150'	0.38%
1000	6"	12'	150'	6"	12'	150'	1.00%

*When using 4" vent for the 650 model, the allowable vent length for propane models is different from the allowable vent length for natural gas models.

3 General venting

Air inlet pipe materials:

The air inlet pipe(s) must be sealed. Choose acceptable combustion air inlet pipe materials from the following list:

PVC, CPVC, Polypropylene or ABS
Dryer Vent or Sealed Flexible Duct (not recommended for rooftop air inlet)
Galvanized steel vent pipe with joints and seams sealed as specified in this section.
Type "B" double-wall vent with joints and seams sealed as specified in this section.
AL29-4C, stainless steel material to be sealed to specification of its manufacturer.

*Plastic pipe may require an adapter (not provided) to transition between the air inlet connection on the appliance and the plastic air inlet pipe.

⚠ WARNING Using air intake materials other than those specified can result in personal injury, death or property damage.

NOTICE The use of double-wall vent or insulated material for the combustion air inlet pipe is recommended in cold climates to prevent the condensation of airborne moisture in the incoming combustion air.

Sealing of Type "B" double-wall vent material or galvanized vent pipe material used for air inlet piping on a sidewall or vertical rooftop Combustion Air Supply System:

a. Seal all joints and seams of the air inlet pipe using either Aluminum Foil Duct Tape meeting UL Standard 723 or 181A-P or a high quality UL Listed silicone sealant such as those manufactured by Dow Corning or General Electric.
b. Do not install seams of vent pipe on the bottom of horizontal runs.
c. Secure all joints with a minimum of three (3) sheet metal screws or pop rivets. Apply Aluminum Foil Duct Tape or silicone sealant to all screws or rivets installed in the vent pipe.
d. Ensure that the air inlet pipes are properly supported.

The PVC, CPVC, or ABS air inlet pipe should be cleaned and sealed with the pipe manufacturer's recommended solvents and standard commercial pipe cement for the material used. The PVC, CPVC, ABS, Dryer Vent or Flex Duct air inlet pipe should use a silicone sealant to ensure a proper seal at the appliance connection and the air inlet cap connection. Dryer vent or flex duct should use a screw type clamp to seal the vent to the appliance air inlet and the air inlet cap. Proper sealing of the air inlet pipe ensures that combustion air will be free of contaminants and supplied in proper volume.

Follow the polypropylene manufacturer's instructions when using polypropylene material as an inlet pipe.

When a sidewall or vertical rooftop combustion air supply system is disconnected for any reason, the air inlet pipe must be resealed to ensure that combustion air will be free of contaminants and supplied in proper volume.

⚠ DANGER Failure to properly seal all joints and seams as required in the air inlet piping may result in flue gas recirculation, spillage of flue products and carbon monoxide emissions causing severe personal injury or death.

Common venting

Knight XL boilers may be common vented; however, the following criteria MUST BE followed:

1. Only Knight XL boilers may be connected to the common vent. DO NOT mix other manufacturer's appliances or other Lochinvar models.
2. Knight XL boilers connected to the common vent must all be of the same size.
3. Each Knight XL boiler must have a Lochinvar supplied flue damper installed (see Table 3E).
4. A condensate drain must be installed above the flue damper.
5. Only vertical direct vent, positive pressure, Category IV or vertical/chimney vent, negative pressure, Category II may be used when common venting Knight XL boilers. Sidewall common venting is not allowed.
6. Knight XL boilers in a common vent must be connected and controlled with the integral Knight XL SMART TOUCH Cascade.
   a. The leader may be controlled through the Knight XL SMART TOUCH control through BMS (external 0-10V signal), ModBus, BACnet, or its own internally calculated set point.
   b. The Cascade (Members) must be controlled by the Knight XL Leader water heater using the Lead/Lag Cascade option.

For approved common vent sizing, contact the factory.

Knight XL boilers cannot be connected using a common air system.

⚠ WARNING When Knight XL boilers are common vented, the criteria above MUST BE followed. Failure to follow all these requirements will result in severe personal injury, death, or substantial property damage.

⚠ WARNING When Knight XL boilers are common vented, hot water generators must be piped to the primary heating loop and tank thermostats must not be connected to the Knight XL.

NOTICE A field supplied inline condensate collection section MUST BE installed directly above the backflow preventer.

***Table 3E** Flue damper kits*

Flue Damper Kits		
Model	**Damper Size**	**Kit Number**
400	4"	100056141
500	4"	100056141
650	6"	100056142
800	6"	100056142
1000	6"	100056142

3 General venting *(continued)*

Common venting CAT II:

Flues of multiple appliances may be combined by incorporating a vent increaser to change the Category IV appliance to a Category II vent system which can be common vented using an engineered vent system. An increaser must be used and the combined engineered vent system must be designed to ensure that flue products will be properly exhausted from the building at all times. **Failure to use the correct vent increaser or a properly sized vent system may result in a hazardous condition where flue gases spill into an occupied living space.** Consult a vent designer to determine the diameter of the common vent pipe required for combined vent installation. It is recommended that all vent joints and seams are sealed gastight. This vent system has specific vent material and installation requirements. The negative draft in a conventional vent installation must be within the range of 0.02 to 0.08 inches w.c. to ensure proper operation. Make all draft readings while the unit is in stable operation (approximately 2 to 5 minutes).

Table 3F *Category IV to Category II Conversion Chart*

Model	Category IV Standard Vent Size	Category II Increaser Size	Maximum Vent Length
400	4"	6"	150'
500	4"	6"	150'
650	6"	8"	150'
800	6"	8"	150'
1000	6"	8"	150'

Optional room air

NOTICE Optional room air is intended for commercial applications. Combustion air piping to the outside is recommended for residential applications.

Commercial applications utilizing the Knight XL boiler may be installed with a single pipe carrying the flue products to the outside while using combustion air from the equipment room. In order to use the room air venting option the following conditions and considerations must be followed.

- The unit MUST be installed with the appropriate room air kit (Table 3G).
- The equipment room MUST be provided with properly sized openings to assure adequate combustion air. Please refer to instructions provided with the room air kit.
- There will be a noticeable increase in the noise level during normal operation from the inlet air opening.
- Using the room air kit makes the unit vulnerable to combustion air contamination from within the building. Please review Section 1, Prevent Combustion Air Contamination, to ensure proper installation.
- Vent system and terminations must comply with the standard venting instructions set forth in this manual.

⚠ WARNING When utilizing the single pipe method, provisions for combustion and ventilation air must be in accordance with Air for Combustion and Ventilation, of the latest edition of the National Fuel Gas Code, ANSI Z223.1, in Canada, the latest edition of CGA Standard B149 Installation Code for Gas Burning Appliances and Equipment, or applicable provisions of the local building codes.

Table 3G *Optional Room Air Kit*

Model	Kit Number	Description
400 - 800	100157616	Room Air Kit
1000	100344020	Room Air Kit

Air contamination

Pool and laundry products and common household and hobby products often contain fluorine or chlorine compounds. When these chemicals pass through the boiler, they can form strong acids. The acid can eat through the boiler wall, causing serious damage and presenting a possible threat of flue gas spillage or boiler water leakage into the building.

Please read the information given in Table 1A listing contaminants and areas likely to contain them. If contaminating chemicals will be present near the location of the boiler combustion air inlet, have your installer pipe the boiler combustion air and vent to another location, per this manual.

⚠ WARNING If the boiler combustion air inlet is located in a laundry room or pool facility, for example, these areas will always contain hazardous contaminants.

⚠ WARNING To prevent the potential of severe personal injury or death, check for areas and products listed in Table 1A before installing the boiler or air inlet piping.

If contaminants are found, you MUST:

- Remove contaminants permanently.

—OR—

- Relocate air inlet and vent terminations to other areas.

PVC/CPVC

This product has been approved for use with the PVC/CPVC vent materials listed in Table 3H.

Installing vent and air piping

⚠ WARNING The vent connection to the appliance must be made with the CPVC pipe section if PVC/CPVC vent is to be used. The field provided vent fittings must be cemented to the CPVC pipe section using an "All Purpose Cement" suitable for PVC and CPVC pipe. Use only the vent materials, primer, and cement specified in Table 3H to make the vent connections. Failure to follow this warning could result in fire, personal injury, or death.

NOTICE Use only cleaners, primers, and solvents that are approved for the materials which are joined together.

NOTICE All PVC vent pipes must be glued, properly supported, and the exhaust must be pitched a minimum of a 1/4 inch per foot back to the boiler (to allow drainage of condensate).

⚠ WARNING Insulation should not be used on PVC or CPVC venting materials. The use of insulation will cause increased vent wall temperatures, which could result in vent pipe failure.

3 General venting

Table 3H PVC/CPVC Vent Pipe and Fittings

Approved PVC/CPVC Vent Pipe and Fittings		
Item	**Material**	**Standard**
Vent pipe	PVC Schedule 40, 80	ANSI/ASTM D1785
	PVC - DWV	ANSI/ASTM D2665
	CPVC Schedule 40, 80	ANSI/ASTM F441
Vent fittings	PVC Schedule 40	ANSI/ASTM D2466
	PVC Schedule 80	ANSI/ASTM D2467
	CPVC Schedule 80	ANSI/ASTM F439
	PVC - DWV	ANSI/ASTM D2665
Pipe Cement / Primer	PVC	ANSI/ASTM D2564
	CPVC	ANSI/ASTM F493
NOTICE: DO NOT USE CELLULAR (FOAM) CORE PIPE		

NOTE: In Canada, CPVC and PVC vent pipe, fittings and cement/primer must be ULC-S636 certified.

1. Work from the boiler to vent or air termination. Do not exceed the lengths given in this manual for the air or vent piping.
2. Cut pipe to the required lengths and deburr the inside and outside of the pipe ends.
3. Chamfer outside of each pipe end to ensure even cement distribution when joining.
4. Clean all pipe ends and fittings using a clean dry rag. (Moisture will retard curing and dirt or grease will prevent adhesion.)
5. Dry fit vent or air piping to ensure proper fit up before assembling any joint. The pipe should go a third to two-thirds into the fitting to ensure proper sealing after cement is applied.
6. Priming and Cementing:
   a. Handle fittings and pipes carefully to prevent contamination of surfaces.
   b. Apply a liberal even coat of primer to the fitting socket and to the pipe end to approximately 1/2" beyond the socket depth.
   c. Apply a second primer coat to the fitting socket.
   d. While primer is still wet, apply an even coat of approved cement to the pipe equal to the depth of the fitting socket along with an even coat of approved cement to the fitting socket.
   e. Apply a second coat of cement to the pipe.
   f. While the cement is still wet, insert the pipe into the fitting, if possible twist the pipe a 1/4 turn as you insert it. **NOTE:** If voids are present, sufficient cement was not applied and joint could be defective.
   g. Wipe excess cement from the joint removing ring or beads as it will needlessly soften the pipe.

Figure 3-2 *Near Boiler PVC/CPVC Venting - Models 400 - 1000*

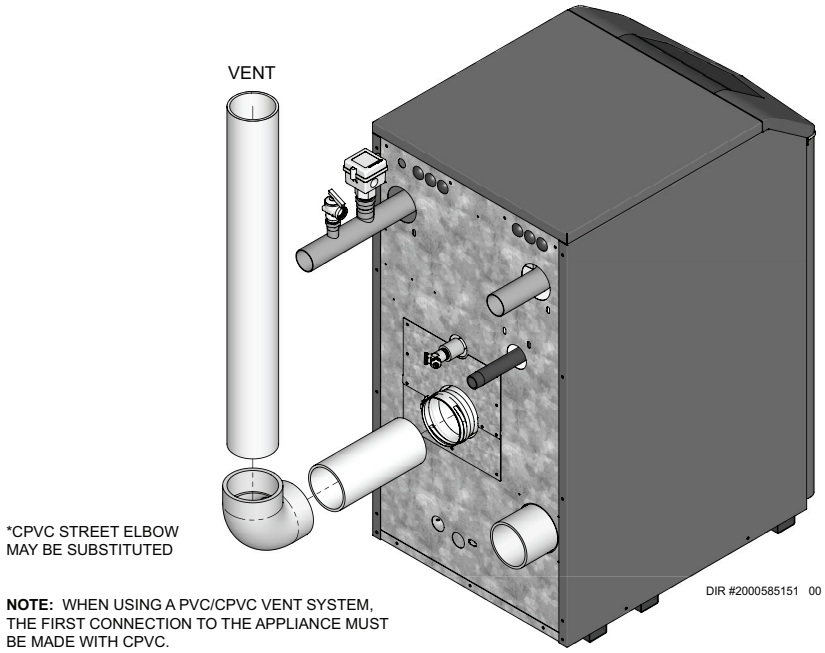

3 General venting *(continued)*

Polypropylene

This product has been approved for use with polypropylene vent with the manufacturers listed in Table 3H.

All terminations must comply with listed options in this manual and be a single-wall vent offering.

For support and special connections required, see the manufacturer's instructions. All vent is to conform to standard diameter and equivalent length requirements established.

When determining equivalent combustion air and vent length for polypropylene single-wall piping:

- 1 foot of Duravent 4 inch single-wall pipe is equivalent to 1 foot of piping

Flexible polypropylene

For use of flex pipe, it is recommended to have the vent material in 32°F or higher ambient space before bending at installation. No bends should be made to greater than 45° and ONLY installed in vertical or near vertical installations (FIG. 3-3).

NOTICE The installer must use a specific vent starter adapter at the flue collar connection. The adapter is supplied by the vent manufacturer to adapt to its vent system. See Table 3H for approved vent adapters. Discard CPVC starter piece.

NOTICE All vent connections MUST be secured by the vent manufacturer's joint connector (FIG. 3-4).

⚠ WARNING Insulation should not be used on polypropylene venting materials. The use of insulation will cause increased vent wall temperatures, which could result in vent pipe failure.

⚠ WARNING Use only the adapters and vent system listed in Tables 3H and 3I. DO NOT mix vent systems of different types or manufacturers. Failure to comply could result in severe personal injury, death, or substantial property damage.

NOTICE Installations must comply with applicable national, state, and local codes. For Canadian installation, polypropylene vent must be listed as a ULC-S636 approved system.

***Table 3I** Polypropylene Vent Pipe and Fittings*

Approved Polypropylene Vent Manufacturers	
Make	**Model**
Centrotherm Eco Systems	InnoFlue SW/Flex
Duravent (M & G Group)	PolyPro Single-Wall / PolyPro Flex

NOTICE Installation of a polypropylene vent system should adhere to the vent manufacturer's installation instructions supplied with the vent system.

***Figure 3-3** Near Boiler Flexible Polypropylene Venting*

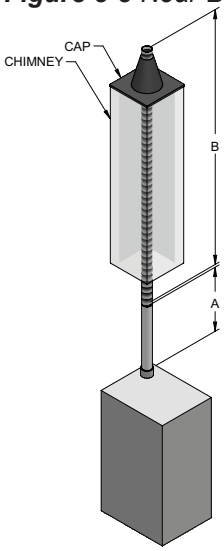

Duravent 3"

"A" DIM	"B" DIM	
3" RIGID	3" FLEX	4" FLEX
10 FT	60 FT	90 FT
20 FT	53 FT	80 FT
30 FT	47 FT	70 FT
40 FT	40 FT	60 FT
50 FT	33 FT	50 FT
60 FT	27 FT	40 FT
70 FT	20 FT	30 FT
80 FT	13 FT	20 FT
90 FT	7 FT	10 FT

Duravent 4"

"A" DIM	"B" DIM	
4" RIGID	4" FLEX	5" FLEX
10 FT	30 FT	90 FT
20 FT	27 FT	80 FT
30 FT	23 FT	70 FT
40 FT	20 FT	60 FT
50 FT	17 FT	50 FT
60 FT	13 FT	40 FT
70 FT	10 FT	30 FT
80 FT	7 FT	20 FT
90 FT	3 FT	10 FT

Centrotherm 3"

"A" DIM	"B" DIM	
3" RIGID	3" FLEX	4" FLEX
10 FT	45 FT	90 FT
20 FT	40 FT	80 FT
30 FT	35 FT	70 FT
40 FT	30 FT	60 FT
50 FT	25 FT	50 FT
60 FT	20 FT	40 FT
70 FT	15 FT	30 FT
80 FT	10 FT	20 FT
90 FT	5 FT	10 FT

Centrotherm 4"

"A" DIM	"B" DIM
4" RIGID	4" FLEX
10 FT	33 FT
20 FT	29 FT
30 FT	26 FT
40 FT	22 FT
50 FT	18 FT
60 FT	15 FT
70 FT	11 FT
80 FT	7 FT
90 FT	4 FT

*NOTES: 1) FLEX PIPE MAY ONLY BE RUN IN A VERTICAL ORIENTATION
2) ALL VENT LENGTHS REPRESENTED IN ABOVE CHARTS ARE EQUIVALENT LENGTHS.
3) SECTION A IS EQUIVALENT FEET OF RIGID PIPE, WHICH MAY INCLUDE 45 AND 90° ELBOWS. PLEASE SEE SIZING SECTION FOR DETERMINING EQUIVALENT FEET.

IMG00840

***Figure 3-4** Near Boiler Polypropylene Venting*

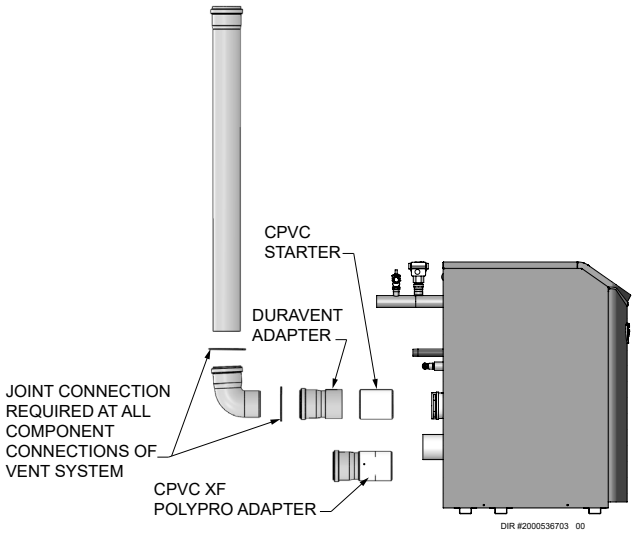

3 General venting

Table 3J Approved PolypropyleneTerminations

Model	Centrotherm InnoFlue SW					
	Polypropylene Adapter	Joint Connector	Sidewall Retaining Bracket*	Sidewall Adapter*	Low Profile Wall Termination	Concentric Wall Termination
400-500	ISAALE0404	IANS04	IATP0404	ISTAGL0404	ISLPT0404	ICWT462 & ICT0446
650-1000	ISAALE0606	Not Required	IATP0606	ISTAGL0606	ISLPT0606	ICWT610 & ICTC06610

Model	DuraVent Polypro			
	Polypropylene Adapter	Joint Connector	Sidewall Kit*	* These parts are only needed if the sidewall termination assembly is used (see FIG. 4-5B).
400-500	4PPS-AD-M	4PPS-LB	4PPS-HLK	
650-1000	6PPS-06PVCM-6PPF	Not Required	6PPS-HLK	

Stainless steel vent

This product has been approved for use with stainless steel using the manufacturers listed in Table 3K.

⚠ WARNING Use only the materials, vent systems, and terminations listed in Tables 3I and 3K. DO NOT mix vent systems of different types or manufacturers. Failure to comply could result in severe personal injury, death, or substantial property damage.

NOTICE The installer must use a specific vent starter adapter at the flue collar connection, supplied by the vent manufacturer to adapt to its vent system. See Table 3K for approved vent adapters. Discard CPVC starter piece.

NOTICE Installations must comply with applicable national, state, and local codes. Stainless steel vent systems must be listed as a UL-1738 approved system for the United States and a ULC-S636 approved system for Canada.

NOTICE Installation of a stainless steel vent system should adhere to the stainless steel vent manufacturer's installation instructions supplied with the vent system.

Figure 3-5 Near Boiler Stainless Steel Venting Models 400 - 1000

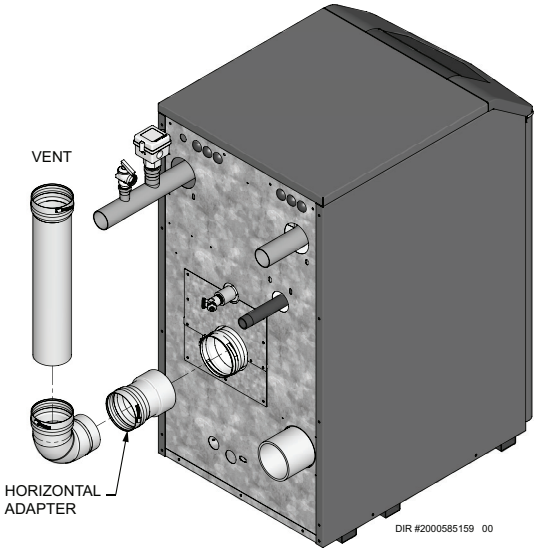

Table 3K Stainless Steel Vent Pipe and Fittings

Approved Stainless Steel Vent Manufacturers		
Make	Model	
Dura Vent (M & G Group)	FasNSeal Vent / FasNSeal Flex* Vent	*Use of FasNSeal Flex smooth inner wall vent is to be used in vertical or near vertical sections only, taking precaution to ensure no sagging occurs of the vent system. Connect to the FasNSeal rigid vent using specially designed adapters and sealing method, see manufacturer's instructions.
Z-Flex (Nova Flex Group)	Z-Vent	
Heat Fab (Selkirk Corporation)	Saf-T Vent	
Metal Fab	Corr/Guard	
Security Chimney	Secure Seal	
ICC	VIC	
Van Packer	--	
Enervex	Powervent	
Jeremias	--	

3 General venting

***Table 3L** Approved Stainless Steel Terminations and Adapters Continued*

Model	DuraVent			Heat Fab			Z Flex		
	FasNSeal			Saf-T Vent			Z-Vent		
	Boiler Adapter	Flue Termination	Intake Air Termination	Boiler Adapter	Flue Termination	Intake Air Termination	Boiler Adapter	Flue Termination	Intake Air Termination
400-500	FSA-4PVC-4FNS	FSBS4 FSRC4	FSAIH04	9401PVC	9492 5400CI	9414TERM	2SVSLA04	2SVSTP(F,X)04 2SVSRCX04	2SVSTEX0490
650-800	FSA-6PVC-6FNS	FSBS6 FSRC6	FSAIH04	9601PVC	9690 9692	9414TERM	2SVSTTA06	2SVSTPX06 2SVSRCX06	2SVSTEX0490
1000	FSA-6PVC-6FNS	FSBS6 FSRC6	FSAIH06	9601PVC	9690 9692	9614TERM	2SVSTTA06	2SVSTPX06 2SVSRCX06	2SVSEE0690 & 2SVSTPX06

Model	Metal Fab			Security Chimney			ICC		
	Corr/Guard			Secure Seal			VIC		
	Boiler Adapter	Flue Termination	Intake Air Termination	Boiler Adapter	Flue Termination	Intake Air Termination	Boiler Adapter	Flue Termination	Intake Air Termination
400-500	4CGPVCA	4CGSWHT 4CGSWC	4CGSW90LT	SS4PVCU	SS4STU SS4RCBU	SS4ST90AU	HO-04PA	HM-04MC HM-04SR	HE-04E90 HM-04SR
650-800	6FCGPVCA	6FCGSWMC 6FCGSWC	4CGSW90LT	SS6PVCU	SS6STU SS6RCBU	SS4ST90AU	HO-06PA	HM-06MC HM-06SR	HE-04E90 HM-04SR
1000	6FCGPVCA	6FCGSWMC 6FCGSWC	6FCGSW90L	SS6PVCU	SS6STU SS6RCBU	SS6ST90AU	HO-06PA	HM-06MC HM-06SR	HE-06E90 HM-06SR

Model	Enervex			Van Packer		
	Powervent					
	Boiler Adapter	Flue Termination	Intake Air Termination	Boiler Adapter	Flue Termination	Intake Air Termination
400-500	801.0676.4604	801.0679.1004	801.0676.4604	C04PVC04.38B/ C04PVC04.38B	M0490EB & M04SCTB	M0490EB & M04SCTB
650-800	801.0676.4606	801.0679.1006	801.0676.4604	C04PVC04.38B/ C06PVC06.50B	M0690EB & M06SCTB	M0490EB & M04SCTB
1000	801.0676.4606	801.0679.1006	801.0676.4606	C06PVC06.50B/ C06PVC06.50B	M0690EB & M06SCTB	M0690EB & M06SCTB

Model	Jeremias		
	Boiler Adapter	Flue Termination	Intake Air Termination
400-500	SWKL4-KLC	SWKL4-WRC	SWKL4-90ET
650-800	SWKL6-KLC	SWKL6-WRC	SWKL4-90ET
1000	SWKL6-KLC	SWKL6-WRC	SWKL6-90ET

4 Sidewall direct venting

Vent/air termination – sidewall

⚠ WARNING Follow instructions below when determining vent location to avoid possibility of severe personal injury, death, or substantial property damage.

⚠ WARNING A gas vent extending through an exterior wall shall not terminate adjacent to a wall or below building extensions such as eaves, parapets, balconies, or decks. Failure to comply could result in severe personal injury, death, or substantial property damage.

Determine location

Locate the vent/air terminations using the following guidelines:

1. The total length of piping for vent or air must not exceed the limits given in the General Venting Section of this manual.
2. You must consider the surroundings when terminating the vent and air:
   a. Position the vent termination where vapors will not damage nearby shrubs, plants or air conditioning equipment or be objectionable.
   b. The flue products will form a noticeable plume as they condense in cold air. Avoid areas where the plume could obstruct window views.
   c. Prevailing winds could cause freezing of condensate and water/ice buildup where flue products impinge on building surfaces or plants.
   d. Avoid possibility of accidental contact of flue products with people or pets.
   e. Do not locate the terminations where wind eddies could affect performance or cause recirculation, such as inside building corners, near adjacent buildings or surfaces, window wells, stairwells, alcoves, courtyards, or other recessed areas.

⚠ WARNING Sidewall vent and air inlet terminations must terminate in the same pressure zone.

   f. Do not terminate above any door or window. Condensate can freeze, causing ice formations.
   g. Locate or guard vent to prevent condensate damage to exterior finishes.

Figure 4-1A *PVC/CPVC/Polypropylene Sidewall Termination of Air and Vent*

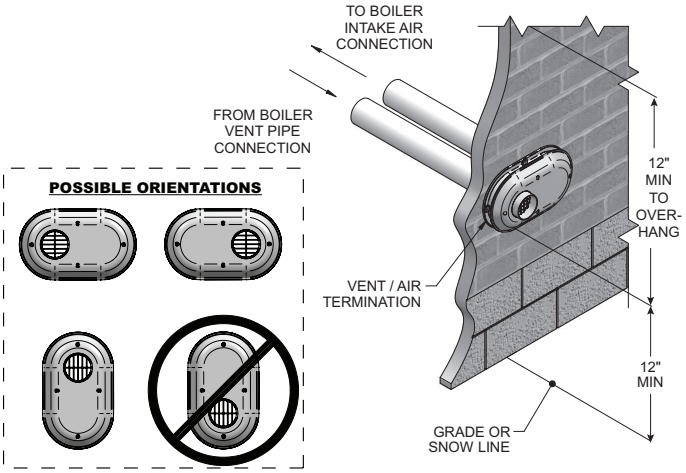

Table 4A *Sidewall Vent Kits*

Model	Kit Number	Air Intake	Vent Size
400 - 500	100157611	4"	4" vent
650 - 800	100157613	4"	6" vent
1000	100157612	6"	6" vent

If using the alternate sidewall termination:

3. The air piping must terminate in a down-turned elbow as shown in FIG. 4-1B. This arrangement avoids recirculation of flue products into the combustion air stream.
4. The vent piping must terminate in an elbow pointed outward or away from the air inlet, as shown in FIG. 4-1B.

⚠ WARNING Do not exceed the maximum lengths of the outside vent piping shown in FIG. 4-1B. Excessive length exposed to the outside could cause freezing of condensate in the vent pipe, resulting in potential boiler shutdown.

Figure 4-1B *Alternate PVC/CPVC/ Polypropylene Sidewall Termination of Air and Vent w/Field Supplied Fittings*

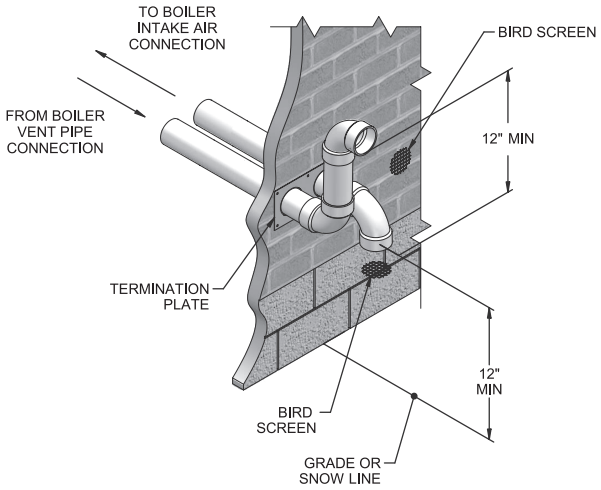

4 Sidewall direct venting

Vent/air termination – sidewall

Figure 4-2A *Alternate PVC/CPVC/ Polypropylene Sidewall Termination w/Field Supplied Fittings*

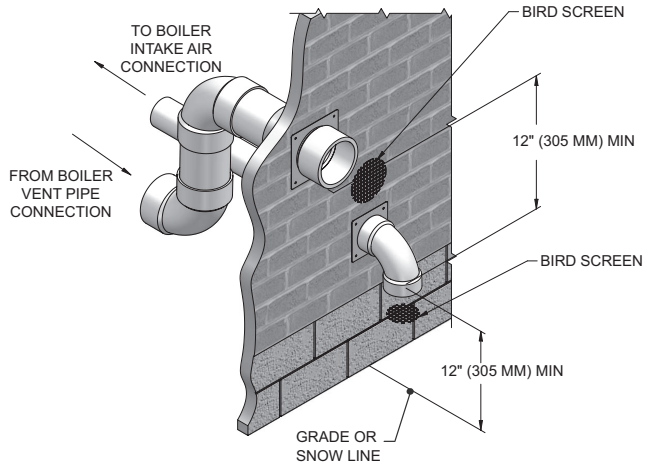

Figure 4-2B *Alternate Stainless Steel Sidewall Termination w/Field Supplied Fittings*

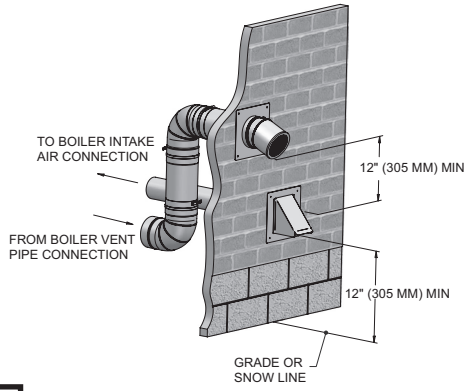

NOTICE PVC/CPVC or ABS is acceptable air inlet pipe material.

5. Maintain clearances as shown in FIG.'s 4-1A thru 4-4B. Also maintain the following:
   a. Vent must terminate:
      - At least 6 feet (1.8 m) from adjacent walls.
      - No closer than 12 inches (305 mm) below roof overhang.
      - At least 7 feet (2.1 m) above any public walkway.
      - At least 3 feet (.9 m) above any forced air intake within 10 feet (3 m).
      - No closer than 12 inches (305 mm) below or horizontally from any door or window or any other gravity air inlet.
   b. Air inlet must terminate at least 12 inches (305 mm) above grade or snow line; at least 12 inches (305 mm) below the vent termination (FIG. 4-1B); and the vent pipe must not extend more than 24 inches (610 mm) vertically outside the building.
   c. Do not terminate closer than 4 feet (1.2 m) horizontally from any electric meter, gas meter, regulator, relief valve, or other equipment. Never terminate above or below any of these within 4 feet (1.2 m) horizontally.
6. Locate terminations so they are not likely to be damaged by foreign objects, such as stones or balls, or subject to buildup of leaves or sediment.

Figure 4-3A *Clearance to Gravity Air Inlets*

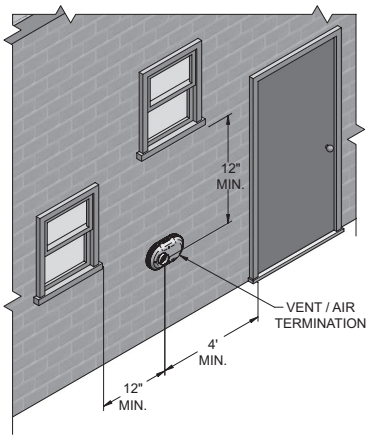

Figure 4-3B *Alternate Clearance to Gravity Air Inlets w/Field Supplied Fittings*

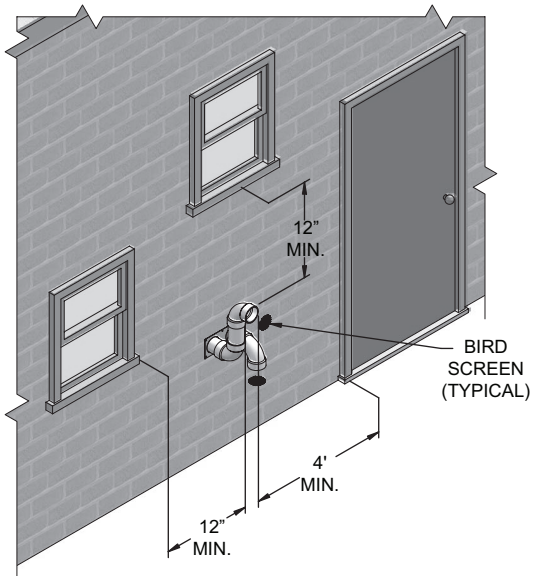

4 Sidewall direct venting *(continued)*

Vent/air termination – sidewall

***Figure 4-4A** Clearance to Forced Air Inlets*

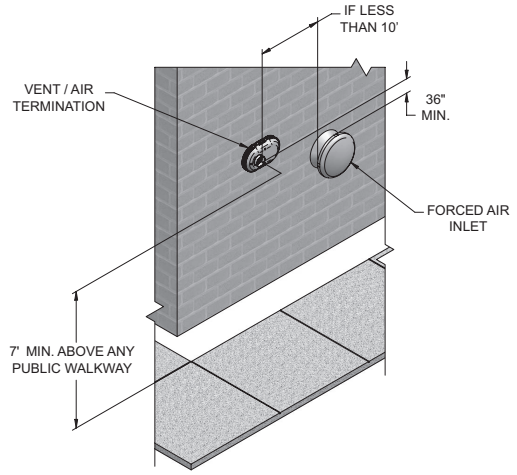

***Figure 4-4B** Alternate Clearance to Forced Air Inlets w/Field Supplied Fittings*

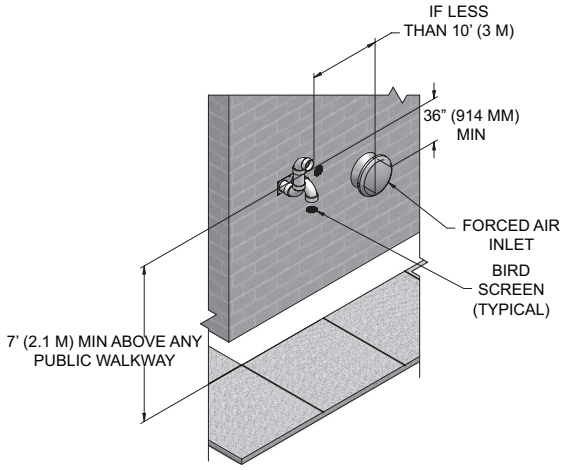

Prepare wall penetrations

1. Use the factory supplied wall plate as a template to locate the vent and air intake holes and mounting holes.

   Air pipe penetration:
   a. Cut a hole for the air pipe. Size the air pipe hole as close as desired to the air pipe outside diameter.

   Vent pipe penetration:
   a. Cut a hole for the vent pipe. For either combustible or noncombustible construction, size the vent pipe hole with at least a 1/2 inch clearance around the vent pipe outer diameter:
      - 5½ inch hole (140 mm) hole for 4 inch (102 mm) vent pipe
      - 7½ inch hole (191 mm) hole for 6 inch (152 mm) vent pipe

   Drill 3/16" diameter holes for inserting the plastic anchors into the wall.

2. For Polypropylene Only: Install the vent and air intake sidewall adapters from Table 3H into the vent plate. Slide the sidewall retaining bracket down the sidewall adapters flush to the vent plate (FIG. 4-4B).
3. For PVC/CPVC Only: Install the vent and air intake piping through the wall into the vent plate openings. Use RTV silicone sealant to seal the air pipe. Use the cement/primer listed in Table 3H to seal the vent pipe.
3. Mount and secure the vent plate to the wall using stainless steel screws.
5. Seal all gaps between the pipes and wall. Seal around the plate to the wall assuring no air gaps.
6. Assemble the vent cap to the vent plate (see FIG.'s 4-5A and 4-5B). Insert the stainless steel screws into the vent cap screw hole openings and securely attach the vent cap to the vent plate.
7. Seal all wall cavities.
8. PVC/CPVC terminations are designed to accommodate any wall thickness of standard constructions per the directions found in this manual.
9. Stainless steel terminations are designed to penetrate walls with a thickness up to 9.25 inches of standard construction.

***Figure 4-5A** PVC/CPVC Sidewall Termination Assembly*

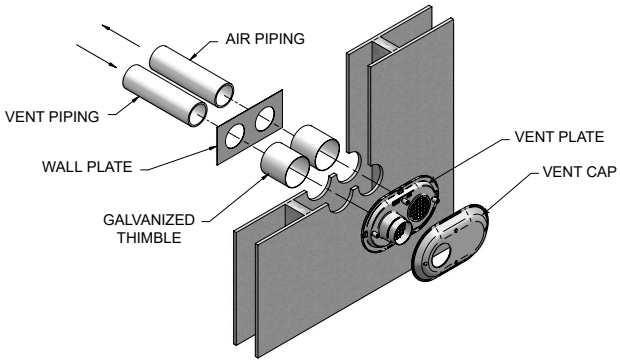

***Table 4B** Sidewall Vent Centerline Dimensions*

Model	Air	Vent
400 - 500	4"	4"
650 - 800	4"	6"
1000	6"	6"

4 Sidewall direct venting

***Figure 4-5B** Polypropylene Sidewall Termination Assembly*

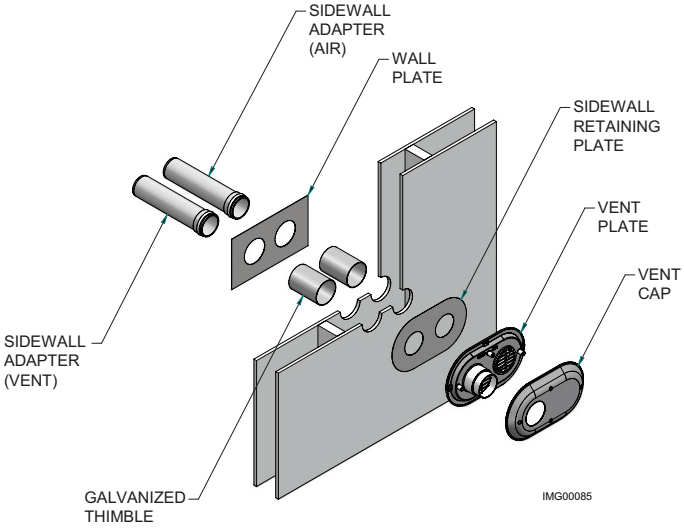

Prepare wall penetrations (Alternate - Field Supplied Option)

1. Air pipe penetration:
   a. Cut a hole for the air pipe. Size the air pipe hole as close as desired to the air pipe outside diameter.
2. Vent pipe penetration:
   a. Cut a hole for the vent pipe. For either combustible or noncombustible construction, size the vent pipe hole with at least a 1/2 inch clearance around the vent pipe outer diameter:
      - 5½ inch hole (140 mm) hole for 4 inch (102 mm) vent pipe
      - 7½ inch hole (191 mm) hole for 6 inch (152 mm) vent pipe
   b. Insert a galvanized metal thimble in the vent pipe hole as shown in FIG. 4-5C.
3. Use a sidewall termination plate as a template for correct location of hole centers.
4. Follow all local codes for isolation of vent pipe when passing through floors or walls.
5. Seal exterior openings thoroughly with exterior caulk.

***Figure 4-5C** A Typical Sidewall Termination Assembly - PVC/ CPVC/ Polypropylene or Stainless Steel*

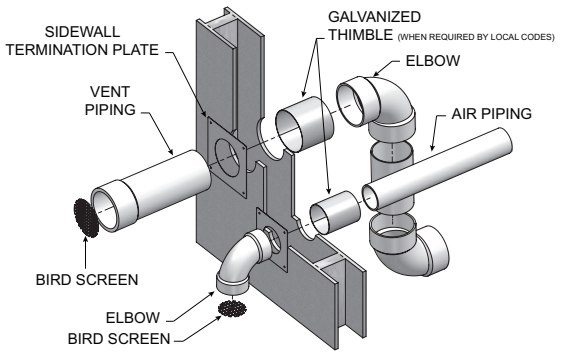

Multiple vent/air terminations

1. When terminating multiple Knight XL's terminate each vent/air connection as described in this manual (FIG. 4-6A).

⚠ WARNING All vent pipes and air inlets must terminate at the same height to avoid possibility of severe personal injury, death, or substantial property damage.

2. Place wall penetrations to obtain minimum clearance of 12 inches (305 mm) between vent pipe and adjacent air inlet elbow, as shown in FIG. 4-6A for U.S. installations. For Canadian installations, provide clearances required by CSA B149.1 Installation Code.
3. The air inlet of a Knight XL is part of a direct vent connection. It is not classified as a forced air intake with regard to spacing from adjacent boiler vents.

***Figure 4-6A** Multiple Vent Terminations (must also comply with **Figure 4-1A**)*

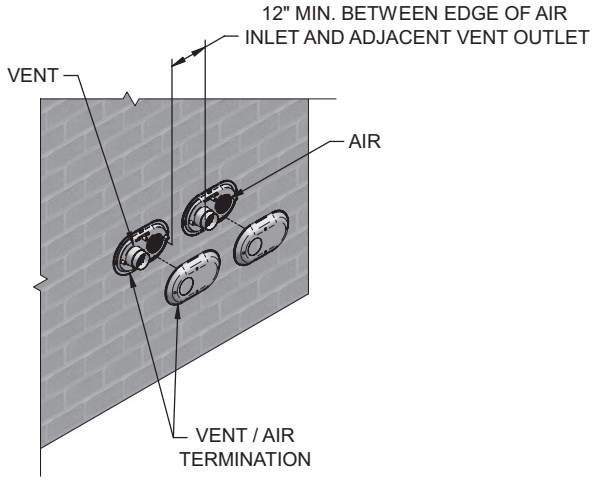

***Figure 4-6B** Alternate Multiple Vent Terminations w/Field Supplied Fittings (must also comply with **Figure 4-1B**)*

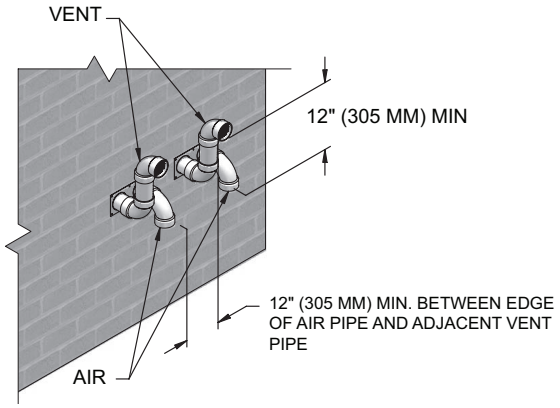

4 Sidewall direct venting *(continued)*

Sidewall termination – optional concentric vent: Models 400 - 500 Only

Description and usage

Lochinvar offers an optional concentric combustion air and vent pipe termination kit (#100140484 for 4" (102 mm) diameter - Models 400 - 500). Both combustion air and vent pipes must attach to the termination kit. The termination kit must terminate outside the structure and must be installed as shown below in FIG. 4-7.

The required combustion vent pipe materials are listed in Table 3H of this manual.

Figure 4-7 *Concentric Sidewall Termination*

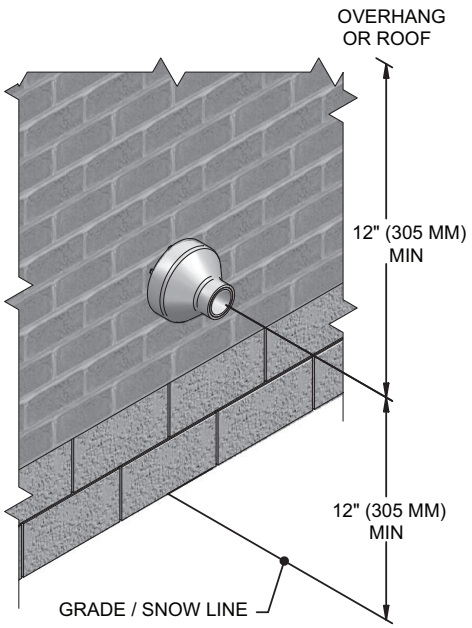

Sidewall termination installation

1. Determine the best location for the termination kit (see FIG. 4-7).
2. Reference the *Determine Location Section* of this manual for general termination considerations.
3. Cut one (1) hole 7 inch (178 mm) diameter for #100140484 installations into the structure to install the termination kit.
4. Partially assemble the concentric vent termination kit. Clean and cement using the procedures found in these instructions.
   a. Cement the Y concentric fitting to the larger kit pipe (FIG. 4-8).
   b. Cement the rain cap to the smaller diameter kit pipe (FIG. 4-8).

Figure 4-8 *Kit Contents_100140484 - Models 400 - 500*

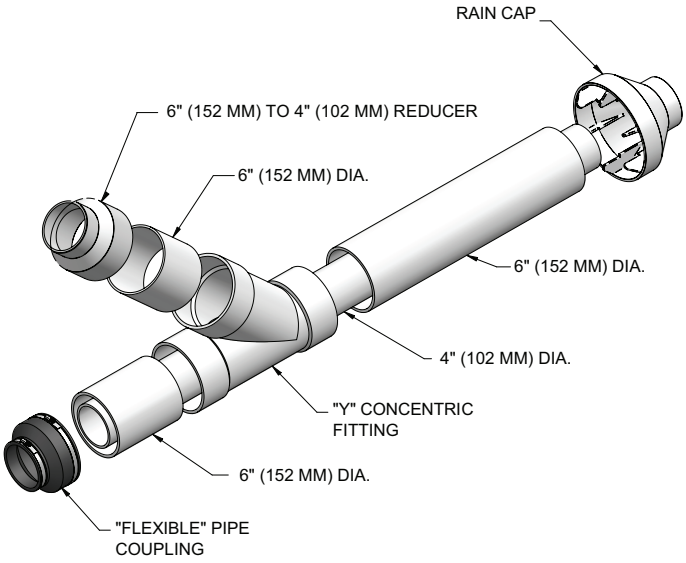

Table 4C *Alternate Centrotherm Concentric Vent Terminations*

Roof Terminations	
Size	**Part No.**
4"	ICRT4679
Wall Terminations	
Size	**Part No.**
4"	ICWT462

4 Sidewall direct venting

Sidewall termination – optional concentric vent: Models 400 - 500 Only

Figure 4-9 *Concentric Vent Dimensional Drawing - Models 400 - 500*

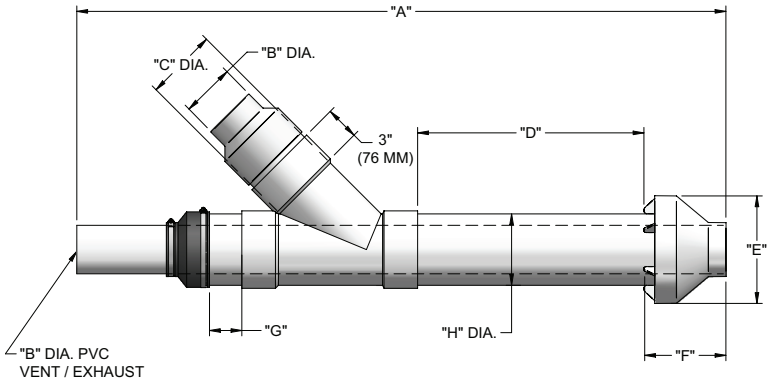

A	B	C	D	E	F	G	H
60" (1524 MM)	4" (102 MM)	6" (152 MM)	21 1/8" (537 MM)	10" (254 MM)	7 5/8" (194 MM)	3" (76 MM)	6 5/8" (168 MM)

NOTICE Instead of cementing the smaller pipe to the rain cap, a field-supplied stainless steel screw may be used to secure the two (2) components together when field disassembly is desired for cleaning (see FIG. 4-10).

⚠ WARNING When using the alternate screw assembly method, drill a clearance hole in the rain cap and a pilot hole in the vent pipe for the screw size being used. Failure to drill adequate holes may cause cracking of PVC components, allowing combustion products to be recirculated. Failure to follow this warning could result in personal injury or death.

⚠ WARNING Do not operate the appliance with the rain cap removed or recirculation of combustion products may occur. Water may also collect inside the larger combustion air pipe and flow to the burner enclosure. Failure to follow this warning could result in product damage or improper operation, personal injury, or death.

Figure 4-10 *Rain Cap to Vent Pipe Alternate Assembly*

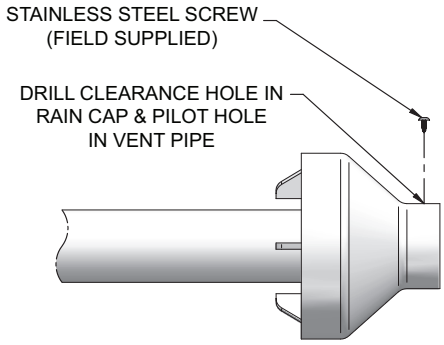

5. Install the Y concentric fitting and pipe assembly through the structure's hole from an inside wall.

NOTICE Do not allow insulation or other materials to accumulate inside the pipe assembly when installing through the hole.

6. Install the rain cap and small diameter pipe assembly into the Y concentric fitting and large pipe assembly from an outside wall. Ensure small diameter pipe is fastened tightly into the rubber adapter for #100140484 installations.

7. Secure the assembly to the structure as shown in FIG. 4-11 using field-supplied metal strapping or equivalent support material.

NOTICE Ensure termination location clearance dimensions are as shown in FIG. 4-7.

NOTICE If assembly needs to be extended to allow sidewall thickness requirement, the two (2) pipes supplied in the kit may be replaced by using the same diameter, field-supplied standard schedule 40 PVC. Do not extend dimension D* more than 60 inches (1524 mm) (see FIG. 4-9).

NOTICE If assembly depth needs to be reduced, dimension D can be as short as possible.

4 Sidewall direct venting *(continued)*

Sidewall termination – optional concentric vent: Models 400 - 500 Only

Figure 4-11 *Concentric Vent Sidewall Attachment*

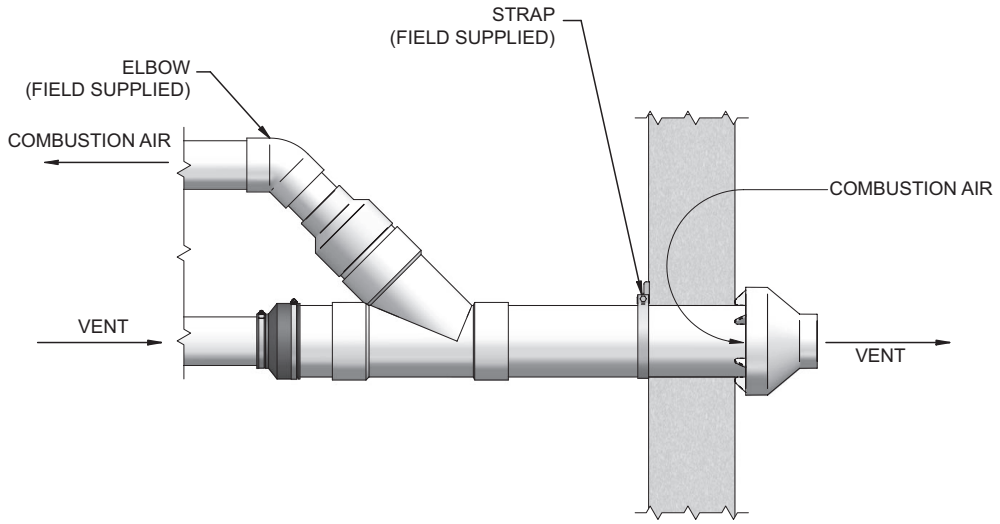

CAUTION DO NOT use field-supplied couplings to extend pipes. Airflow restriction will occur and may cause intermittent operation.

8. Cement appliance combustion air and vent pipes to the concentric vent termination assembly. See FIG. 4-11 for proper pipe attachment.

9. Operate the appliance one (1) heat cycle to ensure combustion air and vent pipes are properly connected to the concentric vent termination connections.

Multiventing sidewall terminations

When two (2) or more direct vent appliances are vented near each other, each appliance must be individually vented (see FIG. 4-12). NEVER common vent or breach vent this appliance. When two (2) or more direct vent appliances are vented near each other, two (2) vent terminations may be installed as shown in FIG. 4-12. It is important that vent terminations be made as shown to avoid recirculation of flue gases.

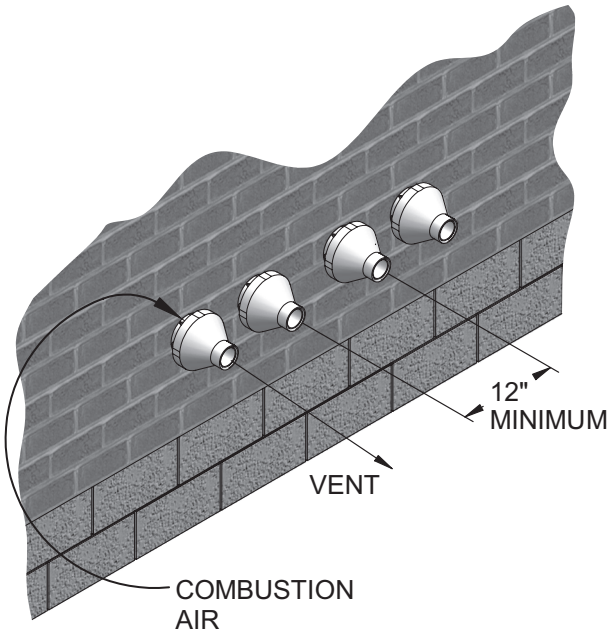

Figure 4-12 *Concentric Vent and Combustion Air Termination*

5 Vertical direct venting

Vent/air termination – vertical

⚠ WARNING Follow instructions below when determining vent location to avoid possibility of severe personal injury, death or substantial property damage.

Determine location

Locate the vent/air terminations using the following guidelines:

1. The total length of piping for vent or air must not exceed the limits given in the General Venting Section of this manual.

2. Prepare the vent termination and the air termination elbow (FIG. 5-1A) by inserting bird screens.

3. The vent must terminate at least 3 feet above the highest place in which the vent penetrates the roof and at least 2 feet above any part of a building within 10 horizontal feet.

4. The air piping must terminate in a down-turned 180° return pipe no further than 2 feet (.6 m) from the center of the vent pipe. This placement avoids recirculation of flue products into the combustion air stream.

5. The vent piping must terminate in an up-turned coupling as shown in FIG. 5-1A. The top of the coupling must be at least 1 foot above the air intake. When the vent termination uses a rain cap as illustrated in FIG. 5-1B maintain at least 36" (914 mm) above the air inlet. The air inlet pipe and vent pipe can be located in any desired position on the roof, but must always be no further than 2 feet (.6 m) apart and with the vent termination at least 1 foot above the air intake.

6. Maintain the required dimensions of the finished termination piping as shown in FIG. 5-1A.

7. Do not extend exposed vent pipe outside of building more than shown in this document. Condensate could freeze and block vent pipe.

⚠ WARNING Rooftop vent and air inlet terminations must terminate in the same pressure zone, unless vertical vent sidewall air is set up as shown in the General Venting - Vertical Vent, Sidewall Air Section.

Figure 5-1A *PVC/CPVC/Polypropylene Vertical Termination of Air and Vent*

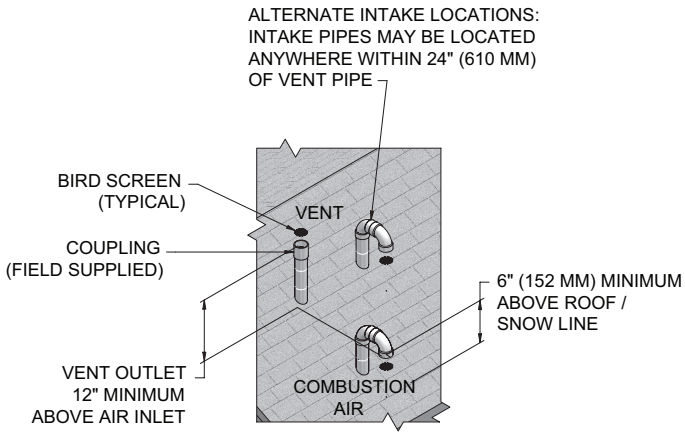

Figure 5-1B *Stainless Steel Vertical Termination of Air and Vent*

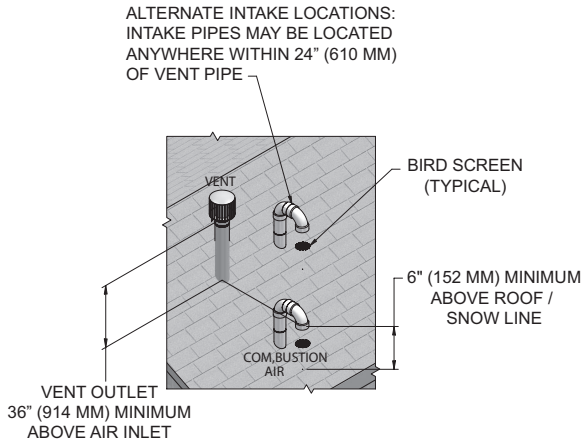

8. Locate terminations so they are not likely to be damaged by foreign objects, such as stones or balls, or subject to buildup of leaves or sediment.

5 Vertical direct venting *(continued)*

Vent/air termination – vertical

Prepare roof penetrations

1. Air pipe penetration:
   a. Cut a hole for the air pipe. Size the air pipe hole as close as desired to the air pipe outside diameter.

2. Vent pipe penetration:
   a. Cut a hole for the vent pipe. For either combustible or noncombustible construction, size the vent pipe hole with at least a 1/2 inch clearance around the vent pipe outer diameter:
      - 5½ inch hole (140 mm) hole for 4 inch (102 mm) vent pipe
      - 7½ inch hole (191 mm) hole for 6 inch (152 mm) vent pipe
   b. Insert a galvanized metal thimble in the vent pipe hole (when required by local codes).

3. Space the air and vent holes to provide the minimum spacing shown in FIG.'s 5-1A and 5-1B.

4. Follow all local codes for isolation of vent pipe when passing through floors, ceilings, and roofs.

5. Provide flashing and sealing boots sized for the vent pipe and air pipe.

Multiple vent/air terminations

1. When terminating multiple Knight XL boilers, terminate each vent/air connection as described in this manual (FIG. 5-2).

⚠ WARNING Terminate all vent pipes at the same height and all air pipes at the same height to avoid recirculation of flue products and the possibility of severe personal injury, death, or substantial property damage.

2. Place roof penetrations to obtain minimum clearance of 12 inches (305 mm) between edge of air intake elbow and adjacent vent pipe of another boiler for U.S. installations (see FIG. 5-2). For Canadian installations, provide clearances required by CSA B149.1 Installation Code.

3. The air inlet of a Knight XL boiler is part of a direct vent connection. It is not classified as a forced air intake with regard to spacing from adjacent boiler vents.

Figure 5-2 *Vertical Terminations with Multiple Boilers*

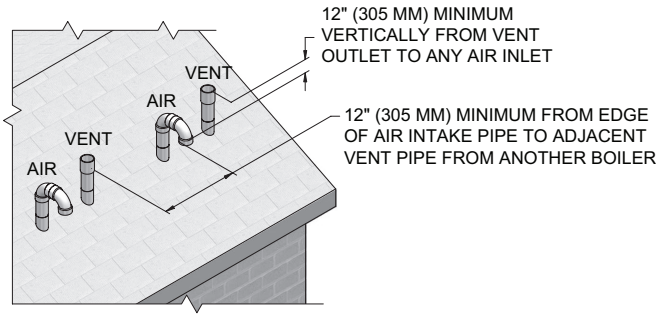

Figure 5-3 *Alternate Vertical Terminations with Multiple Boilers*

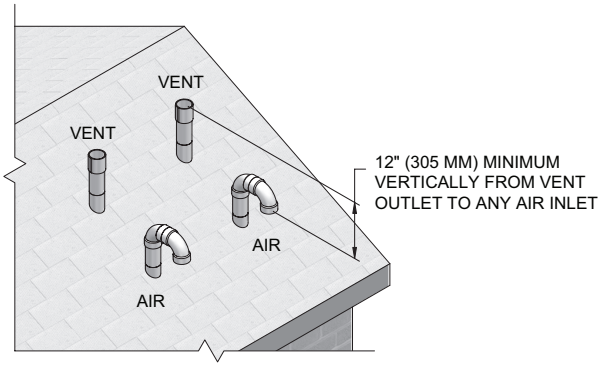

5 Vertical direct venting

Vertical termination – optional concentric vent: Models 400 - 500 Only

Description and usage

Lochinvar offers an optional concentric combustion air and vent pipe termination kit. Both combustion air and vent pipes must attach to the termination kit. The termination kit must terminate outside the structure and must be installed as shown in FIG. 5-4.

Field supplied pipe and fittings are required to complete the installation.

The required combustion vent pipe fittings are listed in Table 3H.

Vertical termination installation

1. See Section 5, Vertical Direct Venting - Determine Location (where applicable).

Figure 5-4 *Concentric Vertical Termination*

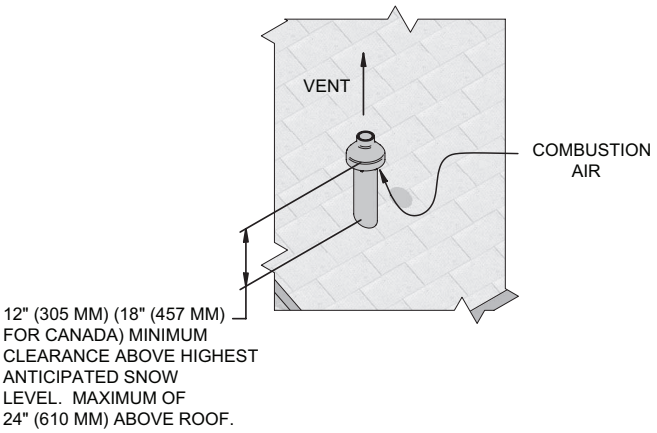

Figure 5-5 *Do Not Install U-Bend to Rain Cap*

2. Cut one (1) hole (7 inch (178 mm) diameter for #100140484 installations) into the structure to install the termination kit.

3. Partially assemble the concentric vent termination kit. Clean and cement following the cleaning procedures in these instructions.
   a. Cement the Y concentric fitting to the larger diameter kit pipe (see FIG. 4-8).
   b. Cement rain cap to the smaller diameter kit pipe (see FIG. 4-8).

NOTICE Instead of cementing the smaller pipe to the rain cap, a field supplied stainless steel screw may be used to secure the two (2) components together when field disassembly is desired for cleaning (see FIG. 4-10).

⚠ WARNING When using the alternate screw assembly method, drill a clearance hole in the rain cap and a pilot hole in the vent pipe for the screw size being used. Failure to drill adequate holes may cause cracking of PVC components, allowing combustion products to be recirculated. Failure to follow this warning could result in personal injury or death.

5 Vertical direct venting *(continued)*

Vertical termination – optional concentric vent: Models 400 - 500 Only

⚠ WARNING Do not operate the appliance with the rain cap removed or recirculation of combustion products may occur. Water may also collect inside the larger combustion air pipe and flow to the burner enclosure. Failure to follow this warning could result in product damage or improper operation, personal injury, or death.

4. Install the Y concentric fitting pipe assembly up through the structure's hole and field supplied roof boot/flashing.

NOTICE Do not allow insulation or other materials to accumulate inside the pipe assembly when installing through the hole.

5. Secure the assembly to the roof structure as shown below in FIG. 5-6 using field supplied metal strapping or equivalent support material.

Figure 5-6 *Concentric Vent Roof Installation*

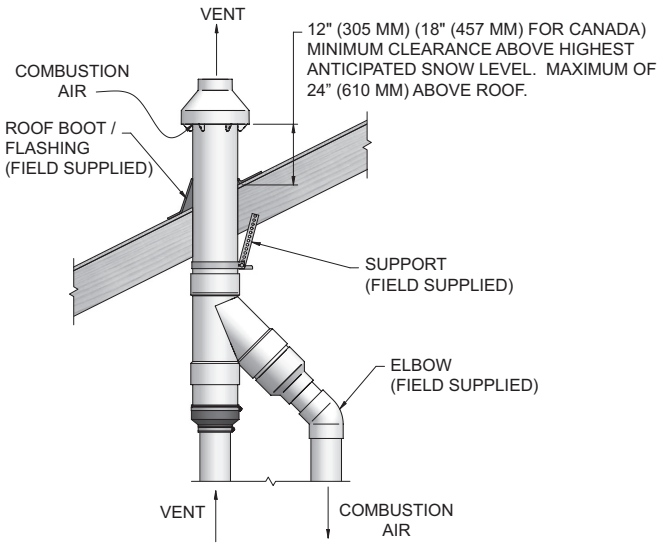

NOTICE Ensure termination height is above the roof surface or anticipated snow level (12 inches (305 mm) in U.S.A. or 18 inches (457 mm) in Canada) as shown in FIG. 5-4.

NOTICE If assembly is too short to meet height requirement, the two (2) pipes supplied in the kit may be replaced by using the same diameter, field supplied standard schedule 40 PVC for 100140484. Do not extend dimension D* more than 60 inches (1524 mm) (see FIG. 4-9).

CAUTION DO NOT use field-supplied couplings to extend pipes. Airflow restriction will occur.

6. Install the rain cap and the small diameter pipe assembly into the roof penetration assembly. Ensure the small diameter pipe is fastened tightly into the rubber adapter for #100140484 installations.

7. Cement the appliance combustion air and vent pipes to the concentric vent termination assembly. See FIG. 5-6 for proper pipe attachment.

8. Operate the appliance through one (1) heat cycle to ensure combustion air and vent pipes are properly connected to the concentric vent termination connections.

Multiventing vertical terminations

When two (2) or more direct vent appliances are vented near each other, each appliance must be individually vented (see FIG. 5-7). NEVER common vent or breach vent this appliance. When two (2) or more direct vent appliances are vented near each other, two (2) vent terminations may be installed as shown in FIG. 5-7. It is important that vent terminations be made as shown to avoid recirculation of flue gases.

Figure 5-7 *Concentric Vent and Combustion Air Vertical Termination*

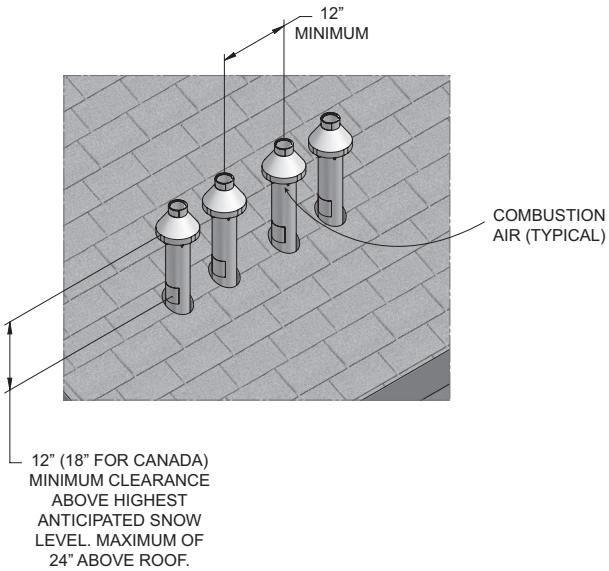

5 Vertical direct venting

Alternate vertical concentric venting

This appliance may be installed with a concentric vent arrangement where the vent pipe is routed through an existing unused venting system; or by using the existing unused venting system as a chase for vent and combustion air routing.

Concentric Venting Arrangement

The venting is to be vertical through the roof. The annular space between the O.D. of the vent pipe and the I.D. of the existing unused venting system is utilized for the combustion air source.

The minimum size of the existing vent system required to achieve enough annular space for combustion air can be found in Table 5A.

The upper and lower termination as well as any other unsealed joints in the existing vent system ***must be*** sealed to ensure that all combustion air is drawn from under the vent cap as shown in FIG.'s 5-8 and 5-9.

Approved venting materials must be used as specified in Table 3H.

Follow all vent / air termination and clearance requirements per this section to the appropriate example. Installation must comply with local requirements and with the National Fuel Gas Code.

The maximum allowable equivalent vent and air intake lengths for this venting arrangement are to be determined from the General Venting Section.

If an existing unused venting system is converted for use with this method of concentric venting, the installer must ensure that the existing venting system is clean and free from particulate contamination that will harm this appliance and cause increased nuisance calls or maintenance. See Table 1A for a list of corrosive contaminants and sources.

Two example scenarios of a concentric venting arrangement are shown for illustrative purposes in FIG.'s 5-8 and 5-9.

Table 5A *Alternate Vertical Concentric Vent / Chase Sizes*

Model	Vent / Air Inlet Size	Minimum Existing Vent / Chase Size
400 - 500	4"	7"
650 - 1000	6"	10"

Figure 5-8 *Concentric Vent Example 1*

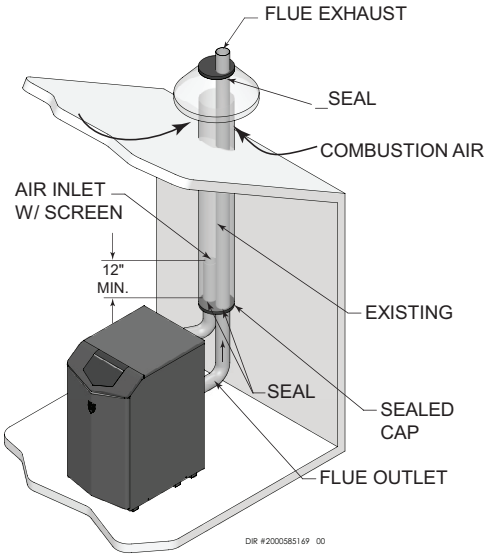

*For concept illustration only. Individual installations may vary due to job site specific equipment.

Figure 5-9 *Concentric Vent Example 2*

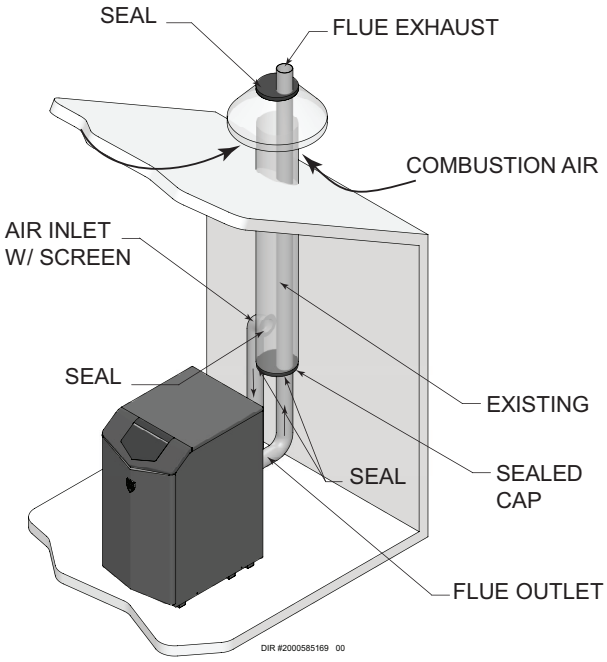

*For concept illustration only. Individual installations may vary due to job site specific equipment.

5 Vertical direct venting *(continued)*

Existing vent as a chase

Follow all existing termination and clearance requirements and allowable pipe lengths. Use only approved venting materials listed in the General Venting Section of this manual.

Figure 5-10 *Existing Vent as a Chase*

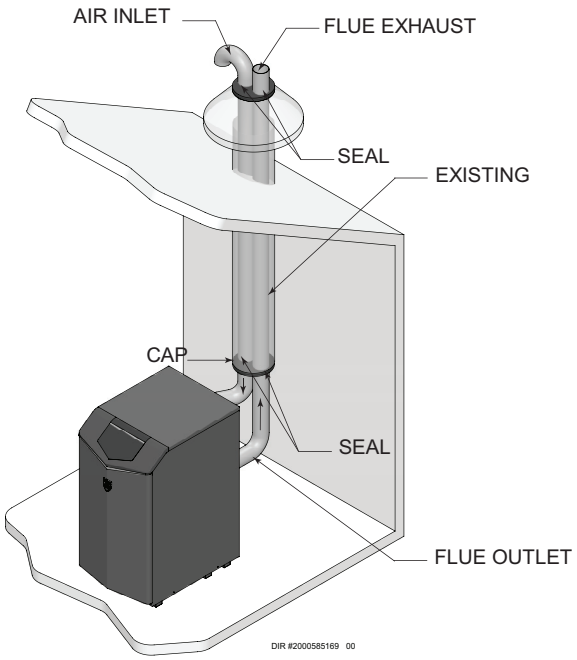

*For concept illustration only. Individual installations may vary due to job site specific equipment.

6 Outdoor installations

Outdoor venting

- In order to properly install the appliance in an outdoor configuration, the appropriate outdoor ready model (ex. KBX0400N-O) must be purchased WITH a factory supplied outdoor installation kit.
- In order to properly install the appliance in an outdoor configuration the optional outdoor kit must be used (see Table 6A).
- Vent materials for outdoor venting are to be field supplied.
- Vent materials must be stainless steel.
- The vent must terminate at least 36 inches above the top of the unit.
- All vent materials must be supported as recommended by the vent manufacturer.
- The terminations in Table 6B must be used.

***Table 6A** Indoor to Outdoor Conversion Kit*

Model	Indoor to Outdoor Conversion Kit
400 - 1000	100331712

NOTICE Before installing a venting system, follow all requirements found in the General Venting section of this manual.

Units are self-venting and can be used outdoors when installed with the optional outdoor kit. All vent materials must be field supplied and supported per the vent manufacturer's instructions.

⚠WARNING Only use the vent caps specified in this manual. Personal injury or product damage may result if any other cap is used, or if an indoor model is used outdoors. Properly install all covers, doors, and jacket panels to ensure proper operation and prevent a hazardous condition.

Combustion air supply must be free of contaminants (see the Combustion and Ventilation Air Requirements section of this manual). To prevent recirculation of the flue products into the combustion air inlet, follow all instructions in this section.

Outdoor vent / air inlet location

Keep venting areas free of obstructions. Keep area clean and free of combustible and flammable materials. Maintain minimum clearances to combustibles as stated in this manual.

Location of unit

For outdoor models, you must install a flue termination. Instructions for mounting the flue termination are included in this manual. Do not install outdoor models directly on the ground. You must install the outdoor unit on a concrete, brick, block, or other non-combustible pad. See Outdoor Installation Venting. A wind proof cabinet protects the unit from weather.

⚠WARNING This product contains a condensate management and disposal system that may be subject to freezing if exposed to sustained temperatures below 32°F. Precautions should be taken to protect the condensate trap and drain lines during extended periods of outdoor temperatures below 32°F.

CAUTION This unit is not intended for installations where temperatures may reach below 32°F (0°C). Exposure to freezing temperatures will cause the system and appliance to freeze and leak.

***Figure 6-1** Outdoor installation*

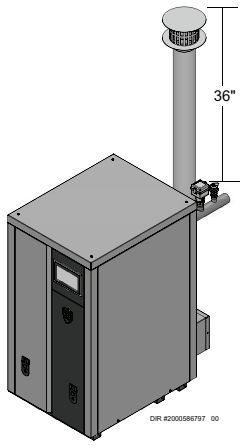

***Table 6B** Approved Stainless Steel Adapters and Rain Caps*

Model	DuraVent		Z-Flex		Heat Fab		Metal Fab		Security Chimney	
	Adapter	Rain Cap	Adapter	Rain Cap	Adapter	Rain Cap	Adapter	Rain Cap	Adapter	Rain Cap
400 - 500	FSA-4PVC-4FNS	FSRC4	2SVSLA04	2SVSXITC04	9401PVC	CCA04EX06	4CGPVCA	4FCSEC-C60	SS4PVCU	SS4ECU
650 - 1000	810005231	FSRC6	-	-	9601PVC	CCA06EX08	6CGPVCA	6FCSEC-C60	SS6PVCU	SS6ECU

6 Outdoor installations *(continued)*

Outdoor venting

NOTICE Before installing a venting system, follow all requirements found in the General Venting section.

Units are self-venting and can be used outdoors when installed with the optional outdoor kit.

Combustion air supply must be free of contaminants (see Combustion and Ventilation Air, page 10). To prevent recirculation of the flue products into the combustion air inlet, follow all instructions in this section.

Outdoor vent/air inlet location

Keep venting areas free of obstructions. Keep area clean and free of combustible and flammable materials. Maintain a minimum clearance of 3" (76 mm) to combustible surfaces and a minimum of 36" (915 mm) clearance to the air inlet. To avoid a blocked air inlet or blocked flue condition, keep the air inlet, flue outlet, and condensate trap clear of leaves, debris, etc.

Do not install outdoor models directly on the ground. You must install the outdoor unit on a concrete, brick, block, or other non-combustible pad.

Do not locate unit so that high winds can deflect off of adjacent walls, buildings, or shrubbery causing recirculation. Recirculation of flue products may cause operational problems, bad combustion, or damage to controls.

Multiple unit outdoor installations require 48" (1.22 m) clearance between each vent cap. Locate outdoor cap at least 48" (1.22m) below and 48" (1.22 m) horizontally from any window, door, walkway, or gravity air intake.

Locate unit at least 10 feet (3.05 m) away from any forced air inlet.

Locate unit at least 3 feet (0.91 m) outside any overhang.

Clearances around outdoor installations can change with time. Do not allow the growth of trees, shrubs, or other plants to obstruct the proper operation of the outdoor vent system.

Do not install in locations where rain from building runoff drains will spill onto the unit.

Figure 6-2 *Outdoor Venting - Stainless Steel*

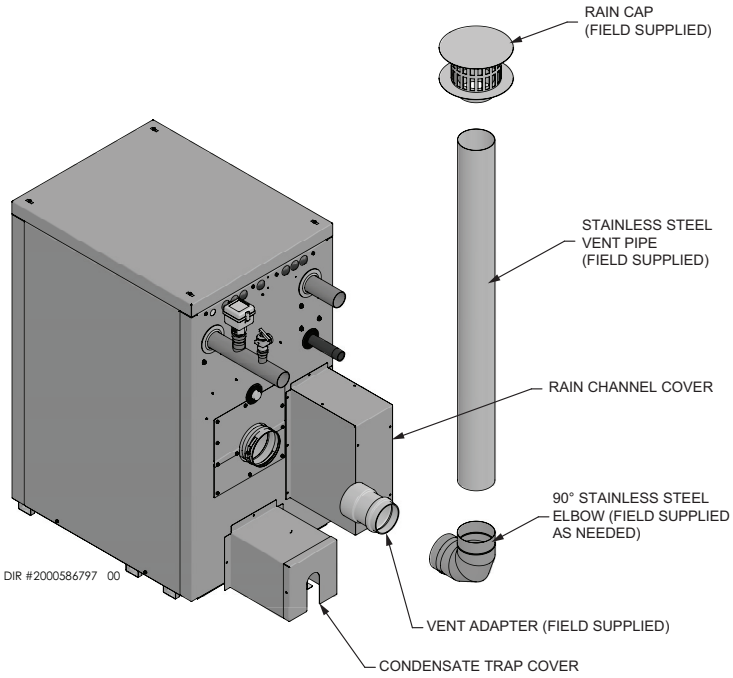

NOTE: See Table 6B for approved stainless steel adapters and rain caps.

7 Hydronic piping

System water piping methods

The Knight XL is designed to function in a closed loop pressurized system not less than 12 psi (83 kPa) (Non-metallic system piping must have an oxygen barrier to be considered a closed loop). A temperature and pressure gauge is included to monitor system pressure and outlet temperature and should be located on the boiler outlet.

It is important to note that the boiler has a minimal amount of pressure drop which must be figured in when sizing the circulators. Each boiler installation must have an air elimination device, which will remove air from the system. Install the boiler so the gas ignition system components are protected from water (dripping, spraying, etc.) during appliance operation or basic service of circulator replacement, valves, and others.

Observe a minimum of 1/4 inch (6 mm) clearance around all un-insulated hot water pipes when openings around the pipes are not protected by non-combustible materials.

Low water cutoff device

On a boiler installed above radiation level, some states and local codes require a low water cutoff device at the time of installation.

Chilled water system

If the boiler supplies hot water to heating coils in air handler units, flow control valves or other devices must be installed to prevent gravity circulation of heater water in the coils during the cooling cycle. A chilled water medium must be piped in parallel with the heater.

Freeze protection fluids

Freeze protection for new or existing systems must use glycol that is specially formulated for this purpose. This includes inhibitors, which prevent the glycol from attacking the metallic system components. Make certain to check that the system fluid is correct for the glycol concentration and inhibitor level. The system should be tested at least once a year and as recommended by the producer of the glycol solution. Allowance should be made for the expansion of the glycol solution in the system piping.

⚠ WARNING Use only inhibited propylene glycol solutions, which are specifically formulated for hydronic systems. Ethylene glycol is toxic and can attack gaskets and seals used in hydronic systems.

Water connections

The inlet and outlet water connections on the KBX0400 - KBX0800 are 2" copper sweat. The inlet and outlet water connections on the KBX1000 are 2-1/2" copper sweat. The KBX1000 water connections also have a groove in case a groove-lock fitting is preferred. For copper-to-copper connections, Victaulic style 607 QuikVic rigid couplings are recommended. For copper-to-stainless steel connections, Victaulic style 644 transition couplings are recommended. For copper-to-carbon steel connections, Victaulic style 647 dielectric transitions are recommended. For other groove-lock connection styles contact the factory.

Figure 7-1A *Sweat connection for 1000*

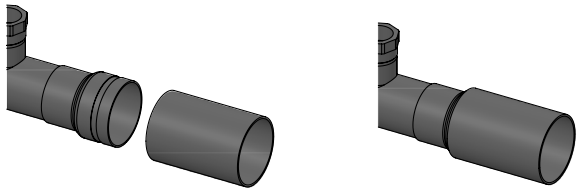

2000612893 00

General piping information

IMPORTANT All boiler piping must contain an oxygen barrier. This will help prevent any excess oxygen from entering the system.

Basic steps are listed below along with illustrations on the following pages (FIG.'s 6-7 through 6-11), which will guide you through the installation of the Knight XL (reference FIG.'s 7-2A and 7-2B).

1. Connect the system return marked "Inlet".
2. Connect the system supply marked "Outlet".
3. Install purge and balance valve or shutoff valve and drain on system return to purge air out of each zone.
4. Install a backflow preventer on the cold feed make-up water line.
5. Install a pressure reducing valve on the cold feed make-up water line, (15 psi (103 kPa) nominal). Check temperature and pressure gauge (shipped separately), which should read a minimum pressure of 12 psi (83 kPa).
6. Install a circulator as shown on the piping diagrams in this section. Make sure the circulator is properly sized for the system and friction loss.

NOTICE The relief valve, tee and any other necessary fittings are shipped in the install kit with the boiler and are to be field installed (FIG. 7-1).

7 Hydronic piping *(continued)*

7. Install an expansion tank on the system supply. Consult the tank manufacturer's instruction for specific information relating to tank installation. Size the expansion tank for the required system volume and capacity.

8. Install an air elimination device on the system supply.

9. Install a drain valve at the lowest point of the system. ***Note:*** The boiler cannot be drained completely of water without purging the unit with an air pressure of 15 psi (103 kPa).

10. This appliance is supplied with a relief valve sized in accordance with ASME Boiler and Pressure Vessel Code, Section IV ("Heating Boilers"). Pipe the discharge of the safety relief valve to a suitable drain to prevent injury in the event of pressure relief. Provide piping that is the same size as the safety relief valve outlet. Never block the outlet of the safety relief valve.

11. Install a field supplied strainer/filter to prevent damage to the heat exchanger caused by debris entering from the system piping. When installing in a pre-existing system, a strainer/filter capable of removing debris left in the system is recommended.

12. Install a field supplied magnetic separator in the heating system return line as close as practical to the boiler per the manufacturer's instructions.

NOTICE A magnetic separator is recommended when a unit is installed in a retrofit system or a system containing steel and/or cast iron pipe.

See the piping illustrations included in this section, FIG.'s 7-4 thru 7-8 for suggested guidelines in piping the Knight XL.

NOTICE Please note that these illustrations are meant to show system piping concept only, the installer is responsible for all equipment and detailing required by local codes.

Temperature and pressure gauge installation

Basic steps are listed below to guide you through the installation of the temperature and pressure gauge provided with the unit.

1. Install a field provided tee with the gauge fitting positioned vertically and on the top (FIG. 7-1B)
2. Install the temperature and pressure gauge provided with the unit into the top fitting of the tee (a bushing may be necessary) installed in Step 8 (FIG. 7-1B).

Figure 7-1B *Temperature and Pressure Gauge Installation*

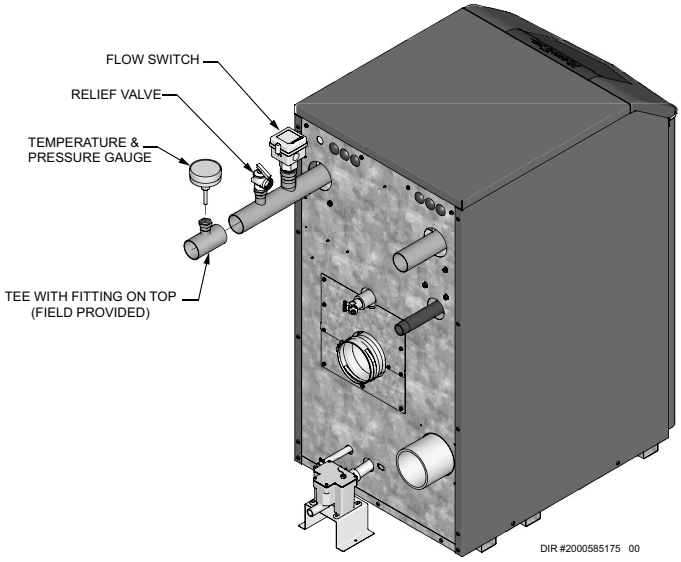

7 Hydronic piping

Near boiler piping components

1. **Boiler system piping:**
   Boiler system piping MUST be sized per the pipe requirements listed in Table 6B. Reducing the pipe size can restrict the flow rate through the boiler, causing inadvertent high limit shutdowns and poor system performance. Flow rates are based on 20 feet (6 m) of piping, 4 - 90° elbows, and 2 - fully ported ball valves.

2. **Boiler system circulating pump:**
   Field supplied. The boiler circulating pump should be based on the heat exchanger pressure drop and any additional piping.

3. **Domestic hot water circulating pump:**
   Field supplied. The pump MUST be sized to meet the specified minimum flow requirements listed in FIG. 7-3. Consult the indirect water heater operating guide to determine flow characteristics for the selected product used.

4. **Variable speed boiler system circulator:**
   Knight XL boilers are capable of controlling a variable speed boiler system circulator. Variable speed circulators MUST be sized to meet the specified minimum flow requirements listed in FIG. 7-3 at full speed.

5. **Boiler isolation valves:**
   Field supplied. Full port ball valves are required. Failure to use full port ball valves could result in a restricted flow rate through the boiler.

6. **Check valves:**
   Field supplied. Check valves are recommended for installation as shown in FIG.'s 6-7 through 6-11. Failure to install check valves could result in a reverse flow condition during pump(s) off cycle.

7. **Domestic indirect hot water isolation valves:**
   Field supplied. Full port ball valves are required. Failure to use full port ball valves could result in a restricted flow rate through the boiler.

8. **Anti-scald mixing valve:**
   Field supplied. An anti-scald mixing valve is recommended when storing domestic hot water above 115°F (46°C).

9. **Unions:**
   Field supplied. Recommended for unit serviceability.

10. **Temperature and pressure gauge:**
    Factory supplied. The temperature and pressure gauge is shipped loose. It is the responsibility of the contractor to install the temperature and pressure gauge on the boiler water outlet.

11. **Pressure relief valve:**
    Factory supplied. The pressure relief valve is sized to ASME specifications.

12. **Boiler purge valve:**
    Field supplied. The boiler purge valve is used to remove entrapped air from the heat exchanger during start-up.

13. **System temperature sensor:**
    Lochinvar supplies a system temperature sensor. The sensor is to be installed in the heating loop downstream from the boiler hot water piping and heating loop junction. The sensor should be located far enough downstream to sense system diluted water temperature.

14. **Water Meter:**
    Field supplied. A water meter to monitor makeup water is recommended. Makeup water volume should not exceed 5% of total system per year.

15. **Strainer/Filter:**
    Field supplied. Install a Y-strainer or equivalent multi-purpose strainer/filter just before the boiler pump at the inlet of the heat exchanger. This item is used to remove system debris from older hydronic systems and to protect newer systems.

16. **Magnetic Separator:**
    Field supplied. Install a magnetic separator in the heating system return line as close as practical to the boiler per the manufacturer's instructions.

7 Hydronic piping *(continued)*

Circulator sizing

The Knight XL heat exchanger does have a pressure drop, which must be considered in your system design. Refer to the graphs in FIG 7-3 pressure drop through the Knight XL heat exchanger.

Near boiler piping connections

Figure 7-2A *Near Boiler Piping w/Y-Strainer*

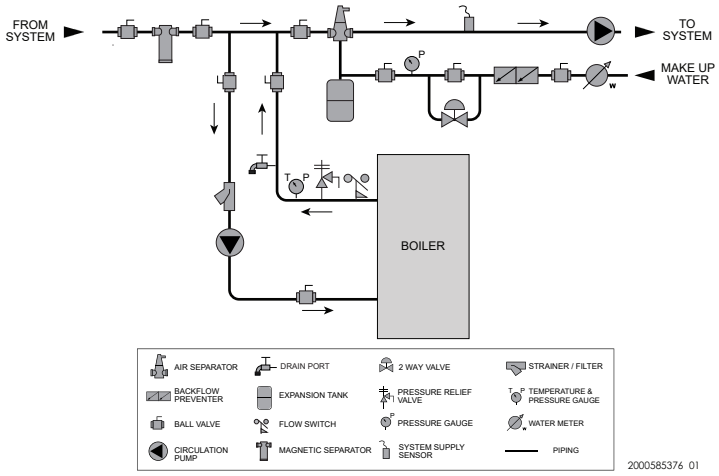

Figure 7-2B *Near Boiler Piping w/Low Loss Header*

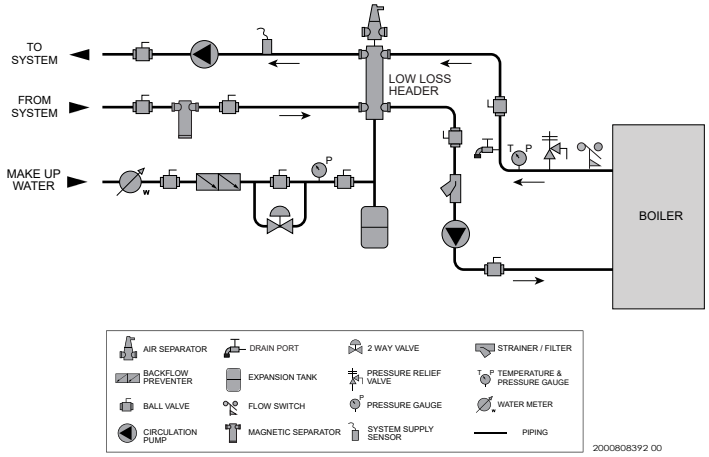

Variable speed pump option

Variable speed pump setup

Before operation, ensure the following:

- Pump is set for an input signal of 0 - 10VDC by the dip switches on the pump control
- Pump is set for external signal control (if applicable)
- Pump is set for linear output (if applicable)
- If pump does not come equipped with a 0 - 10 VDC input option, an optional module will be required from the vendor

SMART TOUCH / Multi-temperature loop control option

The Knight XL boiler is capable of producing up to three (3) set point temperatures to meet different space heating demands. When using more than one temperature demand it is necessary to protect the lower temperature loop from overheating. To help aid with this protection, Lochinvar offers the Multi- Temperature Loop Control Board Kit (100167843).

7 Hydronic piping

Figure 7-3 *Pressure Drop vs. Flow*

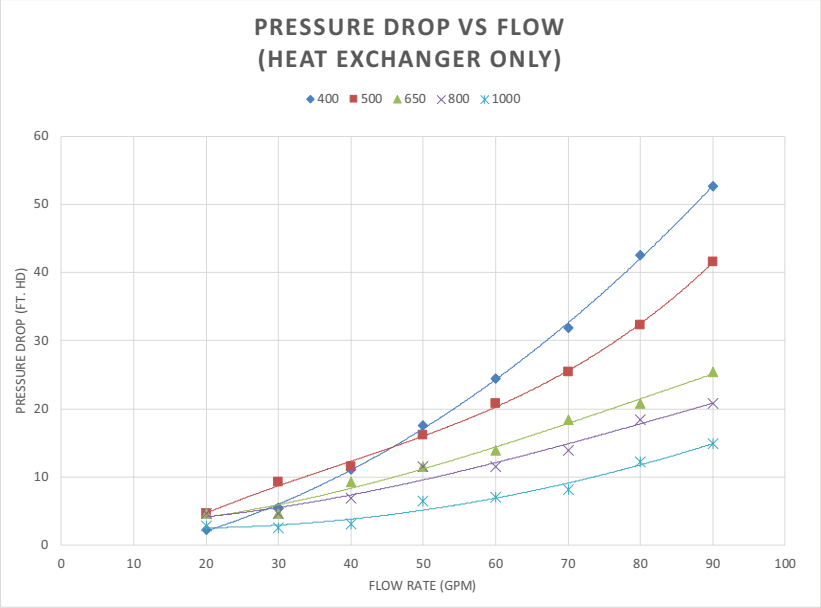

Table 7A *Sizing Information for Temperature Rise Applications_20°F, 25°F, 30°F and 35°F*

TEMPERATURE RISE APPLICATIONS									
Model	MINIMUM PIPE SIZE	20°F		25°F		30°F		35°F	
		GPM	FT/HD	GPM	FT/HD	GPM	FT/HD	GPM	FT/HD
400	2"	38	10	30	7	25	5	22	4
500	2"	48	14	38	12	32	9	27	8
650	2"	62	16	50	11	41	9	36	7
800	2"	76	17	61	13	51	10	44	9
1000	2 1/2"	96	18	76	11	64	8	54	6

7 Hydronic piping *(continued)*

Figure 7-4 *Single Boiler - Multiple Temperatures*

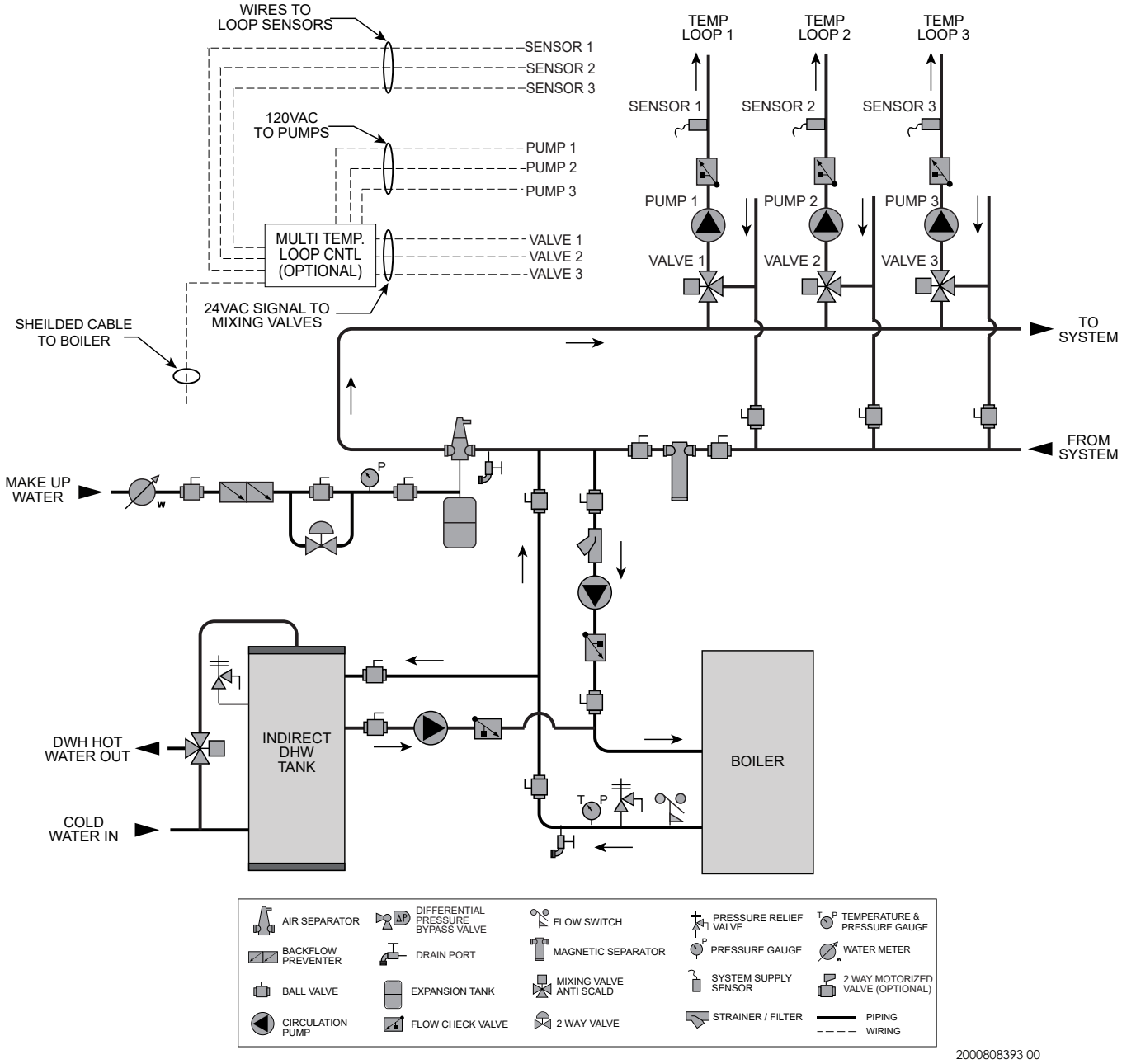

CAUTION Mixing valves are required for the protection of low temperature loops.

NOTICE Please note that these illustrations are meant to show system piping concept only, the installer is responsible for all equipment. The installer must follow all manufacturer's instructions for each system component. The installer is responsible for compliance with local codes.

7 Hydronic piping

Figure 7-5 *Single Boiler - Primary/Secondary Piping*

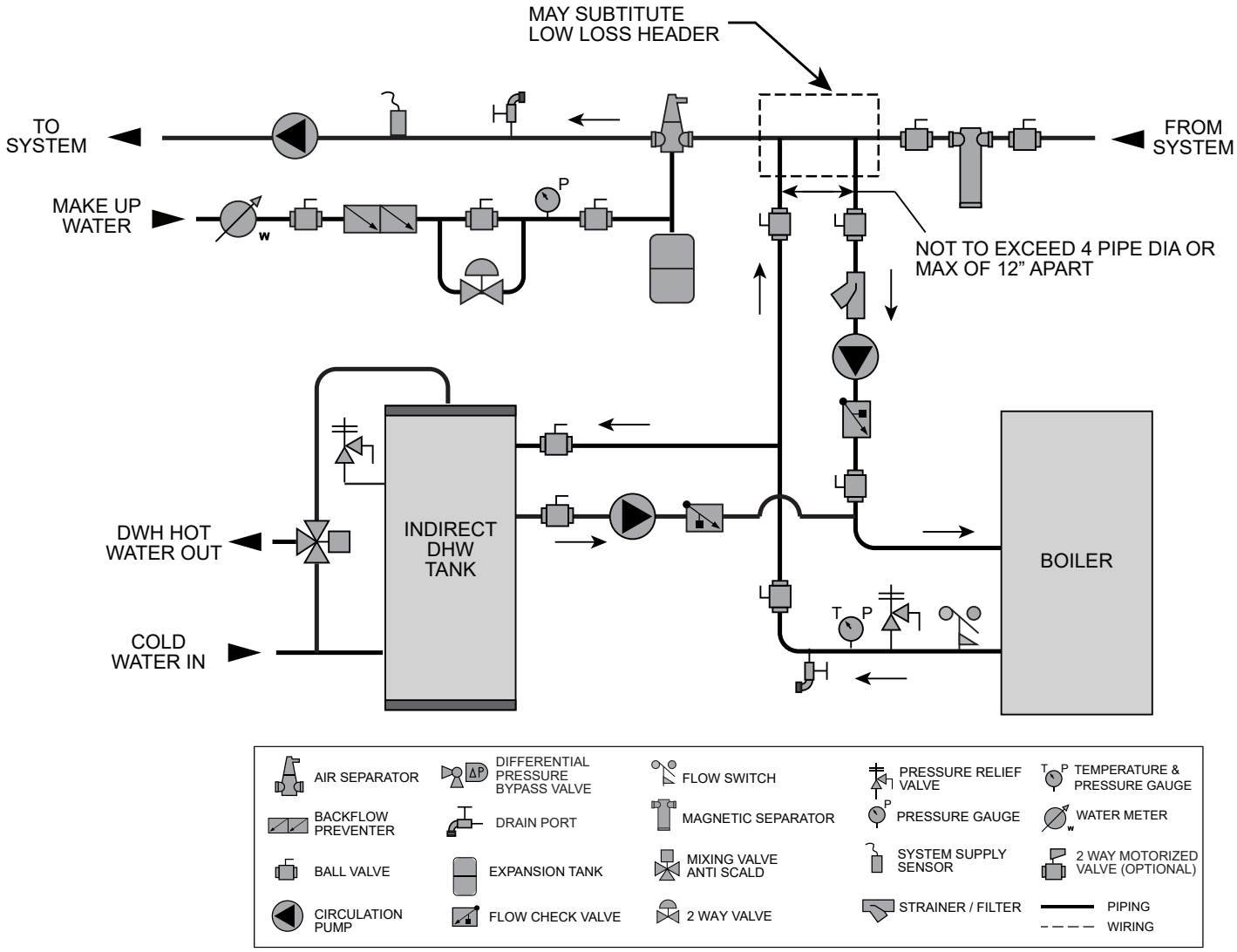

2000808394 00

CAUTION Indirect water heaters are capable of transferring a limited number of Btu's into the water. Ensure boiler output does not not exceed indirect water heater transfer capabilities.

NOTICE Please note that these illustrations are meant to show system piping concept only, the installer is responsible for all equipment. The installer must follow all manufacturer's instructions for each system component. The installer is responsible for compliance with local codes.

NOTICE System flow should always remain higher than the required flow for the boiler(s) when the boiler(s) is in operation to prevent short cycling and high limit issues.

7 Hydronic piping *(continued)*

Figure 7-6 *Multiple Boilers - Multiple Temperatures*

Model	Number of Units						
	2	3	4	5	6	7	8
	Required Pipe Sizes in NPT (Based on 30°△)						
400	2.5	3	4	4	6	6	6
500	3	4	4	4	6	6	6
650	3	4	4	6	6	6	6
800	4	4	6	6	6	6	8
1000	4	6	6	6	8	8	8

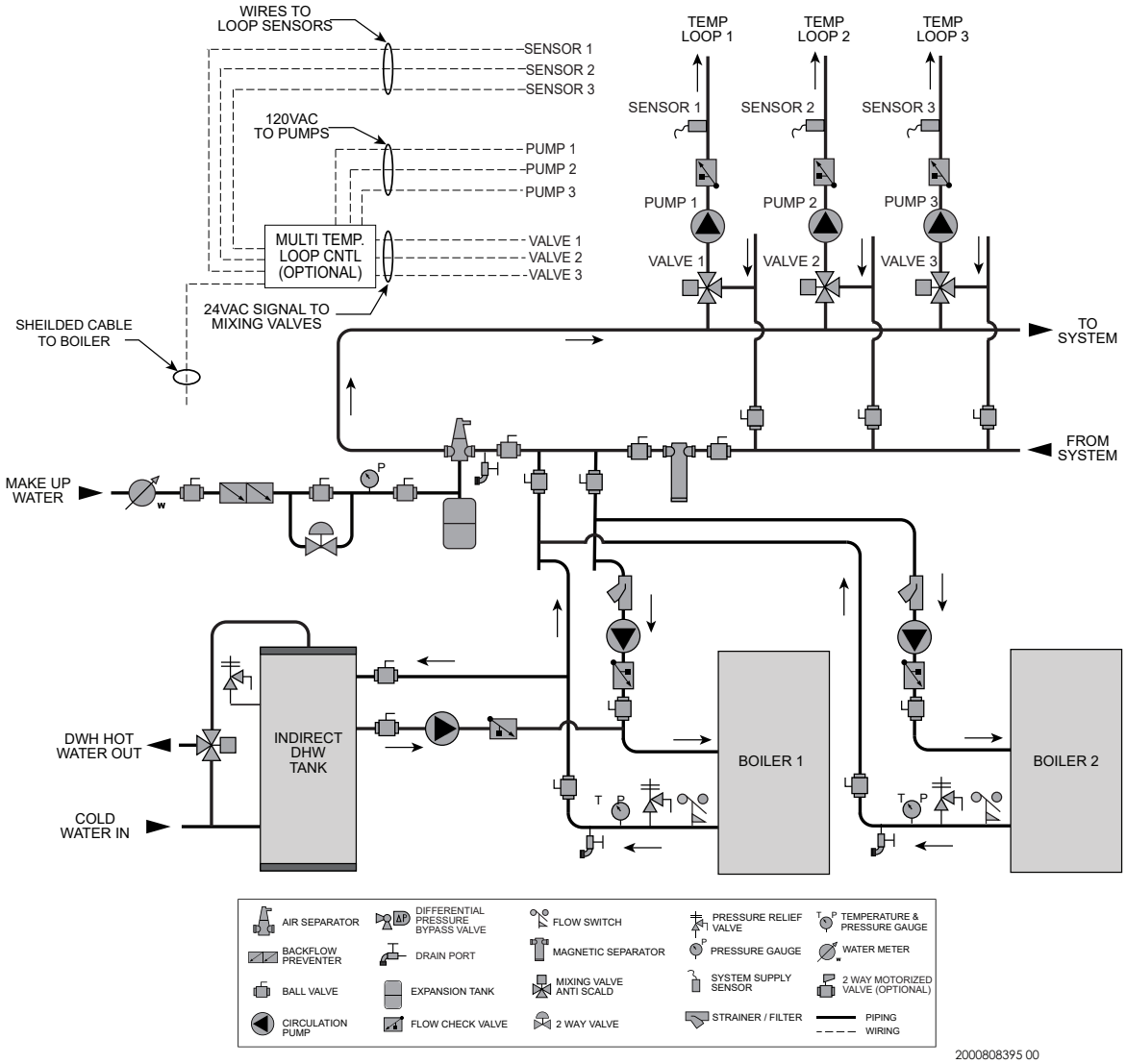

CAUTION Indirect water heaters are capable of transferring a limited number of Btu's into the water. Ensure boiler output does not not exceed indirect water heater transfer capabilities.

CAUTION Mixing valves are required for the protection of low temperature loops.

NOTICE Please note that these illustrations are meant to show system piping concept only, the installer is responsible for all equipment. The installer must follow all manufacturer's instructions for each system component. The installer is responsible for compliance with local codes.

7 Hydronic piping

Figure 7-7 *Multiple Boilers - Primary/Secondary Piping*

Model	Number of Units						
	2	3	4	5	6	7	8
	Required Pipe Sizes in NPT (Based on 30°△)						
400	2.5	3	4	4	6	6	6
500	3	4	4	4	6	6	6
650	3	4	4	6	6	6	6
800	4	4	6	6	6	6	8
1000	4	6	6	6	8	8	8

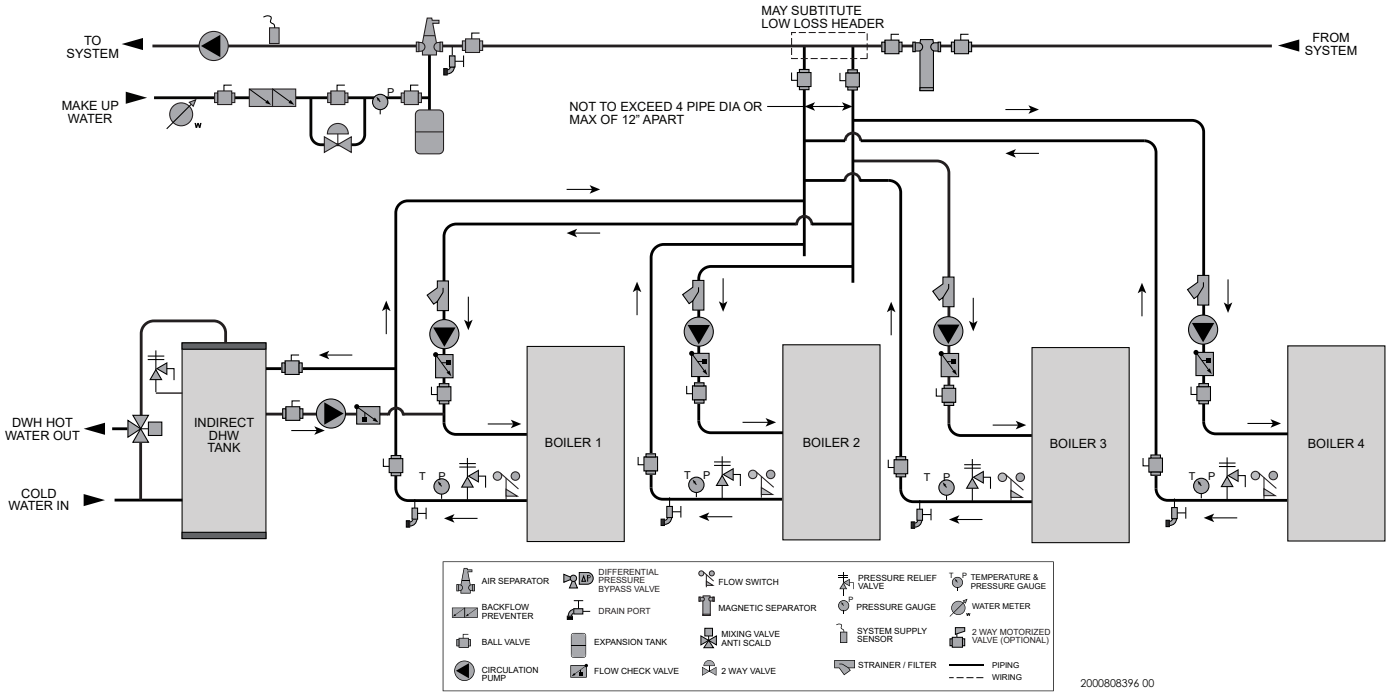

CAUTION Indirect water heaters are capable of transferring a limited number of Btu's into the water. Ensure boiler output does not not exceed indirect water heater transfer capabilities.

NOTICE Please note that these illustrations are meant to show system piping concept only, the installer is responsible for all equipment. The installer must follow all manufacturer's instructions for each system component. The installer is responsible for compliance with local codes.

NOTICE System flow should always remain higher than the required flow for the boiler(s) when the boiler(s) is in operation to prevent short cycling and high limit issues.

7 Hydronic piping *(continued)*

Figure 7-8 *Single Boiler - Multiple Temperatures with DHW Piped as a Zone*

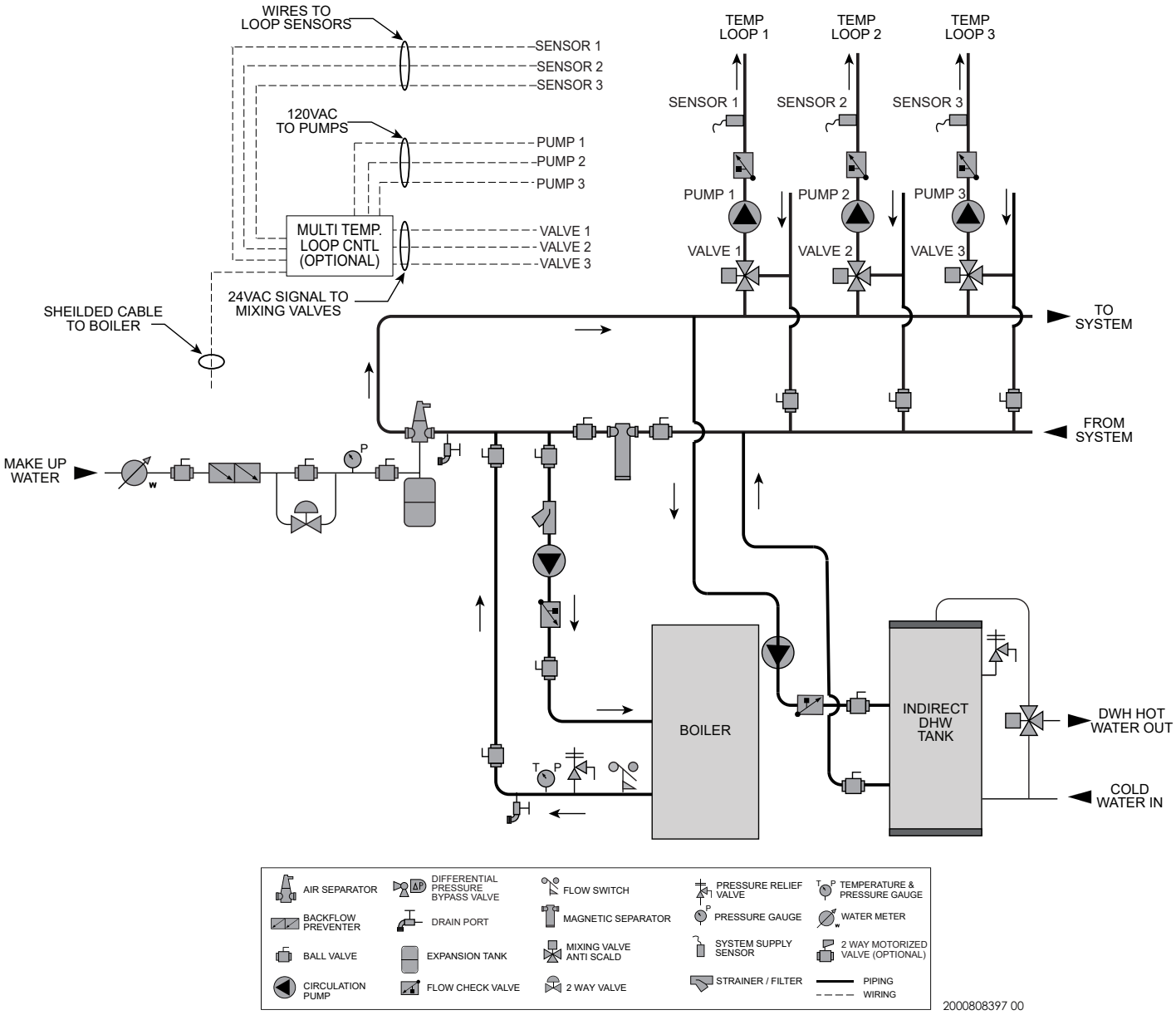

CAUTION Indirect water heaters are capable of transferring a limited number of Btu's into the water. Ensure boiler output does not not exceed indirect water heater transfer capabilities.

CAUTION Mixing valves are required for the protection of low temperature loops.

NOTICE Please note that these illustrations are meant to show system piping concept only, the installer is responsible for all equipment. The installer must follow all manufacturer's instructions for each system component. The installer is responsible for compliance with local codes.

NOTICE Please note that the installer is responsible for ensuring DHW prioritization when piped as a zone.

8 Gas connections

Connecting gas supply piping

1. Remove the top access panel and refer to FIG.'s 8-1 thru 8-2 to pipe gas to the boiler.
   a. Install ground joint union for servicing, when required.
   b. Install a manual shutoff valve in the gas supply piping outside boiler jacket when required by local codes or utility requirements.
   c. In Canada – When using manual main shutoff valves, it must be identified by the installer.

2. Install sediment trap / drip leg.

Figure 8-1 *Gas Supply Piping - Models 400 - 500*

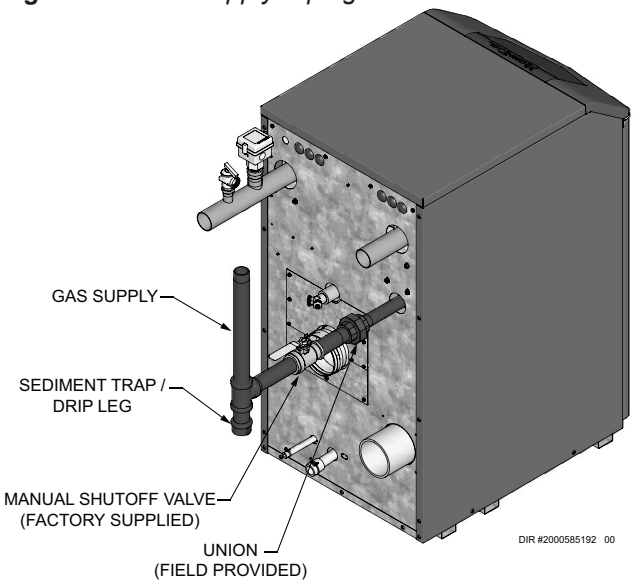

Figure 8-2 *Gas Supply Piping - Models 650 - 1000*

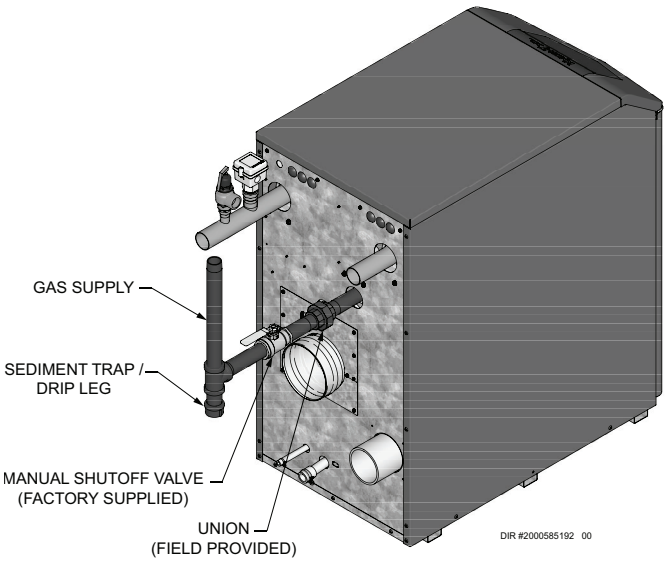

3. Support piping with hangers, not by the boiler or its accessories.

⚠ WARNING The gas valve and blower will not support the weight of the piping. Do not attempt to support the weight of the piping with the boiler or its accessories. Failure to comply could result in severe personal injury, death, or substantial property damage.

4. Purge all air from the gas supply piping.

5. Before placing the boiler in operation, check the boiler and its gas connection for leaks.
   a. The appliance must be disconnected from the gas supply piping system during any pressure testing of that system at a test pressure in excess of 1/2 PSIG (3.5 kPa).
   b. The appliance must be isolated from the gas supply piping system by closing a manual shutoff valve during any pressure testing of the gas supply piping system at test pressures equal to or less than 1/2 PSIG (3.5 kPa).
   c. The appliance and its gas connection must be leak tested before placing it in operation.

⚠ WARNING Do not check for gas leaks with an open flame – use the bubble test. Failure to use the bubble test or check for gas leaks can cause severe personal injury, death, or substantial property damage.

6. Use pipe sealing compound compatible with propane gases. Apply sparingly only to male threads of the pipe joints so that pipe dope does not block gas flow.

8 Gas connections *(continued)*

⚠ WARNING Failure to apply pipe sealing compound as detailed in this manual can result in severe personal injury, death, or substantial property damage.

⚠ WARNING Use two wrenches when tightening gas piping at boiler (FIG. 8-3), using one wrench to prevent the boiler gas line connection from turning. Failure to support the boiler gas connection pipe to prevent it from turning could damage gas line components.

***Figure 8-3** Inlet Pipe with Back-up Wrench*

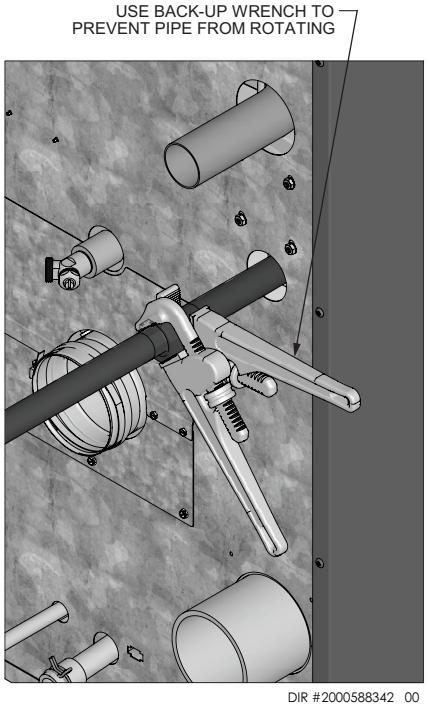

NOTICE Maximum inlet gas pressure must not exceed the value specified. Minimum value listed is for the purposes of input adjustment.

Natural gas:

Pipe sizing for natural gas

1. Refer to Table 8A for pipe length and diameter. Based on rated boiler input (divide by 1,000 to obtain cubic feet per hour).
   a. Table 8A is only for natural gas with specific gravity 0.60 inches, with a pressure drop through the gas piping of 0.3 inches w.c.
   b. For additional gas pipe sizing information, refer to ANSI Z223.1 (or B149.1 for Canadian installations).

Natural gas supply pressure requirements

1. Pressure required at the gas valve inlet pressure port:
   - Maximum 12 inches w.c. (3.5 kPa) with no flow (lockup) or with boiler on.
   - Minimum 4 inches w.c. (.99 kPa) with gas flowing (verify during boiler startup).
2. Install 100% lockup gas pressure regulator in supply line if inlet pressure can exceed 14 inches w.c. (3.5 kPa) at any time. Adjust lockup regulator for 14 inches w.c. (3.5 kPa) maximum.

Propane Gas:

⚠ WARNING Knight XL boilers are typically shipped ready to fire on natural gas. Check boiler rating plate to determine which fuel the boiler is set for. If set to natural gas, it may be converted to LP by installing a LP venturi and making a gas valve adjustment (see pages 13 and 14). In order to operate on LP gas, an orifice MUST BE installed (for 500 models) or a gas valve adjustment MUST BE made. Failure to comply could result in severe personal injury, death, or substantial property damage.

Pipe sizing for propane gas

1. Contact gas supplier to size pipes, tanks, and 100% lockup gas pressure regulator.

Propane Supply Pressure Requirements

1. Adjust propane supply regulator provided by the gas supplier for 14 inches w.c. (3.2 kPa) maximum pressure.
2. Pressure required at gas valve inlet pressure port:
   - Maximum 14 inches w.c. (3.2 kPa) with no flow (lockup) or with boiler on.
   - Minimum 8 inches w.c. (1.9 kPa) with gas flowing (verify during boiler startup).

⚠ WARNING Ensure that the high gas pressure regulator is at least 10 feet (3 m) upstream of the appliance.

8 Gas connections

***Table 8A** Natural Gas Pipe Size Chart*

Capacity of Schedule 40 Metallic Pipe in Cubic Feet of Natural Gas Per Hour (based on .60 specific gravity, 0.30" w.c. pressure drop)														
Pipe Size (Inches)	Length of Pipe in Straight Feet													
	10	20	30	40	50	60	70	80	90	100	125	150	175	200
1/2	131	90	72	62	55	N/A	N/A	N/A	N/A	N/A	N/A	N/A	N/A	N/A
3/4	273	188	151	129	114	104	95	89	83	79	70	63	58	N/A
1	514	353	284	243	215	195	179	167	157	148	131	119	109	102
1 1/4	1,060	726	583	499	442	400	368	343	322	304	269	244	224	209
1 1/2	1,580	1,090	873	747	662	600	552	514	482	455	403	366	336	313
2	3,050	2,090	1,680	1,440	1,280	1,160	1,060	989	928	877	777	704	648	602
2 1/2	4,860	3,340	2,680	2,290	2,030	1,840	1,690	1,580	1,480	1,400	1,240	1,120	1,030	960
3	8,580	5,900	4,740	4,050	3,590	3,260	3,000	2,790	2,610	2,470	2,190	1,980	1,820	1,700
4	17,500	12,000	9,660	8,270	7,330	6,640	6,110	5,680	5,330	5,040	4,460	4,050	3,720	3,460

Check inlet gas supply

NOTICE CSA or UL listed flexible gas connections are acceptable, but you must exercise caution to ensure that the line has adequate capacity to allow your boiler to fire at full rate. Consult with local codes for proper installation or service procedures.

⚠ WARNING DO NOT adjust gas valve outlet pressure. Attempting to alter the gas valve outlet pressure could result in damage to the valve, causing potential severe personal injury, death, or substantial property damage.

The gas piping must be sized for the proper flow and length of pipe, to avoid excessive pressure drop. Both the gas meter and the gas regulator must be properly sized for the total gas load.

If you experience a pressure drop greater than 1 inch w.c. (249 Pa), the meter, regulator, or gas line is undersized or in need of service. Perform the steps below when checking inlet gas supply:

1. Turn the main power switch to the "OFF" position.
2. Shut off gas supply at the manual gas valve in the gas piping to the appliance.
3. On Models 400 - 500 loosen the set screw one (1) full turn from inside the pressure tap on top of the gas valve. On Models 650 - 1000 remove the 1/8" (3 mm) pipe plug on the inlet flange to the valve and install a suitable 1/8" (3 mm) fitting (field supplied) for the manometer tubing. Place the tubing of the manometer over the tap once the set screw is loosened or the 1/8" (3 mm) fitting is installed (depending on model) as shown in FIG.'s 8-4 thru 8-5.
4. Slowly turn on the gas supply at the field installed manual gas valve.
5. Turn the power switch to the "ON" position.
6. Adjust the temperature set point on the display of the SMART TOUCH control module to call for heat.
7. Observe the gas supply pressure as the burner fires at 100% of rated input. Percent of burner input will be displayed on the display.
8. Ensure inlet pressure is within specified range. Minimum and maximum gas supply pressures are specified in this section of the manual.
9. If gas supply pressure is within normal range and no adjustments are needed, proceed on to Step 11.
10. If the gas pressure is out of range, contact the gas utility, gas supplier, qualified installer or service agency to determine the necessary steps to provide proper gas pressure to the control.
11. Turn the power switch to the "OFF" position.
12. Shut off the gas supply at the manual gas valve in the gas piping to the appliance.
13. Remove the manometer from the pressure tap on top of the gas valve. On Models 400 - 500 re-tighten the set screw inside the pressure tap. On Models 650 - 1000 remove the 1/8" (3 mm) field supplied fitting and reinstall the pipe plug removed in Step 3.

8 Gas connections *(continued)*

⚠ WARNING When re-tightening the set screw, be sure to tighten securely to prevent gas leaks.

Do not check for gas leaks with an open flame -- use the bubble test. Failure to use the bubble test or check for gas leaks can cause severe personal injury, death, or substantial property damage.

14. Turn on the gas supply at the manual gas valve.
15. Turn the power switch to the "ON" position.
16. Adjust the temperature set point on the display of the SMART TOUCH control module to the desired water temperature so the appliance will call for heat.
17. Check burner performance by cycling the system while you observe burner response. The burner should ignite promptly. Flame pattern should be stable. Turn system off and allow burner to cool, then cycle burner again to ensure proper ignition and flame characteristics.

Figure 8-4 *Inlet Gas Supply Check - Model 400 - 500*

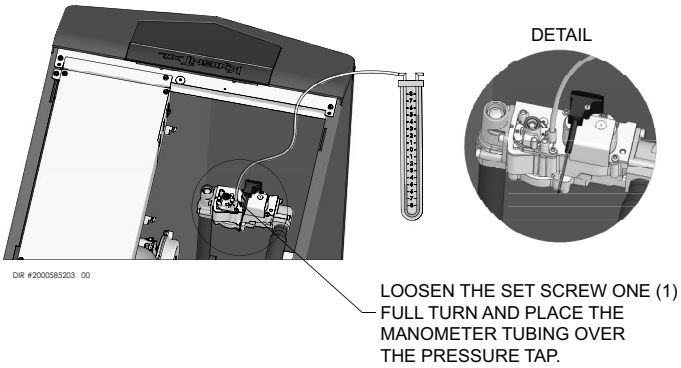

Figure 8-5 *Inlet Gas Supply Check - Models 650 - 1000*

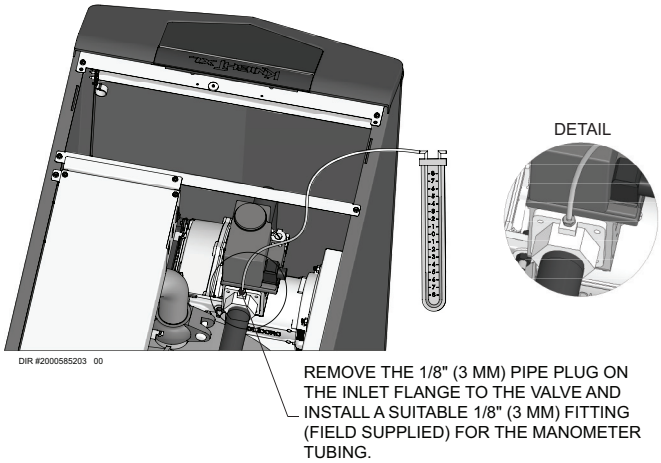

Gas pressure

The gas pressure must remain between 4 inches w.c. (.99 kPa) minimum and 14 inches w.c. (3.5 kPa) maximum for Natural gas and between 8 inches w.c. (1.9 kPa) minimum and 14 inches w.c. (3.2 kPa) maximum for LP gas during standby (static) mode and while in operating (dynamic) mode. If an in-line regulator is used, it must be a minimum of 10 feet (3 m) from the Knight XL boiler. It is very important that the gas line is properly purged by the gas supplier or utility company. Failure to properly purge the lines or improper line sizing, will result in ignition failure.

The problem is especially noticeable in NEW LP installations and also in empty tank situations. This can also occur when a utility company shuts off service to an area to provide maintenance to their lines.

Gas valve replacement

The gas valve MUST NOT be replaced with a conventional gas valve under any circumstances. As an additional safety feature, this gas valve has a flanged connection to the venturi and blower.

⚠ WARNING Failure to follow all precautions could result in fire, explosion, or death!

⚠ WARNING DO NOT adjust gas valve outlet pressure. Attempting to alter the gas valve outlet pressure could result in damage to the valve, causing potential severe personal injury, death, or substantial property damage.

9 Field wiring

⚠ WARNING ELECTRICAL SHOCK HAZARD – For your safety, turn off electrical power supply before making any electrical connections to avoid possible electric shock hazard. Failure to do so can cause severe personal injury or death.

NOTICE Wiring must be N.E.C. Class 1.

If original wiring as supplied with boiler must be replaced, use only type 105°C wire or equivalent.

Boiler must be electrically grounded as required by National Electrical Code ANSI/NFPA 70 – latest edition.

⚠ CAUTION Label all wires prior to disconnection when servicing controls. Wiring errors can cause improper and dangerous operation.

Figure 9-1 *Line Voltage Field Wiring Connections*

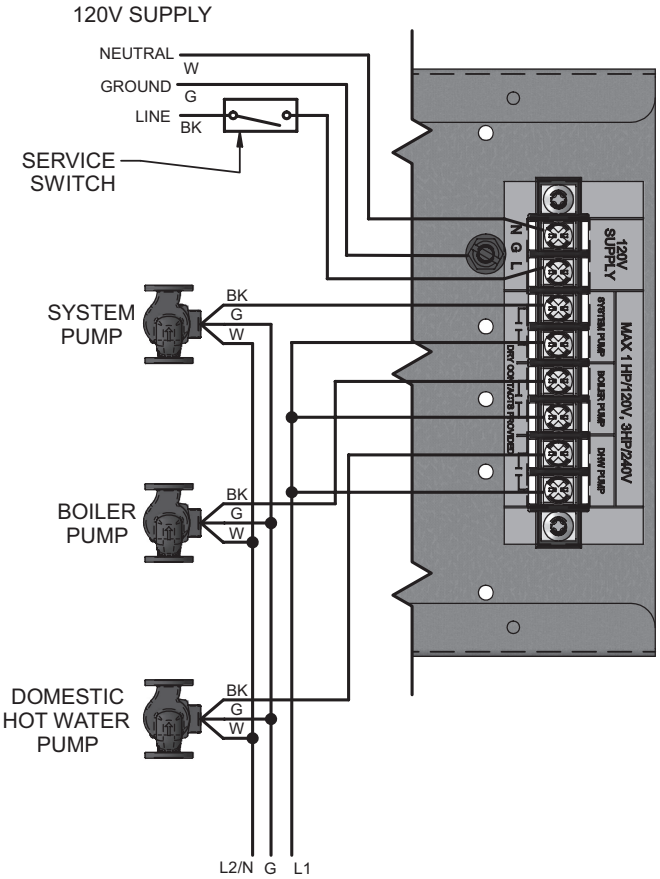

Installation must comply with:

1. National Electrical Code and any other national, state, provincial, or local codes, or regulations.
2. In Canada, CSA C22.1 Canadian Electrical Code Part 1, and any local codes.

Line voltage connections

1. Connect 120 VAC power wiring to the line voltage terminal strip in the junction box, as shown in FIG. 8-1.
2. Provide and install a fused disconnect or service switch (15 amp recommended) as required by the code (see FIG. 9-1).
3. When connecting a domestic hot water (DHW) pump, connect the wiring to the line voltage terminal strip as shown in FIG. 9-1.
4. To activate a system pump, wire as shown in FIG. 9-1. Dry contacts are sized for 1 hp/120V, 3 hp/240V or 30 amps.

Low voltage connections

1. Route all low voltage wires through the knockouts in the rear of the boiler, as shown in FIG. 9-2.
2. Connect low voltage wiring to the low voltage connection board as shown in FIG. 9-3 and the boiler wiring diagram.

Figure 9-2 *Routing Field Wiring*

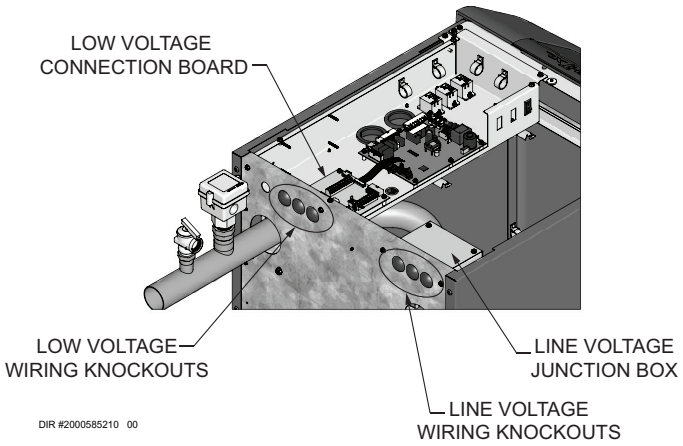

9 Field wiring *(continued)*

Thermostat

1. Connect the room thermostats or end switches (isolated contact only) to heat/loop demand 1, 2, or 3, as shown in FIG. 9-3.
2. Install the thermostat on the inside wall away from influences of drafts, hot or cold water pipes, lighting fixtures, television, sunlight, or fireplaces.
3. Thermostat anticipator (if applicable):
   a. If connected directly to boiler, set for 0.1 amps.
   b. If connected to relays or other devices, set to match total electrical power requirements of connected devices. See device manufacturers' specifications and thermostat instructions for details.

Outdoor temperature sensor

1. Mount the sensor on a north facing exterior wall, shielded from direct sunlight or flow of heat or cooling from other sources.
2. Route sensor wires through a knockout at the rear of the boiler (see FIG. 9-2).
3. Connect the outdoor temperature sensor (FIG. 9-3) to the outdoor sensor terminals on the connection board to enable outdoor reset operation of the Knight XL. If fixed temperature operation is required, do not install outdoor sensor.

DHW (Domestic Hot Water) thermostat

Connect storage indirect water heater (DHW) thermostat (FIG. 9-3) to the DHW thermostat terminals on the connection board. If a tank sensor is connected (see DHW Tank Sensor below) the tank thermostat is ignored.

DHW tank sensor

By installing a tank sensor, the SMART TOUCH control can perform the tank thermostat function. The SMART TOUCH control automatically detects the presence of this sensor, and generates a DHW call for heat when the tank temperature drops 6°F (3°C) below the tank set point, and finishes the call for heat when the tank temperature reaches the tank set point. The tank sensor included with the Lochinvar Squire® indirect DHW tanks (100170544) is the only sensor suitable for use with the SMART TOUCH control. Connect the sensor leads to the Tank Sensor terminals on the low voltage connection board (FIG. 9-3).

⚠ WARNING Failure to use the correct sensor may result in the tank temperature being either above or below the set point.

If 100170544 is not compatible with the indirect tank, a tank thermostat can be used to control the boiler. The tank thermostat should be installed per the manufacturer's instructions and wired to the DHW Thermostat terminals on the low voltage connection board (FIG. 9-3).

Louver proving switch

1. When the operation of the louvers needs to be verified before the boiler fires, remove the jumper wire from these terminals and connect them to the normally open contacts on its proving switch (FIG. 9-3).

High gas pressure switch

1. If a switch is provided to detect excessive gas pressure, remove the jumper wire from the terminals on the connection board, and then connect them to its normally closed contacts (FIG. 9-3).

Low gas pressure switch

1. If a switch is provided to detect low gas pressure, remove the jumper wire from the terminals on the connection board and connect them to its normally open contacts (FIG. 9-3).
2. If both a high and low gas pressure switch is used, connect their respective contacts in series, and connect them to the terminals on the connection board (FIG. 9-3).

Variable speed system pump

If a variable speed pump is used in the primary loop, and a 0-10V signal is available from the pump speed control, this signal can be used by the SMART TOUCH control to anticipate changes in the building heat load. By connecting this 0 - 10V signal to the 0 - 10V SYS PUMP IN terminals, the boiler (or cascade) can modulate up and down as the primary flow increases and decreases.

Boiler pump speed output

This 0 - 10V output is available to control the speed of a variable speed boiler pump. The SMART TOUCH control will vary the speed of this pump in order to maintain a minimum ΔT across the heat exchanger, as well as prevent high limit lockouts when the flow in the primary loop is extremely low. Connect this output to the 0 - 10V input on the boiler pump speed control.

Rate output

This output provides a 0 - 10V signal that is proportional to the firing rate of the boiler. This may be used by a BMS system to monitor the actual rate of the boiler.

9 Field wiring

Modbus / BACnet

When the optional ModBus / BACnet interface module is installed, the RS-485 ModBus / BACnet cable is connected to these terminals. Use shielded, 2-wire twisted pair cable. If desired, the shield can be connected to ground by installing a jumper wire between terminals 1 and 3 on connector X5 on the optional ModBus / BACnet interface module.

System supply sensor

1. By installing the system supply sensor into the supply of the primary loop, the temperature of the system supply can be controlled. The SMART TOUCH control automatically detects the presence of this sensor, and controls the boiler firing rate to maintain the system supply temperature to the set point (if the outlet sensor control is currently selected). See the Knight XL Service Manual for instructions on how to use the inlet sensor as the controlling sensor. When the inlet sensor is programmed as the controlling sensor, it is vital that the SYSTEM SUPPLY sensor be installed. DO NOT INSTALL THE SYSTEM SUPPLY SENSOR INTO THE SYSTEM RETURN.

2. The 100170581 sensor provided with the boiler must be used for the system sensor.

3. Connect these terminals to the system supply sensor (FIG. 9-3).

Boiler management system

1. An external control may be connected to control either the firing rate or the set point of the boiler. If the external control uses a set of contacts to enable the boiler, connect the contacts to the heat/loop demand 1 terminals. Otherwise, the SMART TOUCH control will be enabled by the 0-10V signal.

2. Make sure the (-) terminal is connected to the (-) or common output terminal of the external control, and the (+) terminal is connected to the 0 - 10 VDC or (+) terminal of the external control. Make sure that the (-) voltage is not below ground.

Runtime contacts

The SMART TOUCH control closes a set of dry contacts whenever the burner is running. This is typically used by Building Management Systems to verify that the boiler is responding to a call for heat.

Alarm contacts

The SMART TOUCH control closes another set of contacts whenever the boiler is locked out or the power is turned off. This can be used to turn on an alarm, or signal a Building Management System that the boiler is down.

Wiring of the cascade

When wiring the boilers for Cascade operation, select one boiler as the Leader boiler. The remaining boilers will be designated as Members. See “Configuration of the Cascade” for a detailed explanation of this procedure.

Connect the system supply sensor and outdoor air sensor (if used) to the Leader boiler. For the Cascade system to work properly the system supply sensor must be installed. The location of the system supply sensor should be downstream of the boiler connections in the main system loop (FIG. 7-4 through 7-8). The system supply sensor should be wired to the low voltage connection board at the terminals marked for the system sensor (see FIG. 9-3). The Leader control will use the water temperature at the system supply sensor to control the operation of the Cascade.

If outdoor air reset is desired, the outdoor air sensor should be wired to the low voltage connection board at the terminals marked for the outdoor air sensor (FIG. 9-3). If the outdoor air sensor is connected, the Leader control will calculate the water temperature set point based on the programmed reset curve parameters. If the outdoor air sensor is not connected, the Leader control will maintain the fixed water temperature set point that is programmed into the control.

If a Thermostat or Zone Control enable output is available, it should be wired to the low voltage connection board on the Leader boiler at the terminals marked for one of the heat/loop demands 1-3 (FIG. 9-3). If the boilers are to run continuously, connect a jumper wire between the R and W terminals for the heat/loop demand input. This will initiate a call for heat on the Cascade.

Communication between the Leader boiler and the Member boilers is accomplished by using shielded, 2-wire twisted pair communication cable. Connect one of the twisted pair wires to Cascade terminal A on each of the low voltage connection boards, and the other wire of the twisted pair to Cascade terminal B on each of the low voltage connection boards. Connect the shield wires to one of the shield terminals on the low voltage connection boards (FIG. 9-3). If more than two boilers are on the Cascade, daisy chain the wiring from the Cascade terminals on the second boiler to the Cascade terminals on the third boiler, then from the third to the forth, and so on. The connections between boilers can be made in any order, regardless of the addresses of the boilers. Try to keep each cable as short as possible.

9 Field wiring *(continued)*

Figure 9-3 *Low Voltage Field Wiring Connections*

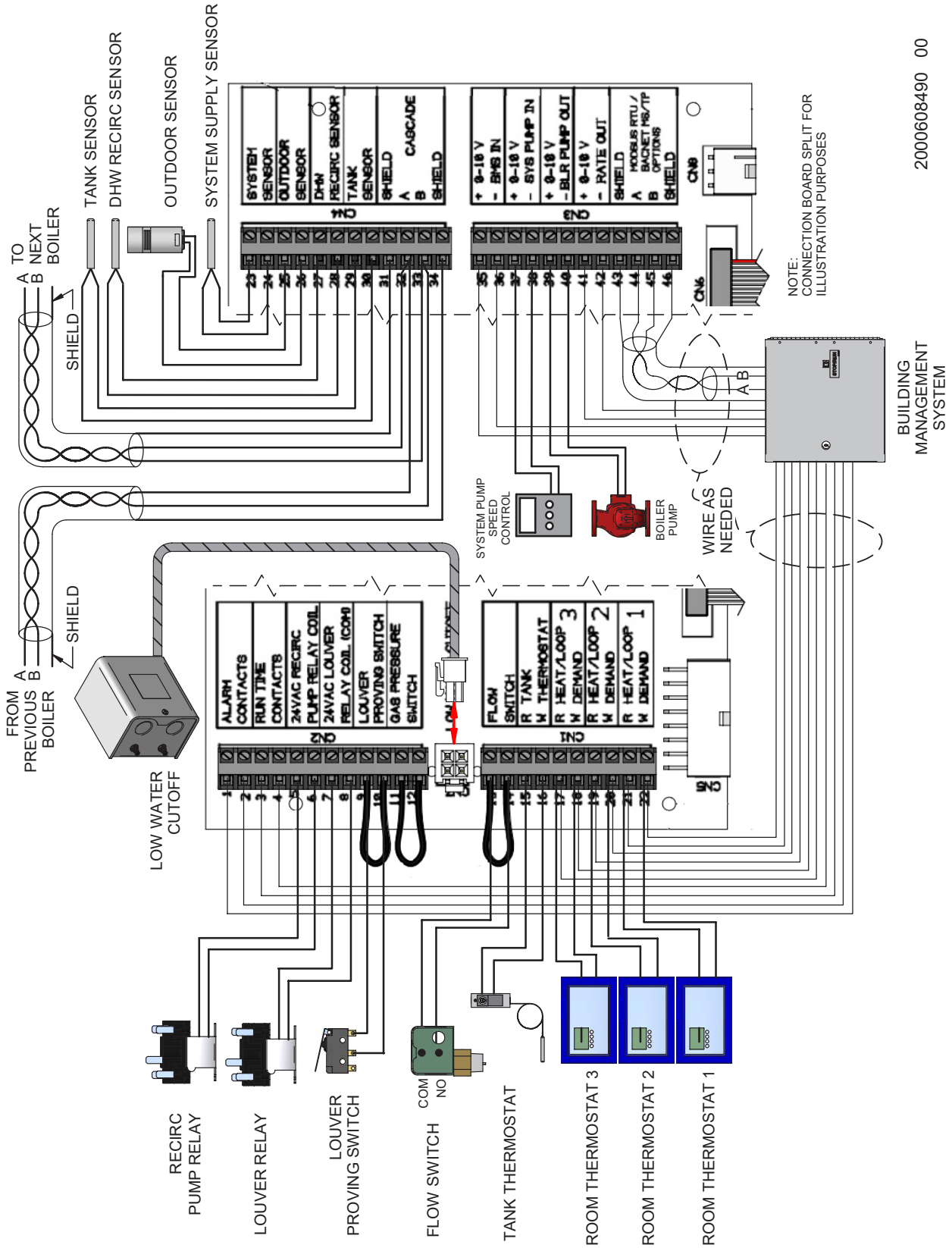

10 Condensate disposal

Condensate drain

1. This boiler is a high efficiency appliance that produces condensate.
2. The boiler has a 1/2 inch (12.7 mm) PVC union for connection of a 1/2 inch (12.7 mm) PVC pipe (FIG. 10-1).
3. Slope condensate tubing down and away from the boiler into a drain or condensate neutralizing filter. Condensate from the Knight XL will be slightly acidic (typically with a pH from 3 to 5). Install a neutralizing filter if required by local codes.

   A Neutralizer Kit (FIG. 10-1) is available from the factory.
4. Do not expose condensate line to freezing temperatures.
5. Use only plastic tubing or piping as a condensate drain line (FIG. 10-1).
6. A condensate removal pump is required if the boiler is below the drain. When installing a condensate pump, select one approved for use with condensing boilers and furnaces. The pump should have an overflow switch to prevent property damage from condensate spillage. The switch should be wired in series with the blocked drain switch inside the boiler (see FIG. 11-1).

NOTICE Use materials approved by the authority having jurisdiction. In the absence of other authority, PVC and CPVC pipe must comply with ASTM D1785 or D2845. Cement and primer must comply with ASME D2564 or F493. For Canada use CSA or ULC certified PVC or CPVC pipe, fittings, and cement.

NOTICE To allow for proper drainage on large horizontal runs, a second line vent may be required and tubing size may need to increase to 1 inch (25 mm).

The condensate line must remain unbstructed, allowing free flow of condensate. If condensate is allowed to freeze in the line or if the line is obstructed in any other manner, condensate can exit from the boiler tee, resulting in potential water damage to property.

Figure 9-1 *Condensate Disposal*

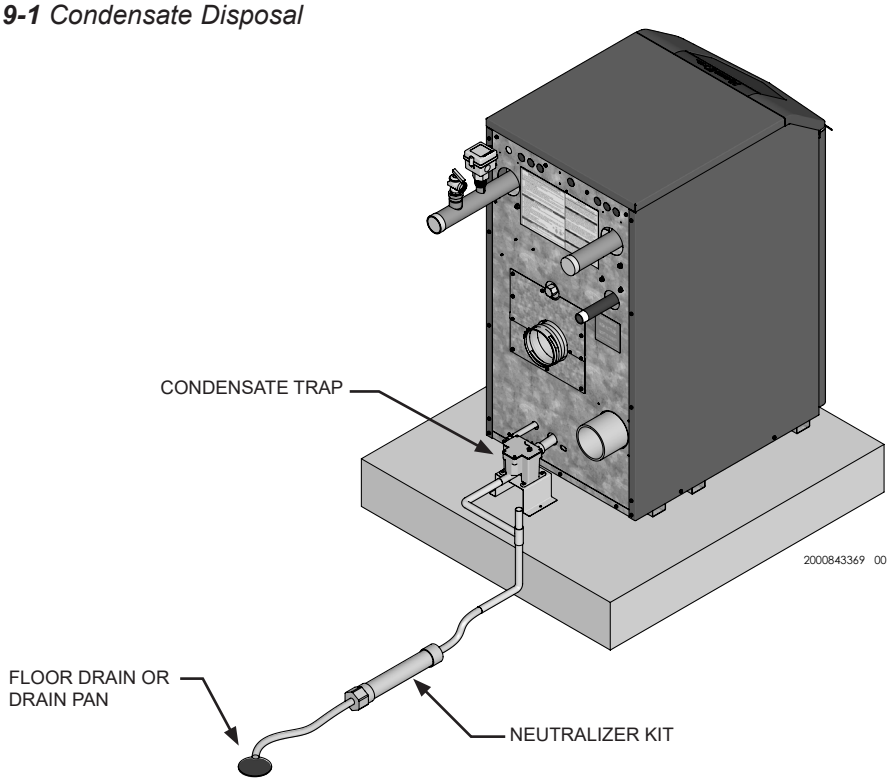

NOTE: Neutralizer shown for illustrative purposes only. Actual neutralizer may vary.

11 Start-up

Pre-Commissioning Cleaning

1. Prior to fill and start-up, flush the entire heating system.
2. Clean the entire heating system with an approved pre-commissioning cleaner (comparable to Sentinel X300 or Fernox F3) in accordance with the manufacturer's recommendation to remove debris and prolong the life of the heat exchanger.
3. Clean all water filtering devices in the system.
4. Flush the cleaning solution out of the entire system and refill.

Fill water

Check/control fill water chemistry

IMPORTANT Conduct water quality testing prior to installing the appliance. Various solutions are available to adjust water quality.

The manufacturer recommends the following for properly filling your boiler with the appropriate water chemistry for closed loop boilers. Good fill water quality will help extend the life of the appliance by reducing the effects of lime scale buildup and corrosion in closed loop systems.

Hardness between 5 and 12 grains per gallon

1. Consult local water treatment companies for hard water areas (above 12 grains per gallon hardness).
2. Hardness levels that are above 12 grains/gallon can lead to lime scale buildup throughout the boiler system. If the fill water is below 5 grains/gallons, usually due to use of a water softener, it is recommended to mix in some potable water at the inlet to increase the hardness of the water to above 5 grains/gallons.

pH between 6.5 and 8.5

1. pH levels below 6.5 can cause an increase in the rate of corrosion. pH of 8.5 or higher can potentially cause lime scale buildup.

Total Dissolved Solids (TDS) less than 350 ppm

1. Total dissolved solids are all minerals, salts, metals, and charged particles that are dissolved in water.
2. The greater the amounts of TDS present, the higher the corrosion potential due to increased conductivity in the water.

Chlorine concentration less than 150 ppm

1. Do not fill boiler or operate with water containing chlorine in excess of 150 ppm.
2. Filling with fresh drinking water should be acceptable.
3. Do not use the boiler to directly heat swimming pool or spa water.

Boiler water

CAUTION Do not use petroleum based cleaning or sealing compounds in the boiler system. Gaskets and seals in the system may be damaged. This can result in substantial property damage.

DO NOT use "homemade cures" or "boiler patent medicines". Serious damage to boiler, personnel, and/or property may result.

Table 11A *Boiler Water Chemistry*

BOILER WATER CHEMISTRY	
Specification	**Range**
Dissolved Solids	< 2000 ppm
pH Level	6.5 to 9.5
Chloride	< 150 ppm

- Monitoring pH, chlorides, TDS, and hardness levels can prolong the life of the appliance by reducing lime scale buildup, corrosion, and erosion. Check for leaks to ensure that fresh water is not entering the system.
- Continual fresh makeup water will reduce boiler life.
- Mineral buildup in the heat exchanger reduces heat transfer, overheats the stainless steel heat exchanger, and causes failure.
- The addition of oxygen carried in by makeup water can cause internal corrosion in system components.
- Leaks in the boiler or piping must be repaired at once to prevent excessive makeup water. For this purpose, it is recommended to install a water meter to easily check the amount of makeup water entering the system. Makeup water volume should not exceed 5% of the total system volume per year. NOTE: When makeup water is added, make sure the chemical additives are added to maintain the correct level.
- An approved multi-metal corrosion inhibitor (comparable to Sentinel X100 or Fernox F1) is recommended at the correct concentration and in the manner recommended by the manufacturer.

Freeze protection fluids

⚠ WARNING Ethylene glycol is toxic, DO NOT use as your freeze protection. Ethylene glycol has a sweet aroma which children and pets could mistake as food and ingest; leading to death.

11 Start-up

1. Use glycol only if needed for freeze protection fluid.
2. Propylene glycol is the recommended freeze protection fluid.
3. Make sure to flush the boiler system before adding glycol.
4. Determine the freeze protection fluid quantity using system water content, following the fluid manufacturer's instructions. Boiler water content is listed on page 7. Remember to include expansion tank water content.
5. Local codes may require a backflow preventer or actual disconnect from city water supply.
6. When using freeze protection fluid with automatic fill, it is suggested to install a water meter to monitor water makeup. Freeze protection fluid may leak before the water begins to leak, causing the concentration to drop, which reduces the freeze protection level.
7. The freeze protection set points may be lowered when freeze protection fluid is used (see the Knight XL Service Manual).
8. Consult the glycol manufacturer for details on the suggested mix of glycol and water for the desired freeze protection level and the de-rate effect it will have on the boiler output.

Test / replace freeze protection fluid

1. For systems using freeze protection fluids, follow the fluid manufacturer's instructions.
2. Freeze protection fluid must be replaced periodically due to degradation of inhibitors over time.
3. It is recommended to test the glycol concentration annually and adjust within the desired set points.

Oxygen prevention

CAUTION Eliminate all system leaks. Continual fresh makeup water will reduce boiler life. Minerals can build up in the heat exchanger, reducing heat transfer, overheating the heat exchanger, and causing heat exchanger failure.

Dissolved oxygen can have a negative effect on the boiler system. Oxygen can cause iron oxide to generate iron deposits. Oxygen may also increase the rate of corrosion on non-stainless steel parts of the system. A low pH level combined with oxygen further enhances its corrosive effects. After boiler installation, check for air leaks in the following areas:

- Suction gasket
- Pump
- Air valve
- O-ring gaskets

Precautions include installing a water meter to evaluate the fresh water volume entering the system (should be no more than 5% system volume). Additional volumes of fresh water could indicate that a leak is present.

Fill and test water system

1. Fill system only after ensuring the water meets the requirements of this manual.
2. Close automatic and manual air vents and boiler drain valve.
3. Fill to correct system pressure. Correct pressure will vary with each application.
   a. The minimum cold water fill pressure for a system is 12 psi.
   b. Pressure will rise when the boiler is turned ON and system water temperature increases.
4. At initial fill and during boiler startup and testing, check the system thoroughly for any leaks. Repair all leaks before proceeding further.

Purge air from water system

1. Purge air from system:
   a. Connect a hose to the purge valve (see purge/drain valve in the piping diagrams in this manual). Route the hose to an area where water can drain and be seen.
   b. Close the boiler or system isolation valve between the purge valve and fill connection to the system.
   c. Close zone isolation valves.
   d. Open the quick-fill valve on the cold water makeup line.
   e. Open purge valve.
   f. Open the isolation valves one zone at a time. Allow water to run through the zone, pushing out the air. Run until no noticeable air flow is present. Close the zone isolation valves and proceed with the next zone. Follow this procedure until all zones are purged.
   g. Close the quick-fill water valve and purge valve and remove the hose. Open all isolation valves. Watch that system pressure rises to correct cold-fill pressure.
   h. After the system has operated for a while, eliminate any residual air by using the manual air vents located throughout the system.
   i. If purge valves are not installed in the system, open the manual air vents in the system one at a time, beginning with the lowest floor. Close the vent when water squirts out. Repeat with remaining vents.
2. Open the automatic air vent (diaphragm-type or bladder type expansion tank systems only) one turn.
3. Open other vents:
   a. Starting on the lowest floor, open air vents one at a time until water squirts out.
   b. Repeat with remaining vents.
4. Refill to correct pressure.

11 Start-up *(continued)*

Check for gas leaks

⚠ WARNING Before starting the boiler, and during initial operation, smell near the floor and around the boiler for gas odorant or any unusual odor. Remove the top access panel and smell the interior of the boiler enclosure. Do not proceed with startup if there is any indication of a gas leak. Use an approved leak detection solution. Repair any leaks at once.

⚠ WARNING DO NOT adjust gas valve outlet pressure. The gas valve is factory set for the correct outlet pressure. This setting is suitable for natural gas and propane, requiring no field adjustment. Attempting to alter the gas valve outlet pressure could result in damage to the valve, causing potential severe personal injury, death, or substantial property damage.

⚠ WARNING Propane boilers only – Your propane supplier mixes an odorant with the propane to make its presence detectable. In some instances, the odorant can fade, and the gas may no longer have an odor. Before startup (and periodically thereafter), have the propane supplier verify the correct odorant level in the gas.

Check thermostat circuit(s)

1. Disconnect the two external wires connected to each of the heat/loop demand terminals on the connection board.
2. Connect a voltmeter across these two incoming wires. Close each thermostat, zone valve, and relay in the external circuit one at a time and check the voltmeter reading across the incoming wires.
3. There should NEVER be a voltage reading.
4. If a voltage does occur under any condition, check and correct the external wiring. (This is a common problem when using 3-wire zone valves.)
5. Once the external thermostat circuit wiring is checked and corrected if necessary, reconnect the external thermostat circuit wires to the connection board. Allow the boiler to cycle.

11 Start-up

Condensate drain

1. This boiler is a high efficiency appliance that produces condensate.
2. The provided condensate trap is equipped with a ball that acts as a seal against harmful flue gases escaping in case there is no condensate in the trap. If this ball is not present, flue gases may be able to pass through the trap when there is no condensate present, resulting in an unsafe environment. It is important to check and make sure the ball is located in the trap, acting as a seal against flue gases.
3. Connect the condensate trap to the condensate hoses located on the back of the unit hear the bottom. Use the hose clamps to secure the connection. Connect the two-pin molex provided with the condensate trap to the mating connector on the rear of the boiler.
4. Slope condensate tubing down and away from the boiler into a drain or condensate neutralizing filter. Condensate from the Knight XL boiler will be slightly acidic (typically with a pH from 3 to 5). Install a neutralizing filter if required by local codes.

   A Neutralizer Kit is available from the factory.
5. Do not expose condensate line to freezing temperatures.
6. Use only plastic tubing or piping as a condensate drain line (FIG. 11-1).
7. A condensate removal pump is required if the boiler is below the drain. When installing a condensate pump, select one approved for use with condensing boilers and furnaces. The pump should have an overflow switch to prevent property damage from condensate spillage. The switch should be wired in series with the air pressure switch inside the boiler.

NOTICE Use materials approved by the authority having jurisdiction. In the absence of other authority, PVC and CPVC pipe must comply with ASTM D1785 or D2845. Cement and primer must comply with ASME D2564 or F493. For Canada use CSA or ULC certified PVC or CPVC pipe, fittings, and cement.

NOTICE To allow for proper drainage on large horizontal runs, a second line vent may be required and tubing size may need to increase to 1 inch.

The condensate line must remain unobstructed, allowing free flow of condensate. If condensate is allowed to freeze in the line or if the line is obstructed in any other manner, condensate can exit from the condensate trap vent opening, resulting in potential water damage to property.

⚠ WARNING The condensate trap must have the float ball (FIG. 11-1) in place during all times of boiler operation to avoid flue gas emission from the condensate drain line. Failure to ensure the float ball is in place could result in severe personal injury or death.

Figure 11-1 *Condensate Trap*

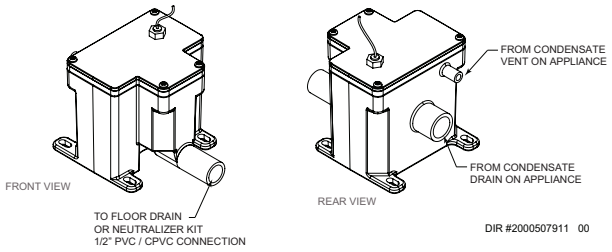

11 Start-up *(continued)*

Final checks before starting the boiler

- ❑ Read the Knight XL Boiler Service Manual to familiarize yourself with SMART TOUCH control module operation. Read the preceding Startup sections in this manual, for proper steps to start the boiler.
- ❑ Verify the preparation procedures have been completed.
- ❑ Verify the boiler and system are full of water and all system components are correctly set for operation.
- ❑ Verify electrical connections are correct and securely attached.
- ❑ Inspect vent piping and air piping for signs of deterioration from corrosion, physical damage, or sagging. Verify air piping and vent piping are intact and correctly installed per this manual.

Start the boiler

1. Read and follow the Operating instructions in FIG. 11-2,.

If boiler does not start correctly

1. Check for loose connections, blown fuse or service switch off?
2. Is boiler water temperature above 200°F (93°C)?
3. Is thermostat set below room temperature?
4. Is gas turned on at meter or boiler?
5. Is incoming gas pressure less than 4 inches w.c. (.99 kPa)?

If none of the above corrects the problem, refer to the Troubleshooting Section of the Knight XL Service Manual.

Check system and boiler

❑ Check water piping

1. Check system piping for leaks. If found, shut down the boiler and repair immediately. (See WARNINGS on pages 57 through 59 (start-up) regarding failure to repair leaks.)
2. Vent any remaining air from the system using manual vents. Air in the system will interfere with circulation and cause heat distribution problems and noise.

❑ Check vent piping and air piping

1. Check for gastight seal at every connection, seam of air piping, and vent piping.

⚠ WARNING Venting system must be sealed gastight to prevent flue gas spillage and carbon monoxide emissions, which will result in severe personal injury or death.

❑ Check gas piping

1. Check around the boiler for gas odor following the procedure on page 48 of this manual (connecting gas supply piping).

⚠ WARNING If you discover evidence of any gas leak, shut down the boiler at once. Find the leak source with a bubble test and repair immediately. Do not start the boiler again until corrected. Failure to comply could result in severe personal injury, death, or substantial property damage.

❑ Propane boilers – verify conversion

1. Verify propane conversion has been completed per the Propane Conversion instructions.

⚠ WARNING DO NOT adjust gas valve outlet pressure. The gas valve is factory-set for the correct outlet pressure. This setting is suitable for natural gas and propane, requiring no field adjustment. Attempting to alter the gas valve outlet pressure could result in damage to the valve, causing potential severe personal injury, death, or substantial property damage.

⚠ WARNING Knight XL boilers are typically shipped ready to fire on natural gas. Check boiler rating plate to determine which fuel the boiler is set for. If set to natural gas, it may be converted to LP by installing an LP venturi and making a gas valve adjustment (see pages 13 and 14). In order to operate on LP gas, an LP venturi MUST BE installed and a gas valve adjustment MUST BE made. Failure to comply could result in severe personal injury, death, or substantial property damage.

Check flame and combustion

1. Turn the main power off to the boiler by placing the "On/Off" switch in the OFF position.
2. Remove the flue temperature sensor from the flue pipe connection. ***NOTE:*** Combustion measurements will be made at this point.
3. Turn the main power on to the boiler by placing the "On/Off" switch in the ON position.

11 Start-up

Figure 11-2 *Operating Instructions*

FOR YOUR SAFETY READ BEFORE OPERATING

WARNING: If you do not follow these instructions exactly, a fire or explosion may result causing property damage, personal injury, or loss of life.

A. This appliance does not have a pilot. It is equipped with an ignition device which automatically lights the burner. Do not try to light the burner by hand.

B. BEFORE OPERATING smell all around the appliance area for gas. Be sure to smell next to the floor because some gas is heavier than air and will settle on the floor.

WHAT TO DO IF YOU SMELL GAS

- Do not try to light any appliance.
- Do not touch any electric switch; do not use any phone in your building.
- Immediately call your gas supplier from a neighbor's phone. Follow the gas supplier's instructions.
- If you cannot reach your gas supplier, call the fire department.

C. Use only your hand to turn the gas control knob. Never use tools. If the handle will not turn by hand, don't try to repair it, call a qualified service technician. Force or attempted repair may result in a fire or explosion.

D. Do not use this appliance if any part has been under water. Immediately call a qualified service technician to inspect the appliance and to replace any part of the control system and any gas control which has been under water.

OPERATING INSTRUCTIONS

1. **STOP!** Read the safety information above on this label.
2. Set the thermostat to lowest setting.
3. Turn off all electric power to the appliance.
4. This appliance is equipped with an ignition device which automatically lights the burner. Do not try to light the burner by hand.
5. Remove top cover.
6. Turn gas shutoff valve counterclockwise to "OFF". Handle will be perpendicular to pipe. Do not force.
7. Wait five (5) minutes to clear out any gas. If you then smell gas, **STOP!** Follow "B" in the safety information above on this label. If you don't smell gas, go to next step.
8. Turn gas shutoff valve clockwise to "ON". Handle will be parallel to pipe.
9. Install top cover.
10. Turn on all electric power to appliance.
11. Set thermostat to desired setting.
12. If the appliance will not operate, follow the instructions "To Turn Off Gas To Appliance" and call your service technician or gas supplier.

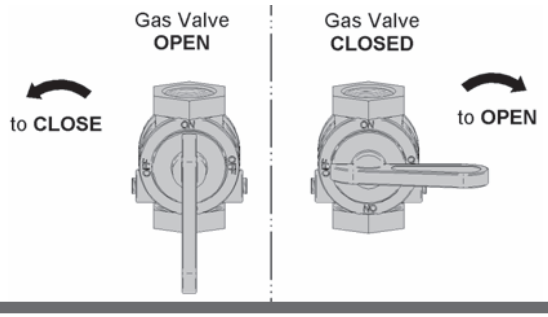

TO TURN OFF GAS TO APPLIANCE

1. Set the thermostat to lowest setting.
2. Turn off all electric power to the appliance if service is to be performed.
3. Remove top cover.
4. Turn gas shut off valve counterclockwise to "OFF". Handle will be perpendicular to pipe. Do not force.
5. Install top cover.

LBL2284 REV -

11 Start-up *(continued)*

Check flame and combustion *(continued)*

4. Navigate to the Setup Screen from the Home Screen by pressing the SETUP button along the left side of the screen. Enter the installer password.

5. Select the Service Maintenance Screen. The tabs will scroll (up and down) to reveal more options. See the Knight XL Service Manual for more detailed information.

6. Insert the probe from a combustion analyzer into the hole left by the removal of the flue temperature sensor.

7. Once the boiler has modulated up to full fire, measure the combustion. The values should be in the range listed in Table 11B below. The CO levels shall be less than 150 ppm for a properly installed unit.

   If the combustion is not within the specified range, reference the Troubleshooting Section of the Knight XL Service Manual for possible causes and corrective actions.

Table 11B *Flue Products Chart*

Natural Gas		Propane	
CO_2	O_2	CO_2	O_2
8.4% - 9.4%	4.8% - 6.5%	9.4% - 10.4%	5.4% - 6.9%

8. Once the combustion analysis is complete, test the safety shutoff device by turning the manual shutoff valve to the OFF position and ensuring that the boiler shuts down and registers an alarm. Turn the manual shutoff switch to the ON position and reset the control.

9. Turn the main power off to the boiler and replace the flue temperature sensor into the flue pipe connection.

10. Place the boiler back into normal operation.

⚠ WARNING You must replace the flue gas temperature sensor to prevent flue gas spillage into the room. Failure to comply could result in severe personal injury, death, or substantial property damage.

Set space heating operation

Determine controlling sensor

For space heating systems, the temperature control can be based on one of three sensors; the inlet, outlet, or system supply sensor. The SMART TOUCH control is programmed at the factory to control the temperature of the outlet sensor. The control will automatically switch to the system supply sensor once it is connected. If it is desired to base the temperature control on the inlet sensor, the appropriate parameter must be changed in the control. See the Knight XL Service Manual for a detailed explanation of this procedure.

Verify space heat circulator mode

The Space Heating Mode controls both the system pump (if connected), and the boiler pump. When the SMART TOUCH control receives a space heating call for heat, it turns on the system pump. If the boiler is not heating an indirect DHW (Domestic Hot Water) tank, and the set point is not met, it also turns on the boiler pump. After the space heating call for heat ends, the system pump continues to run for a short period of time. The system pump can be programmed to run continuously, except during outdoor shutdown. If the boiler pump was running, it continues to run for a short period of time as well. These pump delays are factory set to 30 seconds. If different delays are desired, the appropriate parameters in the control must be changed. See the Knight XL Service Manual for a detailed explanation of this procedure.

11 Start-up

Adjust set point temperature(s)

During normal operation, set point temperatures can be adjusted from the Home Screen by pressing the DETAILS button on the bottom of the screen (see FIG. 11-3).

1. To change a set point, use the set point slider feature or the PLUS (+) and MINUS (-) buttons to adjust the set points as shown in FIG. 11-3.
2. Once the set point has been adjusted to the desired setting, press the Door Menu slider (top left) or the Setup button.
3. Press the APPLY CHANGES button on the top of the screen.

NOTE: The APPLY CHANGES button must be pressed to complete programming of the controls. Failure to press the APPLY CHANGES button will result in an unprogrammed control. The Door Menu button will become highlighted when there are changes that can be applied.

Figure 11-3 *User Set Point Screen*

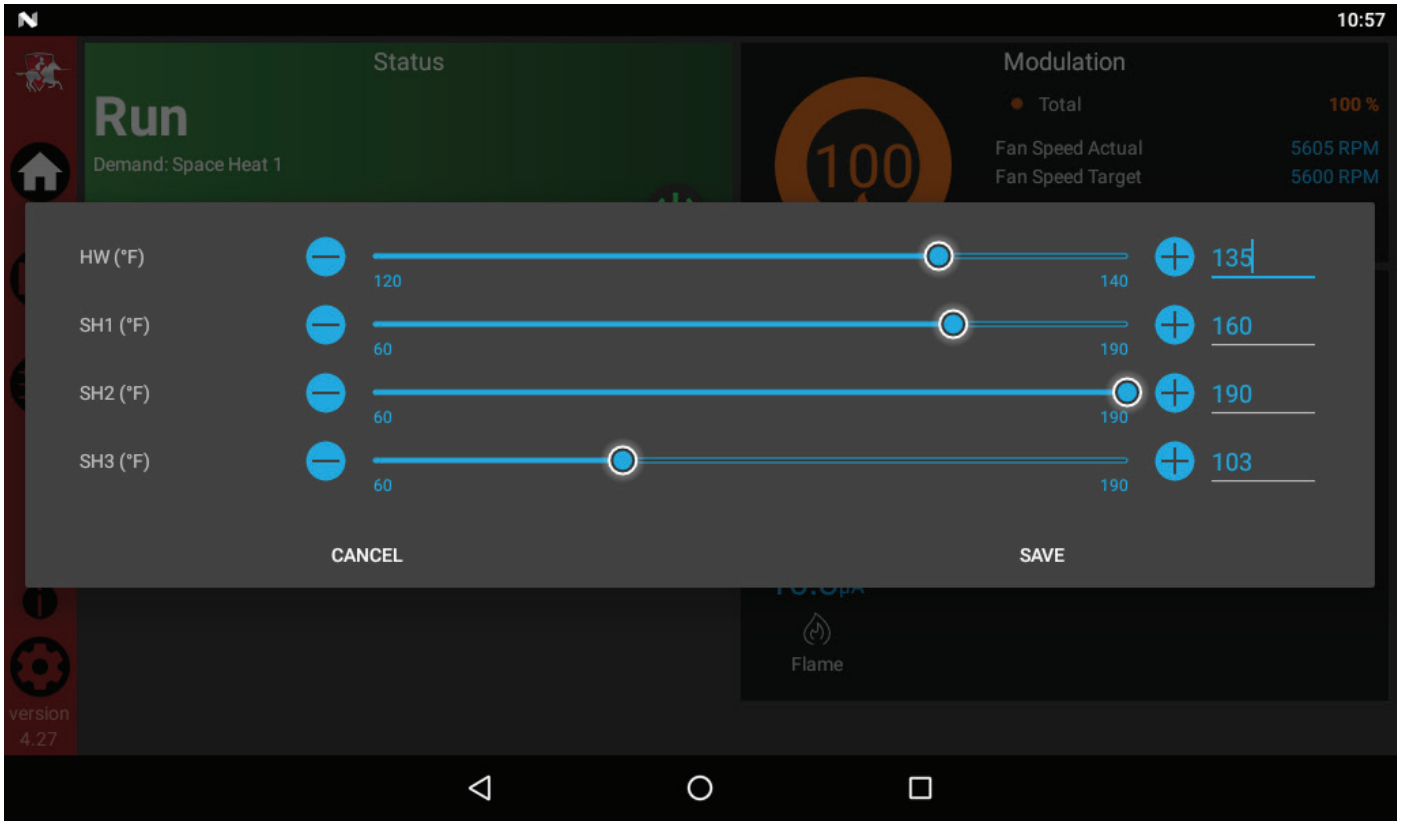

11 Start-up *(continued)*

Set domestic hot water (DHW) operation

Verify DHW mode

There are two (2) modes of operation for DHW. In Normal Mode, when a DHW demand begins, the control will start the DHW pump, turn off the boiler pump (if running), and modulate to bring the outlet temperature to the DHW boiler set point. The maximum firing rate may be limited in this mode if desired.

In Zone Mode it is assumed that the indirect DHW tank is piped as a zone on the primary loop. When a DHW demand begins, the control will turn on the DHW pump output, and raise the system temperature set point to the DHW boiler set point (if higher). The boiler pump will be turned on. The system pump may be forced on, forced off, or not changed, depending on the System Pump Mode selected (reference the Knight XL Service Manual for details). In this mode, any low temperature zones (such as radiant heating) may need additional controls to limit the water temperature sent to those zones.

Set DHW boiler target temperature

When in the DHW Mode, the control will modulate to maintain the boiler outlet temperature or system supply temperature to a set point. This set point is set at the factory to 180°F. If a different set point is desired, the appropriate parameter in the control must be changed. See the Knight XL Service Manual for a detailed explanation of this procedure.

Set maximum DHW fan speed

If the rated input of the indirect tank is less than the maximum output of the boiler, change the maximum DHW fan speed setting to limit the boiler output accordingly, see the Knight XL Service Manual for a detailed explanation of this procedure.

Set clock

The SMART TOUCH control has a built-in clock that it uses for its night setback feature and for logging events. This clock must be set when the appliance is installed and anytime the appliance has been powered off for more than one day. Use the following procedure to set the clock:

1. Press the SETTINGS button under the Lochinvar logo (see FIG. 8-1).
2. Press the SET button across from the date and time.
3. Proceed to set the date, time, and time zone. **NOTE:** Automatic Time Zone will not work.
4. Temperature units and WiFi may also be set here. These items may be used to automatically sync the time.
5. Press the Home, View, or Back button to exit.

Figure 11-4 *Rapid Setup Screen*

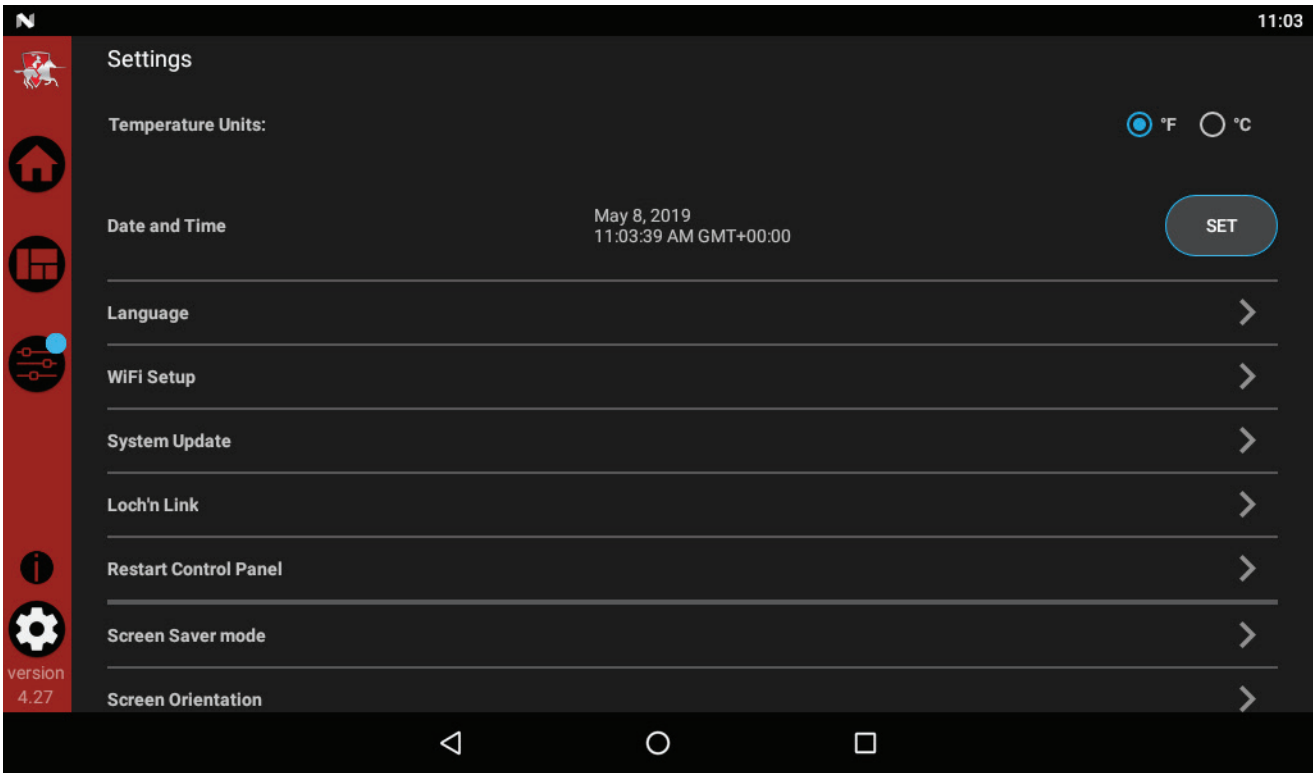

11 Start-up

Configuration of the cascade

NOTE: For more detailed instructions, please refer to the Knight XL Service Manual.

When installing a Cascade system, all units must be programmed for Cascade to operate. Access the Cascade Setup options as follows:

1. Press the SETUP button on the left side of the display screen.
2. Enter the installer password.
3. Select the Cascade option as shown in FIG. 11-5.
4. Each unit must have a unique address set. The leader has more options which are described in the Knight XL Service Manual.
5. Once all the updates are complete, press the Door Menu slider (top left) or the Setup button.
6. Press the APPLY CHANGES button on the top of the screen.

NOTE: The APPLY CHANGES button must be pressed to complete programming of the controls. Failure to press the APPLY CHANGES button will result in an unprogrammed control. The Door Menu button will become highlighted when there are changes that can be applied.

Figure 11-5 *Cascade Screen*

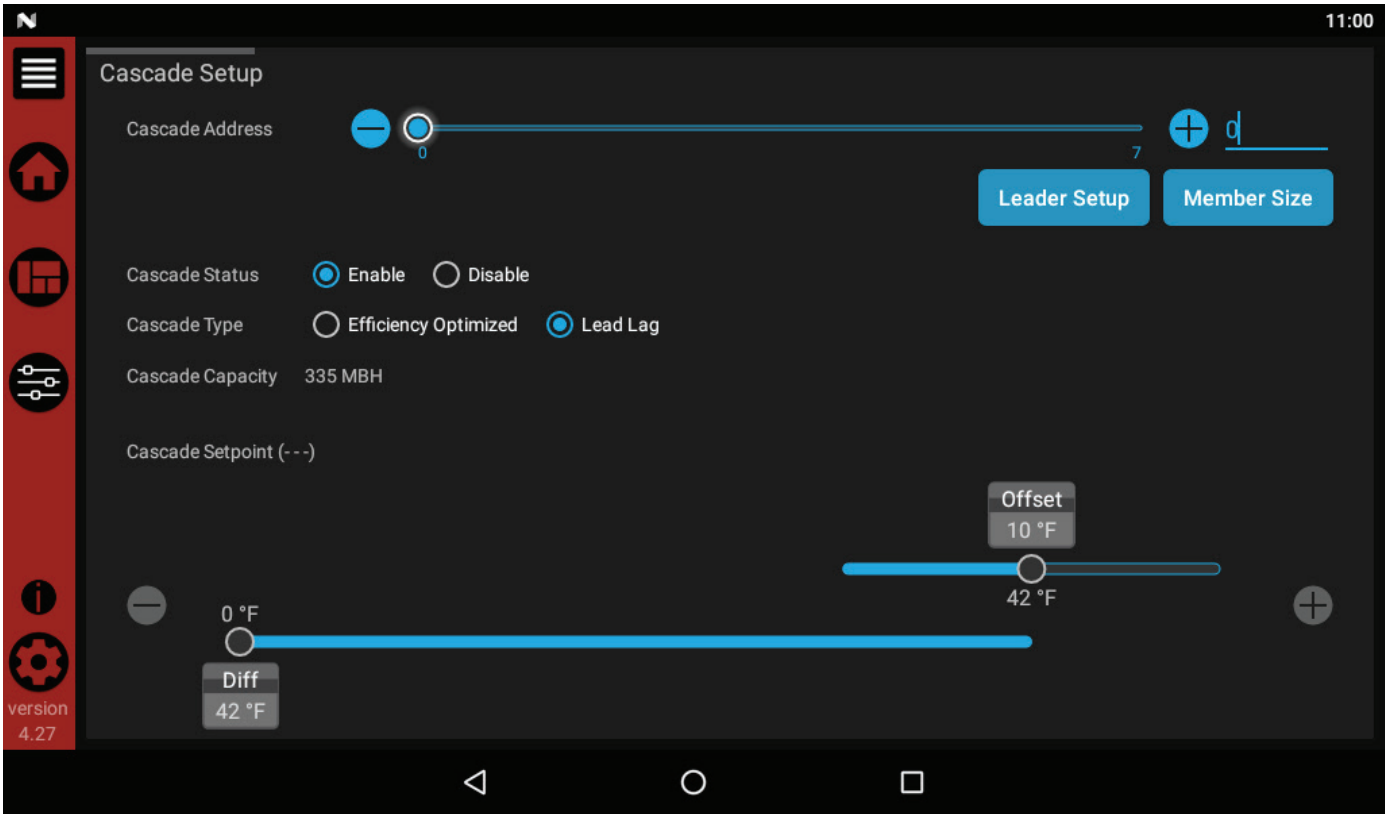

12 Operating information

General

How the boiler operates

The Knight XL uses an advanced stainless steel heat exchanger and electronic control module that allows fully condensing operation. The blower pulls in air and pushes flue products out of the boiler through the heat exchanger and flue piping. The control module regulates blower speed to control the boiler firing rate. The gas valve senses the amount of air flowing into the boiler and allows only the right amount of gas to flow.

How the control module operates

The SMART TOUCH control module receives inputs from boiler sensors and external devices. The control module activates and controls the blower and gas valve to regulate heat input and switches the boiler, Domestic Hot Water (DHW), and system pumps on and off as needed. The user programs the module to meet system needs by adjusting control parameters. These parameters set operating temperatures and boiler operating modes. Boiler operation can be based on boiler outlet water temperature, boiler inlet water temperature, system temperature, a 0 - 10V signal, or Modbus, depending on the parameter settings.

Control inputs and outputs

Room thermostat

There are three (3) heat/loop demand connections available on this control. These inputs tell the boiler to provide water for space heating. Each demand connection has its own set point and outdoor air reset curve. When multiple demands have a call for heat the control will give priority to the demand with the highest set point.

Example: Assume that both heat/loop demand 1 and heat/loop demand 2 have a call for heat. Demand 1 has a set point of 110°F. Demand 2 has a set point of 140°F. The boiler will regulate the system temperature to 140°F until Demand 2 has been satisfied. Once Demand 2 has been satisified the boiler will provide 110°F water to the system.

⚠ CAUTION When multiple temperature loops are used, mixing valves are required for the protection of any low temperature loops.

SMART TOUCH Multi-temp loop control

The Knight XL boiler is capable of producing up to three (3) set point temperatures to meet different space heating demands. This device controls the temperatures of up to three (3) separate loops, based on the settings for the three (3) heat/loop demands (reference Lochinvar kit 100167843).

0 - 10V input (set point or power)

The Knight XL can be controlled by a Building Management System (BMS) using a 0 - 10 VDC signal. The control can be configured by the installer to use this signal to either control set point or firing rate.

The Knight XL can also be programmed to accept a call for heat from a 0 - 10V signal, reference the Knight XL Service Manual for a detailed explanation of this procedure.

DHW priority

The SMART TOUCH control allows the connection of a DHW thermostat or tank sensor to the low voltage connection board. When a tank sensor is connected, the DHW thermostat input is ignored. When a boiler is programmed for DHW Normal Mode, the maximum firing rate can be limited to match the input rating of the indirect tank coil.

DHW / space heating (SH) cycling

If a DHW call for heat is received while a space heating call is in progress, and the DHW is in Normal Mode, the control will start the DHW pump and shut the boiler pump off. The system pump will remain on. For stand-alone boilers, if the space heating call is still active while the DHW call is in operation, the control will wait for 30 minutes (time adjustable by installer) then it will switch back to the space heating demand. There is a timer to switch from space heating to DHW and a timer to switch from DHW to space heating. The control will switch back and forth until one of the heat demands end. This function does not apply to cascade systems.

Programmable controlling sensor

The control module is programmed to use the outlet sensor as the control sensor by default. If a system supply sensor is connected, the control automatically uses it as the control sensor. For stand-alone boilers, the control sensor can be changed by the installer to the inlet sensor. If the inlet sensor is chosen as the controlling sensor, it is recommended that the system supply sensor be installed in the system supply in order to provide the best control of the inlet temperature.

Anti-cycling

After the burner turns off, the control will delay the next burner cycle for a set time period (time is adjustable by the installer). The time delay will be bypassed if the inlet water temperature drops too far during the delay.

Boiler and system pump control

The boiler pump will run whenever the burner is firing, unless the DHW is programmed for Normal Mode and the boiler is heating the DHW tank. The boiler pump will run during Freeze Protection Mode as well. It will continue to run for a short time after the burner turns off or the Freeze Protection Mode ends.

The system pump will run whenever there is a space heating call for heat, or the boiler goes into Freeze Protection Mode. It may be programmed to run during a DHW call for heat when the DHW is programmed for Zone Mode. It will continue to run for a short time after the end of the heat demand or the Freeze Protection Mode. The system pump can be programmed to run continuously if desired, except during outdoor shutdown and/or a DHW call for heat.

12 Operating information

Temperature control

Modulation

The Knight XL is capable of modulating its firing rate from a minimum of 10% to a maximum of 100%. The firing rate is dictated by the call for heat (i.e., space heating or domestic hot water), the heating load, ramp delay (if enabled), and various other temperature limitations.

Ramp delay

For systems with lower flow, the SMART TOUCH can limit the firing rate (when enabled) when a space heating call for heat starts, or when switching from a DHW call for heat to a space heating call for heat. There are six (6) limits that can be programmed, as well as six (6) time intervals corresponding to each limit. The sixth limit will also limit the firing rate for the rest of the call for heat.

Gradient limiting

If during operation of the boiler the outlet water temperature is rising too quickly, the control will reduce the firing rate to its lowest setting.

Outdoor air reset

If an outdoor air sensor is connected, the control module will calculate the set points of the three (3) space heating demands based on the programmed reset curves. The installer can change the slope of the reset curves by several adjustable parameters. The user can limit the maximum set point for the system using the space heating set points.

Boost function

If outdoor air reset is active, and any space heating demand has been active continuously for a set period of time (time adjustable by installer) and there has been no DHW demands, the control will increase the set point of that demand by a fixed number of degrees (adjustable by installer). This process will continue until the space heating demand ends, the set point reaches the programmed set point or a maximum of 20 increases has occurred. Once the system heat demand is satisfied, the set point will revert to the value determined by the reset curve.

Night setback

The controller may be programmed to reduce the space heating and DHW set points during certain times each week. Seven different start and stop times may be programmed for the space heating setback and seven start and stop times for the DHW setback.

Flame current support

To prevent nuisance shutdowns when the boiler is firing at minimum rates, the control will increase the firing rate when the flame signal drops too low.

Protection features

Outlet temperature, flue temperature, and temperature rise limiting

The outlet temperature is monitored by the boiler outlet temperature sensor. When the outlet temperature exceeds 185°F, the unit will reduce the fan speed. If the outlet water temperature exceeds 195°F (90°C) the control will shut the unit down until it cools off.

The control module monitors the flue temperature by a sensor located in the flue exhaust. If the flue temperature exceeds 215°F (102°C) the control will reduce the maximum fan speed. If the flue temperature exceeds 225°F (107°C) the control will shut the unit down. The unit will restart automatically once the flue temperature drops 10°F (6°C) and the minimum off time has expired.

The control monitors the temperature difference between the inlet and the outlet sensor. If this difference exceeds 55°F (13°C) the control will reduce the maximum fan speed. If the temperature difference exceeds 60°F (15°C) the control will shut the unit down. The unit will restart automatically once the temperature difference has dropped below 55°F (13°C) and the minimum off time has expired.

Freeze protection

DO NOT install the boiler in a room likely to freeze.

⚠ DANGER Freezing Conditions: If this boiler may have been exposed to freezing conditions, prevent from firing. Shut off power and gas to the appliance immediately and contact the factory for further instructions. Allowing the boiler to fire when the heat exchanger or near boiler piping is frozen will result in death or serious injury and significant property damage.

The following integral feature of the boiler control module provides some protection for the boiler only -- not for the system.

The boiler control module provides a freeze protection feature with the following attributes:

- Below an inlet temperature of 45°F (7°C), the boiler pump operates constantly.
- Below an inlet temperature of 37°F (3°C), the burner fires.
- Boiler and pumps turn off if boiler water inlet temperature rises above 45°F (7°C).

12 Operating information *(continued)*

Freeze protection (continued)

Neither this feature, the boiler control module, nor the use of glycol eliminates the possibility of freezing. The installation must still use recognized design, installation, and maintenance practice to prevent freeze potential for the boiler and system.

The Freeze Protection feature will not work if the appliance does not have power, is locked out, is in shutdown mode, had a component failure, or is otherwise prevented from firing.

NOTICE When system return temperatures are maintained below the dew point, condensation will form on the inside of the boiler jacket causing some internal sheet metal components to rust.

Monitor external limits

Connections are provided on the connection board for external limits such as flow switch, low water cutoff, gas pressure switches, and a louver proving switch. The SMART TOUCH will shut off the burner and inhibit relighting whenever any of these external limits open.

Run-time and alarm outputs

The boiler provides dry contacts for indicating when the boiler is running, and when it is unable to operate.

Run-time and cycle counting

The control uses two timers to monitor the total hours of burner operation. One timer monitors the time the boiler is in the Space Heating Mode. The other timer monitors the time the boiler is firing in the DHW Mode.

The control uses two (2) ignition counters to monitor the amount of boiler cycles. The first counter counts all ignitions of the control. The second counter counts only ignition attempts that have failed.

Service reminder

The control can be programmed for service reminder notification. This notification will become active when either a set time frame has expired, or a set amount of running hours or cycles has expired (all adjustable by the installer). The display will show a Maintenance Required screen. The installer's name and phone number can be programmed into the control. This information will appear on the Maintenance Required screen. The service reminder notification can be reset or disabled by the installer.

The time dependent feature has been disabled by the manufacturer. To enable this feature change the parameter to the desired time interval, reference the Knight XL Service Manual for details regarding parameters.

Error logging

The control will hold in memory the last 10 lockouts as well as the last 10 blockings. The date and time of the occurrence will be recorded as well. Only the 10 most current occurrences of each will be held in memory.

Boiler temperature regulation

Operating temperature (target)

The SMART TOUCH control module senses water temperature and regulates boiler firing and firing rate to achieve a target temperature. The target temperature can be set between 70°F (21°C) and 190°F (88°C).

- Target temperature is fixed when the outdoor sensor is not installed.
- Target temperature is calculated as described on this page under "Outdoor Reset Operation" and "Target Temperature Boost" when the outdoor sensor is connected.

High limit operations

The Knight XL is equipped with adjustable automatic reset and manual reset high limits. The automatic reset high limit has a maximum set point of 200°F and the manual reset high limit has a maximum set point of 210°F.

When the outlet temperature exceeds 200°F, the automatic high limit action occurs. The boiler shuts down until the outlet water temperature cools below 190°F, and a 60 second timer has expired. If the outlet temperature continues to increase, the manual reset high limit action will occur at 210°F.

High limit test procedure

1. Turn ON the main power to the boiler by placing the ON/OFF switch in the ON position.
2. Navigate to the Setpoints Screen.
3. Use the slide bar to decrease the MRHL temperature below the current outlet temperature or to its minimum setting, whichever is higher.
4. Press the APPLY CHANGES button to save the setting.
5. If the current outlet temperature is above the MRHL setting then the MRHL will function, causing a boiler lockout. If the outlet temperature is below the MRHL setting, navigate to the Service Screen and place the boiler in service mode at full fire.
6. Once the outlet temperature rises above the MRHL setting, the MRHL will function causing a boiler lockout.
7. Repeat steps 2-4 to set the MRHL to the desired setting for normal operation.

12 Operating information

Low water cutoff protection

1. The SMART TOUCH control module uses temperature sensing of both supply and return areas of the heat exchanger. If the flow rate is too low or the outlet temperature too high, the control module modulates and shuts the boiler down. This ensures boiler shutdown in the event of low water or low flow conditions.
2. Some codes and jurisdiction may accept these integral features of the control in lieu of requiring an additional limit control or low water cutoff. Consult local jurisdiction to determine. A low water cutoff is available from the factory.

Outdoor reset operation, if used

Target temperature with outdoor reset

This feature improves the system's efficiency as the outdoor temperature warms up.

See the Knight XL Service Manual to change the settings.

Reset curve

The reset curves look at outdoor air temperature and adjusts the set points.

Cascade

When multiple boilers are installed, they can be wired together in a cascade sequence. A maximum of eight boilers can be controlled from a single control. In this application one boiler would be designated as the Leader control and all others would be designated as Member controls. The Leader control can be programmed to use Lead/Lag or Efficiency Optimization control methods.

Once the Leader boiler receives a call for heat from a room thermostat, BMS, or Modbus, the control will determine what the set point will be. If outdoor air reset is desired, connect the outdoor air sensor to the terminals on the Low Voltage Connection Board on the Leader boiler. The set point will be calculated based on the programmed reset curve parameters. See the Knight XL Service Manual to program the reset curve. If outdoor air reset is not desired, do not connect the outdoor air sensor. A fixed temperature set point can be programmed into the control. See the Start-Up section of this manual to program the set point.

If the water temperature at the system supply sensor is less than the set point + the turn-off offset - the off-on differential, then the control will initiate a call for heat on the Cascade (see the Knight XL Service Manual for an explanation of the offset and differential). The Leader will energize the lead boiler on the Cascade. For a new startup this will be the Leader boiler.

Sequence of the cascade

To equalize the run time of all boilers on the Cascade, the firing sequence will automatically be changed at set intervals.

The sequence will be changed once every 24 hours. The switching on/off sequence will be as follows:

TIME	SWITCHING ON SEQUENCE
Start	L-M1-M2-M3-M4-M5-M6-M7
1 hour	M1-M2-M3-M4-M5-M6-M7-L
2 hours	M2-M3-M4-M5-M6-M7-L-M1

If a boiler locks out or is used to heat an indirect DHW tank, it will automatically be given the lowest priority for the rest of that 24 hour period.

DHW, Night Setback, and Ramp Delay operation with cascade

For normal mode DHW operation any boiler(s) in the Cascade can be selected to provide heat for a DHW call. Select a boiler to be designated as the DHW boiler. Connect the DHW thermostat or sensor to the terminals on the Low Voltage Connection Board marked for the corresponding device. When the boiler receives a DHW call, the Leader control will take that boiler out of the Cascade sequence. If another boiler is available, the Leader will start it up to take its place.

The DHW boiler will adjust its set point to the programmed DHW boiler set point and will adjust its firing rate to maintain this. Once the DHW call has been satisfied, the Leader control will place that boiler back into the Cascade sequence.

Switching of the boiler between DHW operation and SH operation when there is a call for both does not occur in Cascade Mode.

When DHW is programmed for Zone Mode, connect the DHW thermostat or tank sensor to the Leader boiler. When a DHW call is received, the Leader will modulate the entire Cascade to bring the system supply temperature up to the DHW boiler set point (if higher).

Night Setback operation of the boilers within the Cascade is available. Programming of the Night Setback will be done through the Leader boiler. Refer to the Knight XL Service manual for information regarding Night Setback.

Ramp Delay operation of the boilers as described in the Knight XL Service Manual is available when the boilers are part of a Cascade system.

12 Operating information *(continued)*

Sequence of operation

OPERATION
1. Upon a call for heat, the gas pressure switch(es) must be closed.
2. Once the gas pressure switch(es) are closed, the control turns on the appropriate pumps (system and boiler pumps for space heating, DHW pump for DHW). The flow switch and/or LWCO must close.
3. The control turns on power to the louver relay. The louver proving switch, air pressure switch, and blocked drain switch must close.
4. The control starts the prepurge cycle by initiating the blower.
5. The control starts the trial for ignition by firing the spark electrode and opening the gas valve.
6. If flame is not detected after the sparking ends, the control will perform a postpurge, then start another prepurge cycle and try to light the burner again. On the 500 and larger models, the control will lock out if this second attempt also fails. On the 400 model, the control will perform a total of 4 attempts before locking out. Once the control has locked the unit out, the RESET button will need to be pressed on the touch screen LCD.
7. If flame is detected, it holds the firing rate steady for a few seconds to let the flame stabilize, then it begins to modulate the firing rate based on a set point or some other command (such as a 0-10V BMS signal).
8. If the space heating call for heat is active, and the tank thermostat or sensor starts a DHW call for heat, the boiler will switch to the DHW mode. If programmed for normal DHW operation (not as a zone), the DHW pump will turn on first, then the boiler pump will turn off (boiler and DHW pump operation briefly overlap to ensure flow is maintained through the unit). This will divert the boiler's outlet water from the heating system and send it to the tank coil instead. The control will then modulate to maintain the outlet temperature to the DHW boiler set point.
9. If the boiler is not part of a Cascade, and both the space heating and DHW calls for heat remain active long enough, the boiler will switch back and forth between the two heating modes until one of them is satisfied.
10. Once both calls for heat are satisfied, the control will turn off the burner. The blower will continue to run during the postpurge period.
11. Any pumps that are running will continue to run for their respective pump delay times before turning off, unless programmed to remain on continuously. A 60 second anti-cycle period will start, which will delay any new call for heat until it times out.
12. In Standby, ready to start a new cycle.

12 Operating information

Knight XL control module

Use the control panel (FIG. 12-1) to set temperatures, operating conditions, and monitor boiler operation.

Figure 12-1 *Control Panel*

- The **Status** Section is located on the top left of the screen and displays how the unit is currently running (i.e. Off, Stand-by, Blocking, and Lockout) including: current driving demand, the next Hot Water Setback scheduled, the reason for any blocking or lockout, and a power button.

- The **Demand** Section is located on the bottom left of the screen and displays information about the targets and limits of the current demand being serviced.

- The **Modulation** Section is located on the top right of the screen and displays the target modulation of the unit. This section also includes target and actual fan speeds.

- The **Sensor** Section is located on the bottom right of the screen and displays both factory installed and field installed sensor including: Outdoor Air, Hot Water Temperature, System Supply, System Return, Inlet Water, Delta T, Outlet Water, Flue Temperature, and Flame Current.

- The **Navigation** Section is located down the left side of the screen. There are five (5) sections located below the Lochinvar icon: Home, View, Setup, Information (About), and Settings. The Home Section is the screen shown above. The View Section provides more detailed information including subsections for: History, Cascade, Graphing, and a complete list of current Sensor Values. The Setup Section has several screens to aid in setting up the appliance. The Setup Section includes screens for adjusting: Set Points, Pump Settings, Cascade, BMS, Ramp Delay, and Night Setback. The Information Section provides information about the hardware and software including the current software version of the interface, the version of the boiler control, and the CON·X·US device serial number. The Setting Section enables several interface setup features including: Time Setup, Temperature Unit Select, Loch'n Link, System Update, and WiFi Setup.

13 Maintenance

Maintenance and annual startup

Table 13A *Service and Maintenance Schedules*

Service technician (see the following pages for instructions)	
ANNUAL START-UP	**General:** • Address reported problems • Inspect interior; clean and vacuum if necessary; • Clean condensate trap and fill with fresh water • Check for leaks (water, gas, flue, condensate) • Verify flue and air lines in good condition and sealed tight • Check system water pressure/system piping/expansion tank • Check fill water meter • Test boiler water. When test indicates, clean system water with approved system restorer following manufacturer's information. • Check control settings • Check ignition and flame sense electrodes (sand off any deposits; clean and reposition) • Check wiring and connections • Perform combustion start-up checkout and performance verification per Section 11 of this manual (CO levels shall be less than 150 ppm). • Flame inspection (stable, uniform) • Flame signal (at least 10 microamps at high fire) • Clean the heat exchanger if flue temperature is more than 54°F (30°C) above return water temperature. • Test low water flow conditions (reference the Knight XL Service Manual). **If combustion or performance indicate need:** • Clean heat exchanger • Remove and clean burner using compressed air only • Clean the blower wheel

Owner maintenance (see the Knight XL User's Information Manual for instructions)	
Daily	• Check boiler area • Check pressure/temperature gauge
Monthly	• Check vent piping • Check air piping • Check air and vent termination screens • Check relief valve • Check condensate drain system • Check air vents • Check magnetic separator
Periodically	• Test low water cutoff (if used) • Reset button (low water cutoff)
Every 6 months	• Check boiler piping (gas and water) for leaks • Operate relief valve
End of season months	• Shut boiler down (unless boiler used for domestic hot water)

13 Maintenance

⚠ WARNING Follow the Service and maintenance procedures given throughout this manual and in component literature shipped with the boiler. Failure to perform the service and maintenance could result in damage to the boiler or system. Failure to follow the directions in this manual and component literature could result in severe personal injury, death, or substantial property damage.

⚠ WARNING The boiler should be inspected annually only by a qualified service technician. In addition, the maintenance and care of the boiler designated in Table 13A and explained on the following pages must be performed to assure maximum boiler efficiency and reliability. Failure to service and maintain the boiler and system could result in equipment failure.

⚠ WARNING Electrical shock hazard – Turn off power to the boiler before any service operation on the boiler except as noted otherwise in this instruction manual. Failure to turn off electrical power could result in electrical shock, causing severe personal injury or death.

Address reported problems

1. Inspect any problems reported by the owner and correct before proceeding.

Inspect boiler area

1. Verify that boiler area is free of any combustible materials, gasoline and other flammable vapors and liquids.
2. Verify that air intake area is free of any of the contaminants listed in Section 1 of this manual. If any of these are present in the boiler intake air vicinity, they must be removed. If they cannot be removed, reinstall the air and vent lines per this manual and the Knight XL Service Manual.

Inspect boiler interior

1. Remove the front access cover and inspect the interior of the boiler.
2. Vacuum any sediment from inside the boiler and components. Remove any obstructions.

Clean condensate trap

1. Inspect the condensate drain line, condensate PVC fittings, and condensate trap.

Monthly inspection:

1. The condensate trap should be inspected monthly to ensure the trap is properly installed and connected to the condensate pipe under the boiler, see FIG. 13-1.
2. The condensate line should be inspected monthly for obstructions, making sure it allows free flow for condensate to drain.
3. Inspect the neutralizing kit (if installed) monthly to ensure the condensate is draining properly, and there is still an adequate amount of neutralizing agent available.

Annual cleaning:

1. The condensate trap should be cleaned at least once annually, or at the end of each heating season, by removing the bottom cap and cleaning out any sediment that exists.
2. The provided condensate trap is equipped with a ball that acts as a seal against harmful flue gases escaping in case there is no condensate in the trap. If this ball is not present, flue gases may be able to pass through the trap when there is no condensate present, resulting in an unsafe environment. It is important to check and make sure the ball is still located in the trap, acting as a seal against flue gases at least once annually and after every cleaning.
3. After the condensate trap is cleaned or serviced, it must be checked to ensure that it is installed and draining properly. Reference Section 10 - Condensate Disposal for installation instructions.

***Figure 13-1** Condensate Trap*

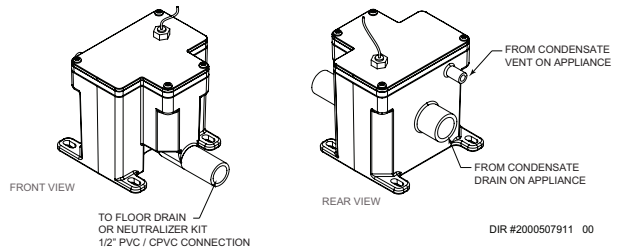

⚠ WARNING The condensate trap must be filled with water during all times of boiler operation to avoid flue gas emission from the condensate drain line. Failure to fill the trap could result in severe personal injury or death.

13 Maintenance *(continued)*

Check all piping for leaks

⚠ WARNING Eliminate all system or boiler leaks. Continual fresh makeup water will reduce boiler life. Minerals can build up in sections, reducing heat transfer, overheating heat exchanger, and causing heat exchanger failure. Leaking water may also cause severe property damage.

1. Inspect all water and gas piping and verify to be leak free.
2. Look for signs of leaking lines and correct any problems found.
3. Check gas line using the procedure found in Section 8 - Gas Connections.

Flue vent system and air piping

1. Visually inspect the entire flue gas venting system and air piping for blockage, deterioration or leakage. Repair any joints that show signs of leakage. Verify that air inlet pipe is connected and properly sealed.
2. Verify that boiler vent discharge and air intake are clean and free of obstructions.

⚠ WARNING Failure to inspect for the above conditions and have them repaired can result in severe personal injury or death.

Check water system

1. Verify all system components are correctly installed and operational.
2. Check the cold fill pressure for the system. Verify it is correct (must be a minimum of 12 psi (82.7 kPa)).
3. Watch the system pressure as the boiler heats up (during testing) to ensure pressure does not rise too high. Excessive pressure rise indicates expansion tank sizing or performance problem.
4. Inspect automatic air vents and air separators. Remove air vent caps and briefly press push valve to flush vent. Replace caps. Make sure vents do not leak. Replace any leaking vents.

Check expansion tank

1. Expansion tanks provide space for water to move in and out as the heating system water expands due to temperature increase or contracts as the water cools. Tanks may be open, closed or diaphragm or bladder type. See Section 7 - Hydronic Piping for suggested best location of expansion tanks and air eliminators.

Check fill water meter

1. Check fill water meter for water usage. If the amount exceeds 5% of your system volume, you could have a leak. Have the system checked for leaks and fixed by a qualified service technician.

Test boiler water

1. Test boiler water. Reference the Knight XL Installation and Operation Manual for guidelines. When test indicates, clean system water with approved system restorer following the manufacturer's information.

Check boiler relief valve

1. Inspect the relief valve and lift the lever to verify flow. Before operating any relief valve, ensure that it is piped with its discharge in a safe area to avoid severe scald potential. Read Section 7 - Hydronic Piping before proceeding further.

⚠ WARNING Safety relief valves should be re-inspected AT LEAST ONCE EVERY THREE YEARS, by a licensed plumbing contractor or authorized inspection agency, to ensure that the product has not been affected by corrosive water conditions and to ensure that the valve and discharge line have not been altered or tampered with illegally. Certain naturally occurring conditions may corrode the valve or its components over time, rendering the valve inoperative. Such conditions are not detectable unless the valve and its components are physically removed and inspected. This inspection must only be conducted by a plumbing contractor or authorized inspection agency – not by the owner. Failure to re-inspect the boiler relief valve as directed could result in unsafe pressure buildup, which can result in severe personal injury, death, or substantial property damage.

⚠ WARNING Following installation, the valve lever must be operated AT LEAST ONCE A YEAR to ensure that waterways are clear. Certain naturally occurring mineral deposits may adhere to the valve, rendering it inoperative. When manually operating the lever, water will discharge and precautions must be taken to avoid contact with hot water and to avoid water damage. Before operating lever, check to see that a discharge line is connected to this valve directing the flow of hot water from the valve to a proper place of disposal. Otherwise severe personal injury may result. If no water flows, valve is inoperative. Shut down the boiler until a new relief valve has been installed.

2. After following the above warning directions, if the relief valve weeps or will not seat properly, replace the relief valve. Ensure that the reason for relief valve weeping is the valve and not over-pressurization of the system due to expansion tank waterlogging or undersizing.

13 Maintenance

Inspect ignition and flame sense electrodes

1. Remove the ignition and flame sense electrodes from the boiler heat exchanger access cover.
2. Remove any deposits accumulated on the ignition/flame sense electrode using sandpaper. If the electrodes cannot be cleaned satisfactorily, replace with new ones.
3. Replace ignition/flame sense electrode, making sure gasket is in good condition and correctly positioned.

Check ignition ground wiring

1. Inspect boiler ground wire from the heat exchanger access cover to ground terminal strip.
2. Verify all wiring is in good condition and securely attached.
3. Check ground continuity of wiring using continuity meter.
4. Replace ground wires if ground continuity is not satisfactory.

Check all boiler wiring

1. Inspect all boiler wiring, making sure wires are in good condition and securely attached.

Check control settings

1. Set the SMART TOUCH control module display to Parameter Mode and check all settings. See Section 1 of the Knight XL Service Manual. Adjust settings if necessary. See Section 1 of the Knight XL Service Manual for adjustment procedures.
2. Check settings of external limit controls (if any) and adjust if necessary.

Perform start-up and checks

1. Start boiler and perform checks and tests specified in Section 11 - Start-up.
2. Verify cold fill pressure is correct and that operating pressure does not go too high.

Check burner flame

1. Inspect flame through observation window.
2. If the flame is unsatisfactory at either high fire or low fire, turn off boiler and allow boiler to cool down. Remove the burner and clean it thoroughly using a vacuum cleaner or compressed air. Do not use compressed air to clean burner if performed inside a building.
3. Remove the burner, reference FIG.'s 13-2 thru 13-3.
4. When replacing the burner, ensure gasket is in good condition and positioned correctly (FIG.'s 13-2 thru 13-3).

Figure 13-2 *Burner Assembly - Model 400 - 1000*

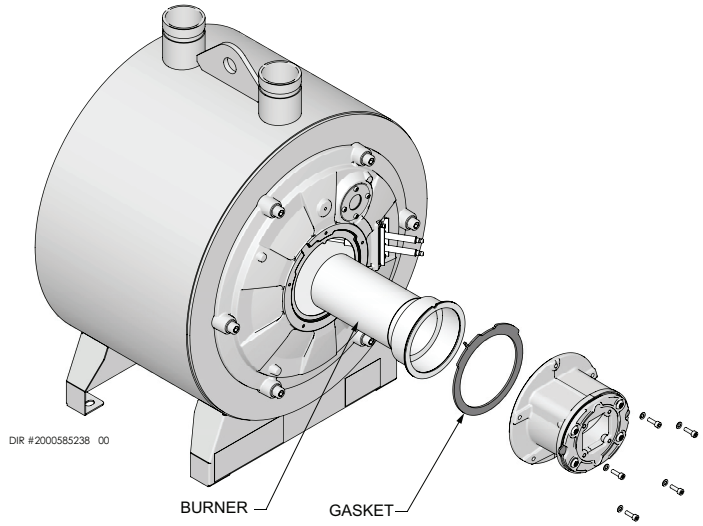

13 Maintenance *(continued)*

Check flame signal

1. At high fire the flame signal shown on the display should be at least 10 microamps.
2. A lower flame signal may indicate a fouled or damaged flame sense electrode. If cleaning the flame sense electrode does not improve, ground wiring is in good condition, and ground continuity is satisfactory, replace the flame sense electrode.
3. See Section 3 - Troubleshooting in the Knight XL Service Manual for other procedures to deal with low flame signal.

Review with owner

1. Review the Knight XL User's Information Manual with the owner.
2. Emphasize the need to perform the maintenance schedule specified in the Knight XL User's Information Manual (and in this manual as well).
3. Remind the owner of the need to call a licensed contractor should the boiler or system exhibit any unusual behavior.
4. Remind the owner to follow the proper shutdown procedure and to schedule an annual start-up at the beginning of the next heating season.

Cleaning boiler heat exchanger

For recommended materials; including brush, appropriate extension(s), refractory cover, and detailed instructions see Table 13B - Heat Exchanger Cleaning Kits.

1. Shut down boiler:
   - Follow the "To Turn Off Gas to Appliance" instructions for the boiler in Section 11 - Startup.
   - Do not drain the boiler unless it will be exposed to freezing temperatures. If using freeze protection fluids in the system, do not drain.
2. Allow time for the boiler to cool to room temperature if it has been firing.
3. Remove the nuts securing the heat exchanger access cover to the heat exchanger and set aside.
4. Remove the heat exchanger access cover, burner, and gas/air arm assembly.

⚠ WARNING The boiler contains ceramic fiber materials. Use care when handling these materials per instructions in the Service Manual. Failure to comply could result in severe personal injury.

5. Remove the condensate hose from the heat exchanger end. Connect a field supplied 3/4" diameter hose to a drain pan. Using field supplied means, cover the refractory in the back of the combustion chamber of the heat exchanger.
6. Use a vacuum cleaner to remove any accumulation on the boiler heating surfaces. Do not use any solvent.
7. Brush the heat exchanger while dry using a nylon bristle brush. **Caution:** DO NOT use a metal brush. Re-vacuum the heat exchanger.
8. Finish cleaning using a clean cloth dampened with warm water. Rinse out debris with a low pressure water supply.
9. Allow the heat exchanger to thoroughly dry.
10. Remove the field supplied rear refractory cover from the back of the combustion chamber of the heat exchanger and reassemble.
11. Close isolation valves on piping to isolate boiler from system. Attach a hose to the boiler drain and flush boiler thoroughly with clean water by using purging valves to allow water to flow through the water make-up line to the boiler.
12. Perform start-up and check-out procedures in the Check Flame and Combustion - Section 11 - Startup of this manual.
13. Replace the access cover and restore boiler to operation.

***Table 13B** Heat Exchanger Cleaning Kit*

Model	Kit Number	Part Number	Component Description
400 - 1000	100157628	100333410	Rear Refractory Cover, 10.75" Diameter
		100208804	Rear Refractory Cover, 7.25" Diameter
		100208309*	Nylon 4" Wheel Brush*
		100208310	1/4" x 12" Drill Extension
		100208311	1/4" x 24" Drill Extension

⚠ CAUTION * Do NOT use a metal brush. Only use the kit provided brush or an equivalent replacement nylon brush.

***Figure 13-3** Rope Gasket - Heat Exchanger Door*

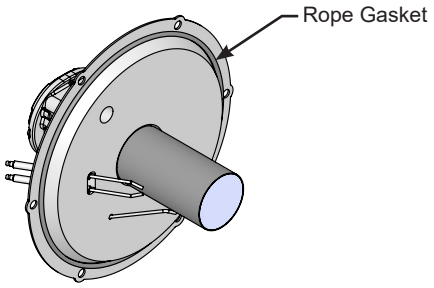

CAUTION: IF GASKET IS DAMAGED DO NOT REUSE, THE GASKET MUST BE REPLACED.

NOTICE Rope gasket is intended for sealing combustion (FIG. 13-5). If damaged DO NOT reuse, the rope gasket must be replaced. Consult factory for replacement rope gasket.

14 Diagrams

Figure 14-1 *Wiring Diagram*

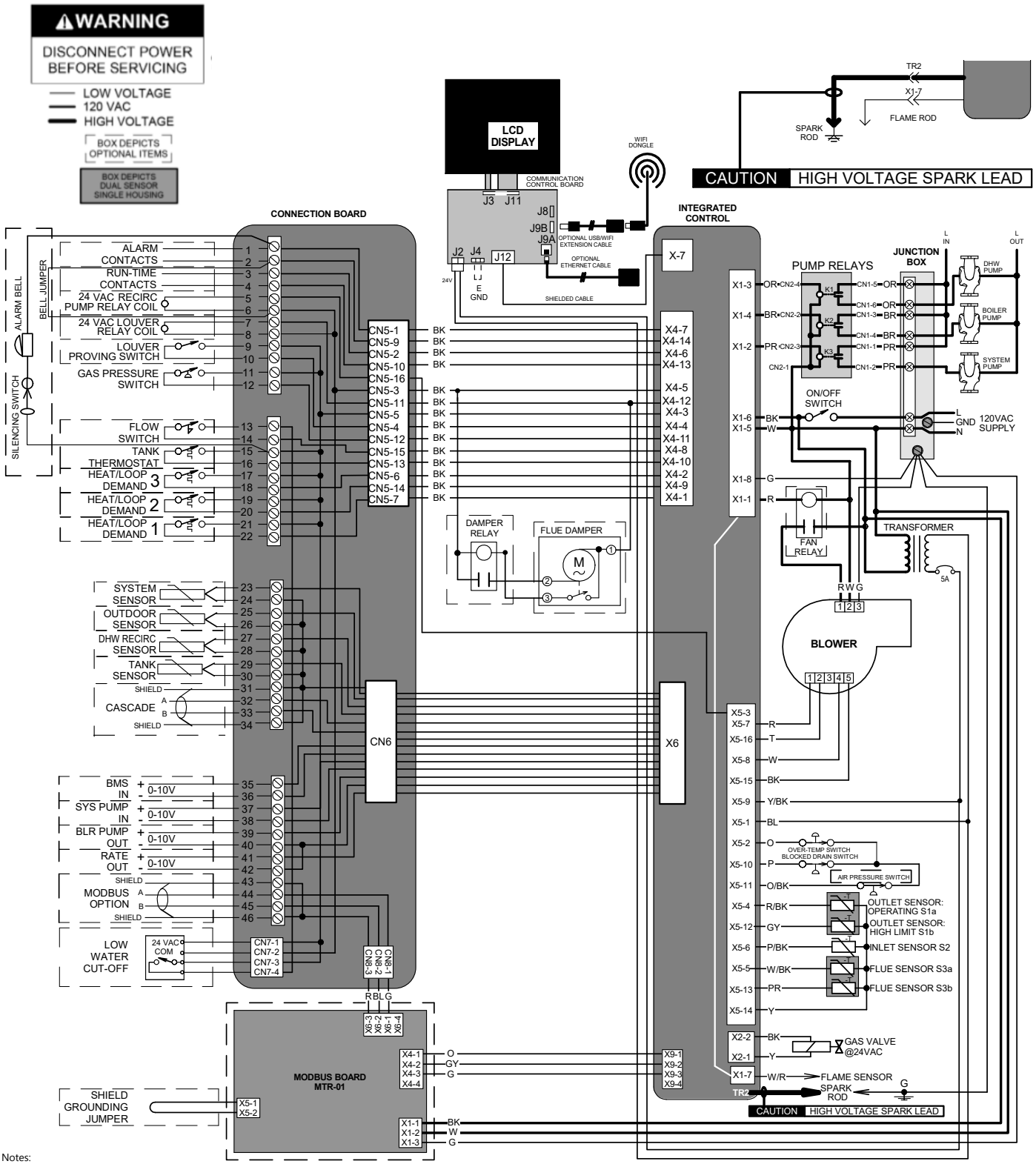

Notes:

1. All wiring must be installed with local, state, provincial, and national code requirements per either N.E.C. in USA or C.S.A. in Canada.
2. If any original equipment wire as supplied with appliance must be replaced, then it must be replaced with wire having same wire gauge (AWG) and rated for a minimum of 105°C. Exceptions: Replacement high voltage spark lead and ribbon cables must be purchased from the factory. Use of a non-approved spark lead or ribbon cables can lead to operational problems which could result in non-repairable damage to the integrated controller or other components.
3. Actual connector block locations may vary from those shown on diagrams. Refer to actual components for proper connector block locations when using diagrams to trouble shoot.
4. Where possible, switches are shown without utilities (gas, water, electricity) connected to the unit. As such, actual switch states may vary from those shown on diagrams depending upon whether utilities are connected or fault condition is present.

14 Diagrams *(continued)*

***Figure 14-2** Ladder Diagram*

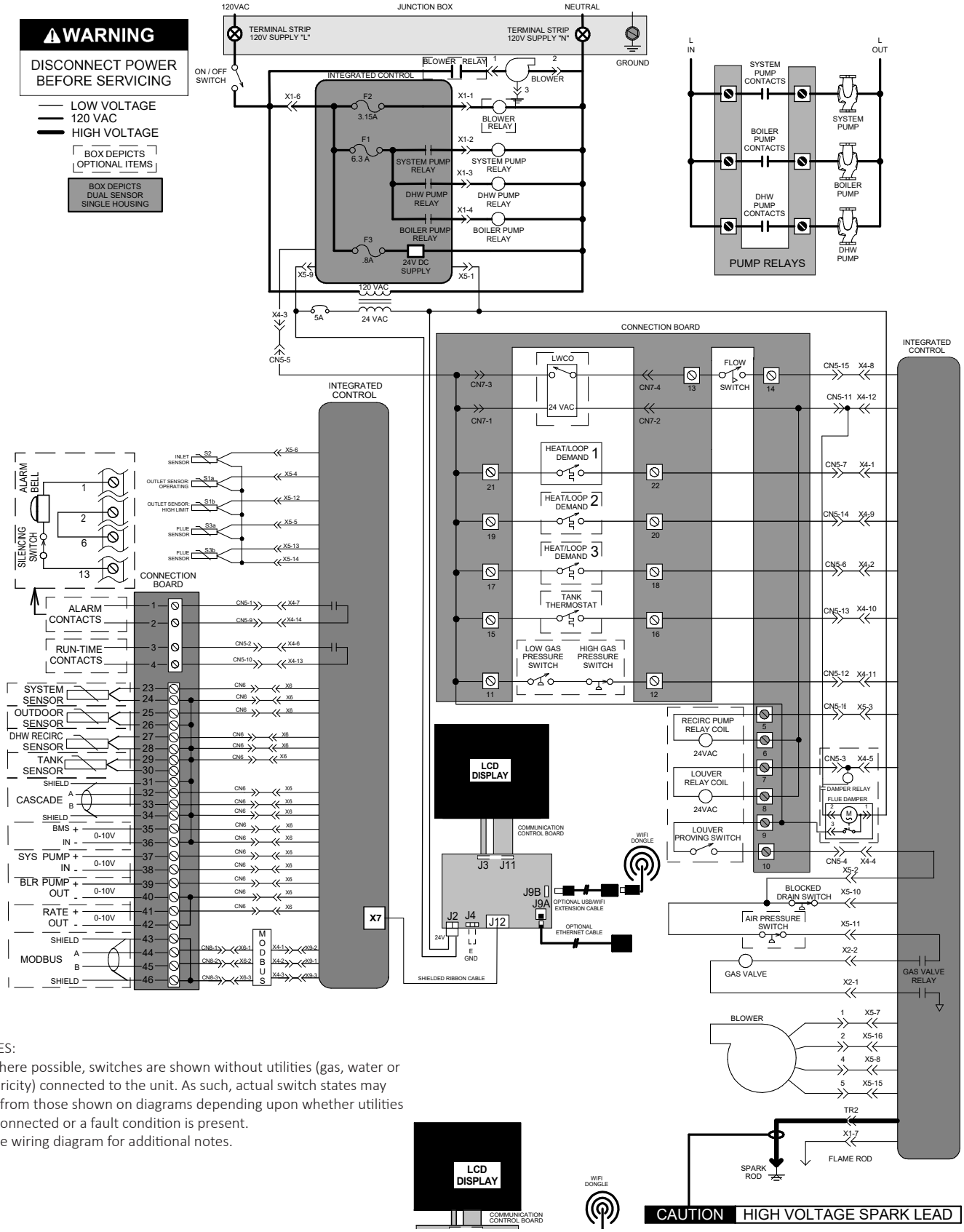

NOTES:
1. Where possible, switches are shown without utilities (gas, water or electricity) connected to the unit. As such, actual switch states may vary from those shown on diagrams depending upon whether utilities are connected or a fault condition is present.
2. See wiring diagram for additional notes.

100329773 Rev J

NOTES

Lochinvar®
HIGH EFFICIENCY BOILERS & WATER HEATERS
300 Maddox Simpson Parkway
Lebanon, TN 37090
615-889-8900 / Fax: 615-547-1000
www.Lochinvar.com

Revision Notes: *Revision A (PCP #3000062171 / CN #500048062) initial release.*
Revision B (PCP #3000065127 / CN #500050793) reflects updated figures 14-1 and 14-2.
Revision C (PCP #3000067924 / CN #500053443) reflects the removal of a warning from page 16.
Revision D (PCP #3000068505 / CN #500054027) reflects updates to the wording in step 11 on page 14.
Revision E (PCP #3000069836 / CN #500055226) reflects the addition of the product summary and changing to the max inlet requirements.

100383073_2000837361_Rev E
12/25