THERMOSTATIC ELECTRIC GRIDDLE

Commercial & Marine

124T, 124TR, 124TC, 124THE, 124TSS
136T, 136TC, 136TNTS, 136THE
148T, 148THE, 148TC, 148TSS
160T, 160TC, 160THE, 160TSS
172T, 172TC, 172TSS, 172TBC

Installation and Operation Instructions

2M-W352 Rev. H 4/15/0.16

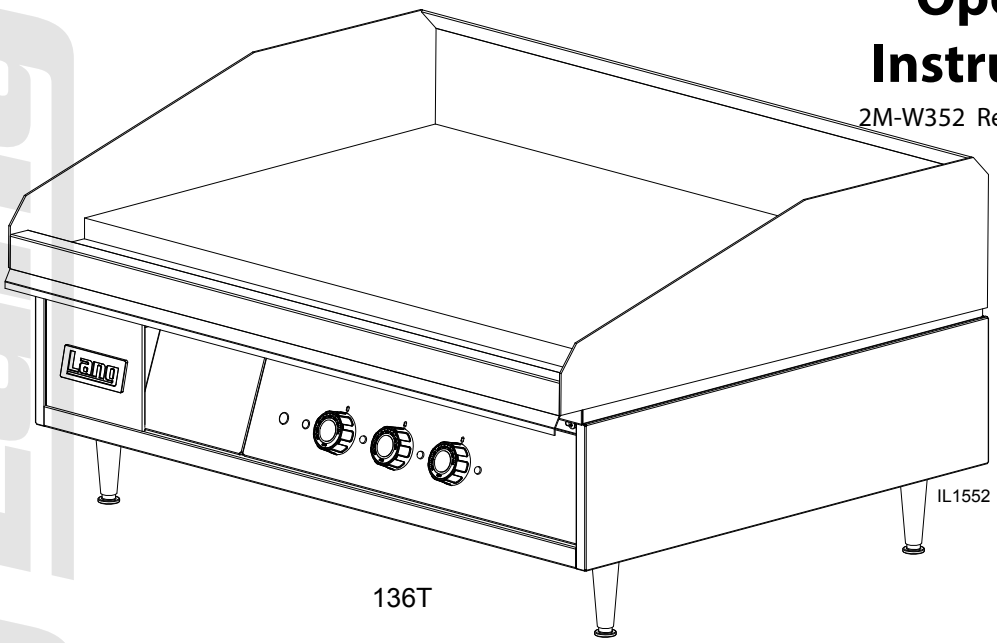

136T

SAFETY SYMBOL

These symbols are intended to alert the user to the presence of important operating and maintenance instructions in the manual accompanying the appliance.

FOR YOUR SAFTEY

DO NOT STORE OR USE GASOLINE OR OTHER FLAMMABLE VAPORS AND LIQUIDS IN THE VICINTIY OF THIS OR ANY OTHER APPLIANCE.

POST IN PROMINENT LOCATION

INSTRUCTIONS TO BE FOLLOWED IN THE EVENT USER SMELLS GAS. THIS INFORMATION SHALL BE OBTAINED BY CONSULTING YOUR LOCAL GAS SUPPLIER. AS A MINIMUM, TURN OFF THE GAS AND CALL YOUR GAS COMPANY AND YOUR AUTHORIZED SERVICE AGENT. EVACUATE ALL PERSONNEL FROM THE AREA.

WARNING

IMPROPER INSTALLATION, ADJUSTMENT, ALTERATION, SERVICE OR MAINTENANCE CAN CAUSE PROPERTY DAMAGE, INJURY OR DEATH. READ THE INSTALLATION, OPERATION & MAINTENANCE INSTRUCTIONS THOROUGHLY BEFORE INSTALLING OR SERVICING THIS EQUIPMENT.

WARNING

RISK OF FIRE OR ELECTRIC SHOCK
DO NOT OPEN

WARNING, TO REDUCE THE RISK OF ELECTRICAL SHOCK, DO NOT REMOVE CONTROL PANEL. NO USER-SERVICABLE PARTS INSIDE.
REPAIRS SHOULD BE DONE BY AUTHORIZED SERVICE PERSONNEL ONLY.

NOTICE

Using any part other than genuine Lang factory supplied parts relieves the manufacturer of all liability.

Lang reserves the right to change specifications and product design without notice. Such revisions do not entitle the buyer to corresponding changes, improvements, additions or replacements for previously purchased equipment.

Due to periodic changes in designs, methods, procedures, policies and regulations, the specifications contained in this sheet are subject to change without notice. While Lang exercises good faith efforts to provide information that is accurate, we are not responsible for errors or omissions in information provided or conclusions reached as a result of using the specifications. By using the information provided, the user assumes all risks in connection with such use.

MAINTENANCE AND REPAIRS

Contact your local dealer for service or required maintenance. Please record the model number, serial number, voltage and purchase & Installation Information in the area below and have it ready when you call to ensure a faster service.

Model No.: _____ Purchased From: _____

Serial No.: _____ Location: _____

Voltage: _____ Purchase Date: _____

1-Phase or 3 Phase: _____ Installed Date: _____

PROBLEMS, QUESTIONS or CONCERNS

Before you proceed consult you authorized Lang service agent directory
or
Call the Lang Technical Service Department at 314-678-6315

TABLE OF CONTENTS

Specifications . . . . . 4 - 5
Equipment Description 6
Unpacking 7
Installation
- Leg Installation 8
- Ventilation & Clearence 9
- Electrical Connection 9
- Technical Data. 9
- Phasing 9

Initial Start-Up
- Pre-Power On 10
- Power On 10
- Seasoning Cooking Surface. 10

Operation
- General 11
- Loading the Griddle 11
- Suggested Times and Temperatures 11

Maintenance
- Cleaning 12
- Crome Surface Griddle Care 13

Troubleshooting
- Symptoms / Possible Causes 14
- Possible Causes / Test 14

Wiring Diagram
- 208/240VAC 15
- 480VAC 3 PHASE. 16
- 2' Accu-Temp Electric Grid w/CSE12 Hoods 17

Exploded View & Parts List 18-23

NOTICE **Service on this or any other Lang appliance must be performed by qualified personnel only. Consult your Lang Authorized Service Agent Directory. You can call our service number 314-678-6315 or visit our website www.langworld.com for the service agent nearest you.**

EQUIPMENT SPECIFICATIONS

Model	Height x Width x Depth (Not including legs)	Clearance from combustible surface	Weight Actual	Weight Shipping	Freight Class
124	15.0" x 24.0" x 28.2" 381mm x 610mm x 717mm	Sides: 2" Back: 2"	243 lbs. 110 kg	280 lbs. 127 kg	85
136	15.0" x 36.0" x 28.2" 381mm x 914mm x 717mm		368 lbs. 167 kg	410 lbs. 186 kg	
148	15.0" x 48.0" x 28.2" 381mm x 1219mm x 717mm		483 lbs. 220 kg	515 lbs. 234 kg	
160	15.0" x 60.0" x 28.2" 381mm x 1524mm x 717mm		621 lbs. 282 kg	665 lbs. 302 kg	
172	15.0" x 72.0" x 28.2" 381mm x 1830mm x 717mm		724 lbs. 329 kg	800 lbs. 364 kg	

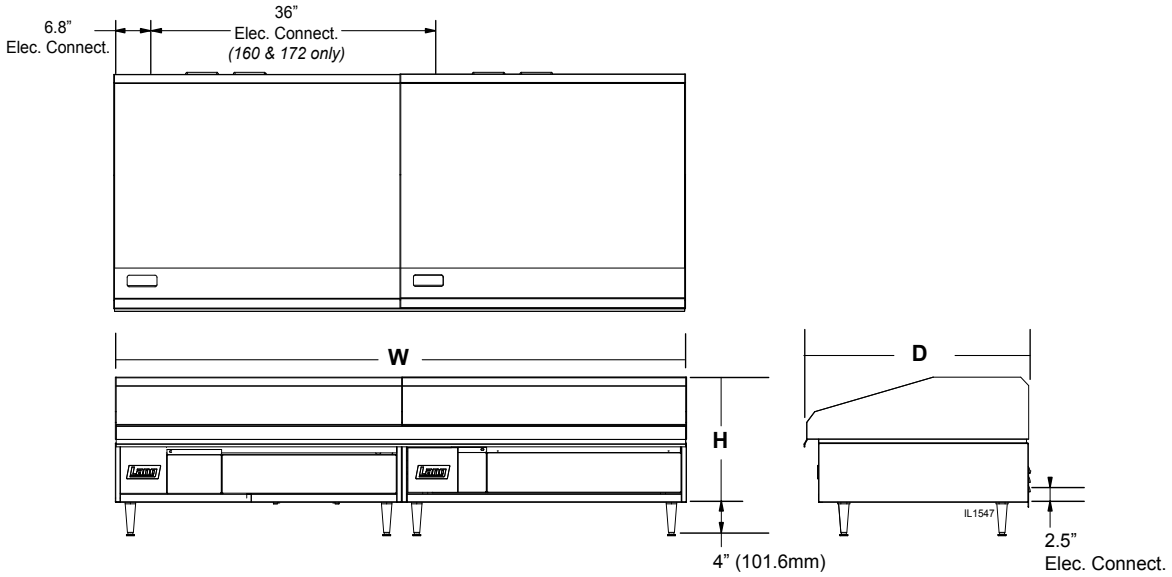

ELECTRICAL SPECIFICATIONS - MARINE

Current Model	Volts AC	Hz.	Ph	Kw TOT.	Amp 1PH.	Supply Wire 1 PH	Amp 3 Ph L1	Amp 3 Ph L2	Amp 3 Ph L3	Supply Wire 3 PH	Kw TOT.	Amp 1PH.	Supply Wire 1 PH	Amp 3 Ph L1	Amp 3 Ph L2	Amp 3 Ph L3	Supply Wire 3 PH
124T-380VM	380V	50/60	3	12			27.3	15.7	15.7	10							
124T-440VM	440V	50/60	3	12			23.6	13.6	13.6	10							
124T-480VM	480V	60	3	12			22	13	13	12							
124T-M	208/240V	60	1/3	12	58	4	50	29	29	6							
124TC-480VM	480V	60	3	12			22	13	13	12							
136T-380VM	380V	60	3	18			27.3	27.3	27.3	10							
136T-440VM	440V	60	3	18			23.6	23.6	23.6	12							
136T-480VM	480V	60	3	18			22	22	22	12							
136TC-440VM	440V	60	1/3	18	87	2	50	50	50	6							
136TC-480VM	480V	60	3	18			22	22	22	12							
136THE-480VM	480V	50/60	3	18			21.7	21.7	21.7	10							
136T-M	208/240V	60	1/3	18	87	2	50	50	50	6							
148T-440VM	440V	60	3	24			35.4	35.4	21.7	8							
148T-480VM	480V	60	3	24			33	33	22	8							
148T-M	208/240V	60	1/3	24	116	1	75	75	50	3							
148THE-440VM	440V	60	3	24			35.4	35.4	21.7	8							
160T-440VM	440V	60	3	12			23.6	13.6	13.6	10	18			23.6	23.6	23.6	10
160T-480VM	480	60	3	12			22	13	13	12	18			22	22	22	12
160T-M	208/240V	60	1/3	12	58	2	50	29	29	6	18	87	2	50	50	50	6
172T-440VM	440V	60	3	18			23.6	23.6	23.6	12	18			23.6	23.6	23.6	12
172T-480VM	480V	60	3	18			22	22	22	12	18			22	22	22	12
172T-M	208/240V	60	1/3	18	87	2	50	50	50	6	18	87	2	50	50	50	6

EQUIPMENT SPECIFICATIONS

Current Model	Volts AC	Hz.	PH.	Kw Tot.	Amp 1PH.	Supply Wire 1 PH	Amp 3 Ph			Supply Wire 3 PH	Kw Tot.	Amp 1PH.	Supply Wire 1 PH	Amp 3 Ph			Supply Wire 3 PH
							L1	L2	L3					L1	L2	L3	
124T	208/240V	60	1/3	12	58	4	50	29	29	6							
124T-220V	220V	50/60	1/3	10	45.5	6	39.4	22.7	22.7	8							
124T-220VCW	220V	50/60	1/3	10	45.5	6	39.4	22.7	22.7	8							
124T-380V	380V	60	3	12			27.3	15.7	15.7	10							
124T-480V	480V	60	3	12			22	13	13	12							
124T-480VSJ	480V	60	3	12			22	13	13	12							
124TB	208/240V	60	1/3	12	58	4	50	29	29	6							
124T-BK	208/240V	60	1/3	12	58	4	50	29	29	6							
124TC	208/240V	60	1/3	12	58	4	50	29	29	6							
124TCHE	208/240V	60	1/3	12	58	4	50	29	29	6							
124TC-TE	208/240V	60	1/3	12	58	4	50	29	29	6							
124THE	208/240V	60	1/3	12	58	4	50	29	29	6							
124THE2L	208/240V	60	1/3	12	58	4	50	29	29	6							
124T-PE	208/240V	60	1/3	12	58	4	50	29	29	6							
124T-PE-480V	480V	60	3	12			22	13	13	12							
124TR	208/240V	60	1/3	12	58	4	50	29	29	6							
124TSS	208/240V	60	1/3	12	58	4	50	29	29	6							
124TSS-480V	480V	60	3	12			22	13	13	12							
136T	208/240V	60	1/3	18	87	2	50	50	50	6							
136T-380V	380V	60	3	18			27.3	27.3	27.3	10							
136T-480V	480V	60	3	18			22	22	22	12							
136T-480VCP							23.6	23.6	23.6								
136TC	208/240V	60	3	18	87	2	50	50	50	6							
136TC-TE	208/240V	60	1/3	18	87	2	50	50	50	6							
136TC-TE-380	380V	50	3	18			27	27	27	10							
136THE-240V	208/240V	60	1/3	18	87/75	2	50/43	50/43	50/43	6							
136TNTS	208/240V	60	1/3	18	87	2	50	50	50	6							
136T-PE	208/240V	60	1/3	18	87	2	50	50	50	6							
148T	208/240V	60	1/3	24	116	1	75	75	50	3							
148T-480V	480V	60	3	24			33	33	22	8							
148TC	208/240V	60	1/3	24	116	1	75	75	50	3							
148TC-380V	380	50	3	24			41	41	27	6							
148TC-TE	208/240V	60	1/3	24	116	1	75	75	50	3							
148TC-TE-380	380V	50	3	24			41	41	27	6							
148TC-TE-480	480V	60	3	24			31	33	22	8							
148TCHE	208/240	60	1/3	24	116	1	75	75	50	3							
148THE	208/240V	60	1/3	24	116	1	75	75	50	3							
148T-PE	208/240V	60	1/3	24	116	1	75	75	50	3							
148T-PE-480V	480V	60	3	24			33	33	22	8							
148T-SJ	208/240V	60	1/3	24	116	1	75	75	50	3							
148TSS	208/240V	60	1/3	24	116	1	75	75	50	3							
148TSS-480V	480V	60	3	24			33	33	22	8							
160T	208/240V	60	1/3	12	58	2	50	29	29	6	18	87	2	50	50	50	6
160T-PE	208/240V	60	1/3	12	58	4	50	29	29	6	18	87	2	50	50	50	6
160T-440V	440	60	3	12			23.6	13.6	13.6	10	18			23.6	23.6	23.6	10
160T-P-480V	480V	60	3	12			22	13	13	12	18			22	22	22	12
160T-480V	480V	60	3	12			22	13	13	12	18			22	22	22	12
160T-480VCP	480V	60	3	12			22	13	13	12	18			22	22	22	12
160TC-TE	208/240V	60	1/3	12	58	4	50	29	29	6	18	87	2	50	50	50	6
160TC-TE-480	480V	60	3	24			33	33	22	8							
160THE	208/240V	60	1/3	12	58	4	50	29	29	6	18	87	2	50	50	50	6
160TSS	208/240V	60	1/3	12	58	2	50	29	29	6	18	87	6	50	50	50	6
160TSS-480V	480V	60	3	12			22	13	13	12				22	22	22	12
172T	208/240V	60	1/3	18	87	2	50	50	50	6	18	87	2	50	50	50	6
172T-380V	380V	50	3	18			27	27	27	10	18			27	27	27	10
172T-480V	480V	60	3	18			22	22	22	12	18			22	22	22	12
172T-480V-CP	480V	60	3	18			22	22	22	12	18			22	22	22	12
172T-480VSJ	480V	60	3	18			22	22	22	12	18			22	22	22	12
172TBC	208/240V	60	1/3	18	87	2	50	50	50	6	18	87	2	50	50	50	6
172TC	208/240V	60	1/3	18	87	2	50	50	50	6	18	87	2	50	50	50	6
172TC-480V	480V	60	3	18			22	22	22	12	18			22	22	22	12
172TC-TE	208/240V	60	1/3	18	87	2	50	50	50	6	18	87	2	50	50	50	6
172TC-TE-380	380V	50	3	18			27	27	27	10	18			27	27	27	10
172T-PE	208/240V	60	1/3	18	87	2	50	50	50	6	18	87	2	50	50	50	6
172T-PE-480V	480V	60	3	18			22	22	22	12	18			22	22	22	12
172T-SJ	208/240V	60	1/3	18	87	2	50	50	50	6	18	87	2	50	50	50	6
172TSS	208/240V	60	1/3	18	87	2	50	50	50	6	18	87	2	50	50	50	6
172TSS-480V	480V	60	3	18			22	22	22	12	18			22	22	22	12

EQUIPMENT DESCRIPTION

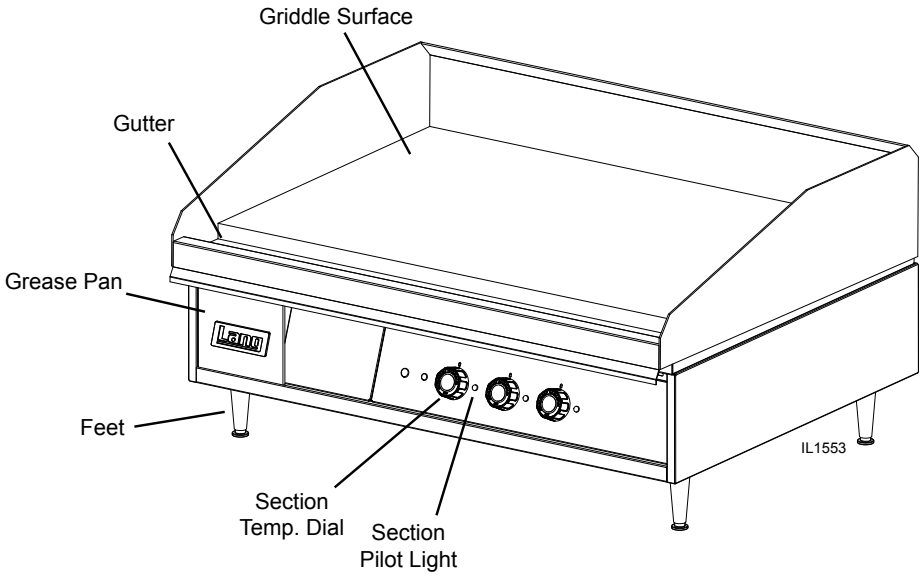

Exterior Construction

The griddle dimensions are 17” (43.18cm) High, 30” (76.20cm) Deep, and width is dependent on the actual model number.

The Sides, Bottom, and Rear wall are constructed of double wall stainless steel, which allows closer installation to combustible surfaces.

The griddle surface is made of 1” thick, highly polished steel to reduce hot and cold spots, recovery problems, warping, and ensure even heat to the edges of the griddle.

Controls

Each twelve-inch section has its own temperature dial that snaps into place to lock in any temperature from 175°F to 450°F (79°C to 232°C) in 25° increments.

Each twelve-inch section of the griddle is controlled by an area sensitive RTD probe, which can sense and react to a temperature change of +/- 4°F.

Each twelve-inch section has a set of 6 K.W. elements for high efficiency, quick recovery and outstanding performance

Technical

The 100 series thermostat griddle operates on either 208, 220, 240, 380, 440 or 480V, are shipped three phase, (unless in specific specifications). 208, 220, 240V can be field converted to single phase.

Minimum clearances: 2” from side and back

NOTICE **The data plate is on the right side of the griddle. The griddle voltage, wattage, serial number, wire size, and clearance specifications are on the data plate. This information should be carefully read and understood before proceeding with the installation.**

UNPACKING

Receiving the Griddle

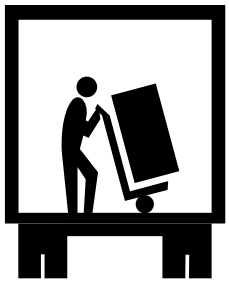

Upon receipt, check for freight damage, both visible and concealed. Visible damage should be noted on the freight bill at the time of delivery and signed by the carrier's agent. Concealed loss or damage means it does not become apparent until the merchandise has been unpacked. If concealed loss or damage is discovered upon unpacking, make a written request for inspection by the carrier's agent within 15 days of delivery. All packing
material should be kept for inspection. **Do not return damaged merchandise to Star Manufacturing Company. File your claim with the carrier.**

Location

Prior to un-crating, move the griddle as near to its intended location as practical. The crating will help protect the unit from the physical damage normally associated with moving it through hallways and doorways.

Un-crating

The griddle will arrive completely assembled inside a wood frame and strapped to a skid. Cut the straps and remove the wood frame.

The griddle can now be removed from the skid.

CAUTION

THE UNIT IS EXTREMELY HEAVY. FOR SAFE HANDLING, INSTALLER SHOULD OBTAIN HELP AS NEEDED, OR EMPLOY APPROPRIATE MATERIALS HANDLING EQUIPMENT (SUCH AS A FORKLIFT, DOLLY, OR PALLET JACK) TO REMOVE THE UNIT FROM THE SKID AND MOVE IT TO THE PLACE OF INSTALLATION.

CAUTION

ANY STAND, COUNTER OR OTHER DEVICE ON WHICH GRIDDLE WILL BE LOCATED MUST BE DESIGNED TO SUPPORT THE WEIGHT OF THE GRIDDLE.

WARNING

SHIPPING STRAPS ARE UNDER TENSION AND CAN SNAP BACK WHEN CUT.

INSTALLATION

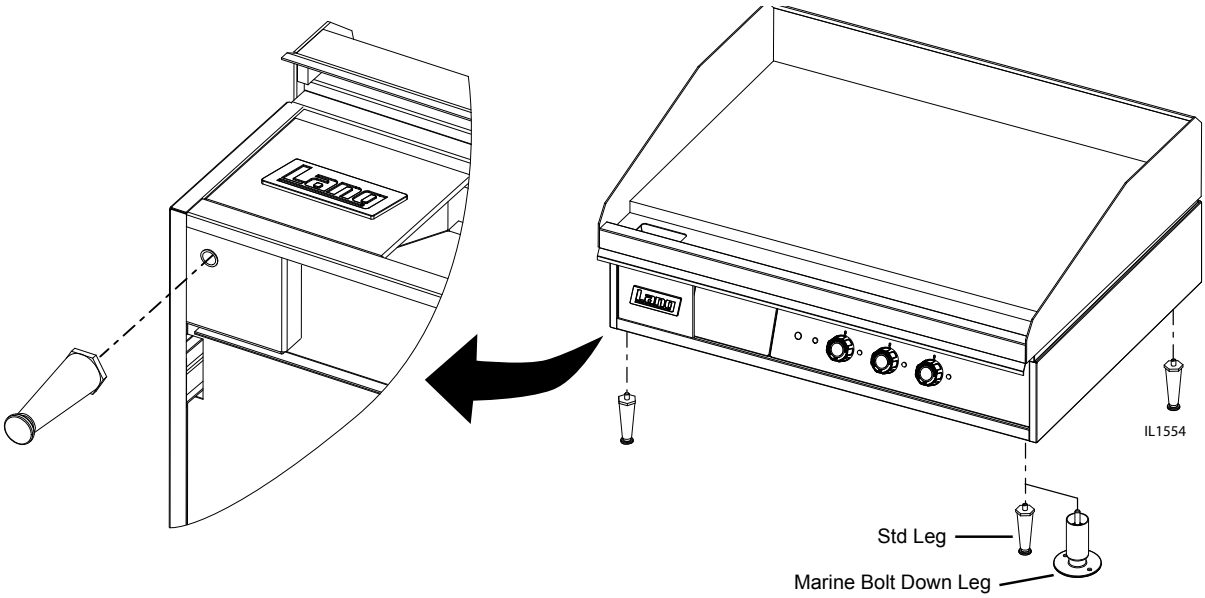

Above: *typical leg installation.*

Leg Installation

There are four, 4” legs provided for 2, 3 and 4 foot griddles.

There are eight 4” legs provided for 5 and 6 foot griddles.

The legs are shipped in the grease drawers of the griddle. Install them into the threaded holes on the underside of the griddle body.

Leveling adjustment may be done by screwing the bottom portion of the leg in and out.

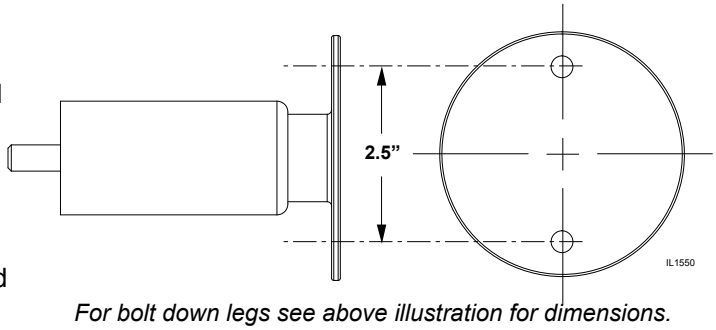

For bolt down legs see above illustration for dimensions.

WARNING **THIS APPLIANCE MUST BE GROUNDED AT THE TERMINAL PROVIDED. FAILURE TO GROUND THE APPLIANCE COULD RESULT IN ELECTROCUTION AND DEATH.**

WARNING **INSTALLATION OF THE UNIT MUST BE DONE BY PERSONNEL QUALIFIED TO WORK WITH ELECTRICITY AND PLUMBING. IMPROPER INSTALLATION CAN CAUSE INJURY TO PERSONNEL AND/OR DAMAGE TO EQUIPMENT. UNIT MUST BE INSTALLED IN ACCORDANCE WITH ALL APPLICABLE CODES.**

NOTICE: **The data plate is located on the right side of the griddle. The grill voltage, wattage, serial number, wire size, and clearance specifications are on the data plate. This information should be carefully read and understood before proceeding with the installation.**

NOTICE: **The installation of any components such as a vent hood, grease extractors, fire extinguisher systems, must conform to their applicable National, State and locally recognized installation standards.**

CAUTION **ALWAYS KEEP THE AREA NEAR THE APPLIANCE FREE FROM COMBUSTIBLE MATERIALS.**

WARNING **KEEP FLOOR IN FRONT OF EQUIPMENT CLEAN AND DRY. IF SPILLS OCCUR, CLEAN IMMEDIATELY, TO AVOID THE DANGER OF SLIPS OR FALLS.**

Ventilation and Clearances

Standard minimum clearance from combustible construction is as follows.

2” from side

2” from back

These griddles may be set directly, without legs, on a curbed base or **non-combustible** surface.

If the griddle is set without legs on a **non-combustible** floor or a curbed base, maintain a 4-inch back clearance.

Do not install the griddle directly against a **non-combustible** back wall or surface.

Do not install the griddle closer than 12 inches from an uncontrolled heat source (char broiler etc.).

Keep the appliance area free and clear of combustible material and do not obstruct the flow of combustion or ventilation air.

Electrical Connection

Detach cover on junction box at rear of unit. There is one power supply connection on the 2, 3, and 4-foot griddles. There are two power supply connections on 5 and 6-foot griddles. Refer to the power supply chart in the Technical Specification Data portion of this manual (pg 4 & 5), for proper power supply size.

There is (1) one 1 1/4-inch conduit knockout on 2, 3 and 4-foot griddles located at the rear of the griddle, through the back and the bottom of the griddle body. There are (2) two 1 1/4-inch conduit knockouts provided on the 5 and 6-foot griddles. Use a supply wire suitable for at least 90°C/194°F.

This griddle is shipped from the factory set up for a three phase service. On 208V, 220V & 240V the wiring can be changed in the supply terminal junction box to convert the griddle to single phase.

MODEL NUMBER		TOTAL K.W.	NOMINAL AMPS PER LINE										
			THREE PHASE									SINGLE PHASE	
			208 Volt			240 Volt			480 Volt				
			L1	L2	L3	L1	L2	L3	L1	L2	L3	208V	240V
24”		12	50	28.8	28.8	43.3	25	25	21.7	12.5	12.5	57.7	50
36”		18	50	50	50	43.3	43.3	43.3	21.7	21.7	21.7	86.5	75
48”		24	75	75	50	65	65	43.3	32.5	32.5	21.7	115.5	100
60”	#1	18	50	50	50	43.3	43.3	43.3	21.7	21.7	21.7	86.5	75
	#2	12	50	28.8	28.8	43.3	25	25	21.7	12.5	12.5	57.7	50
72”	#1	18	50	50	50	43.3	43.3	43.3	21.7	21.7	21.7	86.5	75
	#2	18	50	50	50	43.3	43.3	43.3	21.7	21.7	21.7	86.5	75

Technical Data

Re-Phasing

All griddles are shipped from the factory set up for a three-phase service. Rearrange the wires in the power supply terminal block to convert the griddle to single phase. Re-phasing the griddle is not chargeable to Lang Manufacturing Company as warranty. To convert to single-phase have a Lang Authorized Service Agent, follow this chart.

PHASING BY WIRE NUMBER					
MODEL NUMBER	THREE PHASE			SINGLE PHASE	
	LINE 1	LINE 2	LINE 3	LINE 1	LINE 2
124T	1,4	2	3	1,3	2,4
136T	1,4	2,5	3,6	1,3,5	2,4,6
148T	1,4,7	2,5,8	3,6	1,3,5,7	2,4,6,8
160T #1	1,4	2,5	3,6	1,3,5	2,4,6
160T #2	1,4	2	3	1,3	2,4
172T #1	1,4	2,5	3,6	1,3,5	2,4,6
172T #2	1,4	2,5	3,6	1,3,5	2,4,6

INITIAL START UP

Pre-Power On

Before starting the griddle for the first time, clean the griddle body and cooking surface.

Use a mild soap and water solution, then rinse with clear water and dry.

The griddle is shipped with a protective coating and craft paper covering the cooking surface. This MUST be removed before heating the cooking surface. After removing the craft paper, the coating can be scrapped from the cooking surface and then wiped with a dry cloth.

Power On

Set the temperature dials to 200°F (93°C).

Heat the griddle at 200°F (93°C) for 2 hours to evaporate any moisture that may be in the elements.

Wipe surface again with dry cloth to remove any residue that still remains.

After 2 hours at 200°F (93°C), turn the temperature up to 350°F (176°C) for ½ hour.

After the griddle reaches 350°F (176°C) for ½ hour, turn the griddle up another 50°F (10°C) for another ½ hour and repeat this until it is at 450°F (232°C) for ½ hour.

The unit may emit a small amount of smoke as the cooking surface passes the 300°F (148°C) point. Do not be alarmed as the smoke is caused by oils associated with the manufacturing process and will stop when the griddle reaches 350°F (176°C).

Seasoning Cooking Surface

The cooking surface must be “seasoned” in order to eliminate product sticking during cooking.

To season, heat the griddle to 250°F (121°C).

Once at 250°F (121°C), coat the cooking surface with non-salted vegetable oil.

Allow the griddle to stand at 250°F (121°C) until the cooking surface looks dry then coat it again.

Heat the griddle to 350°F (176°C) and repeat the procedure.

NOTICE: **During the first few hours of operation you may notice a small amount of smoke coming off the griddle, and a faint odor from the smoke. This is normal for a new griddle and will disappear after the first few hours of use.**

OPERATION

General

The suggested time and temperature chart (below) is provided as a guide for the products listed only.

If different temperature settings are to be used, select one side of the griddle and operate at the lowest temperature. Adjoining sections should be set at progressively higher temperatures. Do not try to operate the end sections hot and the center sections cool.

CAUTION

ALWAYS KEEP THE AREA NEAR THE APPLIANCE FREE FROM COMBUSTIBLE MATERIALS.

KEEP FLOOR IN FRONT OF EQUIPMENT CLEAN AND DRY. IF SPILLS OCCUR, CLEAN IMMEDIATELY, TO AVOID THE DANGER OF SLIPS OR FALLS.

SUGGESTED TIMES AND TEMPERATURES

PRODUCTS	TEMP F / C	TIME (MIN)
HAMBURGER		
2 patties per LB	350°F / 176°C	6 to 8
4 patties per LB		4 to 6
6 patties per LB		3 to 4
STEAKS		
1/2 to 3/4 inch thick, cooked medium	375°F / 190°C	5 to 7
3/4 to 1 inch thick, cooked medium		8 to 10
Lamb Chops	350°F / 176°C	6 to 8
Pork Chops		6 to 8
Salmon	350°F / 176°C	6 to 8
Halibut	325°F / 162°C	6 to 8
Snapper		6 to 8
Hash Brown Potatoes	375°F / 190°C	3 to 4
Bacon	350°F / 176°C	3 to 4
Sausage Links or Patties		3 to 4
Ham (Pre-cooked)	375°F / 190°C	2
Eggs	275°F / 135°C	2 to 4

Note: The times and temperatures in this chart are intended as a general guide and starting point. Your actual times and temperatures may vary from this chart.

Loading the Griddle

An understanding of how the griddle sections are controlled will be a valuable aid in loading product on your unit.

Each 12-inch section of your griddle is independently controlled by a temperature controller.
The temperature control sensor is mounted in the center of each cooking section under the griddle plate.

If the product is loaded directly over the temperature sensor, that section will turn on and the burner will heat the entire cooking section.
If the product is loaded to the side, front or back of the temperature sensor, the thermostat will react to the temperature change much slower.

During slow periods with minimal loads, do not load directly over the thermostat sensors as this will unnecessarily turn the burners on and overheat the remainder of the section not being utilized.

Turn the product and continue cooking until it has reached its desired degree of doneness.

Remove the product from the griddle.

When reloading the griddle, first use the griddle surface on which a previous load was not placed.
This will help insure the proper griddle temperature.

Timer Operation *(certain models)*

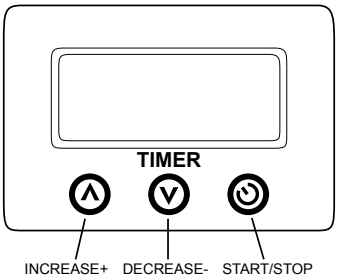

Start Up:

- The current preset time is displayed when the power switch is turned on, and 3 beeps will sound.

Timer Preset:

- There are 3 programmable timer set points available. Press "+" "-" button.
- Once a preset time is selected, the "START/STOP" button will start the timer countdown.
- Press "START/STOP" to stop the buzzer, and reset the timer.

To Change a timer Preset:

- To change a preset time, toggle to that time using the "+" or "-" buttons.
- Press and hold down the "START/STOP" button for 5 seconds till the shown preset time blinks.
- Keep the "START/STOP" pushed and toggle the time up "+" or down "-" from the pre-set time.
- The time will now stay at the new pre-set time

Operate Timer:

- Press "START/STOP" to start the time counting down
- When timer reaches "00", the alarm sounds
- The alarm will not turn off until "START/STOP" is pressed, then the current preset time will be displayed.
- To interrupt while counting down press "START/STOP".

MAINTENANCE & CLEANING

Cleaning

- Always start with a cold griddle.
- The stainless exterior can easily be cleaned using a good non-abrasive cleaner.
- Always follow the cleaner manufacturer's instructions when using any cleaner.
- Always apply these cleaners when the griddle is cold and rub in the direction of the metal's grain.

Griddle Surface Care (non-chromium surfaces)

It takes very little time and effort to keep the griddle attractive and performing at top efficiency. If grease is permitted to accumulate, it will form a gummy cake and then carbonize into a hard substance which is extremely difficult to remove. To prevent this condition, the following suggestions for cleanliness should be followed:

- After each use, scrape the griddle with a scraper or flexible spatula to remove excess grease and food. A waste drawer is provided for the scrapings. If there is an accumulation of burned on grease and food, the griddle should be thoroughly scoured and re-seasoned. Use pumice or griddle stone while the griddle is warm.

Do not use steel wool because of the danger of steel slivers getting into the food.

Daily Cleaning

Empty the grease drawer or whenever it is 3/4 full. It is easily removed for washing.

WARNING **USE CAUTION WHEN REMOVING THE RELEASE DRAWER AS IT CONTAINS HOT GREASE.**

Clean the exterior of the appliance with hot water and mild detergent to maintain a gleaming appearance.

Keep the griddle surface clean. After each cooking load scrape the griddle surface to remove any carbonized grease.

Weekly Cleaning

Once a week or when necessary the griddle surface should be cleaned and seasoned. Use a griddle stone, griddle pad, or liquid cleaner. Rub with the grain of the metal, being careful not to scrape the splash guard.

A mild detergent with water or one of the many commercial griddle cleaners may be used.

Be sure to rinse thoroughly and coat the cooking surface with a thin film of oil to prevent rusting.

Season the griddle plate after each cleaning.

GRIDDLE CARE (CHROME SURFACES)

(Chrome surface griddles are marked with “CHS” at the end of the model number designation on the nameplate.)
It takes very little time and effort to keep this Industrial Chrome griddle surface sparkling clean and performing at top efficiency. DO NOT allow grease to accumulate as it will carbonize and become difficult to remove.
To prevent this condition, the following cleaning suggestions should be followed:

1. Remove excess oil and food regularly with a 4” (100mm) wide razor sharp type scraper and wipe surface with a damp cloth if desired.
2. Following the scraping, for end of the day cleaning, a damp cloth and a non-silicated,non-abrasive, non-chlorinated cleaner such as Bon-Ami may be used to wipe surface clean, followed by wiping with clean wet cloth.
3. Follow daily cleaning steps for Non-Chrome Surfaces.

CAUTION

ON CROME SURFACES:

1. Never use pumice, griddle stones, or abrasives on the surface.
2. Never strike the griddle surface with a sharp instrument or spatula edge.
3. Never use steel wool.
4. Never use commercial liquid grill cleaner on the griddle surface.
5. Abusing the surface voids the warranty.

KEEP WATER AND SOLUTIONS OUT OF CONTROLS. NEVER SPRAY OR HOSE CONTROL CONSOLE.

MOST CLEANERS ARE HARMFUL TO THE SKIN, EYES, MUCOUS MEMBRANES AND CLOTHING. PRECAUTIONS SHOULD BE TAKEN TO WEAR RUBBER GLOVES, GOGGLES OR FACE SHIELD AND PROTECTIVE CLOTHING. CAREFULLY READ THE WARNING AND FOLLOW THE DIRECTIONS ON THE LABEL OF THE CLEANER TO BE USED.

NOTICE: Never leave a chlorine sanitizer in contact with stainless steel surfaces longer than 10 minutes. Longer contact can cause corrosion.

TROUBLESHOOTING

Symptoms

What follows is a chart of Symptoms and Possible Causes to aid in diagnosing faults with the griddle.

Refer to the Symptoms column to locate the type of failure then to the Possible Cause for the items to be checked.

To test for a possible causes refer to the TEST section and locate the Possible Cause then refer to test to identify test procedures.

SYMPTOM	POSSIBLE CAUSE
Whole Griddle will not heat	• No Power to Griddle
One Section will not heat	• Failed contactor • Failed Element.
Product Burning	• Product left on griddle too long • Out of Calibration
Product Under cooked	• Product removed too soon • Out of Calibration

POSSIBLE CAUSE	TEST
Product is cooked too long	• No test available, operational condition
Failed Contactor	• Remove the wires from the contactor coil and check for continuity across the contactor coil connection* • Ensure the contactor moveable points move freely up and down*
Failed Element	• Confirm that Elements are getting correct voltage and have continuity*

If an item on the list is followed by an asterisk (*), the work should be done by a factory authorized service representative.

NOTICE: **Service on this, or any other, LANG appliance must be performed by qualified personnel only. Consult your Lang Authorized Service Agent Directory or call the factory at 314-678-6315, or www.langworld.com For the service agent nearest you.**

WARNING **BOTH HIGH AND LOW VOLTAGES ARE PRESENT INSIDE THIS APPLIANCE WHEN THE UNIT IS PLUGGED/WIRED INTO A LIVE RECEPTACLE. BEFORE REPLACING ANY PARTS, DISCONNECT THE UNIT FROM THE ELECTRIC POWER SUPPLY.**

CAUTION **USE OF ANY REPLACEMENT PARTS OTHER THAN THOSE SUPPLIED BY LANG OR THEIR AUTHORIZED DISTRIBUTORS CAN CAUSE BODILY INJURY TO THE OPERATOR AND DAMAGE TO THE EQUIPMENT AND WILL VOID ALL WARRANTIES.**

Revision Block						
REV	ECN NO.	DESCRIPTION	DR.	MFG.	ENG.	DATE
E		REVISED AND REDRAWN	CDS			10/15/2002
F		ADDED 220VAC FOR LGCL	DLG			12/13/2002
G	6170	ADDED WIRING FOR 2 POLE TSTAT	DJS			10/1/2007

① GRIDDLE ELEMENTS
② GRIDDLE PILOT LAMP
③ GRIDDLE THERMOSTAT
④ JUMPER
⑤ TERMINAL BLOCK

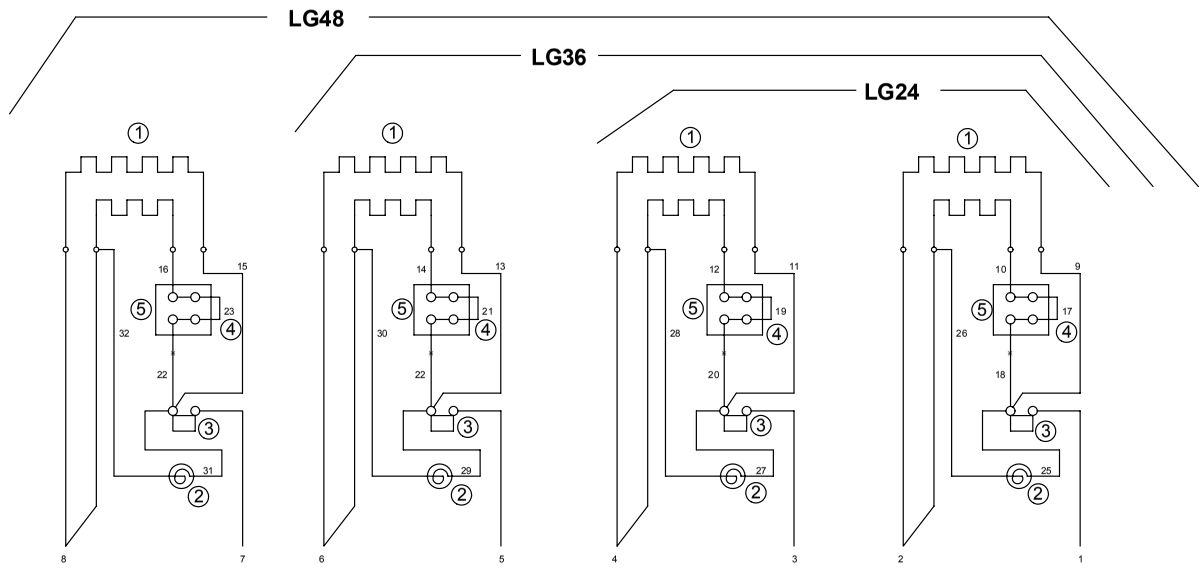

NOTE: TYPICAL WIRING FOR EACH SECTION ON UNITS THAT HAVE A 2 POLE THERMOSTAT.

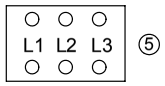

NOTES:

LG60 & LG72 HAVE TWO POWER SUPPLY CONNECTIONS

LG60: CONN #1 USE LG36
CONN #2 USE LG24

LG72: CONN #1 USE LG36
CONN #2 USE LG36

ELEMENT HOOKUP	
208-220 V	240V
INSTALL JUMPER (ITEM 4)	REMOVE JUMPER (ITEM 4)

MODEL	VOLT	Kw				AMP TOTALS			AMPS 1 PHASE	SERVICE CONNECTIONS THREE PHASE			SINGLE PHASE	
		L1-L2	L2-L3	L1-L3	TOTAL	L1	L2	L3		L1	L2	L3	L1	L2
LG24	208	6.0		6.0	12.0	50.0	28.9	28.9	57.7	1,4	2	3	1,3	2,4
	220	6.7		6.7	13.4	52.9	30.5	30.5	60.9					
	240	6.0		6.0	12.0	43.3	25.0	25.0	50					
LG36	208	6.0	6.0	6.0	18.0	50.0	50.0	50.0	86.5	1,4	2,5	3,6	1,3,5	2,4,6
	220	6.7	6.7	6.7	20.1	52.9	52.9	52.9	91.4					
	240	6.0	6.0	6.0	18.0	43.3	43.3	43.3	75					
LG48	208	12.0	6.0	6.0	24.0	76.0	76.3	50.0	115.4	1,4,7	2,5,8	3,6	1,3,5,7	2,4,6,8
	220	13.4	6.7	6.7	26.8	80.6	80.6	52.9	121.8					
	240	12.0	6.0	6.0	24.0	66.1	66.1	43.3	100					

Lang Manufacturing Company

DWN. BY : DLG | DWN. DATE : 12-13-02 | REV. BY : | REV. DATE : | CHK. BY : | CHK. DATE :

DESCRIPTION: LANG GRIDDLE 208-240/220VAC

CAD FILE : FROM ACAD | DWG. NO: 61114-01 | SHEET 1 OF 1 | REV: G

REVISIONS			
REV.	DATE/ECO	DESCRIPTION OF CHANGE	DR
C	10/15/02	REVISED & REDRAWN	CDS
D	2/8/2008 ECO# 6574	ADDED 380V MODEL, REVISED NOTES, REMOVED AMP TABLE	LRC

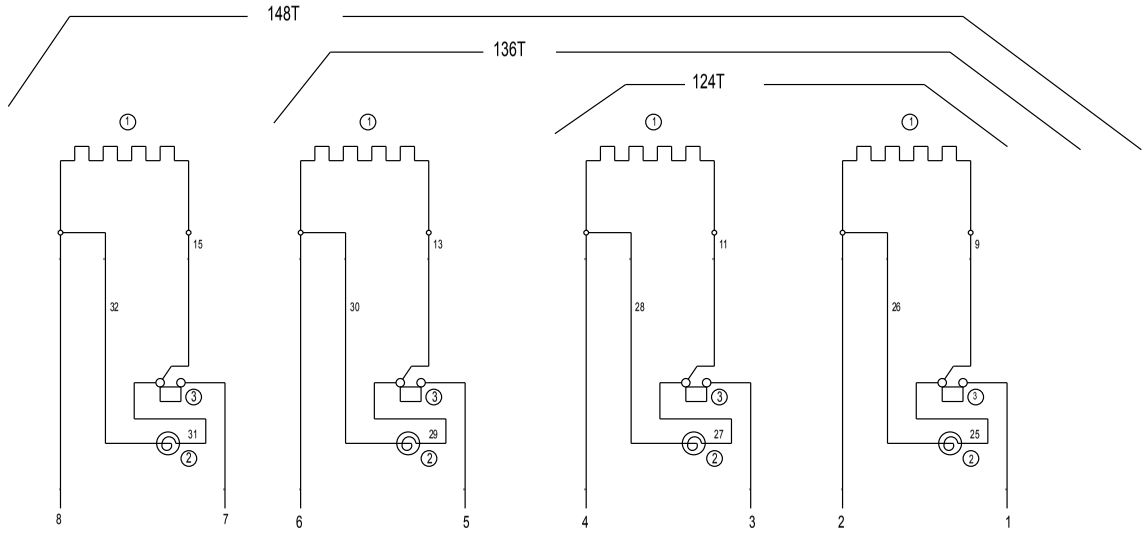

① GRIDDLE ELEMENTS
② GRIDDLE PILOT LAMP
③ GRIDDLE THERMOSTAT
④ TERMINAL BLOCK

NOTES:

D

1. 160T & 172T HAVE TWO POWER SUPPLY CONNECTIONS.
   160T: CONN #1 USE 136T; CONN #2 USE 124T
   172T: CONN #1 USE 136T; CONN #2 USE 136T

2. MODELS:
   380V, 3 PHASE ELECTRIC GRIDDLES
   480V, 3 PHASE ELECTRIC GRIDDLES

SERVICE CONNECTIONS			
MODEL	THREE PHASE		
	L1	L2	L3
24	1,4	2	3
36	1,4	2,5	3,6
48	1,4,7	2,5,8	3,6

* NUMBER

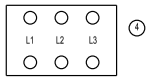

Lang® Manufacturing Company

UNLESS OTHERWISE SPECIFIED DIMENSIONS ARE IN INCHES.
TOLERANCES ARE:
DECIMALS ANGLES
.X = ± .05 ± .5°
.XX = ± .03
.XXX = ± .015

MATERIAL PART #:		MATERIAL TYPE:		BLANK DIMS.:	X	BLANK AREA:	sq in								
DWN. BY:	CDS	DWN. DATE:	10/15/02	REV. BY:		REV. DATE:		CHK. BY:		CHK. DATE:		CAD FILE:		SHEET	1 OF 1
DESCRIPTION:	WD LANG GRIDDLE 380 & 480 VAC ACCUTEMP											DWG. NO:	61114-02	REV:	D

2M-W352: Thermostatic Electric Griddle, 124T - 172T

STAR MANUFACTURING INTERNATIONAL INC.
10 SUNNEN DRIVE
ST. LOUIS, MO. 63143, USA

THIS DRAWING CONTAINS INFORMATION CONFIDENTIAL TO STAR MFG. INTL INC. NO REPRODUCTION OR DISCLOSURE OF ITS CONTENTS IS PERMITTED

MATERIAL
FINISH
DR: DJS | CK. | DATE: 7/29/2008
TOLERANCE: UNLESS NOTED: .xxx ± .015 ANGLES ± 1°

MODEL NO.
PART NO. 2M-61114-W51
TITLE W/D 2' ACCUTEMP ELECT GRID W/ CSE12 HOODS - 208/240V

REVISIONS

REV.	DATE/ECO	DESCRIPTION OF CHANGE	DR
A	7/23/2008	REVISED GRIDDLE AND CLAMSHELL WIRING NOTES	JMM

1. GRIDDLE ELEMENTS
2. GRIDDLE PILOT LAMP
3. GRIDDLE THERMOSTAT
4. JUMPER
5. TERMINAL BLOCK
6. SWITCH
7. TERMINAL BLOCK - 4 POLE
8. OVERTEMP STAT #1
9. HOOD TILT SWITCH
10. HOOD ELEMENTS
11. CONTACTOR
12. FUSE
13. TIMER PLUG
14. HOOD PILOT LAMP

GRIDDLE ELEMENT HOOKUP	
208-220 V	240V
INSTALL JUMPER (ITEM 4)	REMOVE JUMPER (ITEM 4)

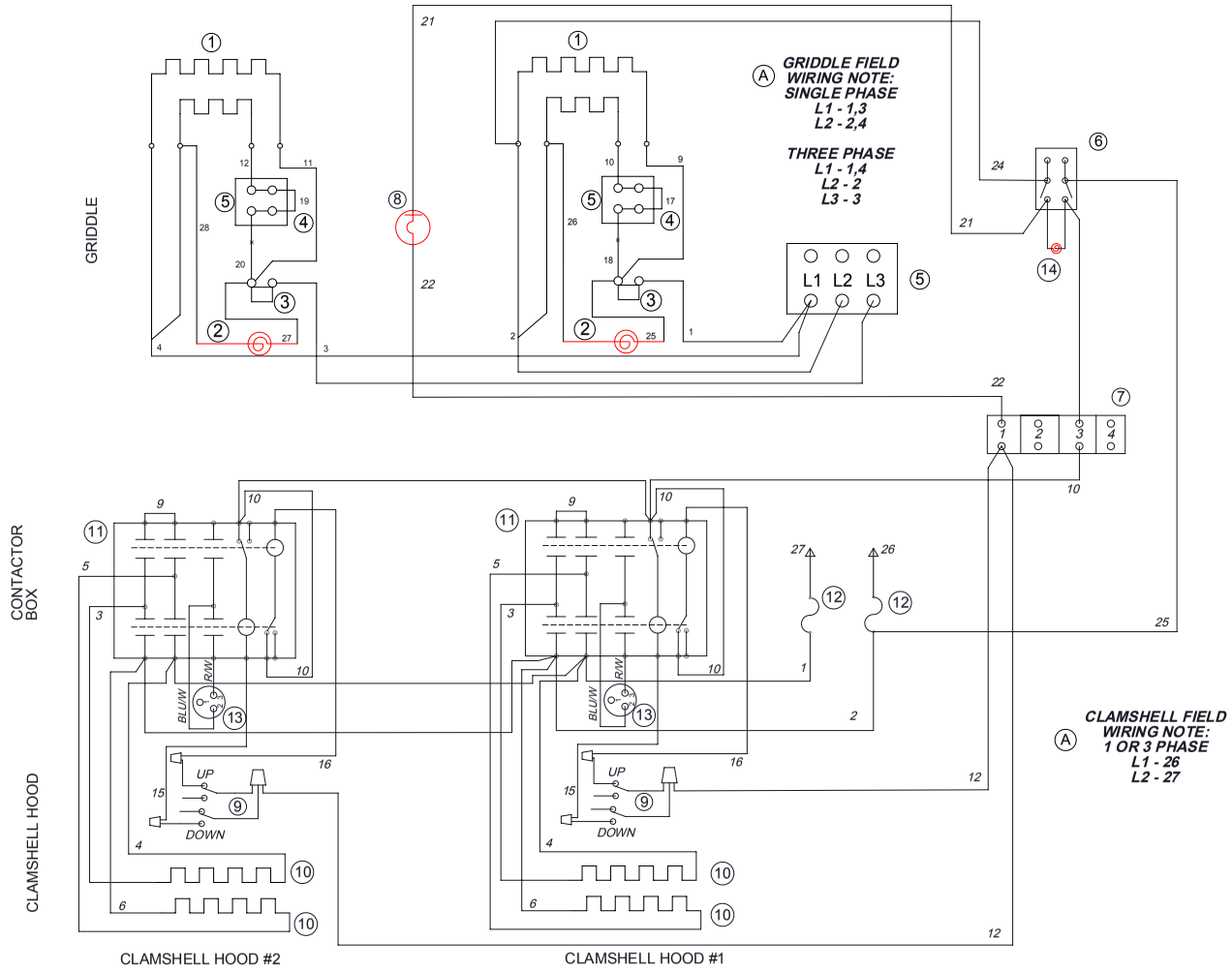

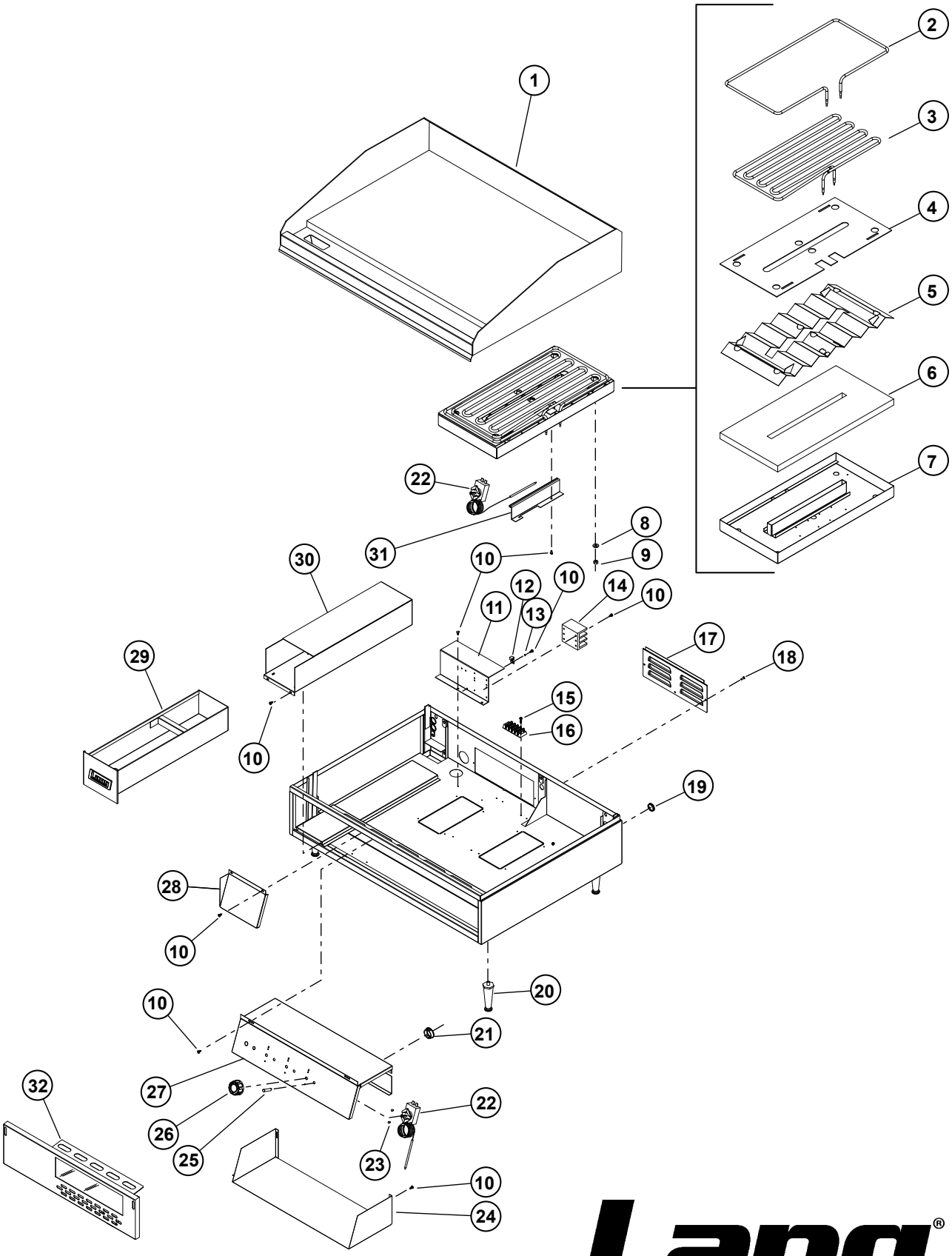

2M-W352: Thermostatic Electric Griddle, 124T - 172T

Model: Electric Thermostatic Griddle

SK2397 Rev. - 8/15/08

PARTS LIST

Rev. H 4/15/2016

Model No: 124T, 124TC, 124THE, 124TSS Accu-Temp Electric Griddle				
Fig No	Part Number	Qty	Description	Application
1	K9-XL-722-2	1	PLATE ASY 2' ACU	124T
	K9-XL-722-21		PLATE ASY 2' ACU 4.5	124T-480VSJ, 124TSS, 124TSS-480V
	K9-XL-722-211		PLATE ASSY 2' ACU WITH 4.5	124T-PE, 124T-PE-480V
	K9-XL-722-24		PLATE ASY 2' ACU W/XLH12	124THE, 124THE2L
	K9-XL-722-C24		PLATE ASY 2' ACU W/XLH12 CHRM	124TCHE
	K9-XL-722-W21		PLATE ASSY 2' TALL CROME	124T-V
	K9-XL-724-2		PLATE ASY 2' TALL CHROME	124TC
	K9-XL-724-W22		PLATE ASSY 2' TALL CROME	124TC-VL
	K9-XL-724-W24		PLTE ASY 2' ACU CHRME 3/4H	124TC-TE
	K9-XL-718-2		PLATE ASY 2' ACU REAR GUTR	124TR
	K9-XL-718-22		GRIDDLE PLATE ASSY-2'	124TB
2	2N-11030-30	2	ELMNT GRID 208V 1257W	124T
3	2N-11030-04	2	ELMNT GRID 380V 5991W	124T-380V
	2N-11030-29		ELE GRD 208/240V4.5KW/6KW	124T
	2N-11030-31		ELMNT GRID 480V 5991W	124T-480V/M, 124T-480VSJ, 124T-PE-480V, 124TSS-480V, 124TC-480VM
4	K9-XL-426	2	ELEMENT PAN PLATE	124T
5	K9-XL-439	2	ELEMENT PAN Z ASSY	124T
6	2H-XL-424	2	ELEMENT PAN INSULATION	124T
7	K9-XL-434	2	ELEMENT PAN ASSEMBLY	124T
8	2C-20201-04	12	WSHR FLT 3/8 USS PLTD	124T
9	2C-20301-06	12	NUT HEX 5/16-18 PLTD	124T
10	2C-20103-02	16	SCRW SM PLT 10 X .5 PHLSL	124T
11	K9-XL-227	1	SUPPLY WIRE BAFFLE	124T
12	Y9-31200-02-1	1	GROUNDING LUG/+LABEL	
13	2C-20202-06	1	WSHR LOCK #10 INT STAR	
14	2E-30500-07	1	TRM BLOCK 3PLELRGE 125AMP	124T
15	2C-20103-01	4	SCRW SM PLT 10X7/8 PHIL	
17	K9-XL-507	1	REAR COVER	
18	2C-20104-04	3	SCRW PHD ST 8-32X.5 PLTD PHILP	
19	2P-70903-08	1	PLG BTN PLTD MTL 5/16	124T
	2P-70903-09		PLG BTN PLTD MTL 7/16	124T
	2P-70903-09	4	PLG BTN PLTD MTL 7/16	124T
20	2A-72500-05	4	LEG 4 W/BOLT DOWN ADJ	124T-380VM, 124T-440VM
	2A-Z0314		FOOT, 4" DIE CAST	124T
21	2K-70801-02	2	SNAP BUSH 1 3/8 SB1375-16	124T
22	2T-30401-30	1	STAT FXD 550° DEG OPEN	124THE2L
	2T-30402-07	2	STAT ADJ 550o 48 C/T (2 Pole)	124T, 124T-220V, 124THE2L
	2T-30402-09		STAT ADJ 550° 72 C/T (4 Pole)	124T-220VCW, 124T-480V, 124T-PE, 124T-PE-480V, 124TC-TE, 124TSS, 124TSS-480V
23	2C-20101-77	4	SCRW MS PLT 6-32 X .25 PHD	
24	K9-XL-524-1	1	ELECT BOX COVER SPOT 2'	124T
25	Y9-31601-01-1	2	PILOT LT 250V 6LEAD BLK, w/TIN CLIP	124T, 124T-220V
	Y9-31601-01-1	3	PILOT LT 250V 6LEAD BLK, w/TIN CLIP	124THE2L
	Y9-31601-02-1		PILOT LT 480V 6LEAD BLK, w/TIN CLIP	124T-380V/M, 124T-480V/M, 124T-480VSJ, 124T-PS-480V, 124TSS-480V
26	Y9-70701-14	2	KNOB ASSY 550°F C, BLACK	124T-220VCW, 124T-480VSJ, 124T-PE, 124T-PE-480V, 124TSS, 124TSS-480V
	Y9-70701-14-2		KNOB ASSY 550°F C, RED	
	Y9-70701-15		KNOB ASSY 550°F D, BLACK	124T, 124T-220V, 124T-480V
	Y9-70701-15-2		KNOB ASSY 550°F D, RED	
27	K9-XL-725-04	1	ELECT BOX ASY 2' XL\LG	124T, 124T-220V
	K9-XL-725-041			124T-220VCW, 124T-480VSJ, 124T-PE, 124TC-TE, 124TSS
	K9-XL-725-04-1			124TCHE-T
	K9-XL-725-W13		ELECT BOX ASSY 2' XL/LG	124THE2L
	K9-XL-725-042		ELEC BOX ASSY-2' ACCU RG	124TR
28	K9-XL-422-1	1	ACCESS PANEL ASSY 2'	124T
29	K9-50302-07	1	GREASE BUCKET ASSY S/S	124T
	K9-XL-235-2		GREASE BUCKET ASSY LGR SS	124TB
	K9-XL-235-30		GREASE BUCKET ASY REAR GUTTER	124TR
30	K9-XL-228	1	BUCKET SLIDE ASSY	124T
	K9-XL-228-1		BUCKET SLIDE ASSY LGR	124TB
	K9-XL-228-30		BKT SLIDE ASSY REAR GUTTER	124TR
31	K9-XL-504	2	STAT HOLDER	124T
NI	2E-30705-01	2	CONTC 2-SPD MTR COIL 240	124THE2L
NI	2E-30900-30	2	FUSE, 60 AMP	124THE2L
NI	2E-30901-14	1	FUSE BLOCK 2 POLE 60AMP	124THE2L
NI	2J-40102-71	1	TIMER	124TCHE-T
NI	K9-50302-14	1	2' GRAB BAR ASSY	124T-MARINE, 124TC-V, 124TC-VL
NI	K9-LGCL-234-1	1	DRAWER STOP	124T-MARINE
NI	K9-WTGC-24	1	WORK TABLE GRIDDLE COVER	124T-BK

PARTS LIST

Rev. H 4/15/2016

Model No: 136T, 136TC, 136THE Accu-Temp Electric Griddle				
Fig No	Part Number	Qty	Description	Application
1	K9-XL-0722-3	1	PLATE ASY 3' ACU	136T, 136T-440VM, 136T-480V, 136TSS
	K9-XL-0722-31		PLATE ASSY 3' ACCU 4.5"	136TSS
	K9-XL-0722-311		PLATE ASY 3' ACT TALL B	136T-PE
	K9-XL-0722-W35		PLATE ASY 3' ACU-NO TAPER	136TNTS
	K9-XL-0724-34		PLATE ASSY 3' ACU W/6.75	136TC-TE, 136THE
	K9-XL-0724-W3		PLATE ASSY 3' ACU CHROME	136TC
2	2N-11030-30	3	ELMNT GRID 208V 1257W	136T
3	2N-11030-04	3	ELMNT GRID 380V 5991W	136TC-TE-380, 136T-380V
	2N-11030-29		ELE GRD 208/240V4.5KW/6KW	136T
	2N-11030-31		ELMNT GRID 480V 5991W	136T-480V, 136THE-480VM, 136T-PE-480V
	2N-11030-48		ELE GRD 440V 5991W	136T-440VM, 136TC-440VM, 136THE-440VM
4	K9-XL-426	3	ELEMENT PAN PLATE	136T
5	K9-XL-439	3	ELEMENT PAN Z ASSY	136T, 136T-440VM, 136T-480V
6	2H-XL-424	3	ELEMENT PAN INSULATION	136T, 136T-440VM, 136T-480V
7	K9-XL-434	3	ELEMENT PAN ASSEMBLY	136T, 136T-440VM, 136T-480V
8	2C-20201-04	18	WSHR FLT 3/8 USS PLTD	136T, 136T-440VM, 136T-480V
9	2C-20103-06	2	SCRW SM PLT 6 X 3/8 PHL	136T, 136T-440VM, 136T-480V
	2C-20301-06	18	NUT HEX 5/16-18 PLTD	136T, 136T-440VM, 136T-480V
10	2C-20103-02	18	SCRW SM PLT 10 X .5 PHLSL	136T, 136T-440VM, 136T-480V
11	K9-XL-227	1	SUPPLY WIRE BAFFLE	136T, 136T-440VM, 136T-480V
12	Y9-31200-02-1	1	GROUNDING LUG/+LABEL	136T, 136T-440VM, 136T-480V
13	2C-20202-06	1	WSHR LOCK #10 INT STAR	136T, 136T-440VM, 136T-480V
14	2E-30500-07	1	TRM BLOCK 3PLELRGE 125AMP	136T, 136T-440VM, 136T-480V, 136THE
15	2C-20103-01	4	SCRW SM PLT 10X7/8 PHIL	136T
16	2E-30500-22	1	TRMINL STRP 8POLE 50A250V	136T
17	K9-XL-507	1	REAR COVER	136T
18	2C-20104-04	3	SCRW PHD ST 8-32X.5 PLTD PHILP	136T
19	2P-70903-08	1	PLG BTN PLTD MTL 5/16	136T
	2P-70903-09		PLG BTN PLTD MTL 7/16	136T
		4	PLG BTN PLTD MTL 7/16	136T
20	2A-72500-05	4	LEG 4 W/BOLT DOWN ADJ	136T-440VM, 136THE-440VM/480VM, 136T-380VM
	2A-Z0314		FOOT, 4" DIE CAST	136T
21	2K-70801-02	2	SNAP BUSH 1 3/8 SB1375-16	136T
22	2T-30402-07	3	STAT ADJ 550° 48 C/T	136T (all voltages)
	2T-30402-09		STAT ADJ 550° 72 C/T	136TC-TE, 136TC-TE-380, 136T-PE, 136TSS
23	2C-20101-77	6	SCRW MS PLT 6-32 X .25 PHD	136T
24	K9-XL-524-2	1	ELECT. BOX COVER 3' & 4'	136T
25	Y9-31601-01-1	3	PILOT LT 250V 6LEAD BLK, w/TIN CLIP	136T
	Y9-31601-02-1		PILOT LT 480V 6LEAD BLK, w/TIN CLIP	136T-440VM, 136T-480V/M, 136TC-TE-380, 136THE-440/480VM, 136T-PE-480V
26	Y9-70701-14	3	KNOB 550° D, BLACK	136TC-TE, 136TC-TE-380, 136T-PE, 136TSS
	Y9-70701-14-2		KNOB 550° D, RED	
	Y9-70701-15		KNOB 550o D, BLACK	136T
	Y9-70701-15-2		KNOB 550o D, RED	
27	K9-XL-725-08	1	ELECT BOX ASY 3' XL\LG	136T
	K9-XL-725-081			136TC-TE, 136T-PE, 136TSS
28	K9-XL-422-2	1	ACCESS PANEL ASSY 3'	136T
29	K9-50302-07	1	GREASE BUCKET ASSY S/S	136T
	K9-XL-235-2		GREASE BUCKET ASSY S/S	136SB
	K9-XL-235-30		BUCKET SLIDE ASSY REAR	136SR
30	K9-XL-228	1	BUCKET SLIDE ASSY	136T
	K9-XL-228-1		BUCKET SLIDE ASSY FNT & REAR	
	K9-XL-228-30		BUCKET SLIDE ASSY REAR	
31	K9-XL-504	3	STAT HOLDER	136T
	K9-XL-506		BULB HOLDER ASSY ELECTRIC	136TSS
32	K9-XL-759-3	1	PANEL COVER ASSY 3' - CP	CORRECTIONAL PACKAGE
NI	K9-50302-15	1	3' GRAB BAR ASSY	136T-440VM, 136THE-VM, 136T-380VM
NI	K9-LGCL-234-1	1	DRAWER STOP	136T-440VM, 136THE-VM, 136T-380VM
NI	2P-50100-15	1	GRIDDLE SCRAPER 12"	CHROME UNITS
NI	2P-50100-16	1	BOM AMI CLEANER	CHROME UNITS
NI	2P-50100-17	1	20" PALMYRA BRUSH	CHROME UNITS

PARTS LIST

Rev. H 4/15/2016

Model No: 148T, 148TC, 148TSS, 148THS Accu-Temp Electric Griddle				
Fig No	Part Number	Qty	Description	Application
1	K9-XL-722-4	1	PLATE ASY 4' ACU	148T
	K9-XL-722-41		PLATE ASY 4' ACU 4.5	148T-SJ, 148TSS
	K9-XL-722-411		PLATE ASY 4' ACU TALL B	148T-PE
	K9-XL-722-44		PLATE ASY 4' ACU CHRME 3/4H	148TC-TE, 148THE
	K9-XL-0724-41		PLATE ASSY 4' ACCU	148TCHE
	K9-XL-724-4		PLATE ASY 4' ACU CHROME	148TC, 148TC-TE
2	2N-11030-30	4	ELMNT GRID 208V 1257W	ALL
3	2N-11030-04	4	ELMNT GRID 380V 5991W	148TC-TE-380, 148TC-380V
	2N-11030-29		ELE GRD 208/240V4.5KW/6KW	148T
	2N-11030-31		ELMNT GRID 480V 5991W	148T-480V, 148TSS-480V, 148TC-TE-480
	2N-11030-48		ELE GRD 440V 5991W	148T-440VM, 148THE-440VM
4	K9-XL-426	4	ELEMENT PAN PLATE	ALL
5	K9-XL-439	4	ELEMENT PAN Z ASSY	ALL
6	2H-XL-424	4	ELEMENT PAN INSULATION	ALL
7	K9-XL-434	3	ELEMENT PAN ASSEMBLY	ALL
8	2C-20201-04	24	WSHR FLT 3/8 USS PLTD	ALL
9	2C-20301-06	24	NUT HEX 5/16-18 PLTD	ALL
10	2C-20103-02	15	SCRW SM PLT 10 X .5 PHLSL	ALL
11	K9-XL-227	1	SUPPLY WIRE BAFFLE	ALL
12	Y9-31200-02-1	1	GROUNDING LUG/+LABEL	ALL
13	2C-20202-06	1	WSHR LOCK #10 INT STAR	ALL
14	2E-30500-07	1	TRM BLOCK 3PLELRGE 125AMP	148T, 148T-M, 148TC,148TH-208/240V, 148T-SJ, 148TC-TE, 148TSS, 148THS-208/240V, 148T-440VM, 148T-480V/M, 148TC-TE-380, 148TSS-480V
15	2C-20103-01	4	SCRW SM PLT 10X7/8 PHIL	148T, 148T-M, 148TC,148TH-208/240V, 148T-SJ, 148TC-TE, 148TSS, 148THS-208/240V
16	2E-30500-22	1	TRMINL STRP 8POLE 50A250V	148T, 148T-M, 148TC,148TH-208/240V, 148T-SJ, 148TC-TE, 148TSS, 148THS-208/240V
17	K9-XL-507	2	REAR COVER	ALL
18	2C-20104-04	6	SCRW PHD ST 8-32X.5 PLTD PHILP	ALL
19	2P-70903-02	2	PLG BTN PLTD MTL 1/2	ALL
	2P-70903-08	1	PLG BTN PLTD MTL 5/16	
	2P-70903-09	3	PLG BTN PLTD MTL 7/16	
20	2A-72500-05	4	LEG 4 W/BOLT DOWN ADJ	ALL MARINE APPLICATIONS
	2A-Z0314		FOOT, 4" DIE CAST	148T
21	2K-70801-02	2	SNAP BUSH 1 3/8 SB1375-16	ALL
22	2T-30402-07	4	STAT ADJ 550o 48 C/T	148T, 148TC
	2T-30402-08		STAT ADJ 450° 72 C/T	148T-440VM
	2T-30402-09		STAT ADJ 550° 72 C/T	148T-SJ, 148TC-TE, 148TSS, 148T-PE
23	2C-20101-77	8	SCRW MS PLT 6-32 X .25 PHD	ALL
24	K9-XL-524-2	1	ELECT. BOX COVER 3' & 4'	ALL
25	Y9-31601-01-1	4	PILOT LT 250V 6LEAD BLK, w/TIN CLIP	148T
	Y9-31601-02-1		PILOT LT 480V 6LEAD BLK, w/TIN CLIP	148T-440VM, 148T-480V, 148TC-TE-380, 148TSS-480V, 148TC-380V, 148THE-440VM
26	Y9-70701-12	4	KNOB ASSY 550° A, BLACK	148T-480V
	Y9-70701-12-2		KNOB ASSY 550° A, RED	
	Y9-70701-14		KNOB 550° D, BLACK	148T-SJ, 148TC-TE, 148TSS, 148T-PE
	Y9-70701-14-2		KNOB 550° D, RED	
	Y9-70701-15		KNOB 550° D, BLACK	148T
	Y9-70701-15-2		KNOB 550° D, RED	
	Y9-70701-19		KNOB 450° D, BLACK	148T-440VM
	Y9-70701-19-2		KNOB 450° D, RED	
27	K9-XL-725-12	1	ELECT BOX ASY 4' XL\LG	ALL
	K9-XL-725-121		ELECT BOX ASY 4' XL\LG	148T-SJ, 148TC-TE, 148TSS, 148T-PE
28	K9-XL-422-3	1	ACCESS PANEL ASSY 4'	ALL
29	K9-50302-07	1	GREASE BUCKET ASSY S/S	ALL
	K9-XL-235-2		GREASE BUCKET ASSY S/S	148SB
30	K9-XL-228	1	BUCKET SLIDE ASSY	ALL
	K9-XL-228-1		BUCKET SLIDE ASSY FNT & REAR	148SB
31	K9-XL-504	4	STAT HOLDER	
	K9-XL-506		BULB HOLDER ASSY ELECTRIC	148TCHE
NI	K9-50302-16	1	4' GRAB BAR ASSY	MARINE APPLICATIONS
NI	K9-LGCL-234-1	1	DRAWER STOP	MARINE APPLICATIONS

PARTS LIST

Rev. H 4/15/2016

Model No: 160T, 160TC, 160TSS Accu-Temp Electric Griddle				
Fig No	Part Number	Qty	Description	Application
1	K9-XL-0722-5	1	PLATE ASY 5' ACU	160T
	K9-XL-0722-51		PLATE ASY 5' ACU 4.5	160TSS
	K9-XL-722-511		PLATE ASY 5' ACU TALL	160T-PE
	K9-XL-0724-54		PLATE ASY 5' ACU CHRME 3/4"	160TC-TE, 160THE
	K9-XL-722-P5		PLATE ASSY 5' W/PARTITION	160T-P-480V
2	2N-11030-30	5	ELMNT GRID 208V 1257W	160T
3	2N-11030-29	5	ELE GRD 208/240V4.5KW/6KW	160T
	2N-11030-31		ELMNT GRID 480V 5991W	160T-480V, 160TSS-480V
	2N-11030-48		ELE GRD 440V 5991W	160T-440VM
4	K9-XL-426	5	ELEMENT PAN PLATE	160T
5	K9-XL-439	5	ELEMENT PAN Z ASSY	160T
6	2H-XL-424	5	ELEMENT PAN INSULATION	160T
7	K9-XL-434	5	ELEMENT PAN ASSEMBLY	160T
8	2C-20201-04	30	WSHR FLT 3/8 USS PLTD	160T
9	2C-20301-06	30	NUT HEX 5/16-18 PLTD	160T
10	2C-20103-02	34	SCRW SM PLT 10 X .5 PHLSL	160T
11	K9-XL-227	2	SUPPLY WIRE BAFFLE	160T
12	2E-31200-02	2	GROUNDING LUG/+LABEL	208/240V
	Y9-31200-02-1			480V
13	2C-20202-06	2	WSHR LOCK #10 INT STAR	160T
14	2E-30500-07	2	TRM BLOCK 3PLELRGE 125AMP	160T
15	2C-20103-01	8	SCRW SM PLT 10X7/8 PHIL	160T
16	2E-30500-20	2	TERMINAL STRIP 4 POLE 50A 250V	160T-208/240V
16	2E-30500-22	2	TRMINL STRP 8POLE 50A250V	160T
17	K9-XL-507	2	REAR COVER	160T
18	2C-20104-04	6	SCRW PHD ST 8-32X.5 PLTD PHILP	160T
19	2P-70803-02	2	PLG BTN PLTD MTL 1/2	160T-208/240V
		8		160TSS
	2P-70903-08	2	PLG BTN PLTD MTL 5/16	160T
	2P-70903-09		PLG BTN PLTD MTL 7/16	160T
20	2A-72500-05	8	LEG 4 W/BOLT DOWN ADJ	MARINE APPLICATIONS
	2A-Z0314		FOOT, 4" DIE CAST	160T
21	2K-70801-02	4	SNAP BUSH 1 3/8 SB1375-16	160T
22	2T-30402-07	5	STAT ADJ 550o 48 C/T	160T
	2T-30402-09		STAT ADJ 550° 72 C/T	160TC-TE, 160TSS, 160T-PE
23	2C-20101-77	10	SCRW MS PLT 6-32 X .25 PHD	
24	K9-XL-524-1	1	ELECT BOX COVER SPOT 2'	160T
	K9-XL-524-2	1	ELECT. BOX COVER 3' & 4'	160T
25	Y9-31601-01-1	5	PILOT LT 250V 6LEAD BLK, w/TIN CLIP	160T
	Y9-31601-02-1		PILOT LT 480V 6LEAD BLK, w/TIN CLIP	160T-480V, 160TSS-480V, 160T-440VM
26	Y9-70701-14	5	KNOB ASSY 550° D, BLACK	160TC-TE, 160TSS, 160T-PE
	Y9-70701-14-2		KNOB ASSY 550° D, RED	
	Y9-70701-15		KNOB ASSY 550° D, BLACK	160T
	Y9-70701-15-2		KNOB ASSY 550° D, RED	
27	K9-XL-725-04	1	ELECT BOX ASY 2' XL\LG	160T
	K9-XL-725-041			160TC-TE, 160TSS, 160T-PE
	K9-XL-725-08		ELECT BOX ASY 3' XL\LG	160T
	K9-XL-725-081			160TC-TE, 160TSS, 160T-PE
28	K9-XL-422-1	1	ACCESS PANEL ASSY 2'	160T
	K9-XL-422-2		ACCESS PANEL ASSY 3'	160T
29	K9-50302-07	2	GREASE BUCKET ASSY S/S	160T
30	K9-XL-228	2	BUCKET SLIDE ASSY	160T
	K9-XL-228-1		BUCKET SLIDE ASSY FNT & REAR	
	K9-XL-228-30		BUCKET SLIDE ASSY REAR	
31	K9-XL-504	5	STAT HOLDER	160T
32	K9-XL-759-2	1	PANEL COVER ASSY 2' - CP	CORRECTIONAL PKG
	K9-XL-759-3		PANEL COVER ASSY 3' - CP	CORRECTIONAL PKG
NI	K9-50302-21	1	5' GRAB BAR SUPPORT - XL-LG	MARINE APPLICATIONS

PARTS LIST

Rev. H 4/15/2016

Model No: 172T, 172TC, 172TSS Accu-Temp Electric Griddle				
Fig No	Part Number	Qty	Description	Application
1	K9-XL-719-611	1	PLATE ASSY 6' ACCU-REAR	172TCR
	K9-XL-720-61		TOP PLATE ASSY 6" LGR	172TBC
	K9-XL-0722-6		PLATE ASY 5' ACU	172T
	K9-XL-0722-61		PLATE ASY 6' ACU 4.5	172T-480VSJ, 172T-SJ, 172TSS
	K9-XL-0722-611		PLATE ASY 6' ACU TALL	172T-PE
	K9-XL-724-6		PLATE ASY 6' ACU CHROME	172TC
	K9-XL-724-64		PLTE ASY 6'ACU CHRME 3/4H	172TC-TE
2	2N-11030-30	6	ELMNT GRID 208V 1257W	172T
3	2N-11030-29	6	ELE GRD 208/240V4.5KW/6KW	172T
	2N-11030-04		ELMNT GRID 380V 5991W	172T-380V
	2N-11030-31		ELMNT GRID 480V 5991W	172T-480V, 172TC-480V 172T-480VSJ, 172T-PE-480V
	2N-11030-48		ELE GRD 440V 5991W XL/LG	172T-440VM
4	K9-XL-426	6	ELEMENT PAN PLATE	172T
5	K9-XL-439	6	ELEMENT PAN Z ASSY	172T
6	2H-XL-424	6	ELEMENT PAN INSULATION	172T
7	K9-XL-434	6	ELEMENT PAN ASSEMBLY	172T
8	2C-20201-04	36	WSHR FLT 3/8 USS PLTD	172T
9	2C-20301-06	36	NUT HEX 5/16-18 PLTD	172T
10	2C-20103-02	36	SCRW SM PLT 10 X .5 PHLSL	172T
11	K9-XL-227	2	SUPPLY WIRE BAFFLE	172T
12	2E-31200-02	2	GROUNDING LUG/+LABEL	172T, 172T-M
13	2C-20202-06	2	WSHR LOCK #10 INT STAR	172T, 172T-M
14	2E-30500-07	2	TRM BLOCK 3PLELRGE 125AMP	172T, 172T-440VM, 172T-480V, 172TC-480V 172T-480VSJ, 172T-PE-480V, 172TSS-480V
	2E-30500-02	2	TRM STRP 4 POLE 30A, 600V	172T-380V
15	2C-20103-01	12	SCRW SM PLT 10X7/8 PHIL	172T
16	2E-30500-22	2	TRMINL STRP 8POLE 50A250V	172T, 172T-PE, 172TSS
17	K9-XL-507	2	REAR COVER	172T
18	2C-20104-04	6	SCRW PHD ST 8-32X.5 PLTD PHILP	172T
19	2P-70903-08	2	PLG BTN PLTD MTL 5/16	172T
	2P-70903-09	10	PLG BTN PLTD MTL 7/16	172T
20	2A-72500-05	8	LEG 4 W/BOLT DOWN ADJ	172T-M, 172T-440VM, 172T-480VM
	2A-Z0314		FOOT, 4" DIE CAST	172T
21	2K-70801-02	4	SNAP BUSH 1 3/8 SB1375-16	172T
22	2T-30402-07	6	STAT ADJ 550° 48 C/T	172T (all voltages)
	2T-30402-09		STAT ADJ 550° 72 C/T	172T-480VSJ, 172T-PE, 172T-SJ, 172TC-TE, 172TSS
23	2C-20101-77	12	SCRW MS PLT 6-32 X .25 PHD	172T
24	K9-XL-524-2	2	ELECT BOX CVER SPT 3' & 4'	172T
25	Y9-31601-01-1	6	PILOT LT 250V 6LEAD BLK, w/TIN CLIP	172T
	Y9-31601-02-1		PILOT LT 480V 6LEAD BLK, w/TIN CLIP	172T-440VM, 172T-480V, 172TC-480V 172T-480VSJ, 172T-PE-480V, 172TSS-480V, 172T-380V
26	Y9-70701-14	6	KNOB ASSY 550° D, BLACK	172T-480VSJ, 172T-PE, 172T-SJ, 172TC-TE, 172TSS
	Y9-70701-14-2		KNOB ASSY 550° D, RED	
	Y9-70701-15		KNOB ASSY 550° D, BLACK	172T, 172T-440VM
	Y9-70701-15-2		KNOB ASSY 550° D, RED	
27	K9-XL-725-08	2	ELECT BOX ASY 3' XL\LG	172T
	K9-XL-725-081		ELECT BOX ASY 3' XL\LG	172T-480VSJ, 172T-PE, 172T-SJ, 172TC-TE, 172TSS
28	K9-XL-422-2	2	ACCESS PANEL ASSY 3'	172T
29	K9-50302-07	2	GREASE BUCKET ASSY S/S	172T
	K9-XL-235-2		GREASE BUCKET ASSY LGR S/S	172TBC
	K9-XL-235-30		GREASE BKT ASY REAR GUTTER	172TCR
30	K9-XL-228	2	BUCKET SLIDE ASSY	172T
	K9-XL-228-1		BUCKET SLIDE ASSY FNT & REAR	172TBC
	K9-XL-228-30		BUCKET SLIDE ASSY REAR	
31	K9-XL-504	6	STAT HOLDER	172T
	K9-XL-504-2		STAT HOLDER - ACCUTEMP	172TCR
32	K9-XL-759-3	2	PANEL COVER ASSY 3' - CP	CORRECTIONAL PKG
NI	K9-50302-18	1	6' GRAB BAR SUPPORT - XL-LG	172T-M, 172T-440VM, 172T-480VM

STAR INTERNATIONAL HOLDINGS INC. COMPANY
Star - Holman - Lang - Wells - Bloomfield - Toastmaster
10 Sunnen Drive, St. Louis, MO 63143 U.S.A.