Owner's Manual

Care and Operation

***CAUTION! Risk of Fire! DO NOT** store instruction manuals inside fireplace cavity. High temperatures could cause a fire.*

INSTALLER: Leave this manual with the appliance, not inside the appliance.
CONSUMER: Retain this manual for future reference. Do not store inside the appliance.

***NOTICE: DO NOT** discard this manual!*

outdoor lifestyles
by hearth & home technologies®

Models:

TWILIGHT-IFT

GAS-FIRED

C UL US
LISTED

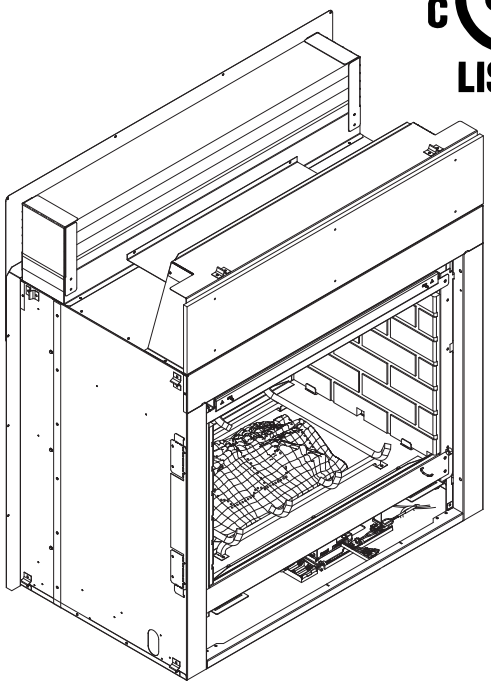

This appliance may be installed as an OEM installation in manufactured home (USA only) or mobile home and must be installed in accordance with the manufacturer's instructions and the *Manufactured Home Construction and Safety Standard, Title 24 CFR, Part 3280* in the United States, or the *Standard for Installation in Mobile Homes, CAN/CSA Z240 MH Series,* in Canada.

This appliance is only for use with the type(s) of gas indicated on the rating plate. This appliance is not convertible for use with other gases, unless a certified kit is used.

⚠ WARNING:
FIRE OR EXPLOSION HAZARD
Failure to follow safety warnings exactly could result in serious injury, death, or property damage.

- **DO NOT** store or use gasoline or other flammable vapors and liquids in the vicinity of this or any other appliance.
- **What to do if you smell gas**
  - **DO NOT** try to light any appliance.
  - **DO NOT** touch any electrical switch. **DO NOT** use any phone in your building.
  - Leave the building immediately.
  - Immediately call your gas supplier from a neighbor's phone. Follow the gas supplier's instructions.
  - If you cannot reach your gas supplier, call the fire department.
- Installation and service must be performed by a qualified installer, service agency, or the gas supplier.

⚠ DANGER

HOT GLASS WILL CAUSE BURNS.

DO NOT TOUCH GLASS UNTIL COOLED.

NEVER ALLOW CHILDREN TO TOUCH GLASS.

A barrier designed to reduce the risk of burns from the hot viewing glass is provided with this appliance and must be installed for the protection of children and other at-risk individuals.

1 Welcome

Read this manual before operating this appliance.
Please retain this Owner Manual for future reference.
Read the Installation Manual before making any installation or finishing changes.

A. Congratulations

Congratulations on selecting an Outdoor LifeStyles gas fireplace, an elegant and clean alternative to wood burning fireplaces. The Outdoor LifeStyles gas fireplace you have selected is designed to provide the utmost in safety, reliability, and efficiency.

As the owner of a new fireplace, you'll want to read and carefully follow all of the instructions contained in this owner's manual. Pay special attention to all cautions and warnings.

This owner's manual should be retained for future reference. We suggest that you keep it with your other important documents and product manuals.

The information contained in this owner's manual, unless noted otherwise, applies to all models and gas control systems.

Your new Outdoor LifeStyles gas fireplace will give you years of durable use and trouble-free enjoyment. Welcome to the Hearth & Home Technologies family of fireplace products!

Local Dealer Information

DEALER: *Fill in your name, address, phone and email information here and appliance information below.*

Dealer Name: _____

Address: _____

_____

Phone: _____

Email: _____

Appliance Information:

Brand: _____ Model Name: _____

Serial Number: _____ Date Installed: _____

Listing Label Information/Location

The model information regarding your specific fireplace can be found on the rating plate usually located in the control area of the fireplace.

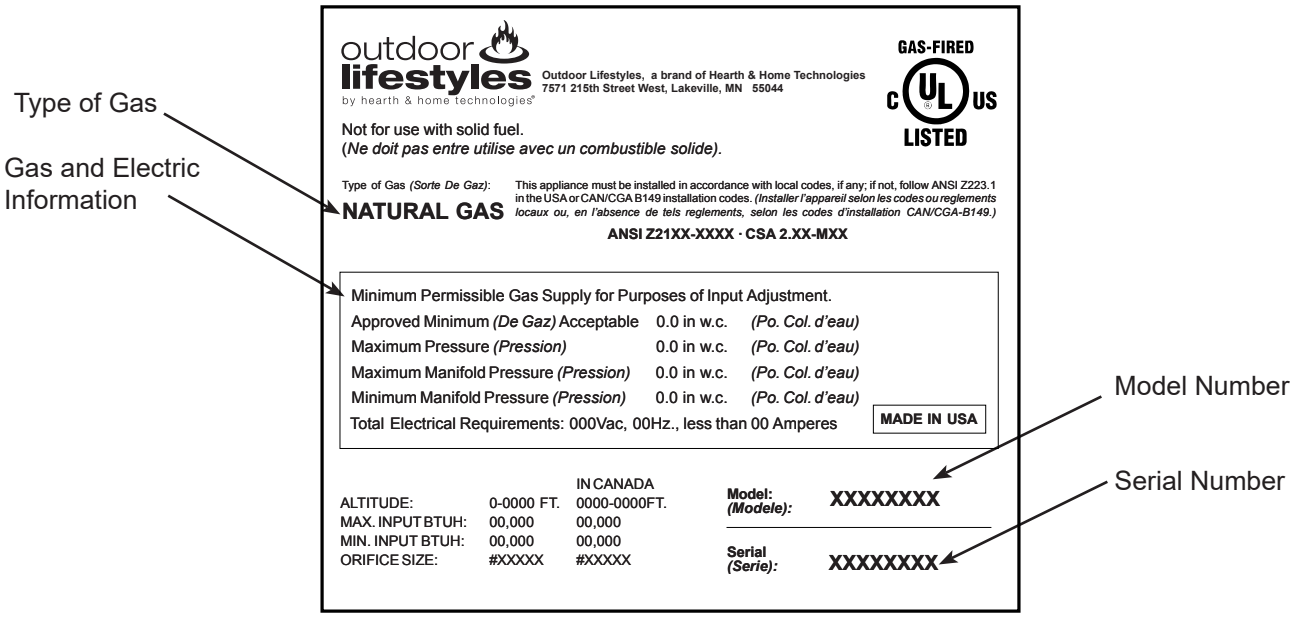

⚠ Safety Alert Key:

- ***DANGER!*** *Indicates a hazardous situation which, if not avoided will result in death or serious injury.*
- ***WARNING!*** *Indicates a hazardous situation which, if not avoided could result in death or serious injury.*
- ***CAUTION!*** *Indicates a hazardous situation which, if not avoided, could result in minor or moderate injury.*
- ***NOTICE:*** *Used to address practices not related to personal injury.*

Note: *The term "recommend" or "recommended" does not indicate a requirement. It is a best practice suggested by Hearth & Home Technologies®.*

Table of Contents

1 Welcome

A. Congratulations 2
B. Limited Warranty 4

2 Product Specific Information

A. Appliance Certification 6
B. Glass Specifications 6
C. Thermal Performance Data 6
D. Air Infiltration, Water Resistance and Structural Tests . . . 6
E. BTU Specifications 6

3 Important Safety and Operating Information

A. Appliance Safety 7
B. General Operating Parts 8
C. Fuel Specifications 8
D. Wall and Mantel Temperatures 8
E. Good Faith Wall Surface/TV Guidelines 8
F. Before Lighting Appliance 8
G. Lighting Instructions (IPI) 9
H. Appliance Break-In 10
I. Heat Management 10
J. Operation During A Power Outage 11
K. Detailed Component Operating Instructions - IntelliFire Touch 12

4 Maintenance and Service

A. Maintenance: Frequency and Tasks 14
B. Maintenance Tasks: Homeowner 14
C. Maintenance Tasks: Qualified Service Technician 17

5 Frequently Asked Questions and Troubleshooting

A. Frequently Asked Questions 18
B. Troubleshooting 19

6 Reference Materials

A. Accessories 21
B. Service Parts 22
C. Contact Information 25

➔ = Contains updated information.

B. Limited Warranty

Outdoor Lifestyles by Hearth & Home Technologies™
Limited Lifetime Warranty

Hearth & Home Technologies ("HHT") extends the following warranty for all Outdoor Lifestyles by HHT™ brand products ("Products") that are purchased from an HHT authorized dealer.

WARRANTY COVERAGE:

HHT warrants to the original owner of the Product at the site of installation, and to any transferee taking ownership of the Product at the site of installation within one year following the date of original purchase, that the Product will be free from defects in materials and workmanship at the time of manufacture. After installation, if covered components manufactured by HHT are found to be defective in materials or workmanship during the applicable warranty period, HHT will, at its option, repair or replace the covered components. This warranty is subject to conditions, exclusions and limitations as described below.

WARRANTY PERIOD:

The warranty period begins on the earlier of: (i) the date of invoice for the Product;
(ii) in the case of new home construction, the date of first occupancy of the residence or six months after the date of sale of the Product by an HHT authorized dealer, whichever occurs first; or (iii) the date 24 months following the date of Product shipment from HHT, regardless of the invoice or occupancy date.

WARRANTY CONDITIONS:

- The Limited Lifetime Warranty covers Products that are purchased through a HHT authorized dealer or distributor. A list of HHT authorized dealers is available on the HHT branded websites.
- This warranty is only valid while the Product remains at the site of original installation.
- Contact your installing dealer for warranty service. If the installing dealer is unable to provide necessary parts, contact the nearest HHT authorized dealer. Additional service fees may apply if you are seeking warranty service from a dealer other than the dealer from whom you originally purchased the Product.
- Check with your dealer in advance for any costs to you when arranging a warranty call. Travel and shipping charges for parts are not covered by this warranty.
- The Product body, metal firebox and heat exchanger carry the Limited Lifetime Warranty from the date of installation.
- The following components do not carry the Limited Lifetime Warranty but are warranted as follows:
  - One Year from Date of Installation:
    - Gas and Electrical Components or Gaskets
    - Nickel Plated Materials
      - Excludes tarnishing
    - Glass Breakage, Logs/Refractory/Glass Panels due to thermal breakage
      - Surface, hairline cracks, scratches and slight color changes are not covered
    - Venting, optional accessories, optional glass doors
    - Labor Associated with Warranty Service Work

WARRANTY EXCLUSIONS:

This warranty does not cover the following:

- Changes in surface finishes as a result of normal use. As a heating appliance, some changes in color of interior and exterior surface finishes may occur; this is not a flaw and not covered under warranty.
- Damage to printed, plated, or enameled surfaces caused by fingerprints, accidents, misuse, scratches, melted items, or other external sources and residues left on surfaces from the use of abrasive cleaners or polishes.
- Repair or replacement of parts that are subject to normal wear and tear during the warranty period. These parts include: paint, firebricks, grates, flame guides and the discoloration of glass.
- Minor expansion, contraction, or movement of certain parts causing noise. These conditions are normal and complaints related to this noise are not covered by this warranty.

Outdoor Lifestyles Warranty - 2108-975C – 6/5/2019 - 1

B. Limited Warranty *(continued)*

- Damages resulting from: (1) failure to install, operate, or maintain the Product in accordance with the installation instructions, operating instructions, and listing agent identification label furnished with the Product; (2) failure to install the Product in accordance with local building codes; (3) shipping or improper handling; (4) improper operation, abuse, misuse, continued operation with damaged, corroded or failed components, accident, or incorrectly performed repairs; (5) inadequate ventilation, negative pressure or environmental conditions, including, without limitation: hail, snow, ice, fallen branches, flooding, water damage and fading of color; (6) use of fuels other than those specified in the operating instructions; (7) installation or use of components not supplied with the Product or any other components not expressly authorized and approved by HHT; (8) modification of the Product not expressly authorized and approved by HHT in writing; and/or (9) interruptions or fluctuations of electrical power supply to the Product.
- Non-HHT venting components, hearth components or other accessories used in conjunction with the Product.
- Any part of a pre-existing fireplace system in which an insert or a decorative gas appliance is installed.
- The Product's capability to heat the desired space. Information is provided to assist the consumer and the dealer in selecting the proper appliance for the application. Consideration must be given to the Product's location and configuration and environmental conditions.

This warranty is void if:

- The Product has been over-fired or operated in atmospheres contaminated by chlorine, fluorine, or other damaging chemicals. Over-firing can be identified by, but not limited to, warped plates or tubes, rust colored cast iron, bubbling, cracking and discoloration of steel or enamel finishes and cracking or spalling of refractory or cementitious materials.
- The Product is subjected to prolonged periods of dampness, condensation, ice or snow.
- There is any damage to the Product or other components due to water or weather damage which is the result of, but not limited to, improper chimney or venting installation.

LIMITATIONS OF LIABILITY:

Repair or replacement in accordance with the provisions of this warranty will be the owner's exclusive remedy for and will constitute HHT's sole obligation under this warranty, under any other warranty (express or implied), or in contract, tort or otherwise; provided, however, that if HHT is unable to provide repair or replacement in an expedient and cost effective manner, HHT may discharge all such obligations by refunding the purchase price of the Product. No employee, agent, dealer, or other person is authorized to give any warranty on behalf of HHT. TO THE EXTENT ALLOWED BY LAW, HHT MAKES NO OTHER WARRANTY, EXPRESS OR IMPLIED, INCLUDING ANY WARRANTY OF MERCHANTABILITY OR FITNESS FOR A PARTICULAR PURPOSE. HHT WILL NOT BE LIABLE FOR ANY CONSEQUENTIAL OR INCIDENTAL DAMAGES ARISING OUT OF DEFECTS IN OR USE OF THE PRODUCTS. Some states do not allow exclusions or limitation of incidental or consequential damages, so these limitations may not apply to you. This warranty gives you specific rights; you also may have other rights, which vary from state to state. The duration of any implied warranty is limited to the duration of the warranty period specified herein.

2 Product Specific Information

A. Appliance Certification

MODEL: **TWILIGHT-IFT**
LABORATORY: **Underwriters Laboratories, Inc. (UL)**
TYPE: **Direct Vent Gas Appliance**
STANDARD: **ANSI Z21.50-2019 CSA 2.22-2019**

This product is listed to ANSI standards for "Vented Gas Fireplaces" and applicable sections of "Gas Burning Heating Appliances for Manufactured Homes and Recreational Vehicles", and "Gas Fired Appliances for Use at High Altitudes".

NOTICE: *This installation must conform with local codes. In the absence of local codes you must comply with the National Fuel Gas Code, ANSI Z223.1-latest edition in the U.S.A. and the CAN/CGA B149 Installation Codes in Canada.*

NOT INTENDED FOR USE AS A HEAT SOURCE.
This appliance is decorative in nature and not intended to be a source of heat.

NOT FOR USE WITH SOLID FUEL.
This appliance is not intended to burn solid fuel.

B. Glass Specifications

Tempered Glass (Interior Glass)

Hearth & Home Technologies appliances manufactured with tempered glass may be installed in hazardous locations such as bathtub enclosures as defined by the Consumer Product Safety Commission (CPSC). The tempered glass has been tested and certified to the requirements of **ANSI Z97.1** and **CPSC 16 CFR 1202** (Safety Glazing Certification Council **SGCC# 1595** and **1597**. Architectural Testing, Inc. Reports **02-31919.01** and **02-31917.01**).

This statement is in compliance with **CPSC 16 CFR Section 1201.5** "Certification and labeling requirements" which refers to **15** U.S. Code **(USC) 2063** stating "…Such certificate shall accompany the product or shall otherwise be furnished to any distributor or retailer to whom the product is delivered."

Some local building codes require the use of tempered glass with permanent marking in such locations. Glass meeting this requirement is available from the factory. Please contact your dealer or distributor to order.

Ceramic Glass (Exterior Glass)

This appliance is equipped with ceramic glass. Replace glass only with ceramic glass. Please contact your dealer for replacement glass.

C. Thermal Performance Data

Model: TWILIGHT-IFT		
Sound Transmission Class (STC)	Thermal Resistance (R Value)	Thermal Conductivity (K Value)
27	0.8hr-sq ft-ºF/BTU	1.25 BTU-in/hr-sq ft-ºF

D. Air Infiltration, Water Resistance and Structural Tests

The Hearth & Home Technologies TWILIGHT-IFT Indoor/Outdoor Appliance unit was tested to the following ASTM standards at the Stork Twin City Testing laboratory.

Air infiltration test **ASTM:E283-(04)**. The sample was tested at 1.57 psf (equivalent to a 25-mph windload). Water resistance test **ASTM:E331-00**. The test specimen was tested at the requested test pressures of 8.0 & 25.0 psf.

Structural test **ASTM:E330-02**. The unit was tested to a design pressure of 50-psf, a test pressure of 75-psf.

Test Results

Model	**Air Infiltration** (ASTM E283)	**Water Resistance** (ASTM E331)	**Structural Load** (ASTM E330)
TWILIGHT-IFT Indoor/Outdoor	0.07CFM/ft2	No leakage @ 8psf & 25psf	No Blowout @ 75psf

E. BTU Specifications

Model		**Input BTU/h**	**Orifice Size (DMS)**
TWILIGHT-IFT (NG)	***U.S. or Canada (0-2000 ft)***	38,000	32
	Canada (2000-4500 ft)	34,200	33
TWILIGHT-IFT (Propane)	***U.S. or Canada (0-2000 ft)***	36,000	50
	Canada (2000-4500 ft)	33,300	51

3 Important Safety and Operating Information

A. Appliance Safety

WARNING! DO NOT operate fireplace before reading and understanding operating instructions. *Failure to operate fireplace according to operating instructions could cause fire or injury.*

DANGER

HOT GLASS WILL CAUSE BURNS.

DO NOT TOUCH GLASS UNTIL COOLED.

NEVER ALLOW CHILDREN TO TOUCH GLASS.

- Keep children away.
- CAREFULLY SUPERVISE children in same room as fireplace.
- Alert children and adults to hazards of high temperatures.

High temperatures may ignite clothing or other flammable materials.

- Clothing, furniture, draperies, and other flammable materials must not be placed on or near the appliance.

A barrier designed to reduce the risk of burns from the hot viewing glass is provided with this appliance and must be installed for the protection of children and other at-risk individuals. DO NOT operate the appliance with the barrier removed. If the barrier becomes damaged, the barrier must be replaced with the manufacturer's barrier for this appliance.

Contact your dealer or Hearth & Home Technologies if the barrier is not present or help is needed to properly install one.

- Young children should be carefully supervised when they are in the same room as the appliance. Toddlers, young children and others may be susceptible to accidental contact burns.

  A physical barrier is recommended if there are at risk individuals in the house. To restrict access to a fireplace or stove, install an adjustable safety gate to keep toddlers, young children and other at risk individuals out of the room and away from hot surfaces.
- Install a switch lock or a wall/remote control with child protection lockout feature.
- Keep remote controls out of reach of children.
- Never leave children alone near a hot fireplace, whether operating or cooling down.
- Teach children to NEVER touch the fireplace.
- Consider not using the fireplace when children will be present.

Contact your dealer for more information, or visit: www.hpba.org/Product-Info/Fireplace-Stove-Heater/Glass-Fronts-Safety.

To prevent unintended operation when not using your fireplace for an extended period of time (summer months, vacations, trips, etc):

- Remove batteries from remote controls.
- Turn off wall controls.
- Unplug 6 volt transformer plug.
- Set the selector switch on the control module to the OFF position and remove batteries.
- Turn off gas to appliance.

WARNING: This product and the fuels used to operate this product (liquid propane or natural gas), and the products of combustion of such fuels, can expose you to chemicals including benzene, which is known to the State of California to cause cancer and reproductive harm. For more information go to: www.P65Warnings.ca.gov.

Clear Space

WARNING! DO NOT *place combustible objects in front of the fireplace or block louvers. High temperatures may start a fire. See Figure 3.1.*

Avoid placing candles and other heat-sensitive objects on mantel or hearth. Heat may damage these objects.

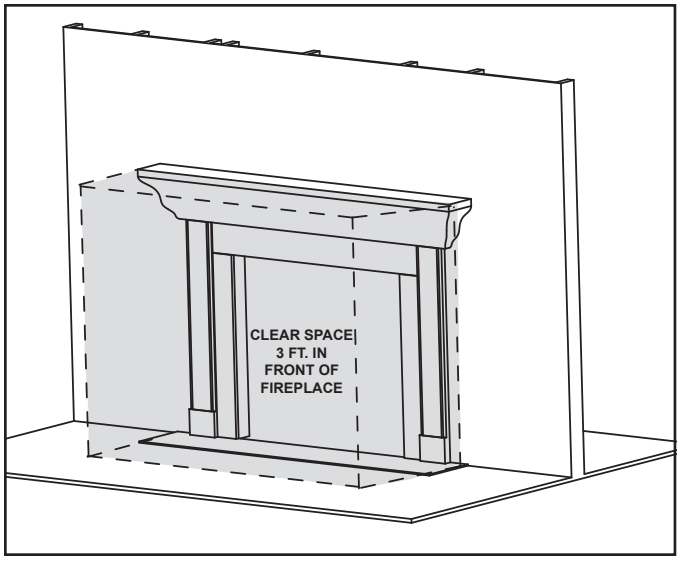

Figure 3.1 Clear Space

B. General Operating Parts

Figure 3.2 references the general operating parts of the appliance and the section of this manual in which they are discussed.

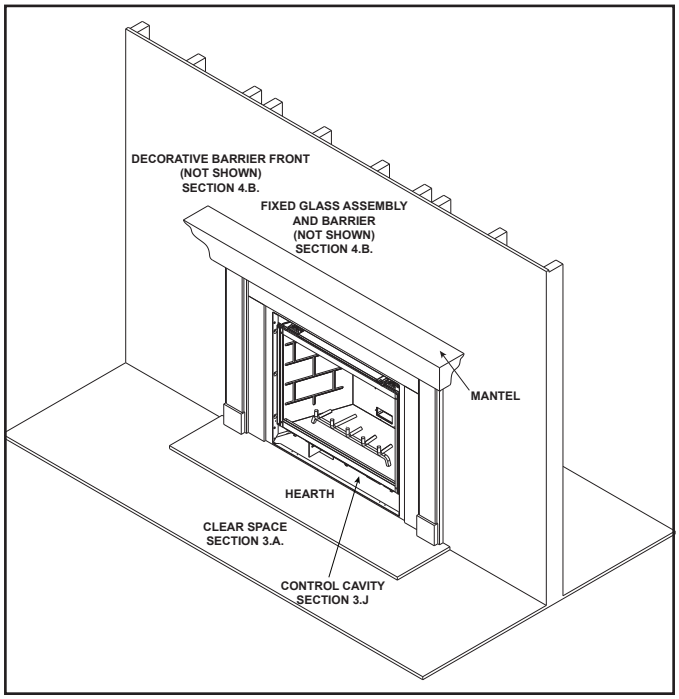

Figure 3.2 General Operating Parts

C. Fuel Specifications

WARNING! Risk of Fire or Explosion! *Appliance must be set up for compatible gas type!*

- This appliance is designed to operate on either natural gas or propane. Make sure the appliance is compatible with gas type selected for installation site.
- Conversions must be made by a qualified service technician using Hearth & Home Technologies specified and approved parts.

D. Wall and Mantel Temperatures

ANSI/CSA Standards
The American National Standards Institute (ANSI) and Canadian Standards Association (CSA) write the safety and performance standards to which all gas fireplaces are tested. The following are the allowable temperatures around and on a gas fireplace per the ANSI/CSA standards:

Combustible Mantel and Surfaces around a Fireplace
The allowable temperature rise above ambient is 117°F for all exposed combustible surfaces around the fireplace, including the mantel, when installed according to the installation instructions. Non-combustible surfaces and mantels do not have a maximum temperature limit; however the installation instructions must still be followed for any restrictions on placement of non-combustible materials on or around the fireplace.

> Example: The mantel above a fireplace in a room that is 70°F is allowed to reach but not exceed 187°F (70°F+117°F = 187°F).

E. Good Faith Wall Surface/TV Guidelines

If installing a television (TV) above the appliance, see appliance Installation Manual Section 2.B.

NOTICE: *Surface temperatures listed above are taken with a temperature measuring probe as prescribed by the test standard used for appliance certification. Temperatures on walls or mantels taken with an infrared thermometer may yield increased temperatures of up to 30 °F (17 °C) or more depending on the thermometer settings and material characteristics being measured. Use appropriate finishing materials that are able to withstand these conditions. For additional finishing guidelines, see Section 8 in the appliance installation manual.*

F. Before Lighting Appliance

Before operating this fireplace for the first time, **it is recommended that a qualified service technician**:

- Verify all shipping materials have been removed from inside and/or underneath the firebox.
- Review proper placement of logs, ember material and/or other decorative materials.
- Check the wiring.
- Check the air shutter adjustment.
- Ensure that there are no gas leaks.
- Ensure that the glass is sealed and in the proper position and that the integral barrier is in place.

WARNING! Risk of Fire or Asphyxiation! DO NOT *operate fireplace with fixed glass assembly removed.*

G. Lighting Instructions (IPI)

FOR YOUR SAFETY READ BEFORE LIGHTING

WARNING: If you do not follow these instructions exactly, a fire or explosion may result causing property damage, personal injury or loss of life.

A. This appliance is equipped with an intermittent pilot ignition (IPI) device which automatically lights the burner. **DO NOT** try to light the burner by hand.

B. **BEFORE LIGHTING**, smell all around the appliance area for gas. Be sure to smell next to the floor because some gas is heavier than air and will settle on the floor.

WHAT TO DO IF YOU SMELL GAS

- **DO NOT** try to light any appliance.
- **DO NOT** touch any electric switch; do not use any phone in your building.
- Immediately call your gas supplier from a neighbor's phone. Follow the gas supplier's instructions.
- If you cannot reach your gas supplier, call the fire department.

C. Use only your hand to push in or turn the gas control knob. Never use tools. If the knob will not push in or turn by hand, **DO NOT** try to repair it, call a qualified service technician. Force or attempted repair may result in a fire or explosion.

D. **DO NOT** use this appliance if any part has been under water. Immediately call a qualified service technician to inspect the appliance and to replace any part of the control system and any gas control which has been under water.

LIGHTING INSTRUCTIONS (IPI)

1. This appliance is equipped with an ignition device which automatically lights the burner. DO NOT try to light the burner by hand.

GAS VALVE

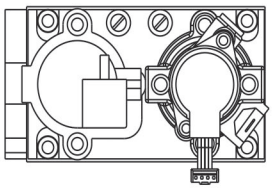

2. Wait five (5) minutes to clear out any gas. Then smell for gas, including near the floor. If you smell gas, STOP! Follow "B" in the Safety Information located on the top of this label. If you do not smell gas, go to next step.
3. To light the burner:
   Equipped with wall switch: Turn ON/OFF switch to ON.
   Equipped with remote or wall control: Press ON or FLAME button.
   Equipped with thermostat: Set temperature to desired setting.
4. If the appliance does not light after three tries, call your service technician or gas supplier.

TO TURN OFF GAS TO APPLIANCE

1. Equipped with wall switch: Turn ON/OFF switch to OFF.
   Equipped with remote or wall control: Press OFF button.
   Equipped with thermostat: Set temperature to lowest setting.
2. Service technician should turn off electric power to the control when performing service.

DANGER

HOT GLASS WILL CAUSE BURNS.
DO NOT TOUCH GLASS UNTIL COOLED.
NEVER ALLOW CHILDREN TO TOUCH GLASS.

A barrier designed to reduce the risk of burns from the hot viewing glass is provided with this appliance and must be installed for the protection of children and other at-risk individuals.

WARNING:

DO NOT CONNECT LINE VOLTAGE (110/120 VAC OR 220/240 VAC) TO THE CONTROL VALVE.

Improper installation, adjustment, alteration, service or maintenance can cause injury or property damage. Refer to the owner's information manual provided with this appliance. For assistance or additional information, consult a qualified installer, service agency or the gas supplier.

This appliance needs fresh air for safe operation and must be installed so there are provisions for adequate combustion and ventilation air.

WARNING: This product and the fuels used to operate this product (liquid propane or natural gas), and the products of combustion of such fuels, can expose you to chemicals including benzene, which is known to the State of California to cause cancer and reproductive harm. For more information go to: www.P65Warnings.ca.gov.

Keep burner and control compartment clean. See installation and operating instructions accompanying appliance.

CAUTION:

Hot while in operation. DO NOT touch. Keep children, clothing, furniture, gasoline and other liquids having flammable vapors away.

DO NOT operate the appliance with fixed glass assembly removed, cracked or broken. Replacement of the fixed glass assembly should be done by a licensed or qualified service person.

NOT FOR USE WITH SOLID FUEL

For use with natural gas and propane. A conversion kit, as supplied by the manufacturer, shall be used to convert this appliance to the alternate fuel.

Also Certified for Installation in a Bedroom or a Bedsitting Room.

This appliance must be installed in accordance with local codes, if any; if none, follow the *National Fuel Gas Code, ANSIZ223.1/ NFPA 54, or the National Gas and Propane Installation code, CSA B149.1.*

For additional information on operating your Hearth & Home Technologies fireplace, please refer to www.hearthnhome.com.

593-913K

H. Appliance Break-In

NOTICE! Open windows for air circulation during fireplace break-in.

- *Some people may be sensitive to smoke and odors.*
- *Smoke detectors may activate.*

Follow the initial break-in procedure below to cure the materials used to manufacture the fireplace and the finishing materials around it.

- The fireplace should be run three to four hours continuously on high.
- Turn the fireplace off and allow it to cool completely.
- Remove fixed glass assembly. See Section 4.B.
- Clean fixed glass assembly. See Section 4.B.
- Replace the fixed glass assembly.

Note: Some installations may require additional run time to cure. If odors persist after the initial break-in period, run the fireplace for an additional three to four hours continuously on high.

Note: Some IPI systems have a safety feature that automatically shuts down the fireplace after 9 hours of continuous operation without receiving a command from the remote control. If this occurs, restart the appliance.

I. Heat Management

Burn Rate

The TWILIGHT-IFT has a constant burn rate which is controlled by the gas valve. Therefore the flame height is not adjustable.

J. Operation During A Power Outage

The IntelliFire Touch intermittent pilot ignition system comes with a battery backup system that enables the system to operate in a power outage. The system offers seamless transition from household AC power to battery backup. A factory-installed battery pack is located in the control cavity of the appliance. See Figure 3.3. Battery longevity and performance will be affected by long term exposure to the service temperatures of this appliance.

NOTICE: *Batteries should only be used as a power source in the event of an emergency power outage. Batteries should not be used as a primary long-term power source. Batteries tend to corrode over time.*

To Operate Fireplace Using Battery Power (DC):

1. Access the control cavity of the appliance. See Figure 3.3 for location. The decorative barrier front and front refractory may need to be removed.
2. Locate the battery tray and insert four AA cell batteries. Battery polarity must be correct or module damage will occur. See Figure 3.3. A complete wiring diagram is included in the Electrical section of the appliance Installation Manual.
3. Turn the appliance on according to the instructions below for the appropriate type of control:

Standard Wall Switch or Factory-Installed ON/OFF Switch:

- Toggle the switch as you would under normal circumstances.

Wireless Remote:

- Remote receiver is integrated into the ignition module
- Use the remote to turn the appliance on.
- To preserve battery life, do not use the HI/LO flame or THERMOSTAT options.

Ignition Module:

- Locate the ignition module in the control cavity.
- Slide the ON/REMOTE/OFF switch to the ON position.

NOTICE: *Some functionality will be lost when using battery backup including fan, lights, or any other auxiliary functions that require household 110-120 VAC power.*

To Return to Operation Using Electrical (AC) Power

Standard Wall Switch or Factory-Installed ON/OFF Switch:

- Toggle the switch to OFF and remove the batteries from the battery tray. Replace door or decorative barrier front on appliance.

Wireless Remote:

- Slide the ON/REMOTE/OFF switch to the REMOTE position. Remove the batteries from the battery tray. Replace door or decorative barrier front on appliance.

Ignition Module:

- Slide the ON/REMOTE/OFF switch to the ON position.

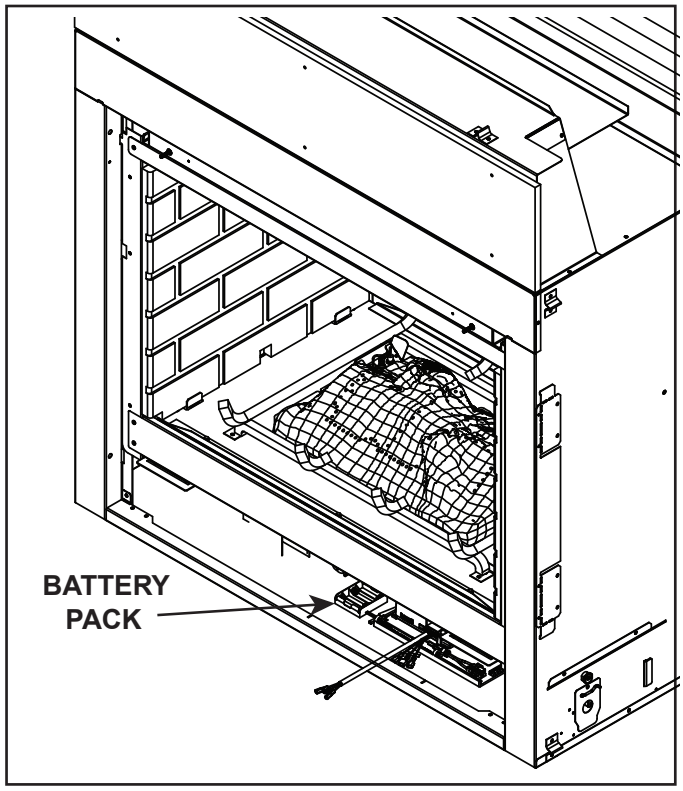

3.3 Battery Pack Location

K. Detailed Component Operating Instructions - IntelliFire Touch

IFT-ECM Detailed Operating Instruction

The IFT-RC400 and IFT-RC150 remotes are an option for this model. The IntelliFire Wi-Fi module (IFT-WFM) is also an option.

1. The Electronic Control Module (IFT-ECM) has a three-position ON/OFF/REMOTE selector switch that must be set for proper operation. See Figure 3.4. When changing switch positions, it is important to pause in each position for 1-2 seconds.

   OFF Position:

   The appliance will not respond to any commands from a wired wall switch, IFT-RC150 or IFT-RC400 remote controls. The unit should be in the OFF position during service, fuel conversion, and to reset the IFT-ECM in the event the system goes into a LOCK-OUT mode as the result of a system error. When switched to the OFF position while the appliance is operating, the system will shut down.

   ON Position:

   The appliance will ignite and run continuously at the HI flame setting. No adjustment in flame height is possible.

   Remote Position:

   The remote position allows operation of the appliance from a wired wall switch, IFT-RC400 or IFT-RC150 remote controls. The IFT-ECM switch must be in this position to pair the IFT-ECM with the IFT-ACM (if installed), and/or IFT-RC400 and IFT-RC150 remote controls. See the IFT-RC400 or IFT-RC150 installation manual for detailed instructions on pairing the IFT-ECM with the remote controls. After successfully pairing a IFT-RC400, all installed accessories can be controlled by the IFT-RC400 (see IFT-RC400 user manual). The RC150 allows the user to turn ON/OFF the flame in the appliance and activate the Cold Climate mode if desired. The IFT-ECM has a safety feature that will automatically shut down the fireplace after 9 hours of continuous operation without receiving a command from the IFT-RC400 or IFT-RC150.

The IFT-ECM has a safety feature that will automatically shut down the fireplace after 9 hours of continuous operation in the ON position, except when operated in active thermostat mode.

2. If multiple control options are installed, the IFT-ECM will respond to the last command from the wired wall switch, IFT-RC400 or IFT-RC150. The Pilot button on the IFT-ECM activates the Cold Climate function of the fireplace. This function lights the pilot flame ONLY to provide enough heat in the firebox to reduce condensation in cool, high humidity ambient conditions. To activate the Cold Climate press and hold the Pilot button for one second and release. The IFT-ECM will flash two green LED blinks, beep twice and light and rectify the pilot flame when pressed to activate. To turn off Cold Climate, press and hold the Pilot button for one second and release. The IFT-ECM will flash one green LED blink, beep once and shut down the pilot flame. If remote controls are paired with the IFT-ECM, this feature can also be activated with the IFT-RC400 and/or IFT-RC150.

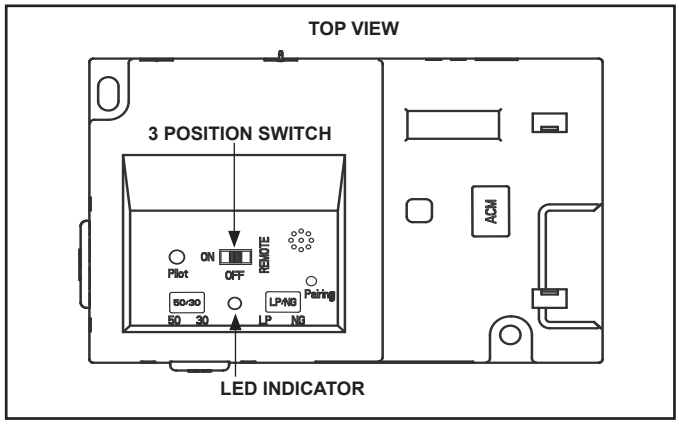

Figure 3.4. IFT-ECM

DANGER

Risk of Explosion

DO NOT cycle the ON/OFF/REM selector switch more than one time within a five minute period. Gas may accumulate in firebox. Call a qualified service technician.

4. An IFT-ECM reset is required if the module is in a lock-out condition. When this occurs, the appliance is shut down and the IFT-ECM status indicator LED will be blinking a RED/GREEN error code along with a one-time audible double- beep. If the IFT-ECM is in a lock-out condition, refer to the troubleshooting chart to interpret the error code and take corrective action as required. To reset the IFT-ECM after a lock-out error:

CAUTION! Risk of burns! *Appliance surfaces are hot when operating and during cool down. Use care and wear gloves when opening the front and accessing components inside the appliance.*

- Be aware the appliance may be HOT, use care in accessing the IFT-ECM.
- Set the IFT-ECM 3-position selector switch to OFF position.

- Wait five (5) minutes to allow possible accumulated gas to clear.
- Set the IFT-ECM 3-position selector switch to ON or REMOTE position. Module will beep once and flash a three GREEN LED code on successful startup.
- If placed in ON position, the appliance will ignite normally if the error condition was corrected.
- If placed in REMOTE position, use the paired IFT-RC400, IFT-RC150 or wired wall switch to start the appliance; appliance will ignite normally if the error condition was corrected.
- If the IFT-ECM re-enters the lock-out condition after these steps, call your dealer for service.

CAUTION! Risk of Electric Shock! *Avoid touching wires and electrical components in appliance control cavity.*

Appliance ON/OFF:

If an optional remote control or wall control is installed, it should be used to control the ON/OFF function of the appliance. Follow instructions included with the installed control.

To operate the appliance without a wall control or remote control, use the wired wall switch.

CAUTION! Risk of Electric Shock! *Avoid touching wires and electrical components in appliance control cavity.*

4 Maintenance and Service

IMPORTANT! Any safety screen, decorative barrier front or guard removed for servicing must be replaced prior to operating the fireplace.

When properly maintained, your fireplace will give you many years of trouble-free service. **Contact your dealer** to answer questions regarding proper operation, troubleshooting and service for your appliance. Visit www.hearthnhome.com to locate a dealer. We recommend annual service by a qualified service technician.

A. Maintenance: Frequency and Tasks

The matrix below is an overview of maintenance tasks to be performed on the appliance. Sections B and C give details and instructions needed to assist the appropriate person in performing the tasks.

Task	Frequency	To be completed by
Glass Cleaning	Seasonally	Homeowner
Surrounds, Decorative Barrier Fronts	Annually	
Remote Control	Seasonally	
Exhaust Termination	Seasonally	
Drip Tray	As Needed	
Gasket Seal and Glass Inspection	Annually	Qualified Service Technician
Log Inspection	Annually	
Firebox Inspection	Annually	
Control Compartment & firebox Top	Annually	
Electrical Service and Repair	As needed	
Burner Ignition & Operation	Annually	

B. Maintenance Tasks: Homeowner

Installation and repair should be done by a qualified service technician only. The fireplace should be inspected before use and at least annually by a professional service person.

The following tasks may be performed annually by the homeowner. If you are uncomfortable performing any of the listed tasks, please call your dealer for a service appointment.

More frequent cleaning may be required due to lint from carpeting or other factors. Control compartment, burner and circulating air passageway of the fireplace must be kept clean.

CAUTION! Risk of Burns! *The fireplace should be turned off and cooled before servicing.*

Note: If the appliance is installed on a screened porch, ensure the screen is kept clean to maintain proper airflow.

Glass Cleaning

Frequency: Seasonally

By: Homeowner

Tools Needed: Protective gloves, gas fireplace glass cleaner, drop cloth and a stable work surface.

CAUTION! Handle fixed glass assembly with care. *Glass is breakable.*

- *Avoid striking, scratching or slamming glass*
- ***DO NOT DO NOT*** *use abrasive cleaners*
- ***DO NOT*** *clean glass while it is hot*

- Prepare a work area large enough to accommodate fixed glass assembly and decorative barrier front by placing a drop cloth on a flat, stable surface.

Note: Fixed glass assembly and gasketing may have residue that can stain carpeting or floor surfaces.

- Remove decorative barrier front from fireplace and set aside on work surface.

WARNING! Risk of Asphyxiation! *Handle fixed glass assembly with care. Inspect the gasket to ensure it is undamaged and inspect the glass for cracks, chips or scratches.*

- ***DO NOT*** *operate fireplace with glass removed, cracked, broken or scratched.*
- *Replace as a complete assembly.*
- Remove fixed glass assembly from appliance. See instructions below for removing and replacing interior and exterior glass assemblies.
- Clean glass with a non-abrasive commercially available cleaner.
  - Light deposits: Use a soft cloth with soap and water
  - Heavy deposits: Use commercial fireplace glass cleaner (consult with your dealer)
- Replace fixed glass assembly.
- Inspect and operate all glass latches to ensure they move freely and no obstructions are present.
- Reinstall decorative barrier front.

Removing Fixed Glass Assembly- Interior

- Loosen and remove two wing nuts on top glass retainer bracket. Remove glass retainer bracket. See Figure 4.1.
- Lift glass assembly tabs up and out of the slots in the bottom glass frame mounting brackets.

Replacing Fixed Glass Assembly - Interior

- Position glass assembly with the bottom tabs positioned inside the slots of the bottom glass frame mounting brackets. See Figures 4.2 and 4.4.
- Position top of glass assembly, position top glass retainer bracket with the arrows pointing downward, and secure with two wing nuts. See Figures 4.1 - 4.3.

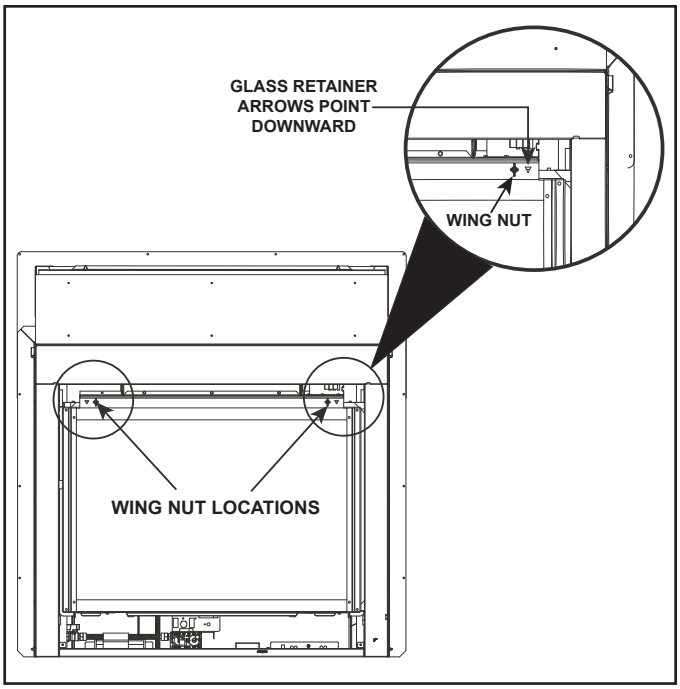

4.1 Glass Assembly - Wing Nut Location

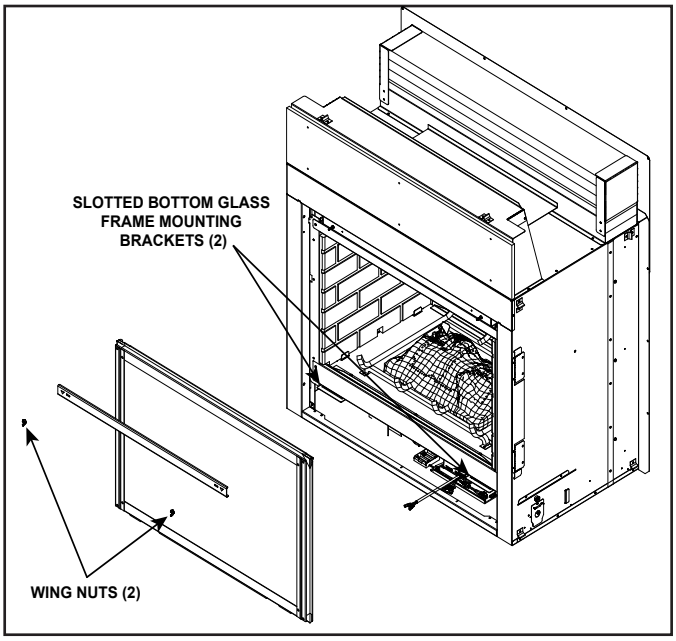

4.2 Glass Assembly - Removed

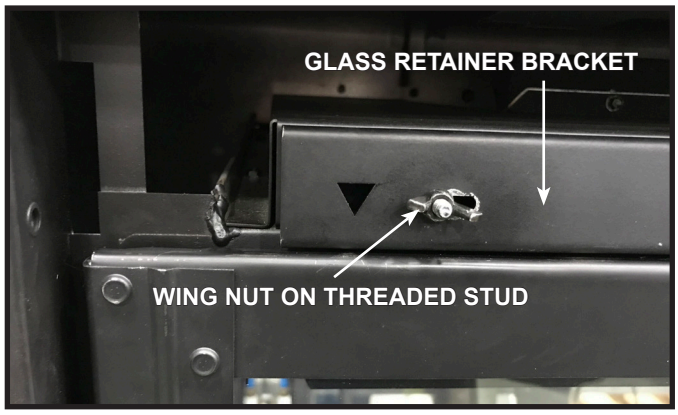

4.3 Glass Retainer Bracket & Wing Nut Detail

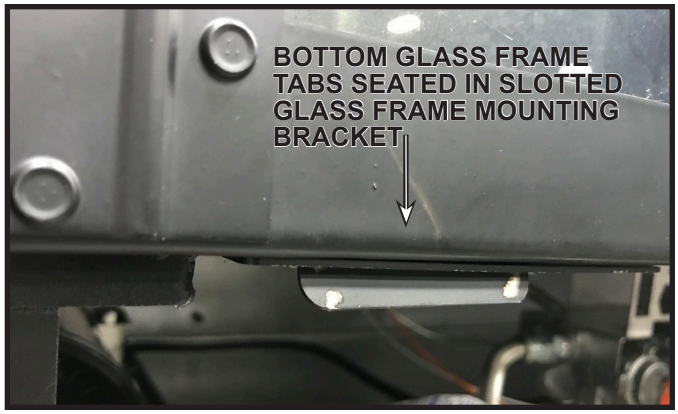

4.4 Botton Glass Frame Detail

Removing Fixed Glass Assembly- Exterior

- Remove vanity panel from appliance to expose glass latches.
- Pull glass latches out to release. Grasp glass assembly on sides and pull bottom toward you. Slide glass assembly down and out from under glass retainer.

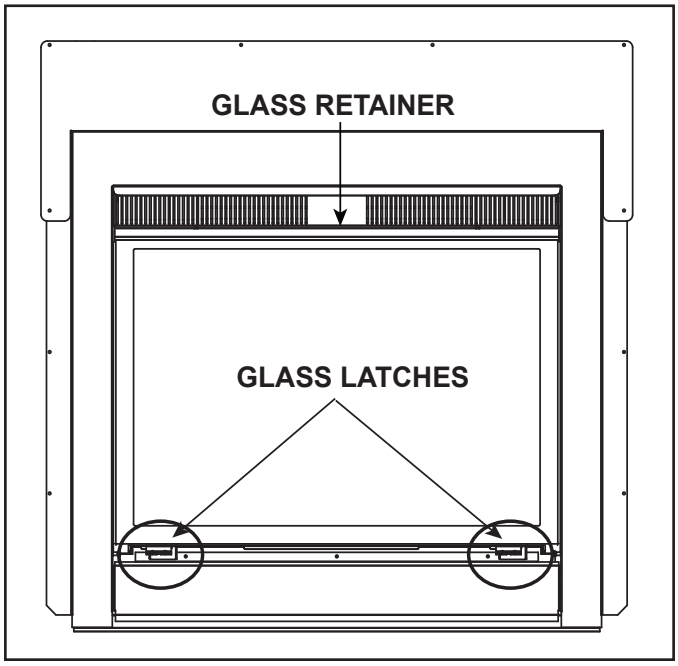

4.5 Glass Latch Locations - Exterior Side

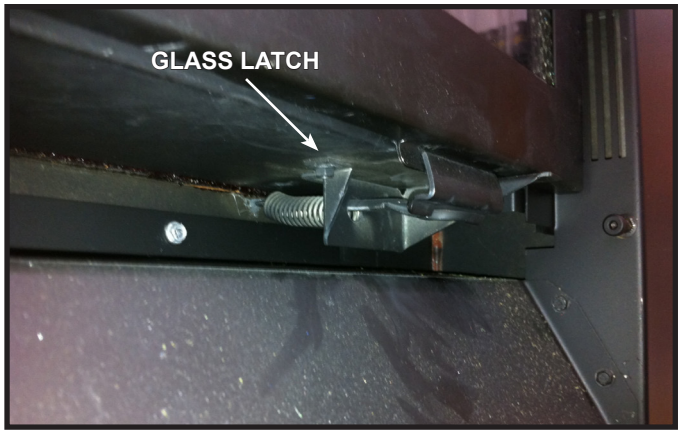

4.6 Glass Latch Detail - Exterior Side

Replacing Fixed Glass Assembly - Exterior

- Slide top of glass assembly into position under glass retainer. Position bottom of glass assembly and secure latches.
- Replace vanity panel.

Surrounds, Decorative Barrier Fronts

Frequency: Annually

By: Homeowner

Tools needed: Protective gloves, stable work surface

- Assess condition of screen and replace as necessary.
- Inspect for scratches, dents or other damage and repair as necessary.
- Check that air intake and discharge areas are not blocked.
- Vacuum and dust surfaces.

Remote Control (Optional)

Frequency: Seasonally

By: Homeowner

Tools needed: Replacement batteries and remote control instructions.

- Locate remote control transmitter and receiver.
- Verify operation of remote. Refer to remote control operation instructions for proper calibration and setup procedure.
- Place batteries as needed in remote transmitters and battery-powered receivers.
- Place remote control out of reach of children.

If not using your fireplace for an extended period of time (summer months, vacations/trips, etc), to prevent unintended operation:

- Remove batteries from remote controls
- Unplug 6 volt adapter plug.

Exhaust Termination

Frequency: Seasonally

By: Homeowner

Tools needed: Protective gloves and safety glasses.

- Inspect exhaust termination for blockage or obstruction such as plants, bird nests, leaves, snow, debris, etc.
- Verify exhaust termination clearance to subsequent construction (building additions, decks, fences, or sheds). See Installation Manual.

Drip Tray

Frequency: As Needed

By: Homeowner

Tools needed: Protective gloves

Under certain weather conditions, some water may accumulate inside the appliance. This is normal and expected. The control compartment contains a removable drip pans that may be cleaned as necessary.

- Note orientation of drip pan on shoulder screws before removing. Replace drip trays in same orientation as shown in Figure 4.7.
- Excess moisture can be eliminated by burning the appliance for a few hours.

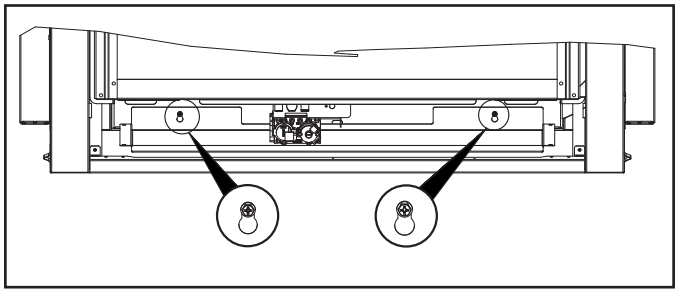

Figure 4.7 Drip Tray

C. Maintenance Tasks: Qualified Service Technician

The following tasks must be performed by a qualified service technician.

Gasket Seal and Glass Assembly Inspection

Frequency: Annually

By: Qualified Service Technician

Tools needed: Protective gloves, drop cloth and a stable work surface.

- Inspect gasket seal and its condition.
- Inspect fixed glass assembly for scratches and nicks that can lead to breakage when exposed to heat.
- Confirm there is no damage to glass or glass frame. Replace as necessary.
- Verify that fixed glass assembly is properly retained and attachment components are intact and not damaged. Replace as necessary.

Log Inspection

Frequency: Annually

By: Qualified Service Technician

Tools needed: Protective gloves.

- Inspect for damaged or missing logs. Replace as necessary. Refer to Installation Manual for log placement instructions.
- Verify correct log placement and no flame impingement causing sooting. Correct as necessary.

Firebox Inspection

Frequency: Annually

By: Qualified Service Technician

Tools needed: Protective gloves, sandpaper, steel wool, cloths, mineral spirits, primer and touch-up paint.

- Inspect for paint condition, warped surfaces, corrosion or perforation. Sand and repaint as necessary.
- Replace fireplace if firebox has been perforated.

Control Compartment and Firebox Top

Frequency: Annually

By: Qualified Service Technician

Tools needed: Protective gloves, vacuum cleaner, dust cloths

- Vacuum and wipe out dust, cobwebs, debris or pet hair. Use caution when cleaning these areas. Screw tips that have penetrated the sheet metal are sharp and should be avoided.
- Remove all foreign objects.
- Verify unobstructed air circulation.

Pilot and Burner Ignition and Operation

Frequency: Annually

By: Qualified Service Technician

Tools needed: Protective gloves, vacuum cleaner, whisk broom, flashlight, voltmeter, indexed drill bit set, and a manometer.

- Inspect orifice for soot, dirt and corrosion. Verify orifice size is correct. See Service Parts List for proper orifice sizing.
- Verify air shutter setting is correct. See Installation Manual for required air shutter setting. Verify air shutter is clear of dust and debris.
- Verify burner is properly secured and aligned with pilot or igniter.
- Clean off burner top, inspect for plugged ports, corrosion or deterioration. Replace burner if necessary.
- Inspect IPI flame sensing rod for soot, corrosion and deterioration. Polish with 320 grit Emery cloth and/or 3M™ Scotch-Brite Abrasive Hand Pad.
- Verify that there is not a short in flame sense circuit by checking continuity between pilot hood and flame sensing rod. Replace pilot as necessary.
- Verify manifold and inlet pressures. Adjust regulator as required.
- Check all accessible gas-carrying tubes, connections, pipes and other components for leaks.
- Inspect pilot flame pattern and strength. See Figure 4.8 for proper pilot flame pattern. Clean or replace orifice spud as necessary.
- Replace Glowing embers with new dime-size pieces. **DO NOT** block ports or obstruct lighting paths. Refer to appliance installation manual for proper ember placement.
- Check for smooth lighting and ignition carryover to all ports. Verify that there is no ignition delay. Inspect and ensure the lighting of the main burner occurs within four seconds of the main gas valve opening.
- Inspect for lifting or other flame problems.
- Verify batteries have been removed from battery back-up IPI systems to prevent premature battery failure or leaking.

NOTE: Appearance of rock jig, pilot shield and media tray may vary between appliance models.

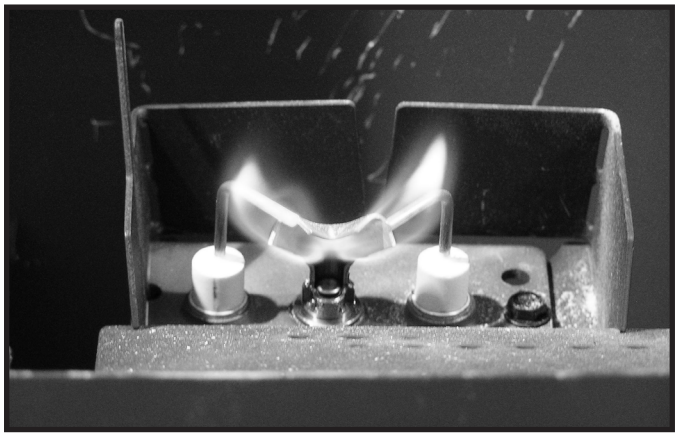

Figure 4.8 IPI Pilot Flame Patterns

5 Frequently Asked Questions and Troubleshooting

A. Frequently Asked Questions

ISSUE	SOLUTIONS
Condensation on the glass	This is a result of gas combustion and temperature variations. Prior to appliance being turned on, the inside of the glass has cooled below the dew point producing a byproduct of combustion: water in the form of condensation. As the fireplace glass warms, the condensation will disappear. In the summer, the inside of your fireplace contains hot humid air from outdoors. When the air from outdoors contacts glass cooled below the dew point by your air conditioning, moisture in that air will condense.
Blue flames	This is a result of normal operation and the flames will begin to yellow as the fireplace is allowed to burn for 20 to 40 minutes.
Erratic flames	Verify that the glass assembly is correctly installed and that all glass latches are engaged over the tabs on the glass frame. Inspect exhaust termination for blockage or obstruction.
Odor from fireplace	When first operated, this fireplace may release an odor for the first several hours. This is caused by the curing of the paint and the burning off of any oils remaining from manufacturing. Odor may also be released from finishing materials and adhesives used around the fireplace. These circumstances may require additional curing related to the installation environment.
Film on the glass	This is a normal result of the curing process of the paint and logs. Glass should be cleaned within 3 to 4 hours of initial burning to remove deposits left by oils from the manufacturing process. A non-abrasive cleaner such as gas fireplace glass cleaner may be necessary. Contact your dealer.
Metallic noise	Noise is caused by metal expanding and contracting as it heats up and cools down, similar to the sound produced by a furnace or heating duct. This noise does not affect the operation or longevity of the fireplace.
Is it normal to see the pilot flame burn continually?	In an intermittent pilot ignition system (IPI), the pilot flame should turn off when appliance is turned off. Some optional control systems available with IPI models may allow pilot flame to remain lit.
Power Outages (battery backup)	This appliance can be operated on battery power in the event of a power outage. To access the battery pack, the decorative barrier front, mesh and glass assembly must be removed. Refer to Section 3 for more details.
Wall above appliance feels hot to the touch.	No action necessary. This appliance ships with a non-combustible material attached. Specifications of the attached non-combustible material are listed in the Installer's Manual for this appliance.

Contact your dealer for additional information regarding operation and troubleshooting. Visit www.hearthnhome.com to locate a dealer.

B. Troubleshooting

With proper installation, operation, and maintenance your gas appliance will provide years of trouble-free service. If you do experience a problem, this troubleshooting guide will assist a qualified service technician in the diagnosis of a problem and the corrective action to be taken. This troubleshooting guide can only be used by a qualified service technician. Contact your dealer to arrange a service call by a qualified service technician.

Note to Qualified Service Technician: Additional resources including troubleshooting guides and service videos are available through Hearth & Home Technologies. Contact your dealer or access resources through your myhht.com account.

IntelliFire Touch

Error Codes:

ECM LED Error Codes	Description
3 Red: 1 Green	'Appliance Safely Disabled', pilot sparks for 90 sec, no flame rectification.
2 Red: 1 Green	'Error Pilot Flame', pilot valve solenoid not detected.
2 Red: 2 Green	Sparking feedback signal error, spark coil failure.
5 Red: 1 Green	'Error Power Vent' (if installed).

See Troubleshooting matrix for more detail on Lock-out Error Codes, Possible Causes and Corrective Actions.

Troubleshooting:

Symptom	Possible Cause	Corrective Action
Pilot won't light, module clicks but no spark 90 sec, 3 Red/1 Green Lock out.	Incorrect wiring.	Verify 'S' (White) sense wire and 'I' (orange) ignitor wire are connected to correct terminals on IFT-ECM.
	Loose connections or electrical shorts in wiring.	Verify no loose connections or electrical shorts in wiring from module to pilot assembly. Verify wire insulation is not damaged. Verify wires are not grounding out to chassis, pilot burner, or any other metal object. Replace any damaged wires.
	Ignitor gap is too large.	Verify spark gap is approximately 0.095" (2.41 mm) to 0.135" (3.43 mm).
Pilot won't light, there is no noise or spark.	No AC power, AC/DC adaptor faulty, backup batteries (if being used) depleted, IFT-ECM slider switch in OFF position.	Verify IFT-ECM slider switch is in ON or REM position. Verify AC power available to junction box. Verify AC/DC adaptor is plugged into junction box and ECM. Verify AC/DC adaptor output voltage is between 5.7-6.3 Vdc. If battery pack is used, check battery pack voltage is >4.2 V (if not, replace batteries).
	Shorted or loose connection in system wiring or wiring harness.	Verify system wiring configuration. Remove and reinstall wiring harness that plugs into module. Check continuity of wires in valve wiring harness. Replace any damaged components.
	Poor or no system ground.	Verify black ground wire in valve harness is connected to metal chassis of fireplace.
Pilot won't light, there is no noise or spark, 2 Red/1 Green Lockout.	Pilot solenoid not detected.	Check if valve harness orange wire is connected to pilot solenoid valve. Check pilot solenoid resistance, nominal is 40 ohms. If open or shorted, replace valve. Check valve harness wire continuity, if open replace 6-pin harness.
Pilot won't light, there is no noise or spark, 2 Red/2 Green Lockout.	Spark coil failure.	Replace ECM.

IntelliFire Touch - (continued)

Symptom	Possible Cause	Corrective Action
Pilot sparks but does not light, after 90 sec, 3 Red/1 Green Lockout	No gas supply.	Verify incoming gas line ball valve is 'Open'. Verify inlet pressure is within requirement for gas type used. Contact gas supplier.
	ECM has poor ground.	Verify wiring, check valve harness black wire is securely grounded to metal chassis.
	Gas valve defective.	Check pilot valve solenoid kick and hold voltages during ignition cycle. Kick V should be >1 V, hold V minimum 0.26 V. If voltages are OK, replace gas valve.
Pilot lights but main burner does not light. Pilot continues to spark for 90 sec then goes into 3 Red/1 Green Lockout.	No flame detected. Flame rectification issue.	Check if white sense lead is securely connected to 'S' terminal of IFT-ECM. Check resistance of sense lead between sense rod tip and connector to IFT-ECM, should be less than 1 ohm - if not, replace pilot assembly. Check system ground, ensure black valve harness wire is securely attached to metal chassis. Check wiring for damage. With system OFF, check resistance between tip of sense rod and pilot hood, should be resistance (>1 M-ohm).
	No flame detected or sense rod contamination.	With glass assembly installed, verify pilot flame is engulfing flame sense rod on pilot assembly. Verify inlet gas pressure is correct for gas type. Polish flame sense rod with fine steel wool to remove any contaminants that may have accumulated.
Pilot lights and rectifies, but main burner does not light.	Main valve solenoid.	Check if green wire in valve harness is connected to green main valve solenoid. Check main valve solenoid resistance, nominal is 60 ohms. If open or shorted, replace valve. Verify valve inlet pressure is correct for gas type.
Pilot and main do not light, ECM goes into 5 Red/1 Green Lockout.	Power Vent (PV) Failure.	Power Vent blower defective - check wiring to IFT-ACM, check if blower is working. Check if PV pressure switch is connected to brown and black wire in 6-pin valve wire harness. Check if pressure switch is closed (shorted) when PV blower is running. Refer to PV troubleshooting instructions.
Appliance lights and runs for a few minutes then shuts down and/or appliance cycle ON and OFF with less than 90 sec of ON time.	Shorted or loose connection in flame detection circuit.	Check if white sense lead is securely connected to 'S' terminal of IFT-ECM. Check resistance of sense lead between sense rod tip and connector to IFT-ECM, should be less than 1 ohm - if not, replace pilot assembly. Check system ground, ensure black valve harness wire is securely attached to metal chassis. Check wiring for damage. With system OFF, check resistance between tip of sense rod and pilot hood, should be resistance (>1 M-ohm).
	Poor flame rectification or contaminated sense rod.	With glass assembly installed, verify pilot flame is engulfing flame sense rod on pilot assembly. Verify inlet gas pressure is correct for gas type. Polish flame sense rod with fine steel wool to remove any contaminants that may have accumulated. Verify no soot deposits are in sense rod to pilot hood gap.
	Logs are set up wrong.	Remove and re-install logs per the log placement instructions.
	Damaged pilot assembly.	Verify the pilot assembly ceramic insulator around the flame sensing rod is not cracked, damaged or loose. Check resistance between tip of sense rod and IFT-ECM connector, should be less than 1 ohm. Replace pilot assembly if damage is detected.

6 Reference Materials

A. Accessories

WARNING! Risk of Fire and Electric Shock! *Use ONLY Hearth & Home Technologies-approved optional accessories with this appliance. Using non-listed accessories could result in a safety hazard and will void the warranty.*

Contact your dealer for more information and details, such as color options, on individual accessories. A qualified service technician must install the approved accessories. Operate installed accessories according to the included instructions.

Note: Some optional accessories must be installed at the time of appliance installation.
Refer to appliance Installation Manual Section 2.A, Design and Installation Considerations.

Options:

Remote Controls, Wall Controls and Wall Switches	
IFT-RC150-HNG	IntelliFire Touch wireless wall switch*
IFT-RC400	IntelliFire Touch remote control, docking station and auxiliary control module*
IntelliFire Wi-Fi module with IntelliFire App	
IFT-WFM	
Fan	
GFK-160T	The GFK-160T is not approved for use with the TWI-MOD decorative barrier front.

*** NOTE:** The Twilight-MD-IFT feature a non-adjustable valve. If an optional IFT-RC150-HNG or IFT-RC400 remote kit is installed the flame height adjustment function and thermostat function will not modulate the flame height. The available thermostat function will operate by cycling the appliance ON/OFF without flame height modulation.

36" Indoor/Outdoor See-thru Gas Fireplace - DV

Beginning Manufacturing Date:Mar 2021
Ending Manufacturing Date: Active

Log Set Assembly

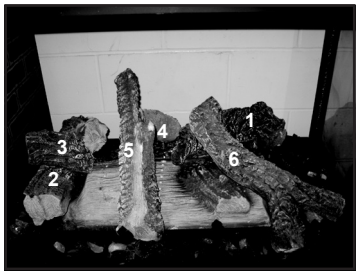

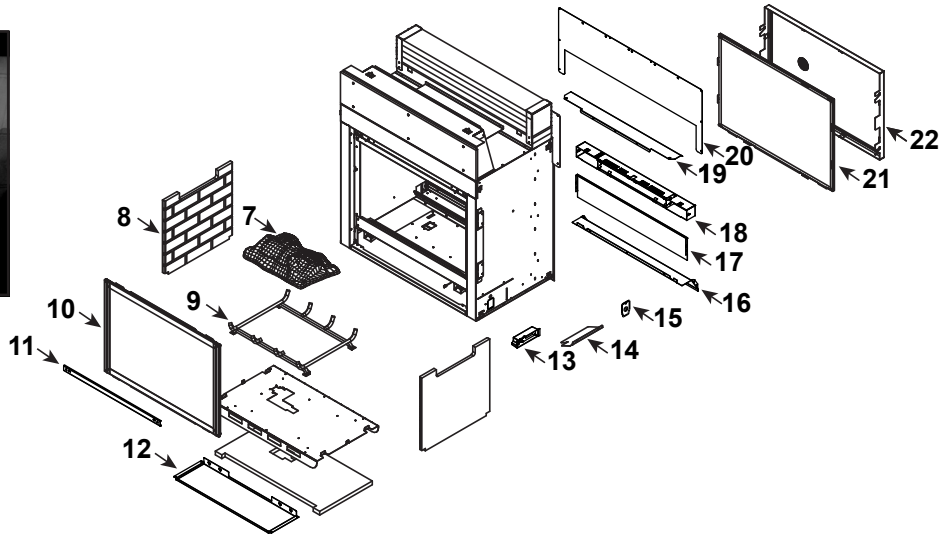

IMPORTANT: THIS IS DATED INFORMATION. Parts must be ordered from a dealer or distributor. **Hearth and Home Technologies does not sell directly to consumers**. Provide model number and serial number when requesting service parts from your dealer or distributor.

ITEM	DESCRIPTION	COMMENTS	PART NUMBER	Stocked in Depot
	Log Set Assembly		LOGS-MSR	Y
1	Log 1		SRV2005-701	
2	Log 2		SRV2005-700	
3	Log 3		SRV2005-702	
4	Log 4		SRV2005-703	
5	Log 5		SRV2005-704	
6	Log 6		SRV2005-705	
7	Burner Assembly		2668-008	Y
8	Refractory, Side		SRV2005-730	
9	Grate Assembly		2005-012	
10	Indoor Glass Assembly		GLA-6TROC	Y
11	Glass Clip		2668-121	Y
12	Drain Pan		2668-118	
13	Junction Box		SRV2326-013	Y
14	Junction Box Shield		2087-149	
15	Cover Plate		2668-114	
16	Deflection Plate		2668-136	
17	Cover Panel		2368-114	
18	Wind Screen Assembly		2668-004	
19	Hood-Exterior Side		2368-113	
20	Flashing		2668-159	
21	Outdoor Glass Assembly		GLA-OUTDOOR2	
22	Mesh Assembly, Exterior		2368-030	
	Mesh		2368-225	

Additional service part numbers appear on following page.

4/21

Beginning Manufacturing Date:Mar 2021
Ending Manufacturing Date: Active

#23 Valve Assembly

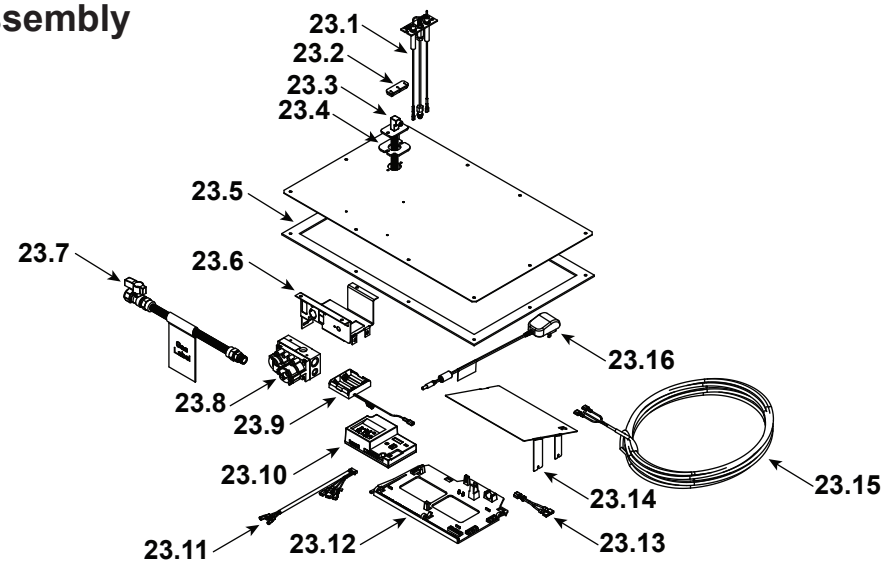

IMPORTANT: THIS IS DATED INFORMATION. Parts must be ordered from a dealer or distributor. **Hearth and Home Technologies does not sell directly to consumers**. Provide model number and serial number when requesting service parts from your dealer or distributor.

ITEM	DESCRIPTION	COMMENTS	PART NUMBER	Stocked in Depot
23.1	Pilot Assembly NG		2406-012	Y
	Pilot Assembly Propane	Convert 2406-012 with SRV593-527		Y
	Pilot Tube		SRV485-301	Y
23.2	3-Hole Grommet		SRV2118-420	
23.3	Flex Tube Assembly		4021-428	
23.4	Burner Neck Gasket		2025-407	
23.5	Valve Plate Gasket		2087-112	
23.6	Valve Bracket		2118-104	
23.7	Flex Ball Valve Assembly		SRV302-320	Y
23.8	Valve NG		SRV593-500	Y
	Valve Propane		SRV593-501	Y
	Male Connector	Pkg of 5	303-315/5	Y
23.9	Battery Pack		SRV2326-134	Y
23.10	Module, IFT Control		SRV2326-130	Y
23.11	Harness, IFT 6 Pin Wiring		SRV2326-132	Y
23.12	Component Tray		2532-170	
23.13	Jumper Wire		SRV2187-198	Y
23.14	Component Heat Shield		2668-144	
23.15	Wall Switch Wire		SRV2118-170	Y
23.16	Transformer, 6 Volt Wall		SRV2326-131	Y
	Burner Orifice (NG) (#32C)		SRV582-832	Y
	Burner Orifice (Propane) (#50C)		582-850	Y

Additional service part numbers appear on following page.

Beginning Manufacturing Date:Mar 2021
Ending Manufacturing Date: Active

IMPORTANT: THIS IS DATED INFORMATION. Parts must be ordered from a dealer or distributor. **Hearth and Home Technologies does not sell directly to consumers.** Provide model number and serial number when requesting service parts from your dealer or distributor.

ITEM	DESCRIPTION	COMMENTS	PART NUMBER	Stocked in Depot
	Glass Latch Assembly	Qty 2 req	2382-400	Y
	Lava Rock Bag		2005-790	
	Mineral Wool		050-721	
	Non-Combustible Boards (set only)		2108-030	
	Touch Up Paint	Exterior	SRV2087-999-A12	
		Interior	TUP-GBK-12	
	Conversion Kit Propane		LPK-TWI-IFT	Y
	Pilot Orifice NG		SRV593-528	Y
	Pilot Orifice Propane		SRV593-527	Y
	Regulator NG		SRVNGK-DXF	Y
	Regulator Propane		SRVLPK-DXF	Y

C. Contact Information

Please contact your Hearth & Home Technologies dealer with any questions or concerns.
For the location of your nearest Hearth & Home Technologies dealer, please visit www.hearthnhome.com.

Hearth & Home Technologies
7571 215th St, Lakeville, MN 55044

- NOTES -

_____

_____

_____

_____

_____

_____

_____

_____

_____

NOTICE

DO NOT DISCARD THIS MANUAL

- Important operating and maintenance instructions included.
- Read, understand and follow these instructions for safe installation and operation.
- Leave this manual with party responsible for use and operation.

This product may be covered by one or more of the following patents: (United States) 6601579, 6769426, 6863064, 7077122, 7074035, 7098269, 7234932, 7258116, 7322819, 7422011, 7470729, 7726300, 8147240, 9625149 or other U.S. and foreign patents pending.

2000-945E

Printed in U.S.A. - Copyright 2021