SAMSUNG

Repair Guide

Basic Model

HW-Q600F/ZC
HW-Q60CF/ZC

Applicable Model

HW-Q600F

Ver.1.0

SAMSUNG

NOTICE TO QUEBEC CONSUMERS – Warranty of Availability of Replacement Parts, Repair Services, and Maintenance and Repair Information

Replacement Parts

Although Samsung Canada will use reasonable efforts to make replacement parts available to customers (subject to availability and applicable lead times), Samsung Canada **does not guarantee** the availability of replacement parts within the meaning of the warranty of availability set out in sections 39 (paragraph 3), 39.1 and 39.2 of the Quebec *Consumer Protection Act*.

To purchase replacement parts and tools for self-repair, please visit: samsung.com/ca/support/buy-certified-parts

Repair Services

Although Samsung Canada offers repair services for Samsung products through Samsung Authorized Service Centers located in most major urban centers (defined as a city in Canada with a population equal or greater than 50,000) across Canada, Samsung Canada **does not guarantee** the availability of any repair services within the meaning of the warranty of availability set out in sections 39 (paragraph 3), 39.1 and 39.2 of the Quebec *Consumer Protection Act* in all locations, cities, or regions in Quebec.

To find your nearest Samsung Authorized Service Center, please visit: samsung.com/ca/support/service-center

Information for Maintenance or Repair

Although Samsung Canada provides information on the maintenance and/or repair of goods for select Samsung products (please visit samsung.com/ca/support/self-repair for more information), Samsung Canada **does not guarantee** the availability of information that is necessary to maintain or repair Samsung products within the meaning of the warranty of availability set out in sections 39 (paragraph 3), 39.1 and 39.2 of the Quebec *Consumer Protection*.

SAMSUNG

DISCLAIMER OF LIABILITY

Samsung is not liable for any damage or defect determined to be caused by repair by a non-authorized service provider, self-repair or non-professional repair of the product. Samsung is not liable for any resulting damage to the product, person, or property, or any injury or other product safety issue caused by or resulting from any repair, or any attempt to repair, any diagnosis, maintenance, or modification performed by any person, including, but not limited to, any of the following: (i) any indirect, incidental, special, or consequential damages (including but not limited to, damage to or loss of personal or commercial property, damage to reputation, loss of use, cost of purchase of replacement goods, etc.); (ii) any loss of data, goodwill, privacy, or profits or loss of business opportunity; and (iii) any inability to use, or reduced functionality of, the product. Any damage or defect to product resulting from a repair, or an attempt to repair, the product by any person (other than a Samsung certified service provider) will not be covered by the warranty. Samsung's liability shall be limited to the greatest extent permitted by law.

This manual contains confidential and proprietary information of Samsung Electronics Co., Ltd. ("Samsung Korea", and, together with its affiliates and subsidiaries "Samsung").
Samsung provides these manuals to individual consumers for Self-Repair purposes and to independent repair entities.

All text, graphics, user interfaces, visual interfaces, photographs, trademarks, and logos (collectively, "Content"), including but not limited to the design, structure, selection, coordination, "look and feel" and arrangement of such Content, contained in this manual is owned, controlled or licensed by or to Samsung, and is protected by trade dress, copyright, patent and trademark laws, and various other intellectual property rights and unfair competition laws.
No part of this manual or the Content may be copied, reproduced, republished, uploaded, posted, publicly displayed, encoded, translated, transmitted or distributed in any way (including "mirroring") to anyone, any entity, any other computer, server, Web site or other medium for publication or distribution or for any commercial purpose, without Samsung's express prior written consent.

Limitation of Liability. WHILE SAMSUNG MAKES ALL REASONABLE EFFORTS TO ENSURE THAT ALL INFORMATION IN THIS MANUAL IS CORRECT, SAMSUNG DOES NOT ASSUME ANY RESPONSIBILITY FOR THE ACCURACY OR COMPLETENESS OF ANY INFORMATION CONTAINED IN THIS MANUAL. SAMSUNG PROVIDES INFORMATION AND MATERIALS CONTAINED IN THIS MANUAL TO YOU ON AN "AS IS" BASIS WITHOUT WARRANTY OF ANY KIND, EITHER EXPRESS OR IMPLIED. SAMSUNG SPECIFICALLY DISCLAIMS ANY LIABILITY FOR ANY DIRECT, INDIRECT, INCIDENTAL, CONSEQUENTIAL OR SPECIAL DAMAGES ARISING OUT OF OR IN ANY WAY CONNECTED WITH YOUR ACCESS TO OR USE OF THE INFORMATION IN THIS MANUAL, INCLUDING BUT NOT LIMITED TO ANY LOSS OR DAMAGE CAUSED BY YOUR RELIANCE ON INFORMATION OBTAINED THROUGH THIS MANUAL. Some jurisdictions do not allow exclusion of certain warranties or limitations of liability, so the above limitations or exclusions may not apply to you. Samsung's liability in any case shall be limited to the greatest extent permitted by law.

Samsung reserves the right, at its sole discretion, to change, modify, add or remove portions of any part of this manual at any time. It is your responsibility to check the manual periodically for changes. Your use of the manual will mean that you accept and agree to the terms and conditions set out in this manual. If you do not agree to comply with the terms and conditions of this manual, in whole or in part, please stop using this manual immediately.

Contents

1. Precautions
   1-1. Safety Precautions
   1-2. Servicing Precautions
   1-3. Electrostatically Sensitive Devices (ESD) Precautions
   1-4. Installation Precautions
2. Disassembly & Reassembly
   2-1. Product Disassembly
   2-2. Product Reassembly

Self-Repair Legal Disclosures

Usage Notices
All content and information provided in this document, are subject to change without notice at any time. This document is intended for informational purposes only. You can download a copy of your product Manuals and Software. If you don't understand the information provided in this document or have any doubts about your ability to safely undertake the repair, visit https://www.samsung.com/us/support or call 1-800-Samsung for other repair options.

Precautions for Repair
Samsung is not liable for any damage or defect determined to be caused by repair by a non-authorized service provider, self-repair or non-professional repair of the product. Samsung is not liable for any resulting damage to the product, person, or property, or any injury or other product safety issue caused by any attempt to repair the product by any person other than a Samsung-authorized service provider. Any damage or defect to product resulting from a repair, or an attempt to repair, the product by any person other than a Samsung certified service provider will not be covered by the warranty.

Visit Samsung.com to view the product information, repair guides, related material, and safety information.

- Ensure that you have read and understood the repair guide and related safety information before attempting a repair and that you reference the guide ensuring that:
  - The repair in conducted in a safe and clean area.
  - Backup copies of all important data stored in the device are made.
  - The product is turned off and unplugged from the power source.
  - ESD precautions are taken where required.
  - The recommended tools and personal protective equipment are used.
  - The repair is made using Samsung genuine parts.
  - Where required, the recommended post repair testing and calibration is conducted.
  - Used parts are appropriately handled and disposed of.

5. Insulation Resistance Cold Check:
   (1) With the unit's AC plug disconnected from the AC source, connect an electrical jumper across the two AC prongs.
   (2) Set the power switch to ON.
   (3) Measure the resistance between the shorted AC plug and any exposed metallic parts.

   Example: screw heads, metal cabinets, antenna port. chassis, the measured resistance should be between 1 and 5.2 megohms. If there is no return path, the measured resistance should be "infinite."
   If the resistance is outside these limits, a shock hazard might exist.
   See Fig. 1-2 Insulation Resistance Test

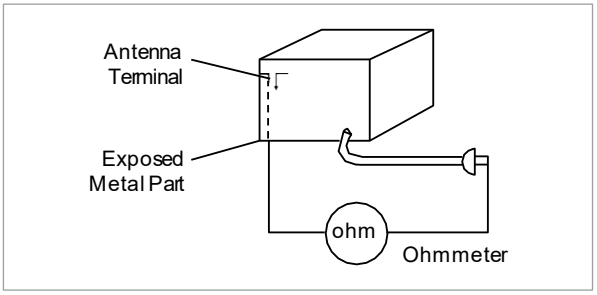

<Fig. 1-2 Insulation Resistance Test>

6. Components, parts and wiring that appear to have overheated or that are otherwise damaged should be replaced with parts that meet the original specifications. Always determine the cause of damage or overheating, and correct any potential hazards

7. Observe the original lead dress, especially near the following areas:
   Antenna wiring, sharp edges, and especially the AC and high voltage power supplies. Always inspect for pinched, out-of-place, or frayed wiring. Do not change the spacing between components and the printed circuit board.
   Check the AC power cord for damage. Make sure that no wires or components touch thermally hot parts.

8. Product Safety Notice:
   Some electrical and mechanical parts have special safety-related characteristics which might not be obvious from visual inspection. These safety features and the protection they give might be lost if the replacement component differs from the original-even if the replacement is rated for higher voltage, wattage, etc.

9. Components that are critical for safety are indicated in the circuit diagram by shading, ⚠ or ⚠.
   Use replacement components that have the same ratings, especially for flame resistance and dielectric strength specifications. A replacement part that does not have the same safety characteristics as the original might create shock, fire or other hazards.

1-2. Servicing Precautions

Warning

- An electrolytic capacitor installed with the wrong polarity might explode.

Caution

- Before servicing units covered by this service manual, read and follow the Safety Precautions section of this manual.

Note

- If unforeseen circumstances create conflict between the following servicing precautions and any of the safety precautions, always follow the safety precautions.

1. Servicing precautions are printed on the cabinet. Follow them.
2. Always unplug the unit's AC power cord from the AC power source before attempting to: (a) Remove or reinstall any component or assembly, (b) Disconnect an electrical plug or connector, (c) Connect a test component in parallel with an electrolytic capacitor.
3. Some components are raised above the printed circuit board for safety. An insulation tube or tape is sometimes used. The internal wiring may be clamped to prevent contact with thermally hot components. Reinstall all such elements to their original position.
4. After servicing, always check that the screws, components and wiring have been correctly reinstalled.
   Make sure that the portion around the serviced part has not been damaged.
5. Check the insulation between the blades of the AC plug and accessible conductive parts (examples: metal panels, input terminals and earphone jacks).
6. Insulation Checking Procedure: Disconnect the power cord from the AC source. Connect an insulation resistance meter (500V) to the blades of the AC plug.
7. The insulation resistance between each blade of the AC plug and accessible conductive parts (see above) should be greater than 1 megohm.
8. Never defeat any of the B+ voltage interlocks. Do not apply AC power to the unit (or any of its assemblies) unless all solid-state heat sinks are correctly installed.
9. Always connect a test instrument's ground lead to the instrument chassis ground before connecting the positive lead; always remove the instrument's ground lead last.

Warning

- First read the "Safety Precautions" section of this manual. If some unforeseen circumstance creates a conflict between the servicing and safety precautions, always follow the safety precautions.

1-3. Precautions for Electrostatically Sensitive Devices (ESDs)

- Some semiconductor ("solid state") devices are easily damaged by static electricity.
  Such components are called Electrostatically Sensitive Devices (ESDs). Examples include integrated circuits and some field-effect transistors. The following techniques will reduce the occurrence of component damage caused by static electricity.

1. Immediately before handling any semiconductor components or assemblies, drain the electrostatic charge from your body by touching a know n earth ground. Alternatively, wear a discharging wrist-strap device. (Be sure to remove it prior to applying pow er-this is an electric shock precaution.)
2. After removing an ESD-equipped assembly, place it on a conductive surface such as aluminum foil to prevent accumulation of electrostatic charge.
3. Do not use freon-propelled chemicals. These can generate electrical charges that damage ESDs.
4. Use only a grounded-tip soldering iron w hen soldering or unsoldering ESDs.
5. Use only an anti-static solder removal device. Many solder removal devices are not rated as "anti-static" (these can accumulate sufficient electrical charge to damage ESDs).
6. Do not remove a replacement ESD from its protective package until you are ready to install it.
   Most replacement ESDs are packaged w ith leads that are electrically shorted together by conductive foam, aluminum foil or other conductive materials.
7. Immediately before removing the protective material from the leads of a replacement ESD, touch the protective material to the chassis or circuit assembly into w hich the device will be installed.


Caution

- Be sure no pow er is applied to the chassis or circuit and observe all other safety precautions.

8. Minimize body motions w hen handling unpackaged replacement ESDs. Motions such as brushing clothes together, or lifting your foot from a carpeted floor can generate enough static electricity to damage an ESD.

1-4. Installation Precautions

1. Keep the product away from a heat source such as candle light, mosquito repellent incense, heating equipment, or direct sunlight. Otherwise, this may cause fire.
2. Do not install the product on a place that is shaking, tilted, unstable, or seriously vibrating. The product may drop to get damaged or injure a person. If using the product in a highly vibrating place, it may be broken or cause fire.
3. When moving the product, turn off the power switch and unplug all the connected cables with the product such as the power plug and antenna cable. If the power cord is damaged, this may cause electric shock or fire.
4. Secure room for ventilation. Keep at least 10 cm of distance from the rear wall, and at least 5 cm from either side wall.
5. Installing the product in a special place like below rather than normal environment may cause serious quality concerns due to its special conditions. If this is the case, make sure to contact a local Samsung service center before installing the product. (Special places: a place where a large amount of dust is accumulated; where chemical substances are used or the ambient temperature is too high or low; a place that is full of moisture or water; in transportation vehicles such as a car; or in public places such as the airport or subway station where the product is supposed to operate uninterruptedly for a long time)
6. Keep the packaging plastic wrapper out of children's reach. If children play with it improperly, they may get suffocated.
7. If installing the product on a display cabinet, shelf, desk, etc., keep the product from protruding on its lower side. If the product falls, it may break or cause physical injury. Use only the display cabinet or shelf that fully covers the product.
8. If using lithium batteries, carefully read the following precautions:

Caution

- Ensure the batteries are inserted in the right direction. Otherwise, they may cause an explosion. Dispose of used batteries according to the manufacturer's instructions.
- Do not expose the battery to fire.
- Do not disassemble, short-cut, or heat the battery.
- Use only the same type and size of batteries for replacement.
- Do not expose the battery to fire or excessive heat.

2. Disassembly and Reassembly

Warning

- As this product has parts that are sensitive to static electricity, be careful when handling them.

2-1. Product Disassembly

Caution

- Disconnect the product from the power source before disassembly.
- Follow these directions carefully; never use metal instruments to pry apart the cabinet.
- When disassembling the product, do not use any metal tools except for the provided jig.

Description	Picture Description
1 Separate the Main Body. 1 Unfasten 26 screws SCREW PART CODE :AH81-18012A	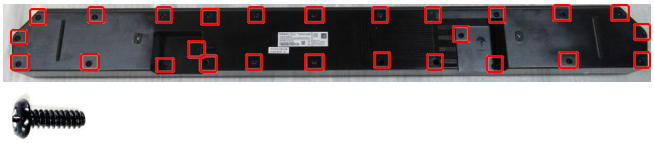
1-2 Lift up the Top case assembly from Main Bodye	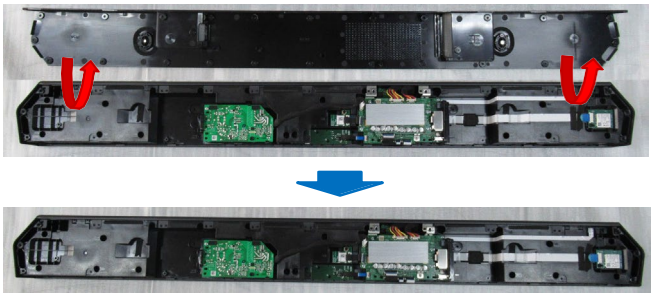
2 Separate the AMP Board Assembly. 1 Unfasten 4 screws and remove 5 Cables. SCREW PART CODE :AH81-18014A	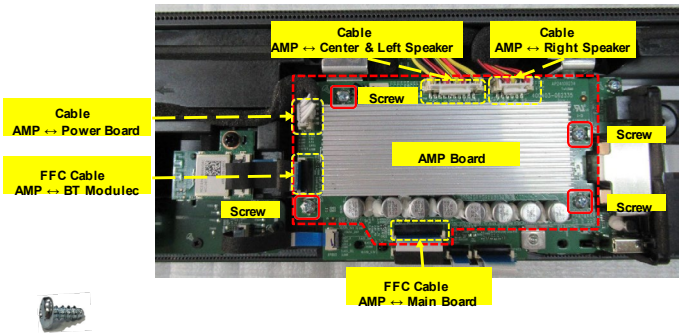
2-2 Pull out the AMP Board Assembly and the Thermal Pad.	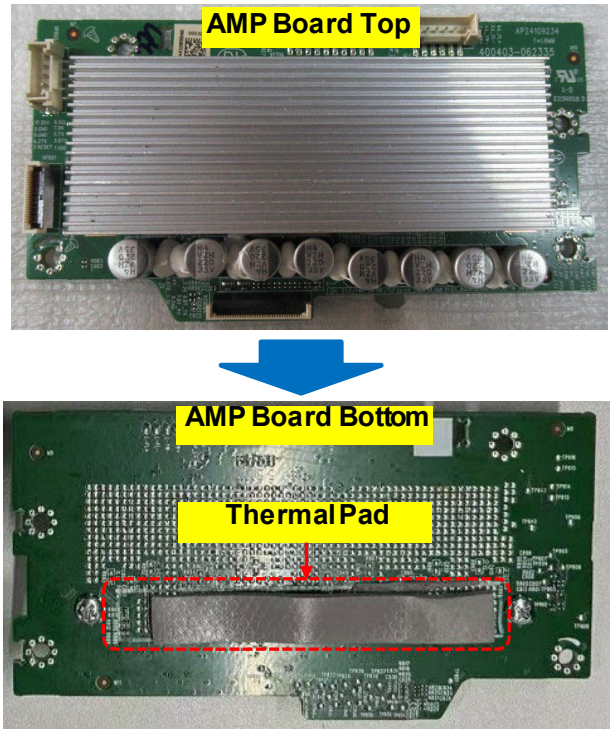

Description	Picture Description
3 Separate the Main Board Assembly 1 Unfasten 1 screw and remove 4 Cables SCREW PART CODE :AH81-18014A	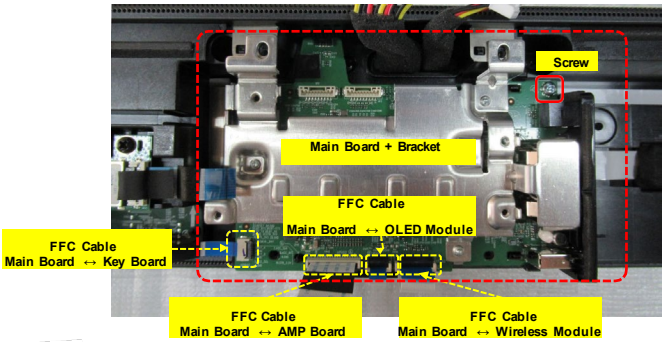 
3-2 Pull out the Main Board Assembly and remove the Bracket.	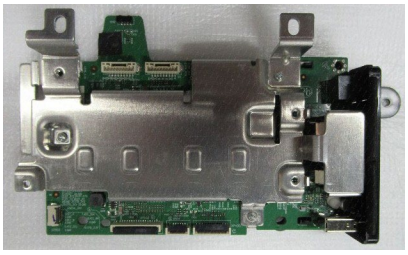 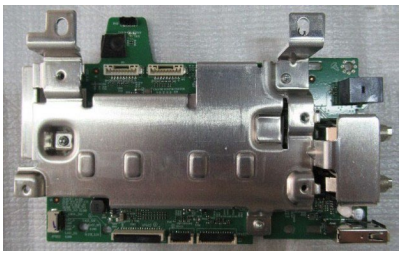 
4 Separate the Power Board 1 Unfasten 1 screw SCREW PART CODE :AH81-18013A	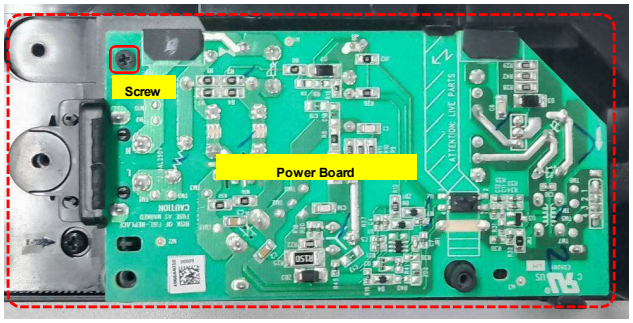 
4-2 Pull out the Power Board Assembly and remove the Bracket.	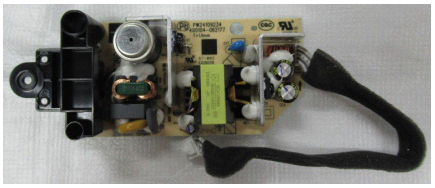  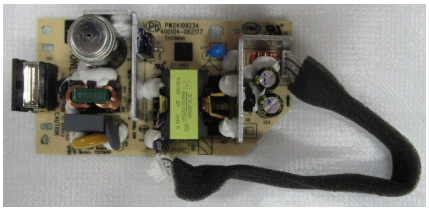

Description	Picture Description
5 *Separate Bluetooth Module and Key Board* 1 Unfasten 1 screw, and separate the Bluetooth Module and FFC Cable. SCREW PART CODE :AH81-18012A	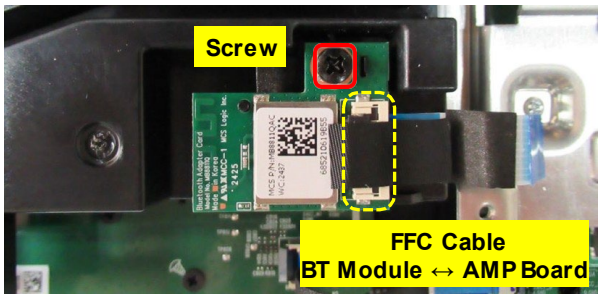  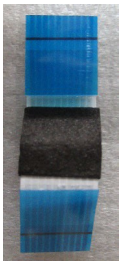 
5-2 Unfasten 4 screws, and separate the Key Board and FFC Cable. SCREW PART CODE :AH81-18013A	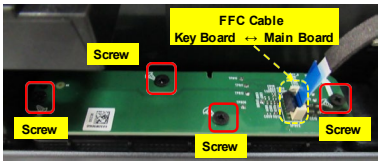   
6 *Separate the Wireless Module TX OLED Assembly.* 1 Unfasten 1 Screw and pull out the OLED Assembly. Separate the OLED Assembly and FFC Cable. SCREW PART CODE :AH81-18012A	 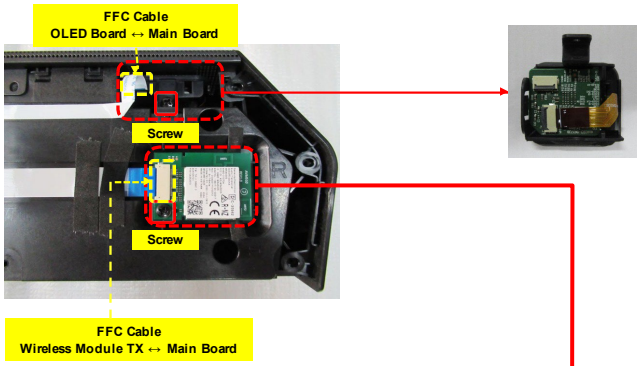 
6-2 Unfasten 1 Screw. Separate the Wireless Module and FFC Cable. SCREW PART CODE :AH81-18012A	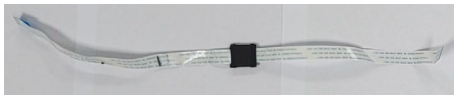  

2-2. Product Reassembly

Note

- Reassembly procedures are in the reverse order of disassembly procedures.
- The exterior may differ depending on the product.

Description	Picture Description
※ Cautions 1. Attach FFC Cables properly. If FFC cable is attached reversely, it may not work.	
2. Check the locking status of the connectors, If it is unlocked, it may not work. (AMP Board ↔ Main Board, AMP Board ↔ BT Module, Main Board ↔ Wireless Module, Main Board ↔ OLED Board)	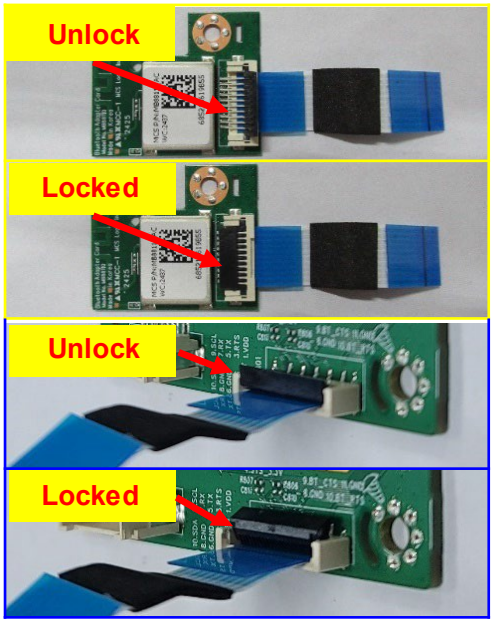
3. Please make sure that the Thermal Pad is accurately attached to the marked part of the AMP Board.	