Miele

Operating instructions
Washing machine

To avoid the risk of accidents or damage to the appliance, it is **essential** to read these instructions before it is installed and used for the first time.

en-AU, NZ

M.-Nr. 12 964 670

Contents

Caring for the environment **6**

Warning and Safety instructions **7**

Operating the washing machine **12**
Control panel 12
Touch display and sensor controls 12
Main menu 13
Examples on how to operate the appliance 14
Moving programmes 14

Before using for the first time **16**
Networking 17
Requirements for networking 18
3. Setting the clock format 18
4. Removing the transit bars 19
5. Commissioning TwinDos 19
6. Starting the calibration programme 22

Washing environmentally and economically **23**
Hygiene in the washing machine 23
Feedback 24

1. Preparing the laundry **25**

2. Selecting a programme **26**

3. Selecting programme settings **27**

4. Loading the washing machine **29**

5. Adding detergent **30**
TwinDos 30
TwinDos 30
Detergent dispenser drawer 31
CapDosing 32

6. Starting the programme **34**
Adding or removing laundry during a programme sequence (AddLoad) 34

7. At the end of the programme **35**

Spinning **36**

Programme chart **37**

Extras **43**
Quick 43
Water plus 43
Extra rinse 43
SingleWash 43

Pre-wash 43
Soak 43
Intensive 43
AllergoWash 43
Extra gentle 43
Extra quiet 44
Rinse hold 44

Wash programme chart - Extras 45

Programme sequence 46

Changing the programme sequence 49
Changing the programme (safety lock) 49
Interrupting a programme 49
Cancelling a programme 49

Garment care label symbols 50

Favourite programmes 51

Washing assistant 52

Timer 53
SmartStart 54

Detergent 55
The correct detergent 55
Detergent dispensing aids 55
Fabric softeners and liquid starch 55
Detergent recommendations 57

Replacing the TwinDos cartridge 58

Cleaning and care 59
External casing and fascia panel 59
Cleaning the detergent dispenser drawer 59
Cleaning the drum (Hygiene info) 61
TwinDos maintenance 61
Cleaning the water inlet filter 62

Problem solving guide 63
The programme does not start 63
Fault messages at the end of a programme 64
Messages or faults with the TwinDos system 65
General problems with the washing machine 67
An unsatisfactory wash result 68
The door will not open 69
Opening the door in the event of a blocked drain outlet and/or power cut 70

Contents

Service **72**
Contact in case of fault 72
Optional accessories 72
Warranty 72

Installation **73**
Front view 73
Rear view 74
Installation surface 75
Transporting the washing machine to its installation site 75
Removing the transport safety device 75
Fitting the transit bars 76
Levelling the machine 77
Screwing out and adjusting the feet 77
Installing under a continuous worktop 78
Plinth 78
Washer and dryer stack 78
The Miele water protection system 79
Connection to the water supply 80
Drainage 81
Using the elbow 82
Direct connection to a sink drain outlet 82
Electrical connection 83

Consumption data **84**

Technical data **85**

Settings **86**
Selecting settings 86
Changing a setting 86
Closing the Settings menu 86
Controls / Display ⚑ 86
Language ⚑ 86
Consumption 86
Code 87
Memory 87
Clock display 87
Volume 87
Display brightness 87
Temperature unit 87
“Display” off status 88

Programme sequence 88
TwinDos 88
Soiling 88
Water plus level 88
Maximum rinse level 89
Soak duration 89
Longer pre-wash Cottons 89
Gentle action 89
Anti-crease 89
Network 89
Miele@home 89
SmartGrid 90
Remote control 90
RemoteUpdate 91
Appliance parameters 91
Water intake 91
Legal information 92
Copyright and licences for operating and control software 92
Copyright and licences for the communication module 92
Installation requirements 92
Low water pressure 92
Suds cooling 93
Temperature reduction 93

Caring for the environment

Disposal of the packing material

The transport and protective packaging has been selected from materials which are environmentally friendly for disposal, and can normally be recycled.

Recycling the packaging reduces the use of raw materials in the manufacturing process and also reduces the amount of waste in landfill sites. Ensure that any plastic wrappings, bags etc. are disposed of safely and kept out of the reach of babies and young children. Danger of suffocation.

Only for Australia: Note for installer: Expanded polystyrene (EPS) packaging included. Please retain and dispose of EPS packaging responsibly. For further information, please contact Miele.

Disposing of your old appliance

Electrical and electronic appliances often contain valuable materials. They also contain specific materials, compounds and components, which were essential for their correct function and safety. These could be hazardous to human health and to the environment if disposed of with your domestic waste or if handled incorrectly. Please do not, therefore, dispose of your old appliance with your household waste.

Please dispose of it at your local community waste collection / recycling centre for electrical and electronic appliances. You are also responsible for deleting any personal data that may be stored on the appliance prior to disposal. Please ensure that your old appliance poses no risk to children while being stored prior to disposal.

This washing machine complies with all current local and national safety requirements. However, inappropriate use can lead to personal injury and damage to property.

Read the operating instructions carefully before using the washing machine. They contain important information on safety, installation, use and maintenance of the appliance. This prevents both personal injury and damage to the washing machine.

In accordance with standard IEC 60335-1, Miele expressly and strongly advises that you read and follow the instructions in "Installation", as well as in the "Warning and Safety instructions".

Miele cannot be held liable for injury or damage caused by non-compliance with these instructions.

Keep these operating instructions in a safe place and pass them on to any future owner.

Correct application

▶ This washing machine is designed for domestic use and for use in similar environments by guests in hotel or motel rooms, bed & breakfasts and other typical living quarters. This does not include common/shared facilities or commercial facilities within hotels, motels or bed & breakfasts.

▶ The washing machine is not suitable for outdoor use.

▶ It must only be used to wash garments which have been declared suitable for washing by the manufacturer indicated on the garment care label. Any other use is not permitted. Miele cannot be held liable for damage resulting from incorrect or improper use or operation.

▶ This washing machine is not intended for use by persons (including children) with reduced physical, sensory or mental capabilities, or lack of experience and knowledge, unless they have been given supervision or instruction concerning its use by a person responsible for their safety.

Safety with children

▶ Young children must not be allowed to use this appliance.

▶ Older children may only use the appliance when its operation has been clearly explained to them and they are able to use it safely, recognising the dangers of misuse.

▶ Cleaning work may only be carried out by older children under the supervision of an adult.

▶ Please supervise children in the vicinity of the washing machine and do not let them play with it.

Technical safety

▶ Please observe the instructions in “Installation” and “Technical data”.

▶ Before setting up the washing machine, check it for any externally visible damage. Do not install or use a damaged machine.

▶ Before connecting the washing machine, ensure that the connection data on the data plate (fuse rating, voltage and frequency) matches the mains electricity supply. If in any doubt, consult a qualified electrician.

▶ Temporary or permanent operation with a self-sufficient or non-mains synchronous energy supply system (e.g. isolated networks, back-up systems) is possible. A requirement for the operation is that the energy supply system complies with all current local and national requirements that apply to stand-alone, solar and/or battery systems. The protective measures provided in the installation and in this Miele product must also be assured in their function and operation in isolated operation or in non-mains synchronous operation, or replaced with equivalent measures in the installation.

▶ The electrical safety of this washing machine can only be guaranteed when continuity is complete between it and an effective earthing system which complies with current local and national safety regulations. It is most important that this basic safety requirement is present and regularly tested and, where there is any doubt, the household wiring system should be inspected by a qualified electrician. Miele cannot be held liable for the consequences of an inadequate earthing system (e.g. electric shock).

▶ Do not connect the washing machine to the mains electricity supply by a multi-socket adapter, extension lead or similar. These do not guarantee the required safety of the machine (fire hazard due to the risk of overheating).

▶ We recommend replacing faulty components with original Miele parts. If original Miele parts are installed correctly, Miele guarantees full compliance with safety requirements and the warranty remains valid.

▶ The electrical socket must be easily accessible after installation so that the machine can be disconnected from the electricity supply if necessary.

▶ Maintenance or repairs by unqualified persons could be extremely dangerous. The manufacturer cannot accept liability for unauthorised work. Maintenance or repairs must only be carried out by a qualified specialist or Miele Customer Service.

▶ The manufacturer's warranty will be invalidated if the washing machine is not repaired by a qualified specialist or Miele Customer Service.

▶ If the power supply cord is damaged, it must only be replaced with a specific power supply cord of the same type (available in the Miele online shop or from Miele Customer Service). For safety reasons, replacement may only be carried out by a suitably qualified specialist or Miele Customer Service.

▶ In the event of a fault or for cleaning purposes, the washing machine is only completely isolated from the electricity supply when:

- it is switched off at the wall socket and the plug is withdrawn, or
- it is switched off at the mains circuit breaker.

▶ The Miele Waterproof system protects from water damage provided the following conditions have been met:

- The machine is correctly plumbed in and connected to the electricity supply.
- If a fault or damage has been identified, the machine must be examined by a competent person before further use, and repaired if necessary.

▶ The water flow pressure must be at least 100 kPa and must not exceed 1000 kPa.

▶ This washing machine must not be installed and operated in mobile installations (e.g. on a ship).

▶ Do not make any alterations to the machine, unless authorised to do so by Miele.

▶ This washing machine is supplied with a special lamp to cope with particular conditions (e.g. temperature, moisture, chemical resistance, abrasion resistance and vibration). This lamp must only be used for the purpose for which it is intended. The lamp is not suitable for room lighting. Replacement lamps may only be fitted by a qualified electrician or a Miele authorised technician.
This washing machine contains 1 light source corresponding to energy efficiency rating G.

Correct use

▶ Do not install the washing machine in a room where there is a risk of frost. Frozen hoses may burst or split. The reliability of the electronic control unit may be impaired at temperatures below freezing point.

▶ Before using the machine for the first time, check that the transit bars at the rear of the machine have been removed (see “Installation - Removing the transit bars”). During spinning, a transit bar which is still in place may result in damage to both the machine and adjacent furniture or appliances.

▶ Turn off the tap if the machine is to be left for any length of time (e.g. holiday), especially if there is no floor drain (gully) in the immediate vicinity.

▶ Flooding danger.
If hooking the drain hose into a laundry washtub, check that the water can drain off quickly enough to prevent the laundry tub from overflowing. Make sure the drain hose is secure, so that the force of the water flowing out of the hose does not dislodge it.

▶ Take care to ensure that foreign objects (e.g. nails, pins, coins, paper clips) do not find their way into the machine with the laundry. These may damage components of the machine (e.g. suds container, drum), which in turn can result in damage to the laundry.

▶ Take care when opening the drum door after using the steam function. There is a danger of burning due to escaping steam and the high temperature of the surface of the drum as well as the porthole glass. Stand back away from the machine and wait until the steam has dissipated.

▶ The maximum load for this washing machine is 9,0 kg (dry weight). See the “Programme chart” for the maximum recommended loads for individual programmes.

▶ If the correct amount of detergent is dispensed, the machine should not need to be descaled. If, however, you do wish to descale it, only use a proprietary natural citric acid based descaling agent. Miele recommends using Miele descaler for washing machines which is available to order online at shop.miele.com (depending on country) or from Miele. Strictly observe the instructions on the packaging.

▶ Textiles which have been pre-treated in solvent based cleaning agents must be thoroughly rinsed in clean water before being washed in the machine.

▶ Do not use solvent based cleaning agents, e.g. those containing benzine, in this machine, as this may result in damage to component parts and create toxic fumes. Such agents also pose a fire and explosion hazard.

▶ Do not use solvent based cleaning agents, e.g. those containing benzine, to clean the external surfaces of the machine. They can cause damage to plastic surfaces.

▶ Only use dyes specified by the manufacturer as being suitable for use in a domestic washing machine. Always observe the manufacturer's instructions carefully.

▶ Colour run and dye removers contain sulphur compounds which can cause damage such as corrosion. Do not use these products in this machine.

▶ If detergent comes into contact with the eyes, rinse them thoroughly with lukewarm water immediately. If swallowed, seek medical assistance immediately and retain the packaging or label for reference. Those with skin problems or sensitive skin should avoid their skin coming into contact with detergent.

Accessories and spare parts

▶ We recommend using original Miele accessories. Using spare parts or accessories from other manufacturers will invalidate the warranty and Miele cannot accept liability.

▶ A Miele tumble dryer can be stacked on top of a Miele washing machine using the appropriate stacking kit (available as an optional accessory). Please make sure you order the correct one for the Miele washing machine and Miele tumble dryer.

▶ Miele original spare parts are kept in stock for at least 10 years and up to 15 years after discontinuation of your washing machine.

Miele cannot be held liable for damage caused by non-compliance with these Warning and Safety instructions.

Operating the washing machine

Control panel

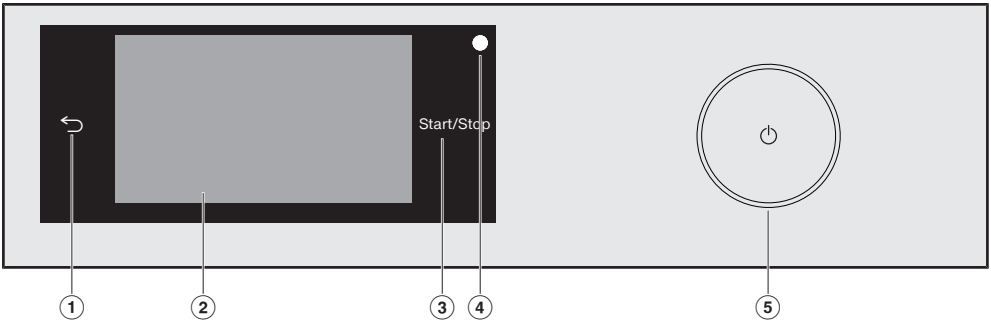

① ⮌ **sensor**
Takes you back a level in a menu.

② **Touch display**

③ ***Start/Stop* sensor**
Touching the *Start/Stop* sensor starts the selected programme or cancels a programme that has already started. The programme can be started as soon as the sensor is flashing on and off. The sensor lights up constantly once the programme has started.

④ **Optical interface**
For service technicians.

⑤ ⏻ **sensor**
For switching the washing machine on and off. To save energy, the washing machine will switch off automatically. This occurs 15 minutes after the end of the programme/Anti-crease phase, or after being switched on if no further selection is made.

Touch display and sensor controls

The ⮌ and *Start/Stop* sensors and the sensors in the display react to fingertip contact.

The touch display can be scratched by pointed or sharp objects, e.g. pens.
Only touch the display with your fingers.

Main menu

After switching on the washing machine, the main menu will appear in the display.

You can access all important sub-menus from the main menu.

Touch the ⌂ sensor at any time to return to the main menu. Values that have not yet been confirmed are not saved when you return to the main menu.

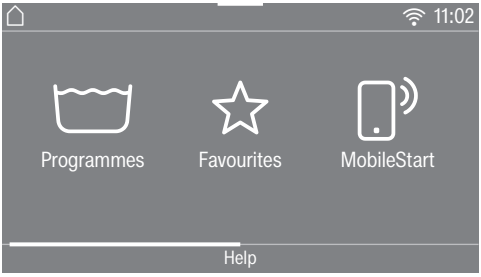

Main menu page 1

You can scroll to the second page of the main menu by swiping your finger across the display.

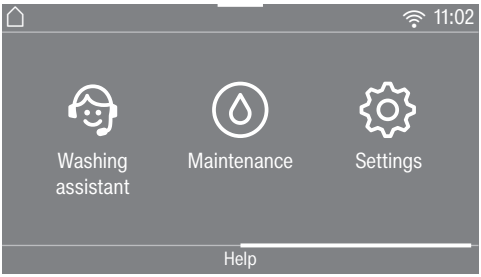

Main menu page 2

The ᯤ symbol next to the time of day is displayed when the washing machine is connected to a network.

Programmes

You can select various wash programmes.

Favourites

You can save up to 12 of your own customised wash programmes (see “Favourite programmes”).

MobileStart

With MobileStart you can operate your washing machine remotely with the Miele App.

The Remote control setting must be switched on.

Touch the MobileStart sensor control and follow the instructions in the display.

Washing assistant

The *Washing assistant* provides a step-by-step guide to selecting the optimum wash programme for your laundry (see “Washing assistant”).

Maintenance

Maintenance options for the TwinDos system and the Clean machine programme are located in the Maintenance menu (see “Cleaning and care”).

Settings

You can alter the washing machine’s electronics to suit changing requirements in the *Settings* menu (see “Settings”).

Examples on how to operate the appliance

Selection lists

Programmes menu (single selection)

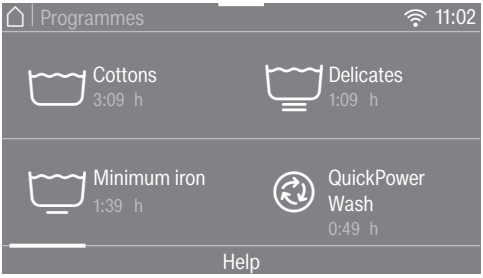

You can scroll to the right or the left by swiping your finger across the screen. Place your finger on the touch display and swipe it in the direction you want.

The orange bar under the pictures shows that there are further options to choose from.

To select a wash programme, touch a programme name.

The display will change to the standard display for that programme.

Extras menu (multiple selection)

You can scroll to the right or the left by swiping your finger across the screen. Place your finger on the touch display and swipe it in the direction you want.

The orange bar under the pictures shows that there are further options to choose from.

To select *Extras*, touch one or several sensor with *Extras*.

Currently selected *Extras* are marked orange.

To deselect an *Extra*, simply touch the *Extra* sensor again.

Touch the OK sensor to activate the selected *Extras*.

Moving programmes

You can move the programmes around in the menu to change the sequence in which they are displayed.

- Place your finger on the programme you wish to move until a border is displayed around it.
- To move the programme, swipe your finger in the required direction.
- Remove your finger when the programme reaches the new location.

The programme has moved.

Setting numerical values

You can set numerical values in some menus.

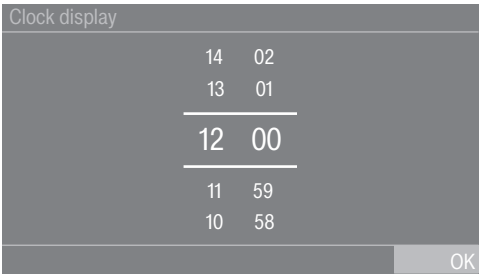

Enter the numbers by swiping upwards or downwards. Place your finger on the number that you want to change and move your finger in the desired direction. Touch the OK sensor to accept the set numerical value.

Useful tip: Briefly touching the numbers will bring up the numerical keypad. Once a valid number has been entered, the OK sensor will be highlighted green.

Pull-down menu

The pull-down menu can be used to display information, e.g. about a wash programme.

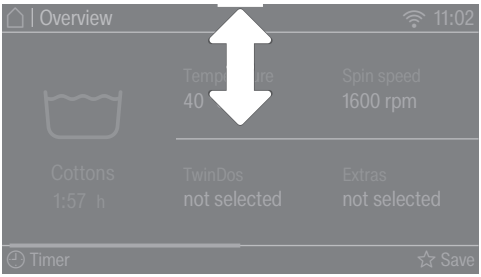

Touch the top edge of the screen in the middle and drag down with your finger.

Help display

Help appears along the bottom line of the display in the main menu and the Programmes menu.

- Touch the Help sensor to display the text.
- Touch the Close sensor to return to the previous screen.

Exiting a menu

- Touch the ⮌ sensor to return to the previous screen.

Entries selected before this which have not been confirmed with OK will not be saved.

⚠ Damage resulting from incorrect installation and connection.
Installing and connecting the washing machine incorrectly will cause serious damage to property.
See “Installation” in the operating instructions.

This washing machine has undergone a complete functional test at the factory and there will be some residual water in the drum from this process.

Removing the protective foil and advertising stickers

■ Remove:

- the protective foil from the door (if present).
- any advertising stickers from the front and the lid.

Please do not remove any labels (e.g. the data plate) which are visible when you open the door.

Removing the detergent cartridges and the drain hose elbow from the drum

Two detergent cartridges for automatic detergent dispensing and an elbow piece for the drain hose are stored in the drum.

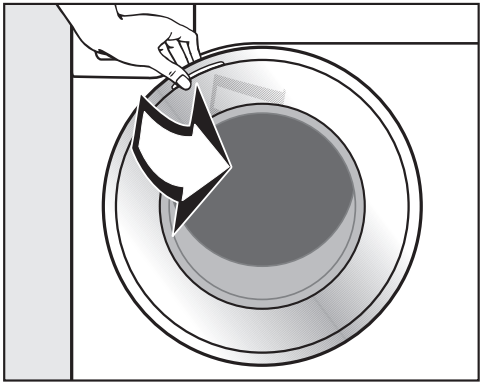

■ Pull open the door.

■ Take the two cartridges and the elbow piece out of the drum.

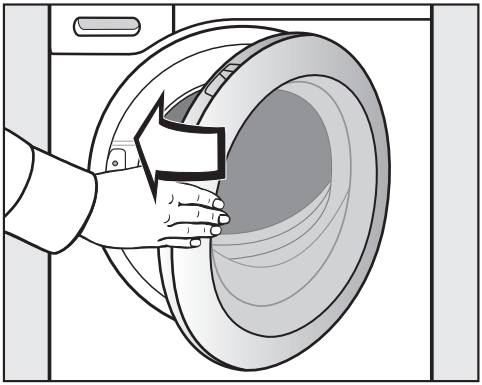

■ Shut the door with a gentle swing.

Switching on the washing machine

■ Press the ⏻ sensor.

The welcome screen will light up.

The display will guide you through the **6 steps** of the initial commissioning process.

1. Setting the language

You will be asked to select the language you require for the display. It is possible to change the language at any time via the Settings menu.

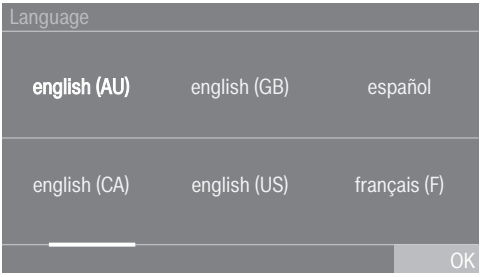

■ Scroll to the left or the right until the language you want appears.

■ Touch the sensor for the language you want.

The selected language will be highlighted in orange and the display will change to the menu for setting up Miele@home.

Networking

Your washing machine is equipped with an integrated Wi-Fi module. The Wi-Fi module makes it possible to connect to your home network and to use the Miele App on a mobile device.

Once your washing machine has been connected via Wi-Fi, the connection is automatically re-established every time it is switched on.

Make sure that your Wi-Fi network signal is strong enough in the place where you intend to install your washing machine.

Connecting your washing machine to your Wi-Fi network will increase energy consumption, even when the washing machine is switched off.

Smart Extras via the Miele App*

Networking via the Miele App gives you access to numerous Smart Extras, including:

- Accessing status information.
- Using additional helpful functions.
- Keep your washing machine up to date with the latest Miele developments via software updates.

You can find more detailed information about Smart Extras on the Miele website, in the Apple App Store® or in the Google Play Store™.

*This is a separate digital offer from Miele & Cie. KG. The range of functions can vary depending on the model and the country. Acceptance of the General Terms and Conditions and Privacy Policy for Miele digital products and services in the Miele App is required. Miele reserves the right to change or discontinue the digital offers at any time.

Requirements for networking

Note the following requirements for networking:

1. A home network is available at the installation site.
   Have the Wi-Fi password ready.
2. The Miele App is available on a mobile device.
3. You have a user account in the Miele App.

Miele App

You can download the Miele App from the Apple App Store® or the Google Play Store™ free of charge (only functional in selected countries).

Download on the App Store

ANDROID APP ON Google Play

2. Setting up Miele@home

- To set up Miele@home now: touch the Continue sensor.

Useful tip: To postpone setup until later: touch the Skip sensor. The following message will appear in the display:
ℹ It is possible to set up later in “Settings” / “Miele@home”.
Confirm with the OK sensor.

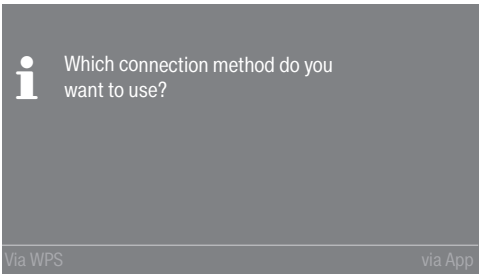

- Select the connection method you wish to use.

You will then be guided by the display and the Miele App.

3. Setting the clock format

The time of day display can be in 12 h or 24 h clock format.

- Select the clock format you want and confirm this with the OK sensor.

The display will bring up the screen for setting the time of day.

Setting the time of day

This message only appears if the washing machine has not yet been connected to a Wi-Fi network.

The time of day is set automatically if connection is established with a Wi-Fi network.

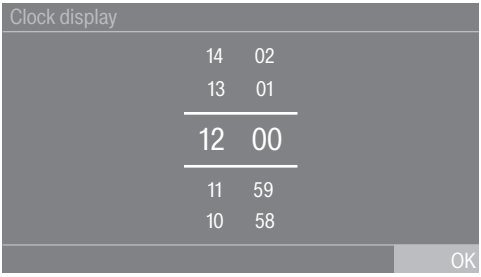

- Place your finger on the number that you want to change and move your finger in the desired direction.
- Confirm with the OK sensor.

4. Removing the transit bars

⚠ Damage resulting from failure to remove the transit bars.
Failure to remove the transit bars can result in damage to the washing machine and to adjacent cabinetry or appliances.
Remove the transit bars as described in "Installation" in the operating instructions.

- Touch the OK sensor to confirm that the transit bars have been removed.

The following message appears in the display:

ℹ Remove transit bars and observe "Warning and Safety instructions" and "Before using for the first time" in the operating instructions.

- Confirm the message with the OK sensor.

The display will change to the screen for setting up TwinDos.

5. Commissioning TwinDos

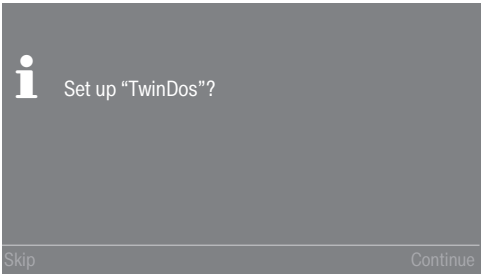

- Touch the Continue sensor to set up TwinDos straight away.

Useful tip: To postpone setup until later: touch the Skip sensor. The following message will appear in the display:
ℹ It is possible to set up later in "Settings" / "TwinDos".
Confirm with the OK sensor.

Settings for compartment ①

The procedure below describes the procedure for Miele UltraPhase 1 and Miele UltraPhase 2. The procedure for other detergents is similar.

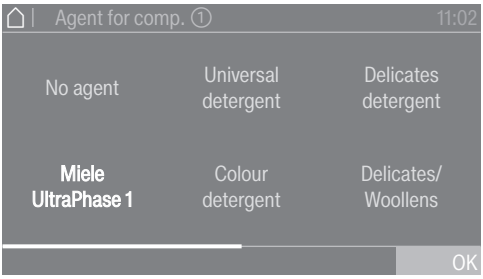

- Touch the Miele UltraPhase 1 sensor.

The following message will appear in the display:
ℹ Please enter the dosing recommendation of your detergent for a wash with normal soiling. Take note of your water hardness level.

The dispensing quantity for UltraPhase 1 for **(hardness range I)** is preset.

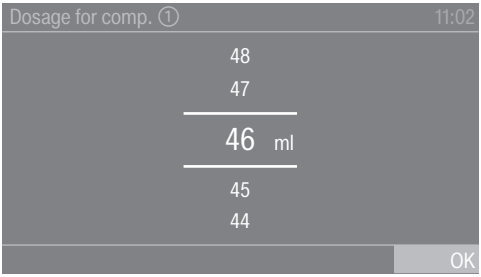

■ Confirm the preset value with the *OK* sensor, or change the value.

UltraPhase 1		
	Hardness level I	46 ml
	Hardness level II	58 ml
	Hardness level III	70 ml

The following appears in the display:
ℹ Insert container ①

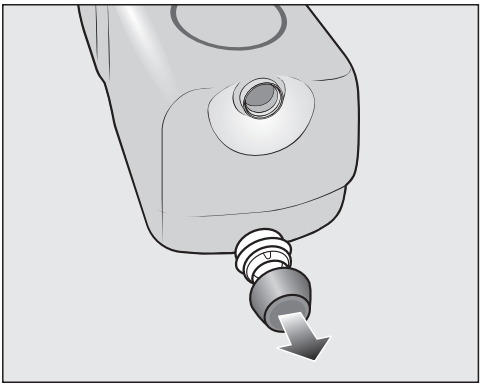

■ Remove the cover cap from the **UltraPhase 1** detergent cartridge included with the delivery.

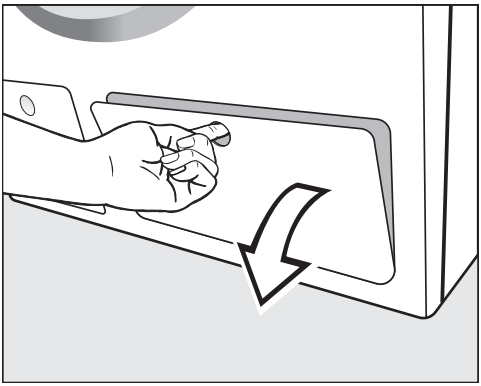

■ Open the access panel for TwinDos.

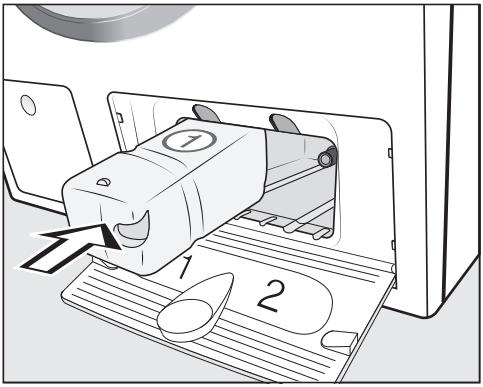

■ Push the **UltraPhase 1** detergent cartridge into **compartment 1** until it locks into position.

The following message will appear in the display:
ℹ Now enter the settings for UltraPhase 2.

Settings for compartment ②

The dispensing quantity for UltraPhase 2 for **(hardness range I)** is preset.

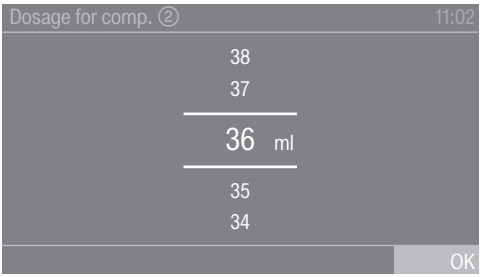

- Confirm the preset value with the *OK* sensor, or change the value.

UltraPhase 2		
	Hardness level I	36 ml
	Hardness level II	45 ml
	Hardness level III	54 ml

The following appears in the display:
ℹ Insert container ②

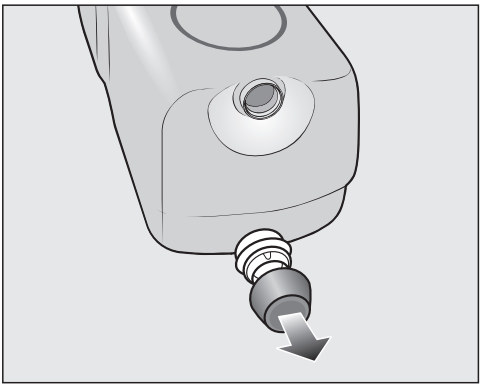

- Remove the cover cap from the **UltraPhase 2** detergent cartridge included with the delivery.

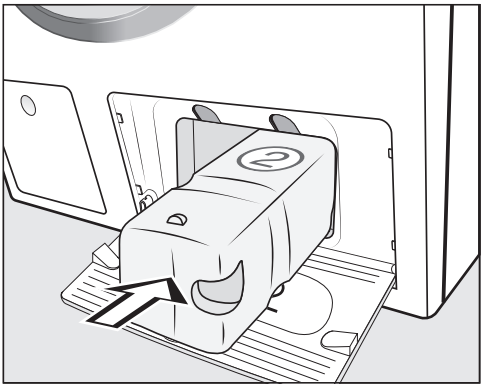

- Push the **UltraPhase 2** detergent cartridge into **compartment 2** until it locks into position.

When the cartridge is pushed in, the message in the display changes to:
ℹ "TwinDos" is set up. Changes can be made in "Settings" / "TwinDos".

- Confirm with the OK sensor.
- Close the TwinDos access panel.

The display will then change to the calibration programme.

6. Starting the calibration programme

For optimum water and energy consumption and excellent wash results, it is important to calibrate the washing machine.

To do this, the Cottons programme **must** be run without laundry and without detergent.

No other programmes can be started until calibration has been carried out.

The following message appears in the display: ℹ Turn on the tap and run the "Cottons 90°C" programme without any laundry

■ Confirm with the OK sensor.

The display will switch to the standard display for the Cottons programme.

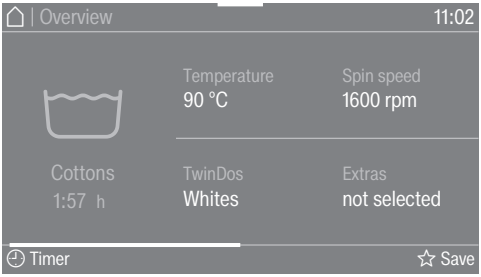

■ Touch the *Start/Stop* sensor.

The washing machine has an automatic safety lock. The washing machine can only be started within 60 seconds of the last operational step on the control panel. If the 60 seconds are exceeded, the *Start/Stop* sensor goes dark The following appears in the display: Touch "OK" to release the automatic child safety lock. Confirm with OK. You then have another 60 seconds in which to start the wash programme.

The calibration programme is started. It will take approximately 2 hours.

At the end of the programme the following message will appear in the display: ℹ Set-up completed

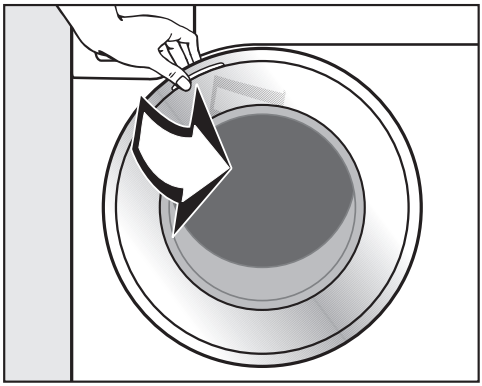

■ Take hold of the door and pull it open.

Useful tip: For safety reasons, close the door when the washing machine is not in use. Otherwise there is a danger of objects being placed inadvertently in the drum. If these remain unnoticed and were washed in the next load, they could damage the laundry. An open door is also a danger to pets and children.

■ Switch the washing machine off with the ⏻ sensor.

Energy and water consumption

- To get the most out of your machine, load the maximum dry load size for the wash programme you are using. This will keep the energy and water consumption to a minimum in relation to the size of the load.
- Programmes that are more efficient with regard to energy and water consumption generally have a longer running time. By extending the programme running time, the wash temperature that is actually reached can be reduced while still providing the same wash results.

  For example, the Cottons 40°C programme has a longer running time than the Cottons 40°C or 60°C programme, but the Cottons 40°C programme is more efficient in terms of energy and water consumption.
- Use the Express 20 programme for small, lightly soiled loads.
- Modern detergents make it possible to wash at lower temperatures (e.g. 20°C). Using lower temperature settings will save energy.
- If energy-saving water heating sources, such as a solar water heating system, are used, we recommend using the hot water connection.

Hygiene in the washing machine

Washing at low temperatures and/or using liquid detergents can cause bacteria and odours to build up in the washing machine. Miele therefore recommends cleaning the washing machine once every month.

When the message Hygiene info: Select "Maintenance" and start the "Clean machine" programme. appears in the display, the washing machine must be cleaned.

Information about subsequent tumble drying

The spin speed selected affects the residual moisture in the laundry and the sound emissions of the washing machine.

The higher the spin speed, the lower the residual moisture in the laundry. However, the sound emissions of the washing machine will increase.

Select the highest possible spin speed for the wash programme to save energy in the subsequent tumble dryer cycle.

Feedback

You can view information about the energy and water consumption of your washing machine with the pull-down menu.

The following information will appear in the display:

- An estimate of the energy and water consumption before the programme begins.
- The actual energy and water consumption during the programme or at the end of the programme.

■ Open the pull-down menu.

1. Estimate

The estimated energy and water consumption levels will be displayed as a bar chart on the right-hand side.

The more bars visible, the higher the energy or water consumption.

The estimate will vary depending on the wash programme, temperature and any Extras selected.

2. Actual consumption

You can view the actual amount of energy and water used by a programme both during and at the end of the programme.

The costs can also be displayed. See “Settings - Consumption” for more detailed information on costs.

The consumption will alter as the programme progresses.

If the door is opened or the appliance has switched off automatically at the end of the programme, the data will revert to the estimated consumption.

Useful tip: You can view the consumption data for the last wash programme and for total consumption (see “Settings - Consumption”).

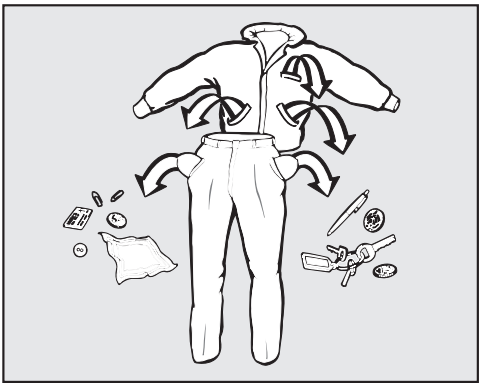

■ Empty all pockets.

⚠ Damage due to foreign objects.
Nails, coins, paper clips, and so on can cause damage to garments and components in the machine.
Check the laundry before washing and remove any foreign objects.

Sorting the laundry

■ Sort the laundry by colour and by care label. Most garments have a textile care label in the collar or side seam.

Useful tip: Dark textiles often contain excess dye and should be washed separately several times before being included in a mixed load. Always wash white and coloured items separately.

Pre-treating stains

■ Badly soiled areas and stains should be cleaned as soon as possible, preferably whilst still fresh. Spillages should be carefully dabbed off using a soft, colourfast cloth. Do not rub.

Useful tip: Please refer to the Miele website or Miele@mobile App for more information on stain removal.

⚠ Damage due to solvent-based cleaning agents.
Cleaning agents containing benzine, stain remover, etc., can damage plastic parts.
When pre-treating garments, make sure that any plastic parts (e.g. buttons) do not come into contact with cleaning agent.

⚠ Risk of explosion due to solvent-based cleaning agents.
If solvent-based cleaning agents are used, an explosive mixture can form.
Never use solvent-based cleaning agents in the washing machine.

General tips

- Curtains: remove lead weights first or place in a laundry bag.
- Remove or sew in any loose underwiring in bras or shirt collar stiffeners.
- Close any zips, attach velcro fasteners, fasten hooks and eyes etc. before washing.
- Fasten duvet covers and pillow cases to prevent small items from being rolled up inside them.

Do not wash items which are specified by the manufacturer as **not washable** on the care label (symbol).

2. Selecting a programme

Switching on the washing machine

■ Press the ⏻ sensor.

The interior drum lighting will come on.

The drum lighting will go out automatically after five minutes.

Useful tip: To switch the lighting on again, open the pull-down menu from the overview menu and then touch the ☼ sensor.

The main menu will then appear in the display.

Selecting a programme

■ Touch the Programmes sensor.

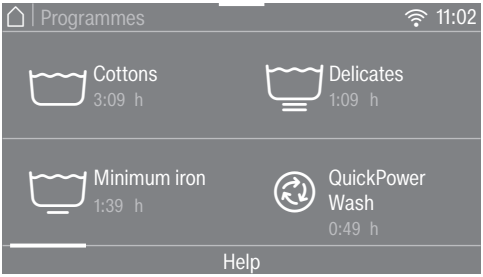

■ Scroll to the right of the display until the programme you want appears.

■ Touch the sensor for that programme.

The display will change to show the Overview menu.

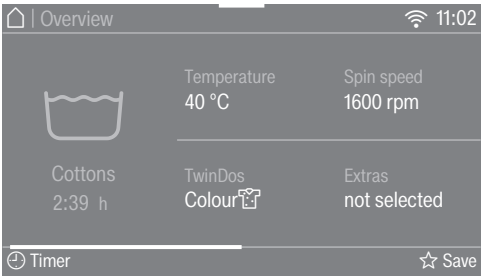

There are 3 further ways of selecting a programme. 1. Favourites 2. Washing assistant 3. MobileStart

Selecting the temperature

You can alter the preset temperature of a wash programme.

The temperatures reached in the washing machine may differ from the selected temperatures. The combination of energy input and washing time achieves an optimum washing result.

- Touch the Temperature sensor.
- Select the desired temperature.

The display will change to show the Overview menu.

Selecting a spin speed

You can alter the preset spin speed of a wash programme.

- Touch the Spin speed sensor.
- Select the spin speed you want.

The display will change to show the Overview menu.

Activating TwinDos

TwinDos dispensing is automatically activated for all programmes in which dispensing is possible.

1. Switch TwinDos on or off

- Touch the TwinDos sensor and select Off or On.

2. Select the detergent

When using Miele's 2-phase system you must set the colour of the laundry.

- Select Whites for loads of white items, or Colours for loads containing coloured items.

If you are using a different type of detergent, this must be selected.

- Select compartment ① or ②.

Useful tip: Only those detergents that can be used with the programme are displayed.

3. Select the degree of soiling

The display will ask you to enter the degree of soiling of the laundry.

- Select Light, Normal or Heavy.
- Confirm your selection with the OK sensor.

Automatic dispensing is now switched on.

The display will change to show the Overview menu.

See “5. Adding detergent - TwinDos” for more information.

Selecting Extras

You can supplement the wash programmes with Extras.

- Touch the Extras sensor.
- Select one or more Extras.

Not all Extras can be combined with every programme, e.g. AllergoWash, Extra gentle and Extra quiet. Extras that cannot be combined are greyed out and cannot be selected.

- Confirm with the *OK* sensor.

The display will change to show the Overview menu.

See “Extras” for further information.

Activating CapDosing

If you can use CapDosing with a wash programme:

- Touch the CapDosing sensor.

The types of capsules which can be used with the programme will appear in the display.

- Select the type of capsule you want.

CapDosing is now active.

The display will change to show the Overview menu.

See “5. Adding detergent - CapDosing” for more information.

Selecting stains

In order to clean stained laundry more effectively, you can choose from a list of various types of stains. The wash programme will then adapt to the type of stain selected.

- Touch the Stains sensor.
- Select the type of stains in your load from the list.
- Confirm your selection with the OK sensor.

With some stains, helpful information will also appear in the display when they are selected.

- Confirm the information with the OK sensor.

The display will change to show the Overview menu.

Timer

You can use the Timer to set the finish time or the start time for a wash programme.

See “Timer” for further information.

Opening the door

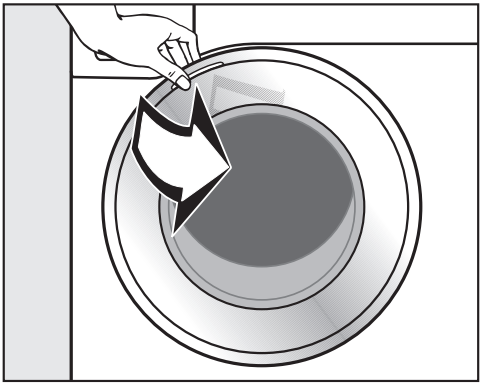

- Take hold of the door and pull it open.

Check the drum for pets or foreign objects before loading it with laundry.

The most efficient use of energy and water is achieved when a full load is washed. However, do not overload as this reduces cleaning efficiency and causes creasing.

- Unfold the laundry and load loosely in the drum.

Mixing both large and small items gives better wash results and also helps distribute the load evenly during spinning.

Useful tip: The maximum load for the programme selected will appear in the pull-down menu.

Closing the door

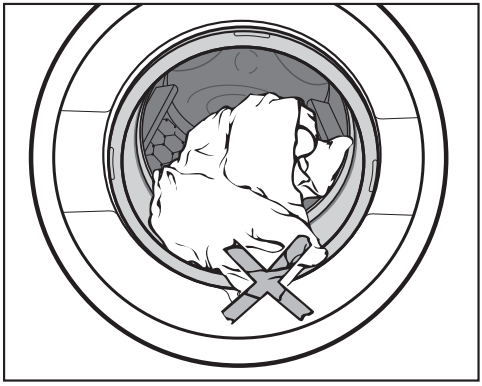

- Make sure that no items are caught between the door and the seal.

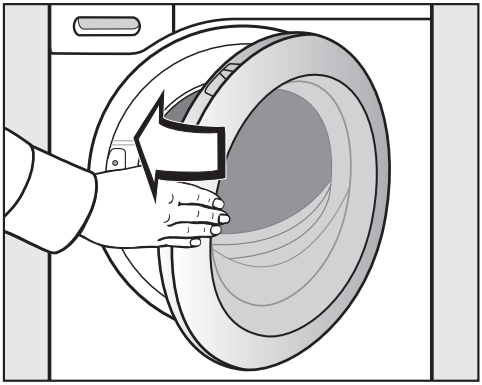

- Shut the door with a gentle swing.

5. Adding detergent

There are several options for adding detergent.

TwinDos

TwinDos

The washing machine is equipped with the TwinDos system.

TwinDos has to be activated as described in “Before using for the first time”.

How UltraPhase 1 and UltraPhase 2 work

UltraPhase 1 is a liquid detergent which dissolves dirt and removes the most common stains. UltraPhase 2 is a bleaching agent and removes stubborn stains. For the best washing result, these two agents are dispensed at separate times during the wash process. UltraPhase 1 and UltraPhase 2 clean white and coloured fabrics thoroughly. UltraPhase 1 and UltraPhase 2 single use cartridges are available to order from Miele or via the internet at shop.miele.com (see the end of this booklet for details).

Activating TwinDos dispensing

TwinDos dispensing is automatically activated for all programmes in which dispensing is possible.

Useful tip: The detergent dispensing quantities are preset. If too much foam builds up, the dispensing quantity can be reduced via the ⚙ Settings / Programme sequence / TwinDos menu.

Changing TwinDos dispensing

You can change the suggested colour composition of the laundry.

- Touch the TwinDos sensor and select the colour composition of your laundry.

Deactivating TwinDos dispensing

- Touch the TwinDos sensor.
- Touch the Off sensor.

Using other methods to remove stains

If you wish to use additional methods of stain removal, you have the following options:

- Using the Booster cap and activating CapDosing.
- Add stain remover to the ⊔ compartment.

Degree of soiling

The level of soiling in laundry is divided into three settings:

- Light
  No visible soiling or stains
- Normal
  Visibly soiled and/or just a few slight stains
- Heavy
  Heavily soiled and/or stains clearly visible.

The dispensing amount for TwinDos and the amount of water required for rinsing is preset for the Normal level of soiling.

- Touch the TwinDos sensor to select a different level of soiling.

The amount of detergent and water will be adjusted to suit the selected level of soiling.

Some programmes will not let you set the level of soiling. These programmes are designed for lightly soiled laundry only.

Detergent dispenser drawer

Any detergent suitable for automatic front loading washing machines can be used with this appliance. Please observe the instructions for use and dosage on the detergent packaging.

Ensure that TwinDos dispensing is deactivated.

Filling with detergent

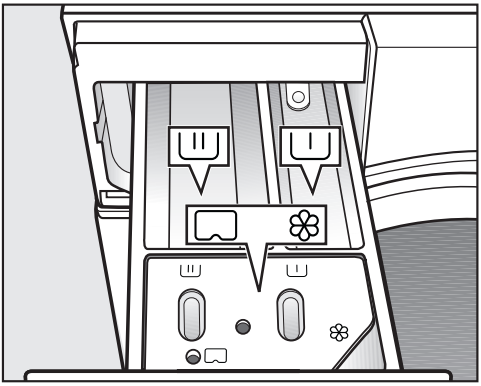

- Pull out the detergent drawer and add detergents to the compartments.

Compartments in the detergent dispenser drawer

I Detergent for the pre-wash

II Detergent for the main wash and soaking

❀ Fabric softener, liquid starch, or capsules

Adding fabric softener

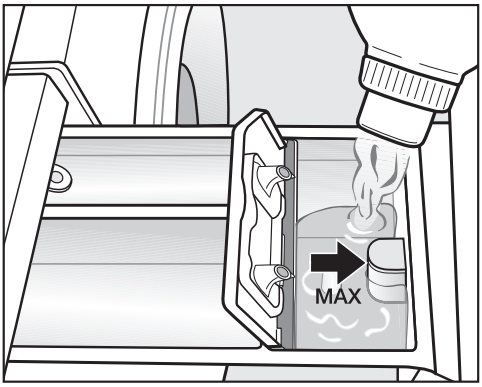

- Add fabric softener or liquid starch to the ❀ compartment. **Do not exceed the maximum level mark.**

It will be automatically dispensed in the final rinse. At the end of the programme a small amount of water remains in the fabric softener ❀ compartment.

Starch can make the siphon tube sticky.
If starching frequently, thoroughly clean the dispenser compartment, especially the siphon tube, regularly.

Tips on dosing

Adjust the detergent dosage to the level of soiling of the laundry and the size of the load. Reduce the amount of detergent with smaller loads (e.g. reduce the amount of detergent by ⅓ when washing a half load).

Too little detergent results in:

- laundry not getting properly clean and with time it may become grey and hard to the touch.
- a build-up of mould in the washing machine.
- grease not being completely removed from the laundry.
- limescale deposits on the heater elements.

Too much detergent results in:

- poor wash, rinse, and spin results.
- a higher water consumption as an extra rinse cycle is automatically activated.
- a greater burden on the environment.

Using liquid detergent with a pre-wash

Liquid detergent cannot be used for the main wash if the pre-wash has been selected.

Use TwinDos dispensing if you are activating the pre-wash.

Using detergent tablets or pods

Always put detergent tablets or pods directly in the drum with the laundry. They cannot be added via the detergent dispenser drawer.

See “Detergent” for further information on detergents and dosage.

CapDosing

If you selected CapDosing when setting the programme, detergent will be dispensed via the capsule for this wash programme.

Only one capsule can be selected per wash programme.

Three different types of capsule are available:

❀ = Fabric care (e.g. fabric softener)

= Additives (e.g. detergent enhancers)

= Detergent (for the main wash only)

Depending on the setting selected, the detergent, additive or fabric care agent will be dispensed via the capsule.

Each capsule contains the correct amount for one wash cycle.

Capsules are available to order from Miele or from the Miele online shop (see the end of this booklet for contact details).

⚠ Capsules pose a health risk.
The ingredients of capsules can be hazardous to health if they are swallowed or come into contact with skin.
Keep capsules out of the reach of children.

Inserting a capsule

■ Open the detergent dispenser drawer.

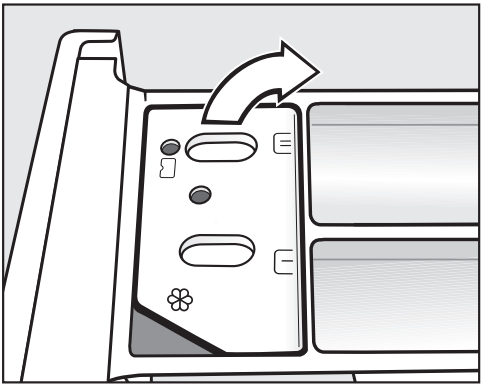

■ Open the lid of the ❀/▭ compartment.

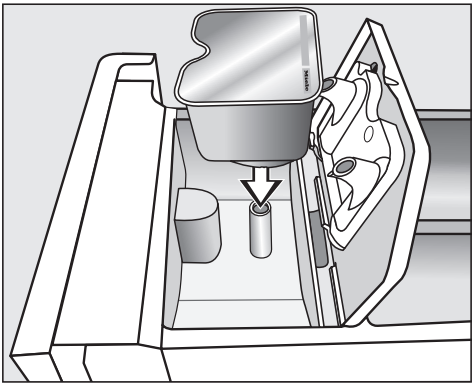

■ Press the capsule in firmly.

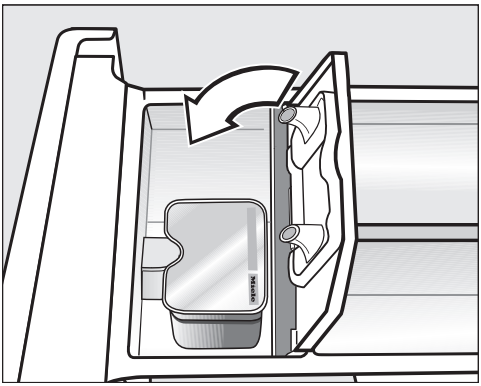

■ Close the lid and press it firmly shut.

■ Close the detergent dispenser drawer.

Useful tip: TwinDos dispensing is switched off automatically when a capsule is selected for the main wash 💧. The indicator for TwinDos dispensing remains visible in the display.

> The capsule is opened by the act of inserting it in the detergent dispenser drawer. The contents can run out of the capsule if you then remove it from the drawer before it is used.
> In this case, dispose of the capsule and do not re-use it.

The wash programme will dispense the contents of the capsule at the correct time.

> Water intake to the ❀ compartment is solely via the capsule.
> No additional fabric softener may be added to the ❀ compartment when using a capsule.

■ Remove the empty capsule at the end of the programme.

> For technical reasons a small amount of water will remain in the capsule.

Starting a programme

Automatic safety lock

The washing machine has an automatic safety lock. The washing machine can only be started within 60 seconds of the last operational step on the control panel. If the 60 seconds are exceeded, the *Start/Stop* sensor goes dark The following appears in the display : Touch "OK" to release the automatic child safety lock. Confirm with OK. You then have another 60 seconds in which to start the wash programme.

- Touch the *Start/Stop* sensor.

The door will lock and the programme will start.

The programme status will appear in the display.

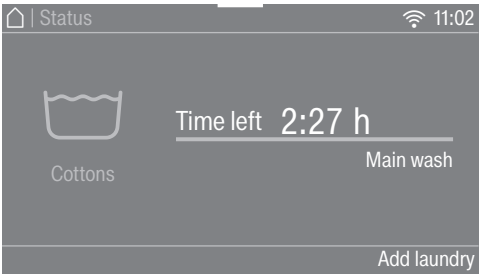

The washing machine will keep you updated on the programme status and the time remaining for the programme to run.

If a Delay start time has been selected, this will count down in the display until the programme starts.

The drum lighting switches off once the programme has started.

Energy savings

After 10 minutes the indicators will dim. The *Start/Stop* sensor flashes slowly.

You can reactivate the indicators:

- To do this, touch the *Start/Stop* sensor (this does not have any effect on a running programme).

Adding or removing laundry during a programme sequence (AddLoad)

Laundry can be added or removed until shortly before the end of the programme.

- Touch the *Add laundry* sensor.

The following appears in the display:
Please wait

The programme will stop and the door will unlock.

The following appears in the display:

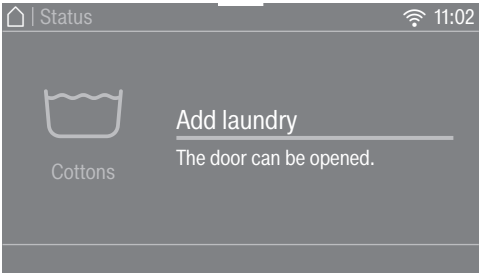

- Open the door and add or remove laundry.
- Close the door.
- Touch the *Start/Stop* sensor.

The wash programme will continue.

Laundry cannot usually be added or removed if:

- The suds temperature is above 55°C
- The water inside the drum is above a certain level

At the end of the programme

The door remains locked during the Anti-crease phase and Finish/Anti-crease and Unlock with "Start/Stop" appear in the display.

- Touch the *Start/Stop* sensor. The door will be unlocked.

The interior drum lighting will come on.

Useful tip: The door unlocks automatically at the end of the Anti-crease phase.

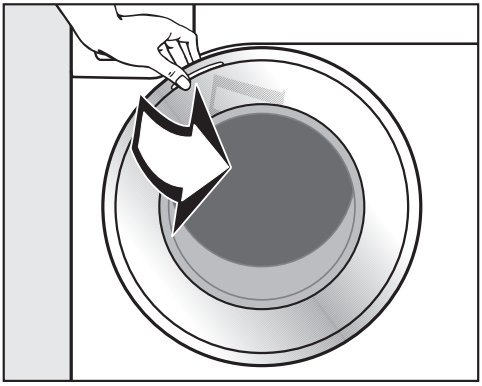

- Take hold of the door and pull it open.
- Remove the laundry.

Items left in the drum could discolour other items in the next wash or become discoloured themselves.
Check that all items have been removed from the drum.

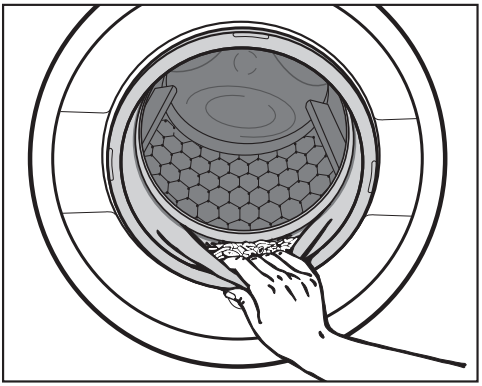

- Check the folds in the door seal for any small articles, e.g. buttons, which might be lodged there.

Useful tip: For safety reasons, close the door when the washing machine is not in use. Otherwise there is a danger of objects being placed inadvertently in the drum. If these remain unnoticed and were washed in the next load, they could damage the laundry. An open door is also a danger to pets and children.

- Switch the washing machine off with the ⏻ sensor.
- If applicable, remove the used capsule from the detergent dispenser drawer.

Useful tip: Leave the detergent dispenser drawer slightly open to allow it to dry.

Final spin speed in the programme

When a programme is selected, the optimum spin speed for this wash programme will appear in the display.

A faster spin speed can be selected for certain wash programmes.

The highest selectable spin speed is indicated in the table.

Programme	rpm
Cottons	1600
Minimum iron	1200
Delicates	900
QuickPowerWash	1600
Automatic plus	1400
Woollens	1200
Silks	600
Express 20	1200
Shirts	900
Denim	900
Dark garments	1200
Sportswear	1200
Trainers	600
Outerwear	800
Proofing	1000
Down filled items	1200
Down duvets	1200
Pillows	1200
Cottons hygiene	1600
Curtains	600
First wash	1200
Separate rinse	1600
Starch	1200
Drain/Spin	1600
Cottons	1600
Clean machine	600

Omitting the final spin (Rinse hold)

- Select the Rinse hold Extra.

If Rinse hold is selected, the laundry remains in the water following the final rinse cycle. This helps prevent creasing if the laundry is not going to be removed from the drum immediately after the end of the programme.

Ending a programme with a spin cycle

The wash programme is set to the optimum spin speed. You can change the spin speed.

- Touch the Change spin speed sensor.
- Select the desired spin speed.
- Start the final spin with the *Start/Stop* sensor.

Ending a programme without a spin cycle

- Touch the Change spin speed sensor.
- Select Spin speed 0 rpm (no spin).
- Touch the *Start/Stop* sensor.

Rinse and interim spin

There is a spin cycle after the main wash and between the rinses. A reduction in the final spin speed will also reduce the interim spin speed.

Omitting interim spin and the final spin

- Touch the Spin speed sensor.
- Select the 0 rpm setting.

After the last rinse, the water will be pumped away and the Anti-crease phase will switch in.

In some programmes an additional rinse is introduced with this setting.

Cottons	**Cold to 90°C**	**Max. load 9.0 kg**
Items	Cottons, linens or cotton mix fabrics, e.g. table linen, towelling, underwear, T-shirts etc.	
Notes	Where particularly high levels of hygiene are required, please select a temperature of 60°C or higher.	
Minimum iron	**Cold to 60°C**	**Max. load 4.0 kg**
Items	Synthetic, mixed fibre and easy care cotton.	
Notes	Reduce the spin speed for fabric that creases easily.	
Delicates	**Cold to 60°C**	**Max. load 3.0 kg**
Items	Delicate garments made from synthetic fibre, mixed fibre, rayon and viscose.	
Notes	For items which crease easily, deselect the spin.	
QuickPowerWash	**40°C – 60°C**	**Max. load 4.0 kg**
Items	Moderately soiled garments which are also suitable for washing in the *Cottons* programme.	
Notes	A special saturation process and wash rhythm ensure that the laundry is cleaned particularly quickly and thoroughly.	
Automatic plus	**Cold to 40°C**	**Max. load 6.0 kg**
Items	Mixed loads of garments sorted according to colour which are suitable for the *Cottons* and *Minimum iron* programmes.	
Notes	The wash parameters (e.g. water level, wash rhythm and spin speed) are adjusted automatically in this programme to ensure the best possible care and wash result for each item.	
Woollens	**Cold to 40°C**	**Max. load 2.0 kg**
Items	Machine-washable or hand-washable wool or wool blend fabric. If the care label does not specify a temperature, wash using the cold setting.	
Notes	Reduce the spin speed for fabrics that crease easily.	
Silks	**Cold to 30°C**	**Max. load 1.0 kg**
Items	Silks and other hand-washable fabrics with no wool content, e.g. satin, lace and silk.	
Notes	Place stockings and bras etc. in a laundry bag.	

Programme chart

Express 20	**Cold to 40°C**	**Max. load 3.5 kg**
Items	Cotton garments that have hardly been worn or are only very lightly soiled.	
Notes	The *Quick* Extra is activated automatically.	
Shirts	**Cold to 60°C**	**Max. load 1.0 kg/2.0 kg**
Items	Shirts and blouses made of cotton and mixed fibre.	
Notes	- Pre-treat collars and cuffs if necessary. - Wash silk shirts and blouses in the *Silks* programme. - If the preset *Pre-ironing* Extra is switched off, the maximum load capacity is increased to 2.0 kg.	
Denim	**Cold to 60°C**	**Max. load 3.0 kg**
Notes	- Wash denim inside-out. - Dark textiles often contain excess dye and should be washed separately several times before being included in a mixed load. Wash light and coloured items separately. - Close any zips, do up buttons etc. before washing.	
Dark garments	**Cold to 60°C**	**Max. load 3.0 kg**
Items	Black and dark items made of cotton or mixed fibres	
Notes	Wash inside out.	
Sportswear	**Cold to 60°C**	**Max. load 3.0 kg**
Items	Sportswear such as jersey shirts and leggings, and microfibre and fleece garments.	
Notes	- Do not use fabric softener. - Observe the instructions on the care label.	
Trainers	**Cold to 40°C**	**Max. 2 pairs of shoes**
Items	Sport shoes only (not leather shoes)	
Notes	- Observe the instructions on the care label. - Brush coarse soiling off before washing. - Close Velcro fasteners. - Do not use fabric softener. - Use the drying basket for tumble drying.	

Outerwear	**Cold to 40°C**	**Max. load 2.5 kg**
Items	Performance outerwear (e.g. jackets and trousers) made from membrane fabric such as Gore-Tex®, SYMPATEX®, WINDSTOPPER®, etc.	
Notes	- Close any zips and Velcro fasteners before washing. - Do not use fabric softener. - If required, these items can also be reproofed using the *Proofing* programme. Reproofing after each wash cycle is not recommended.	
Proofing	**40°C**	**Max. load 2.5 kg**
Items	Treating microfibre fabric, ski wear or table linen made from mainly synthetic fibres to provide a finish that is resistant to water and dirt.	
Notes	- The items should be freshly laundered and spun or dried before proofing. - For best results, the items should be heat-treated afterwards. This can be achieved by drying them in the tumble dryer or by ironing them.	
Down filled items	**Cold to 60°C**	**Max. load 2.0 kg**
Items	Jackets, sleeping bags, pillows and other down-filled items.	
Notes	- Remove air from the items before washing to prevent an excessive build-up of foam. To do this, either push the items into a narrow laundry bag to compress them or tie the items together with a washable strap. - Observe the instructions on the care label.	
Down duvets	**Cold to 60°C**	**Max. load 2.5 kg** **1 down duvet** **2.20 m x 2.00 m**
Items	Quilts, duvets and pillows with feather or down filling.	
Notes	- Remove air from the items before washing to prevent an excessive build-up of foam. To do this, either push the items into a narrow laundry bag to compress them or tie the items together with a washable strap. - Observe the instructions on the care label.	

Programme chart

Pillows	**Cold to 60°C**	**2 pillows (40 x 80 cm) or 1 pillow (80 x 80 cm)**
Items	Washable pillows with synthetic filling.	
Notes	- Remove air from the items before washing to prevent an excessive build-up of foam. To do this, either push the items into a narrow laundry bag to compress them or tie the items together with a washable strap. - Observe the instructions on the care label.	
Cottons hygiene	**60°C to 90°C**	**Max. load 9.0 kg**
Items	Cotton or linen with direct skin contact or for which special hygiene requirements apply, e.g. underwear, bed linen, encasing products.	
Notes	- Safe removal of viruses and bacteria in combination with the *AllergoWash* Extra and detergent dispensing via TwinDos with UltraPhase 1 and 2. Tested and confirmed by Albstadt-Sigmaringen University. - Temperature holding times are longer than in the *Cottons* programme. - Observe the instructions on the care label.	
Curtains	**Cold to 40°C**	**Max. load 2.0 kg**
Items	Curtains, including net curtains, specified as machine-washable by the manufacturer.	
Notes	- To remove dust, the *Pre-wash* Extra is selected automatically. - For curtains which crease easily, reduce the spin speed or deselect the spin. - Remove weights from curtains.	
First wash	**Cold to 40°C**	**Max. load 2.0 kg**
Items	New items made of cotton, towelling and polyester fabric.	
Notes	Use this programme to wash any manufacturing residues out of new items.	
Separate rinse		**Max. load 8.0 kg**
Items	For rinsing hand-washed items	
Notes	Reduce the spin speed for items which crease easily.	

Starch	**Max. load 8.0 kg**
Items	For starching table cloths, serviettes and workwear
Notes	- Reduce the spin speed for items which crease easily. - Laundry that is to be starched should be washed but not treated with fabric softener.
Drain/Spin	**–**
Notes	- Drain: Set the spin speed to 0 rpm. - Make sure you select the appropriate spin speed.
Cottons 60°C	**Max. load 9.0 kg**
Items	Cottons, linens or cotton mix fabrics, e.g. table linen, towelling, underwear, T-shirts etc.
Notes	With 60°C the actual wash temperature reached will be lower than 60°C although the wash performance is the same as with the standard Cottons 60°C programme.
Cottons 40°C	**Max. load 9.0 kg**
Items	Normally soiled cotton garments.
Notes	These settings are the most efficient in terms of energy and water consumption for washing cottons.

Note for test institutes:

Energy labelling programme according to AS/NZS 2040.1 & AS/NZS 2040.2 (refer to www.energyrating.gov.au website for consumption data).

The TwinDos system must be switched off during the tests. The detergent must be added via the detergent dispenser drawer.

Maintenance

The washing machine has two maintenance programmes.

1. Clean machine for cleaning the washing machine.
2. Clean "TwinDos" for maintenance of the TwinDos compartments ①/②. See "Cleaning and care – TwinDos maintenance" for more details.

Clean machine	**85°C**	**No load**
With frequent washing at low temperatures there is a danger of a build-up of bacteria in the washing machine. Cleaning the washing machine will significantly reduce bacteria, mould, and biofilm, and prevent the build-up of unpleasant odours.		
Notes	- Optimum results can be achieved by using Miele's IntenseClean washing machine cleaner. Alternatively, a universal powder detergent can be used. - Dispense the washing machine cleaner or universal detergent directly in the drum. - Do not load any laundry. The drum must be empty for the machine maintenance wash.	

You can use the Extras sensor to augment the wash programmes.

Quick

The programme duration is reduced. Mechanical action and energy usage are increased.

Water plus

The water level in the main wash and the rinse cycles is increased.

You can select by how much the water level is increased (see “Settings - Water plus level”).

Extra rinse

An additional rinse cycle can be carried out to give a better rinse result.

SingleWash

For efficiently washing a very small load (< 1 kg) in a normal wash programme. The wash duration is reduced.

Please note the following advice:

- Use liquid detergent.
- Reduce the dosage to a maximum of 50% of the amount quoted for a ½ load.

Pre-ironing

In order to reduce creasing, the laundry undergoes a smoothing process at the end of the programme. For optimal smoothing reduce the maximum load by 50%. Follow the instructions in the display. Small loads achieve a better result.

The garments must be suitable for drying in a tumble dryer and suitable for ironing .

Pre-wash

For laundry with large amounts of dirt, e.g. dust and sand.

Soak

For heavily soiled fabrics with protein stains.

A duration of between 30 minutes and 6 hours can be selected in 30-minute increments for the soak process. See “Settings” for more information.

The factory default setting is 30 minutes.

Intensive

For hard-wearing laundry that is very heavily soiled. Cleaning efficiency is increased through more intense mechanical action and the application of more heat energy.

AllergoWash

This option should be used where high standards of hygiene are required. More energy is used to lengthen temperature holding times and more water is used to increase rinsing efficiency. The items must be suitable for drying in a tumble dryer and suitable for ironing .

Extra gentle

Drum rotation and wash duration are reduced. Lightly soiled fabrics are washed more gently.

Extra quiet

This option reduces noise levels during the wash programme. Use this if you want to wash during quiet periods (for instance when children are sleeping). The final spin is automatically reduced to (Rinse hold). The programme duration is increased.

Rinse hold

The laundry is not spun after the final rinse and remains in the rinse water. This helps prevent creasing if the laundry is not going to be removed from the drum immediately after the end of the programme.

Not all the Extras can be used with every programme. If an Extra is not permitted for a wash programme, it will not be shown in the display. See “Wash programme chart - Extras”.

Wash programme chart - Extras

	Quick	Water plus	Extra rinse	SingleWash	Pre-ironing	Pre-wash	Soak	Intensive	AllergoWash	Extra gentle	Extra quiet	Rinse hold
Cottons	●	●	●	●	●	●	●	●	●	●	●	●
Minimum iron	●	●	●	●	●	●	●	●	●	●	●	●
Delicates	●	●	●	●	●	●	●	–	●	●	●	●
QuickPowerWash	✓	–	–	●	●	–	–	–	–	–	–	●
Automatic plus	●	●	●	●	●	●	●	–	●	●	●	●
Woollens	–	–	–	●	–	–	–	–	–	–	●	●
Silks	–	–	–	●	–	–	–	–	–	–	●	●
Express 20	✓	–	–	–	●	–	–	–	–	–	–	●
Shirts	●	●	●	●	✓	●	●	–	●	●	●	●
Denim	●	●	●	●	●	●	●	–	●	●	●	●
Dark garments	●	●	●	●	✓	●	●	–	●	●	●	●
Sportswear	●	●	●	●	●	●	●	–	●	●	●	●
Trainers	–	●	–	–	–	–	–	–	–	–	●	●
Outerwear	●	●	●	–	–	●	●	–	–	●	●	●
Proofing	–	–	–	–	–	–	–	–	–	–	–	●
Down filled items	●	●	●	–	–	●	–	–	●	●	●	●
Down duvets	●	●	●	–	–	●	–	–	●	●	●	●
Pillows	●	●	●	–	–	●	–	–	●	●	●	●
Cottons hygiene	●	●	●	–	●	●	●	–	●	●	●	●
Curtains	●	●	●	–	●	✓	–	–	●	●	●	●
First wash	–	●	●	●	●	–	–	–	–	●	●	●
Separate rinse	–	●	–	–	–	–	–	–	–	–	–	●
Starch	–	●	–	–	–	–	–	–	–	–	–	●
Cottons	●	●	●	●	●	●	●	●	●	●	●	●

● = can be selected

– = cannot be selected

Programme sequence

	Main wash		Rinse		Spin
	Water level	Wash rhythm	Water level	Rinses	
Cottons		A		2-5[1,2,3]	✓
Minimum iron		B		2-4[2,3]	✓
Delicates		C		2-4[2,3]	✓
QuickPowerWash		A		2	✓
Automatic plus		A B		2-4[2,3]	✓
Woollens		E		2	✓
Silks		E		2	✓
Express 20		A		1	✓
Shirts		C		3-4[3]	✓
Denim		B		2-4[2,3]	✓
Dark garments		B		3-5[2,3]	✓
Sportswear		C		2-3[3]	✓
Trainers		D		2	✓
Outerwear		C		3-4[3]	✓
Proofing	–	B		1	✓
Down filled items [4]		C		3-4[3]	✓
Down duvets		C		3-4[3]	✓
Pillows [4]		C		3-4[3]	✓
Cottons hygiene		A		2-5[1,2,3]	✓
Curtains		C		3-4[3]	✓
First wash		B		2-3[3]	✓
Separate rinse	–	–		2	✓
Starch		B	–	–	✓
Cottons		A		2-5[2,3]	✓

= low water level

= medium water level

= high water level

Ⓐ = intensive rhythm

Ⓑ = normal rhythm

Ⓒ = sensitive rhythm

Ⓓ = ultra sensitive rhythm

Ⓔ = handwash rhythm

✓ = carried out

– = not carried out

This washing machine has fully electronic controls with automatic load control. The washing machine takes in the right amount of water required for the programme depending on the amount of laundry and its absorbency rate.

The programme sequences outlined in the chart are based on the basic programme with a full load.

The washing machine programme sequence display shows which stage of the programme has been reached.

Special features in the programme sequence

Anti-crease:
At the end of the programme the drum continues to turn at intervals for up to 30 minutes to help prevent creasing.
Exception: There is no anti-crease phase in the *Woollens* and *Silks* programmes.
The door can be opened at any time during the anti-crease phase.

[1] If a temperature of 60°C or higher is selected, two rinses are carried out. If a temperature of less than 60°C is selected, three rinses are carried out.

[2] An additional rinse is carried out if:

- there is too much foam in the drum.
- a spin speed lower than 700 rpm has been selected.

[3)] An additional rinse is carried out if:

- The Extra rinse Extra has been selected.

[4)] Run-up to spin: A run-up to spin is carried out before the wash process begins to deflate down-filled items. Subsequent water intake for the main wash is through compartment II.

PowerWash

PowerWash is a washing technique developed by Miele. It is activated in the following programmes:

- Cottons (with small and medium-sized loads)
- ECO 40-60 (with small and medium-sized loads)
- Minimum iron
- Shirts
- Automatic plus
- Delicates
- Cottons (with small and medium-sized loads)

How it works

Conventional washing techniques wash with more water than the laundry can absorb. This total volume of water needs to be heated.

The PowerWash washing technique only uses slightly more water than the laundry can absorb. The water which has not been absorbed by the laundry heats up the drum and the laundry and is sprayed into the laundry over and over again. This reduces the amount of energy used.

Activation

PowerWash is activated **automatically** in the programmes listed above.

PowerWash is deactivated if:

- The selected final spin speed is less than 600 rpm
- CapDosing (,) has been selected for the main wash
- The wash temperature is higher than 60°C
- Extras such as *Pre-wash* or *Water plus* have been selected
- A large load is being washed in the *Cottons* programme

Special features

- **Drenching phase**
  The washing machine will spin a few times at the beginning of the programme. During spinning, the water discharged is sprayed back into the laundry in order to achieve optimum moisture penetration.

  The optimum water level is set at the end of the drenching phase. If necessary, the washing machine will pump water away and take in a little more fresh water.
- **Noises during the heating phase**
  Unusual bubbling noises can occur while the laundry and the drum are being heated.

Changing the programme (safety lock)

It is not possible to change the programme, the temperature, the spin speed or the selected Extras after the programme has started. This prevents the appliance being operated unintentionally, e.g. by children.

If the washing machine is switched off during active programme operation, the standby function does not switch the washing machine off completely after 15 minutes. Safety functions continue to be active because there may still be water inside the drum.

Interrupting a programme

- Switch the washing machine off with the ⏻ sensor.
- Switch the washing machine back on with the ⏻ sensor to continue with the same programme.

Cancelling a programme

You can cancel a programme at any time after it has started.

- Touch the *Start/Stop* sensor.

The following will appear in the display:

ℹ Cancel the programme?

- Select Yes.

The following will appear in the display:

Programme cancelled.

The suds will be pumped away.

- Wait until the door unlocks.
- Pull open the door.
- Remove the laundry.

Selecting another programme

- Close the door.
- Select the required programme.
- Add detergent to the detergent dispenser drawer, if necessary.
- Touch the *Start/Stop* sensor.

The new programme will begin.

Garment care label symbols

Washing	
The figure quoted in the bucket is the maximum temperature at which the garment can be washed.	
95	Normal agitation
60	Reduced agitation
30	Much reduced agitation
	Hand wash
	Do not wash

Programme selection examples

Programme	Garment care label symbols
Cottons	95 70 60 50 40 30
Minimum iron	95 60 50 40 30
Delicates	40 30
Woollens	
Silks	
Express 20	40 30
Automatic plus	40 30 40 30

Drying	
	Normal temperature
	Low temperature
	Do not tumble dry

Ironing	
	Approx. 200 °C
	Approx. 150 °C
	Approx. 110 °C Ironing with steam can cause irreversible damage.
	Ironing prohibited

Professional cleaning	
F	Dry clean only. The letters indicate the type of cleaning agent required.
P	
W	Wet cleaning
	Dry cleaning prohibited

Bleaching	
	Any oxidation bleach can be used
	Use oxygen bleach only
	Do not bleach

Creating a favourite programme

You can save your own customised wash programmes under names of your choice.

Option 1

- The main menu must be visible in the display. Touch the Favourites sensor.

The display will change to show the Favourites menu.

Touch the Create sensor.

The display will change to show the Create Favourites menu.

- Select the required programme.
- Select all the programme settings you want.
- Then select Save.
- Enter a name.

Option 2

You can save a programme which has been selected as a Favourite programme before you start it.

- Before the programme starts, touch the ☆ Save sensor.
- Enter a name.

If 12 Favourites have already been saved, the Create or ☆ Save sensor will not be visible. Delete an existing Favourite if you wish to create a new one.

Entering a name

It is best to select short, memorable names.

- Touch the letters or characters you want.
- Confirm with the Save sensor.

The wash programme will then be saved to the Favourites programme list.

Changing a Favourite programme

You can rename, delete or move a Favourite programme.

- Select Favourites from the main menu.
- Touch the Favourite programme that you wish to change until the Context menu opens.
- Select Rename, Delete or Move.

Washing assistant

The washing assistant helps you with loads consisting of items with different care instructions. The washing machine will use the list of items to put together a suitable wash programme.

- Scroll to the second page in the main menu.
- Touch the Washing assistant sensor.

A list of items will appear.

- Touch the appropriate sensor for your item of laundry.

The item selected will be highlighted orange. You can select several items.

With some items, helpful information will also appear in the display when they are selected.

- Confirm with the OK sensor.
- Follow the instructions in the display.

A summary of the selected parameters will then appear in the display.

- Confirm with the OK sensor or select Change if you would like to make any changes.

The programme which has been tailored to your laundry is ready to start.

Useful tip: You can add individual programme settings, e.g. *Extras* before you start the programme.

The Timer can be used to set the time at which a programme starts or finishes. The programme start can be delayed by up to 24 hours.

Setting the Timer

- Touch the Timer sensor.
- Select the Finish at or Start at option.
- Set the hours and the minutes and confirm your entry with the OK sensor.

Changing the Timer

The selected times for the Timer can be changed before the programme starts.

- Touch the or sensor.
- Change the specified time and confirm with the OK sensor.

Deleting the Timer

The selected time for the Timer can be deleted before the programme starts.

- Touch the or sensor.

The selected time for the Timer appears in the display.

- Touch the Delete sensor.
- Confirm with the OK sensor.

The selected time for the Timer is now deleted.

Starting the Timer

- Touch the *Start/Stop* sensor.

The door will lock and the time the programme starts will appear in the display.

After the programme has started, the selected time can only be changed or cancelled by interrupting the programme.

The programme can now be started.

- Touch the Start immediately sensor.

SmartStart

The *SmartStart* function (only functional in selected countries) lets you define a period of time during which your washing machine will start automatically. The appliance will start on receipt of a signal, e.g. from your energy supplier, that indicates that the electricity tariff is particularly economical.

This function is active when the SmartGrid setting is switched on.

The timeframe can be defined between 1 minute and 24 hours. During this period, the washing machine waits for the signal from the energy supplier. If no signal is sent during the defined period, the washing machine starts the wash programme.

Setting the timeframe

If you have activated the SmartGrid function in Settings, SmartStart by or SmartFinish by will appear in the display instead of Start at or Finish at when you touch the ◷ Timer sensor (see “Settings – SmartGrid”).

The procedure for setting this is the same as for setting the time for Delay start.

- Now set the time you want and confirm with the OK sensor.
- Touch the *Start/Stop* sensor to start the wash programme with *SmartStart*.

The selected programme will start automatically, as soon as the energy provider has sent the signal, or the latest calculated start time has been reached.

The procedure for changing or deleting the *SmartStart* function is the same as described for the Delay start function.

The correct detergent

All detergents produced for automatic front loading washing machines are suitable. Follow the manufacturer's instructions and dosage recommendations on the packaging.

The right amount to dispense will depend on the following:

- The soiling level of the laundry.
- The quantity of laundry.
- The water hardness level. Check with your local water authority if you do not know the water hardness level in your area.

Detergent dispensing aids

Use dispensing aids (e.g. balls) if these are supplied with the detergent, particularly when using liquid detergent.

Refill packs of detergent

When purchasing detergent, buy refill packs wherever possible. This helps reduce the amount of waste packaging.

Fabric softeners and liquid starch

Fabric softeners
make garments soft to handle and help prevent static cling when tumble drying.

Fabric shapers
are synthetic starches and give an even stiffer hold.

Starch
stiffens and gives body to items of laundry, e.g. shirts, tablecloths and bed linen.

Adding fabric softener or liquid starch separately

Prepare the starch in accordance with the manufacturer's instructions on the packaging.

Useful tip: When adding fabric softener, activate the Water plus Extra.

Dispensing via the detergent dispenser drawer

- Add fabric softener to the ❀ compartment or insert the appropriate capsule.
- Add liquid starch to the ❀ compartment and powder or viscous starch to the ⊔ compartment.
- Select the Separate rinse or Starch programme.
- Change the spin speed if necessary.
- If using a capsule, touch the CapDosing sensor and activate the Cap.
- Touch the *Start/Stop* sensor.

TwinDos dispensing

One of the automatic dispensing containers must be filled with fabric softener.

- Select the Separate rinse programme.
- Change the spin speed if necessary.
- Touch the TwinDos sensor.
- Touch the On sensor to activate TwinDos.
- Touch the *Start/Stop* sensor.

Colour run and dye removers/ dyes

⚠ Damage due to colour run/dye removers.
Colour run and dye removers can cause corrosion in the washing machine.
Do not use colour run or dye removers in this washing machine.

Dyes suitable for use in domestic washing machines can be used. However, please note that the salt used in the dyeing process can cause corrosion to stainless steel components in the machine if you use dye frequently. Always observe the manufacturer's instructions carefully.

When using the machine to dye fabric, it is essential to select the *Water plus* Extra.

Detergent recommendations

The recommendations apply across the entire temperature range of the wash programmes.

	Miele UltraPhase 1 and 2	Miele capsules	Miele capsules	Miele capsules	Universal detergent	Colour detergent	Detergent for delicates and woollens	Special-purpose detergent
Cottons	✓		✓	✓	✓	✓		
Minimum iron	✓		✓	✓		✓		
Delicates	✓	✓	✓				✓	
QuickPowerWash	✓				✓	✓		
Automatic plus	✓		✓	✓		✓		
Woollens		✓					✓	✓
Silks		✓					✓	✓
Express 20	✓		✓			✓[1]		
Shirts	✓		✓	✓	✓	✓		
Denim	✓	✓	✓			✓[1]		✓
Dark garments	✓	✓	✓			✓[1]		✓
Sportswear	✓	✓					✓	✓
Trainers	✓	✓					✓	✓
Outerwear		✓					✓	✓
Down filled items		✓					✓[1]	✓
Down duvets		✓					✓[1]	✓
Pillows							✓[1]	✓
Cottons hygiene	✓		✓	✓	✓	✓		
Curtains	✓			✓	✓[2]			✓
First wash	✓		✓			✓		
Cottons	✓		✓	✓	✓	✓		

✓ recommended
[1] Liquid detergent
[2] Powder detergent

Specialist detergents (e.g. WoolCare)
Fabric care (e.g. fabric softener)
Additive (e.g. booster)

Replacing the TwinDos cartridge

A message will appear in your washing machine display if a detergent cartridge is empty.

Preparing the cartridge

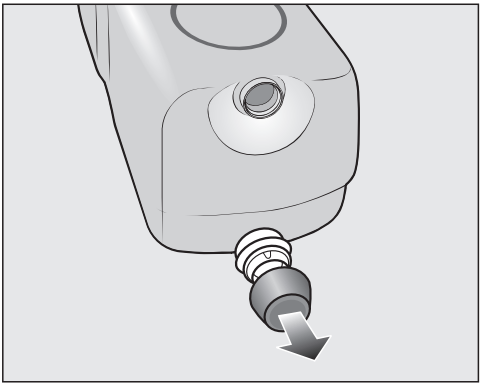

■ Remove the cover cap from the cartridge.

or

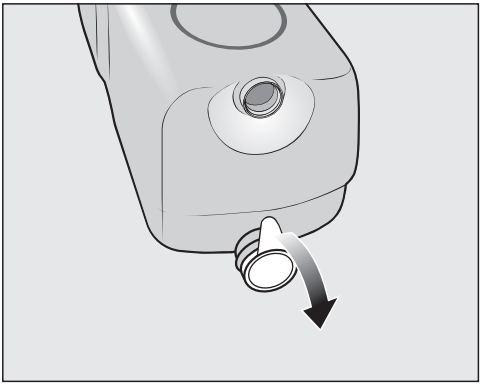

■ Remove the film seal from the cartridge completely.

⚠ Risk of damage from film seal

If the film seal is not removed completely, leaks can occur in the TwinDos system.

Remove the film seal from the suction port on the cartridge completely before inserting the new cartridge.

Replacing the cartridge

■ Switch on the washing machine.

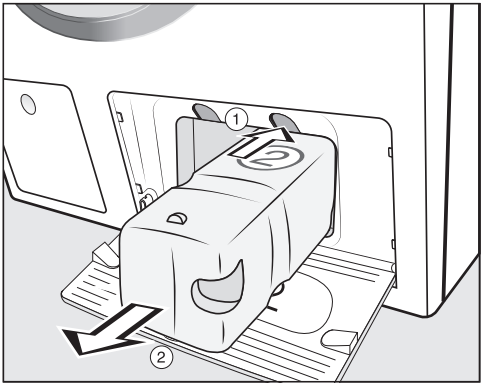

① To release the lock, press the yellow button above the cartridge.

② Pull out the cartridge.

■ Insert a new cartridge.

■ Confirm the messages in the display.

The counter is set to 0.

External casing and fascia panel

⚠ Risk of electric shock from mains voltage.
Mains voltage is present when the washing machine is switched off.
Disconnect the mains plug before cleaning or maintenance.

⚠ Damage due to ingress of water.
The pressure of a water jet can cause water to get into the washing machine, resulting in damage to components.
Do not spray the washing machine with a water jet.

- Clean the casing and control panel with a mild cleaning agent or soap and water and dry both with a soft cloth.
- The drum can be cleaned using a suitable stainless steel cleaning agent following the manufacturer's instructions on the packaging.

⚠ Damage due to cleaning agents.
Solvent-based cleaning agents, abrasive cleaners, glass cleaners or all-purpose cleaners can cause damage to plastic surfaces and other parts.
Do not use these cleaning agents.

Cleaning the detergent dispenser drawer

Washing at low temperatures and the use of liquid detergent can lead to a build-up of bacteria in the detergent dispenser drawer.

- Clean the entire drawer at regular intervals for hygiene reasons, even if you are using the TwinDos system exclusively.

Removing the detergent dispenser drawer

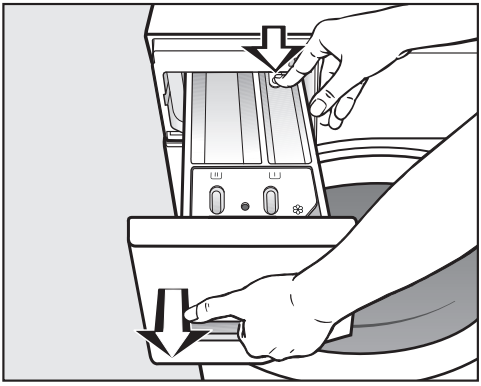

- Pull out the detergent dispenser drawer until a resistance is felt. Press down the release button and at the same time pull the drawer right out of the machine.
- Clean the detergent drawer with warm water.

Cleaning the siphon and the ❀/▭ compartment channel

Liquid starch results in clogging. If clogged, the siphon in the ❀/▭ compartment will not work and the compartment can overflow.

Clean the siphon particularly thoroughly after using liquid starch a few times.

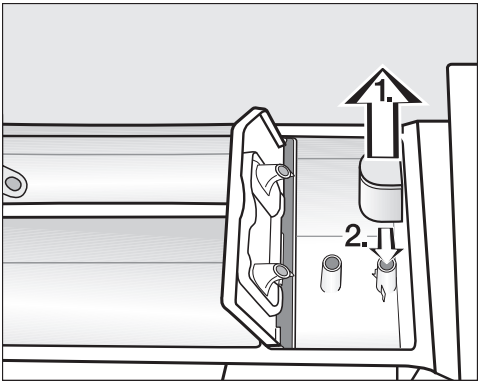

1. Remove the siphon from the ❀ compartment and clean under warm running water. Clean the siphon tube in the same way.
2. Refit the siphon.

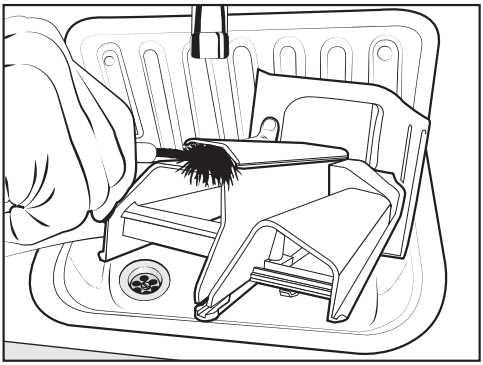

- Clean the fabric softener channel using a brush and warm water.

Cleaning the detergent dispenser drawer housing

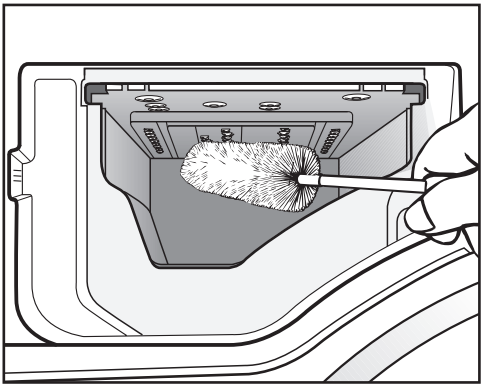

- Use a bottle brush to remove detergent residues and limescale from the jets inside the detergent dispenser drawer compartment.
- Replace the detergent dispenser drawer.

Useful tip: To assist drying, leave the detergent dispenser drawer slightly open.

Cleaning the drum (Hygiene info)

Washing at low temperatures and/or using liquid detergent can cause bacteria and unpleasant odours to build up in the washing machine. Use the Clean machine programme to clean the machine. Run this programme regularly or at the latest when the Hygiene info: Select "Maintenance" and start the "Clean machine" programme. message appears in the display.

TwinDos maintenance

⚠ Damage resulting from dried laundry detergent.
If the system has not been used for a long time (more than 2 months), detergent in the hoses can become viscous or dry out. The hoses can become blocked and would then need to be cleaned by a Customer Service technician.
Clean the TwinDos system.

To clean the system, you either need a "TwinDosCare" cleaning cartridge or a TwinDos refill cartridge, both of which are available to purchase from shop.miele.com.

The washing machine has a cleaning programme for the TwinDos system. Running the cleaning programme will clean the hoses inside the washing machine.

Starting the maintenance programme

- Switch on the washing machine.
- Scroll to the second page in the main menu.
- Touch the Maintenance sensor.

The display will then change to show the *Maintenance* menu.

- Select Clean "TwinDos".
- Touch the sensor for the container you want to clean.
- Confirm Start Maintenance programme? with the Yes sensor.
- Follow the instructions in the display.

The hoses will now be cleaned and the TwinDos system can be used again at any time.

Cleaning the compartment

Detergent residue can cause clogging.

- Use a damp cloth to clean the compartment interior when you change the cartridge or container.

Cleaning the water inlet filter

The washing machine has a filter to protect the water inlet valve. This filter should be checked every six months or so, or more often if there are frequent interruptions to the water supply.

- First turn off the tap.
- Unscrew the inlet hose from the tap.

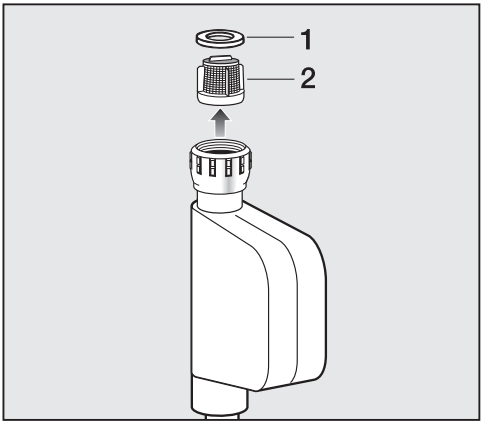

- Remove the rubber seal **1** from the recess.
- Using pointed pliers, take hold of the plastic filter bar **2** and remove it.
- Clean the filter and the seal.
- Put the filter and seal back in the reverse order and reconnect the hose.

Turn on the tap and check the connection is watertight. If water drips out, tighten the connection.

Never forget to put the filter back in place after cleaning.

Many malfunctions and faults can be easily remedied. You can save time and money in many cases, as you do not need to contact Customer Service.

More information to help you remedy faults yourself can be found at www.miele.com.au/support/customer-assistance or www.miele.co.nz/support/customer-assistance.

The programme does not start

Problem	Possible cause and remedy
The control panel remains dark.	There is no power to the machine. ■ Check whether the mains plug is plugged in and switched on. ■ Check whether the circuit breaker has tripped.
	The washing machine has switched off automatically to save energy. ■ Switch the machine back on.
Start/Stop is dark and cannot be activated	The washing machine has an automatic safety lock. The washing machine can only be started within 60 seconds of the last operational step. ■ Confirm the notification Touch "OK" to release the automatic child safety lock. on the display with *OK*. ■ You now have another 60 seconds in which to start the wash programme.
The following appears in the display: ⚠ Door will not lock. Call Miele.	The door is not closed properly. The door lock could not engage. ■ Close the door again. ■ Start the programme again. If the fault message appears again, contact Miele.

Fault messages at the end of a programme

Problem	Possible cause and remedy
ℹ Check detergent	Excessive foam has built up during washing. ■ Check the amount of detergent dispensed. ■ With automatic detergent dispensing, check the dosage amount set. ■ Observe the instructions on the detergent packaging and the degree of soiling of the laundry. ■ If necessary, reduce the dispensing quantity by increments of 10%.
ℹ Hygiene info: Select "Maintenance" and start the "Clean machine" programme.	A wash programme using a temperature above 60°C has not been run for a long time. ■ In order to prevent bacteria and unpleasant odours building up in the machine, run the *Clean machine* programme using Miele IntenseClean or powder detergent.
ℹ Check hot water intake	The water inlet for hot water is blocked or turned off. The programme was carried out using cold water. ■ Check whether the tap is turned on properly. ■ Check whether the inlet hose is kinked. ■ Check whether there is sufficient water pressure.
ℹ Intensive flow: Clean the filter and jet nozzle or remove foreign objects from the pump housing	The pumps are dirty. ■ Clean the pumps as described in "Problem solving guide - Opening the door in the event of a blocked drain outlet and/or power cut". ■ Restart the programme after cleaning.
	The jet in the top of the door ring is blocked with fluff. ■ Remove the fluff with your finger. Do not use any sharp or pointed tools to do this. ■ Restart the programme after cleaning.
	If the fault message appears again, contact Miele. The washing machine can still be used but with reduced functionality.

Problem	Possible cause and remedy
ℹ Align the machine. Laundry not properly spun.	The Pre-ironing Extra which runs at the end of the programme could not be carried out properly. ■ Check whether the washing machine is aligned correctly as described in “Installation – Levelling the machine”. ■ Check whether the maximum delivery height of 1 m has been exceeded.
	If the fault message appears again, contact Miele. The washing machine can still be used but with reduced functionality.

The messages will appear at the end of the programme and when the washing machine is switched on and need to be confirmed with the *OK* sensor.

Messages or faults with the TwinDos system

Problem	Possible cause and remedy
ℹ Only a few more washes possible. Please order new detergent for compartment ①.	The detergent in the cartridge is running low. There are between 4 and 8 wash cycles remaining. ■ Order a new cartridge.
ℹ “TwinDos” ① is empty. Check the wash result.	The cartridge is empty. ■ Replace the cartridge. ■ Check whether the laundry is clean. If it is not, there may not have been enough detergent. Wash the items again if necessary.
ℹ Use “TwinDos” or carry out “TwinDos” Maintenance in the “Maintenance” menu. See the operating instruction manual for more information.	TwinDos or automatic dispensing via compartment ① and/or ② has not been used for a long time. ■ Use TwinDos for one of your next loads. ■ Carry out the TwinDos maintenance programme as described in “Cleaning and care - TwinDos maintenance”.

Problem solving guide

Problem	Possible cause and remedy
⚠ "TwinDos" Maintenance for compartment ① must be started in the "Maintenance" menu. See the operating instruction manual for more information.	TwinDos or automatic dispensing via compartment ① and/or ② has not been used for a long time. It is possible that detergent has dried inside the hoses. ■ Carry out the TwinDos maintenance programme **immediately** as described in "Cleaning and care - TwinDos maintenance".
A new detergent cartridge has been inserted, but the cartridge is identified as empty when the machine is switched on.	The washing machine was switched off when the detergent cartridge was replaced. ■ Switch on the washing machine. ■ Remove the detergent cartridge and then reinsert it into the compartment. The counter is set to 0.
There are dark specks in the liquid detergent.	Mould has developed in the detergent. ■ Pour the liquid detergent out of the container and then clean the container thoroughly.
No detergent and/or fabric softener was dispensed.	Automatic dispensing has not been activated. ■ Touch the TwinDos sensor before running the next programme. Automatic dispensing will be activated.
	No detergent/fabric softener was dispensed although automatic dispensing was activated. ■ Try again. ■ If detergent is still not dispensed, call Miele.
The messages shown on this page are examples. They may differ depending on whether they refer to compartment ① or ②.	

The messages will appear at the end of the programme and when the washing machine is switched on and need to be confirmed with the *OK* sensor.

General problems with the washing machine

Problem	Possible cause and remedy
The washing machine smells.	Hygiene info was ignored. A programme using a temperature above 60°C has not been run for a long period of time. ■ In order to prevent bacteria and unpleasant odours building up in the machine, run the *Clean machine* programme using the Miele IntenseClean washing machine cleaner or powder detergent.
	The detergent dispenser drawer was left closed after washing. ■ Leave the detergent dispenser drawer slightly open to allow it to dry.
The machine shakes during the spin cycle.	The machine feet are not level. ■ Level the machine and adjust the feet correctly.
The laundry has not been spun properly and the laundry is still wet.	The machine detected an imbalance during the final spin and reduced the spin speed automatically. ■ Include both large and small items in the load as this will give better distribution.
The pump makes strange noises.	This is not a fault. These slurping noises occur at the end of the pump sequence as a normal part of operation.
The interior drum lighting does not come on.	The drum lighting will go out automatically after five minutes. ■ Open the pull-down menu from the overview menu and then touch the ☼ sensor.
	The drum lighting is faulty. ■ Call Miele.
Large amounts of detergent residue remain in the detergent dispenser drawer.	The water pressure is too low. ■ Clean the filter in the water inlet. ■ It may be useful to select the *Water plus* Extra.
	Powder detergent used with water softeners can be sticky. ■ Clean the detergent dispenser drawer and in future add washing powder and then add the water softener.

Problem solving guide

Problem	Possible cause and remedy
Fabric softener is not completely dispensed or too much water remains in the ❀ compartment.	The siphon tube is not correctly positioned, or is clogged up. ■ Clean the siphon (see “Cleaning and care - Cleaning the detergent dispenser drawer”).
At the end of the programme there is still liquid in the capsule.	The small pipe in the detergent dispenser drawer onto which the capsule is placed is blocked. ■ Clean the small pipe.
	This is not a fault. For technical reasons, a small amount of water will remain in the capsule.
There is water next to the capsule in the fabric softener compartment.	CapDosing was not activated or an empty capsule was not removed at the end of the last wash programme. ■ Make sure that you remember to activate CapDosing the next time you insert a capsule. ■ Remove and dispose of the empty capsule at the end of each programme.
	The small pipe in the detergent dispenser drawer onto which the capsule is placed is blocked. ■ Clean the small pipe.

An unsatisfactory wash result

Problem	Possible cause and remedy
Liquid detergent does not give the required result.	Liquid detergents usually contain no bleaching agents. They do not remove fruit, coffee and tea stains. ■ Use the Miele 2 Phase System. The targeted addition of UltraPhase 2 during the wash process removes stains effectively. ■ Use a general purpose powder detergent containing a bleaching agent.
White residues which look like powder detergent are seen on dark textiles after washing.	The detergent contained compounds (zeolites) to aid water softening which are not soluble in water. These have ended up on the laundry. ■ Try and brush off the residues with a soft brush once the laundry is dry. ■ Wash dark textiles using a detergent which does not contain zeolites. Liquid detergents usually do not contain zeolites. ■ Use the *Dark garments* programme.

Problem	Possible cause and remedy
Grey, greasy particles cling to washed laundry.	Insufficient amounts of detergent were used to break down the particles of grease in heavily soiled laundry. ■ Use more detergent or liquid detergent. ■ Before washing the next load, run the *Clean machine* programme using the Miele IntenseClean washing machine cleaner or a powder detergent.

The door will not open

Problem	Possible cause and remedy
The door cannot be pulled open during a programme.	The drum is locked during a programme. ■ Touch the *Start/Stop* sensor to cancel the programme. The programme is cancelled, the door unlocks and you can pull it open.
	There is still water in the drum and the machine is unable to drain. ■ Clean the drain filter and the drain pump as described in “Opening the door in the event of a blocked drain outlet and/or power cut”.
Extra cooling **appears in the display after a programme has been cancelled.**	For safety reasons, the door cannot be opened if the suds temperature is higher than 55°C. ■ Wait until the temperature in the drum has decreased and the message has gone out in the display.
The following appears in the display: ⚠ The door lock is jammed. Call Miele.	The door lock has jammed. ■ Call Miele.

Opening the door in the event of a blocked drain outlet and/or power cut

- Switch off the washing machine.

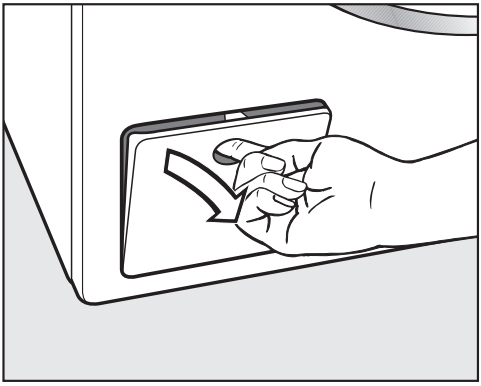

- Open the access panel for the drain pump.

Blocked drain outlet

If the drain outlet is blocked, a larger quantity of water can remain in the washing machine.

> ⚠ Risk of scalding due to hot suds.
> Escaping suds will be hot if laundry has been washed at high temperatures!
> Carefully allow all suds to drain off.

Procedure for draining the machine

> When removing the drain filter, do not remove it completely.

- Place a suitable container under the access panel, e.g. a universal oven tray.

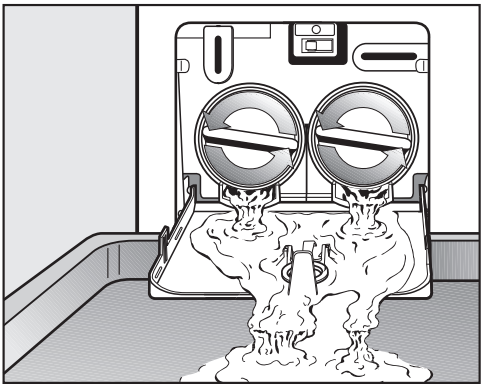

- Slowly and carefully unscrew the filters until water runs out. Be careful not to release too much water at once. If the flow of water is too strong, some water can seep into the machine base and activate the water protection system. This will prevent the machine from functioning.
- To interrupt the flow of water, tighten the filters again.

Once the flow of water ceases:

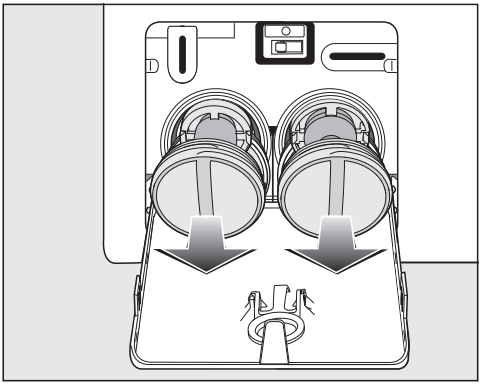

- Remove the filters completely.

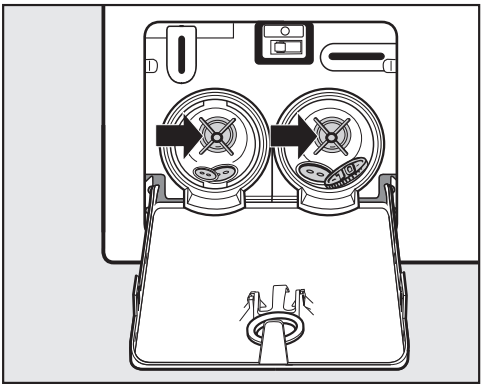

- Clean the filters thoroughly.
- Remove any foreign objects (e.g. buttons, coins etc.) and clean the interior. Turn the impellers by hand to check that they rotate freely.

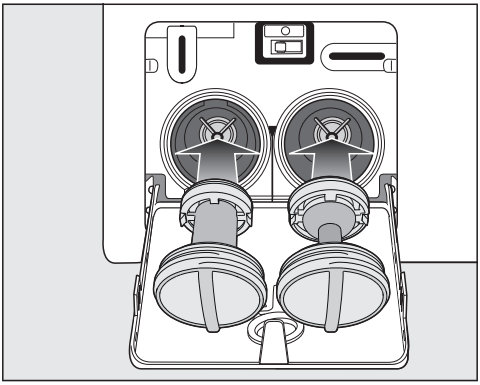

- Replace the filters correctly (on the right and left) and tighten them.
- Close the access panel for the drain pump.

⚠ Risk of water damage.
Make sure the drain filters are securely tightened. Otherwise there is a risk of water leakage during use.
Replace the drain filters correctly and tighten them securely.
Close the access panel for the drain pump.

Opening the door

⚠ Danger of injury due to rotating drum!
Reaching into a moving drum is extremely dangerous. Danger of injury!
Always make sure that the drum is stationary before reaching in to remove laundry.

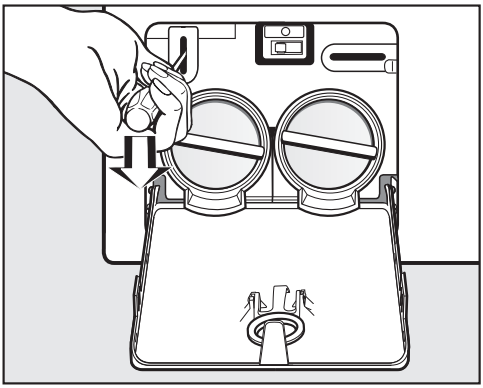

- Use a screwdriver to unlock the door of the machine as shown.
- Pull open the door.

You can find information on how to remedy faults yourself at www.miele.com.au/support/customer-assistance or www.miele.co.nz/support/customer-assistance and about Miele spare parts at www.miele.com.au/service or www.miele.co.nz/service.

Contact in case of fault

In the event of any faults which you cannot remedy yourself, please contact Miele.

You can book a Miele customer service call-out online at www.miele.com.au/service or www.miele.co.nz/service.

Contact information for Miele can be found at the end of this booklet.

Please quote the model and serial number of your appliance when contacting Miele. This information can be found on the data plate.

The data plate is found above the porthole glass when the door is opened.

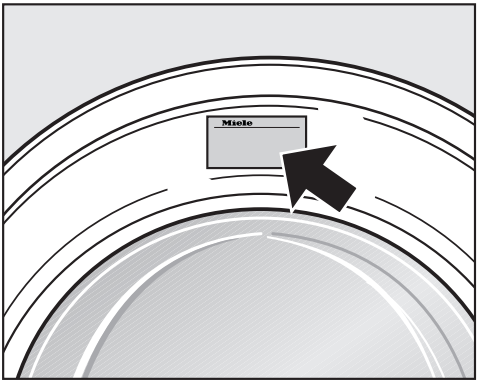

Optional accessories

Optional spare parts and accessories for this washing machine are available from Miele.

Warranty

The manufacturer's warranty for this appliance is 2 years.

For further information, please refer to your warranty booklet.

Front view

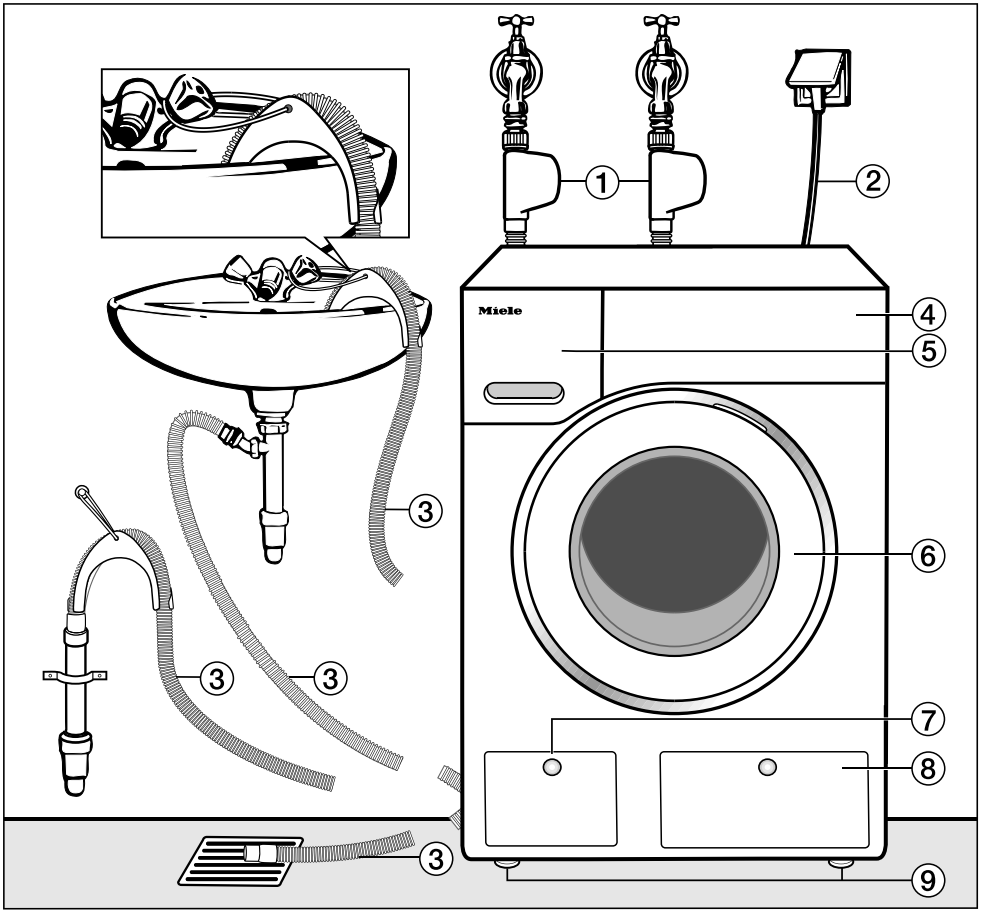

① Cold and hot water inlet hoses (tested to withstand pressures up to 7000 kPa)

② Electrical connection

③ Flexible drain hose (with detachable swivel elbow)

④ Control panel

⑤ Detergent dispenser drawer

⑥ Door

⑦ Access to filters, pumps and emergency release

⑧ Access panel for TwinDos cartridges

⑨ Four height-adjustable feet

Rear view

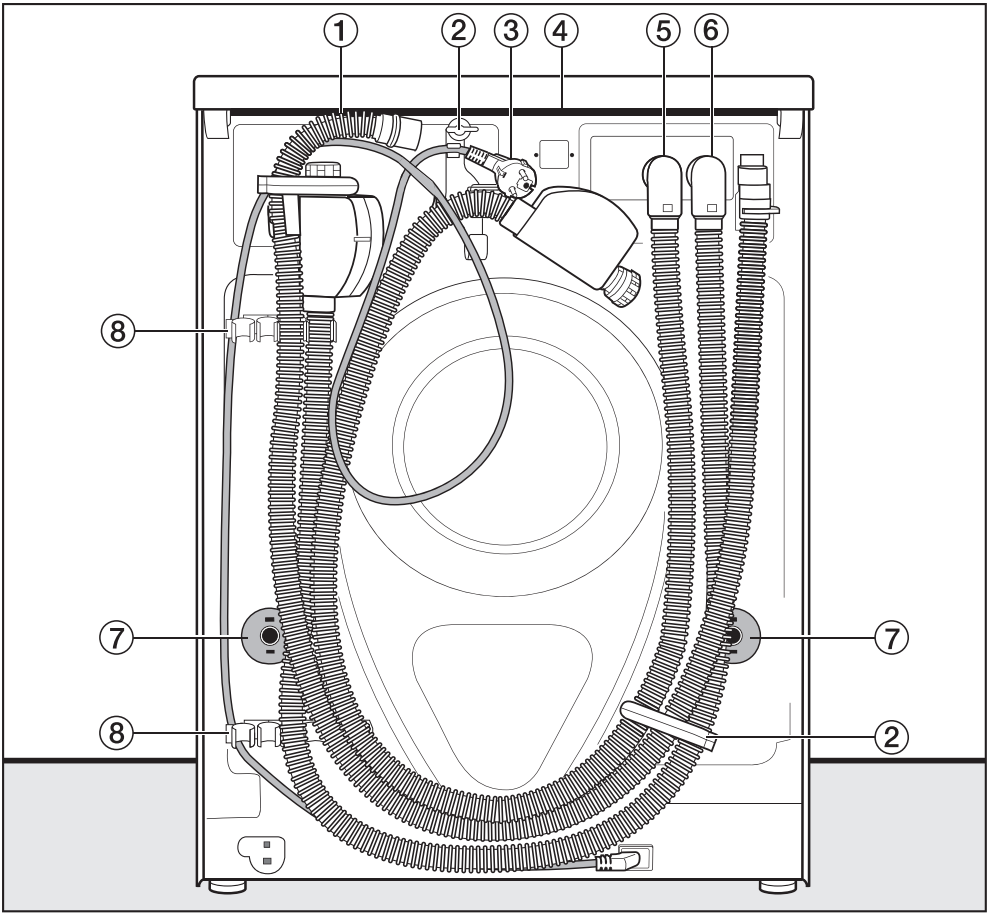

① Drain hose

② Transport clips for inlet and drain hoses and mains connection cable

③ Electrical connection

④ Protruding lid for holding when moving the machine

⑤ Cold water inlet hose with Waterproof system

⑥ Hot water inlet hose with Waterproof system

⑦ Safety caps for transit bars

⑧ Transport clips for inlet and drain hoses and for storing transit bars when not in use

Installation surface

A concrete floor is the most suitable installation surface. It is far less prone to vibration during the spin cycle than wooden floorboards or a carpeted surface.

Please note:

- The machine must be level and securely positioned.
- To avoid vibrations during spinning, the machine should not be installed on soft floor coverings.

If installing on a wooden joist floor:

- Install the machine on a plywood base (at least 59 x 52 x 3 cm). The base should span several joists and be bolted to the joists and not only to the floorboards. Check for the presence of pipes and cables first.

Useful tip: If possible, install the machine in a corner. This is usually the most stable part of the floor.

Transporting the washing machine to its installation site

⚠ Danger of injury due to unsecured lid.

Make sure the fixings at the back of the lid are secure. They may become brittle due to external circumstances. There is a danger of the lid being pulled off when carrying the appliance.

Before carrying the appliance, check that the lid is secure where it protrudes at the back.

- Carry the washing machine by the front feet and by the lid where it protrudes at the back of the appliance.

Removing the transport safety device

Removing the transit bars

Remove the left-hand transit bar first, followed by the right-hand transit bar.

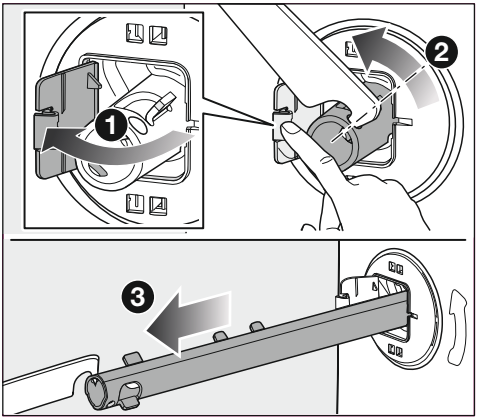

❶ Push the cover out.

❷ Using the spanner supplied, turn the transit bar 90°.

❸ Then pull the transit bar out.

- Remove the right-hand transit bar in the same way.

Covering the holes

⚠ Risk of injury from sharp edges!

There is a risk of injury from reaching into holes that are not covered.

After removing the transport safety device, cover the exposed holes.

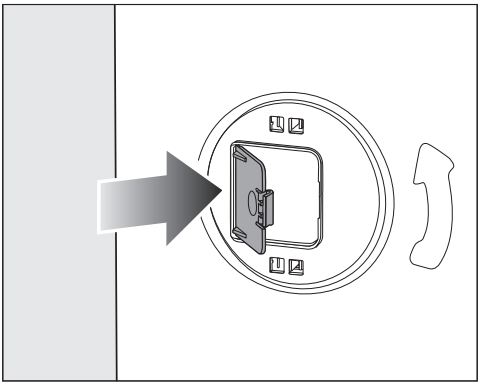

■ Press the covers firmly shut until they click into place.

Securing the transit bars

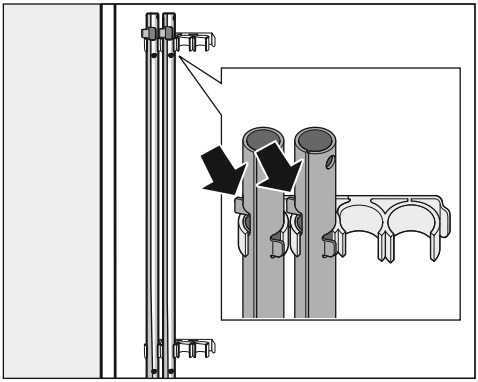

■ Secure the transit bars to the rear panel of the washing machine. Make sure that the top retainer is located above the holder.

Fitting the transit bars

Opening the flaps

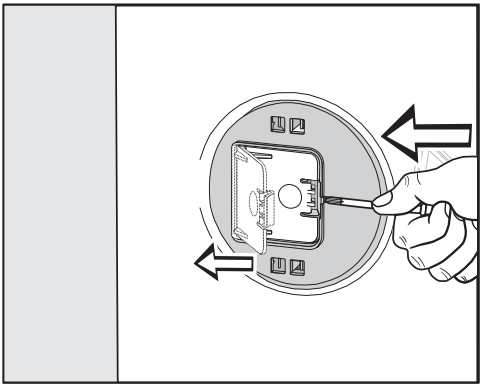

■ Push against the catch with a pointed object, e.g. a narrow screwdriver.

The flap will open.

Fitting the transit bars

■ Install the transit bars in reverse order to their removal.

Useful tip: If you lift the drum slightly, the transit bars can be pushed in more easily.

Levelling the machine

The washing machine must stand perfectly level on all four feet to ensure safe and proper operation.

Incorrect installation may increase electricity and water consumption and may cause the machine to move about.

Screwing out and adjusting the feet

The four adjustable screw feet are used for levelling the washing machine. All four feet are screwed in when the appliance is delivered.

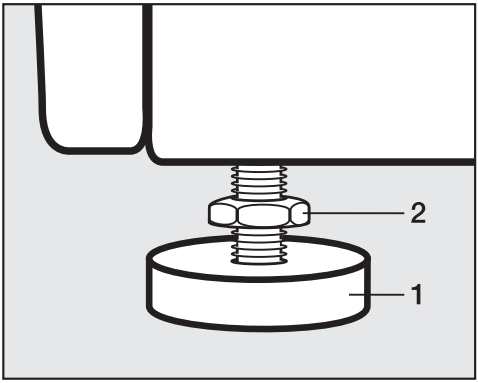

- Using the spanner supplied, turn counter nut **2** in a clockwise direction. Then turn counter nut **2** together with foot **1** to unscrew.

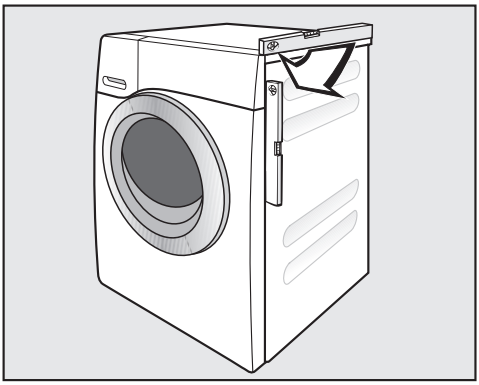

- Use a spirit level to check that the washing machine is standing level.
- Hold foot **1** securely with a pipe wrench. Turn counter nut **2** again using the spanner supplied until it sits firmly up against the housing.

⚠ Risk of damage due to incorrectly aligned washing machine.

There is a danger of the washing machine moving about if the feet are not secured.

Turn all four counter nuts for the feet until they sit firmly up against the housing. Please also check this for the feet which did not need adjustment.

Installing under a continuous worktop

⚠ Risk of electric shock due to exposed cables.
There is a risk of coming into contact with live parts while the lid is removed.
Do not remove the washing machine lid.

This washing machine (with lid intact) can be pushed under a worktop if there is space to do so.

Plinth

The washing machine can be installed on a plinth with drawer (please note the plinth may not be available in all countries).

The plinth must be purchased as a pair and secured to the second plinth supporting another tumble dryer or washing machine.

Washer and dryer stack

A Miele tumble dryer can be stacked with the washing machine. The appropriate “WTV” stacking kit* to match your tumble dryer is required.

All parts marked * are available from Miele.

Please note:

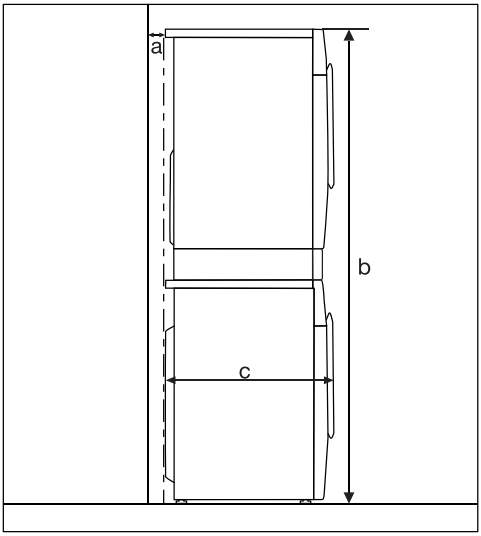

a = at least 2 cm

b = WTV without drawer: 172 cm
WTV with drawer: 181 cm

c = 65 cm

The Miele water protection system

The Miele water protection system protects all parts of the washing machine and surrounds from water damage.

The system consists of three main components:

- the inlet hose
- the electronic unit and drainage and overflow protection
- the drain hose

The Waterproof system (WPS)

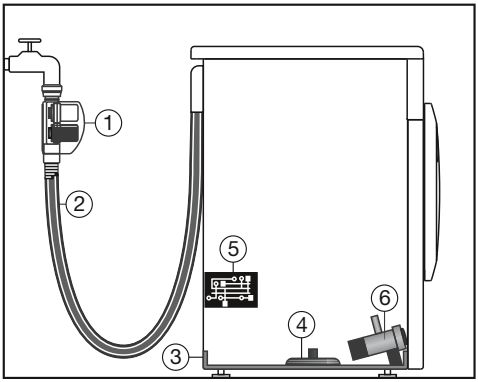

① Two solenoid valves

② Double-skinned inlet hose

③ Sump

④ Float switch

⑤ Electronic unit

⑥ Drain pump

The inlet hoses

- The casing on the inlet hoses contains two solenoid valves ①, which cut off the water intake directly at the tap. These valves provide two-fold protection. In the event that one of the valves is faulty, the other valve will cut off the water intake.
  Blocking the water intake at the tap means that the inlet hoses are only under pressure whilst water is being taken into the machine. For the remainder of the time, pressure on the inlet hoses is negligible.
- Protection against the solenoid valves bursting.
  The solenoid valves are pressure tested to between 7000 kPa and 10,000 kPa against bursting.
- The double-skinned inlet hoses ② have a pressure-resistant inner hose and a protective sleeve. Any leaking water is fed into the sump ③ through this protective sleeve. The float switch ④ closes the solenoid valves, preventing any more water flowing into the machine and water in the suds container is pumped away.

The electronic unit ⑤ and drainage and overflow protection

- Drainage protection
  Any leaking water is collected in the sump ③ in the base of the machine. A float switch ④ closes the solenoid valves ①, preventing any more water from flowing into the machine and water in the suds container is pumped away.
- Overflow protection
  If the water level exceeds a certain level, the drain pump ⑥ switches in and pumps the excess water away in a controlled manner.
  Should the water level rise repeatedly in an uncontrolled way, the drain pump ⑥ will switch on continuously, the washing machine will indicate that there is a fault and a tone will sound.

Drain hose

The drain hose is protected by a ventilation system which prevents the washing machine from being emptied completely.

Connection to the water supply

⚠ Health risk and risk of damage due to contaminated mains water.
The quality of the water used must correspond to the drinking water specification of the country in which the washing machine is being operated.
Always connect the washing machine to potable water.

⚠ Risk of electric shock from mains voltage.
There are live electrical components in the water inlet hose.
The water inlet hose must never be connected in an area subject to spray water, e.g. from a bath or shower.

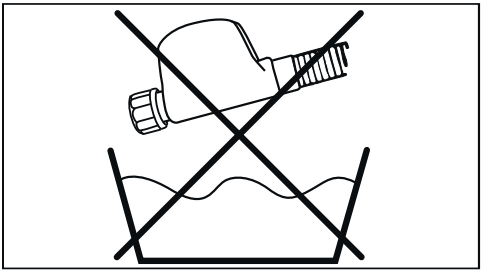

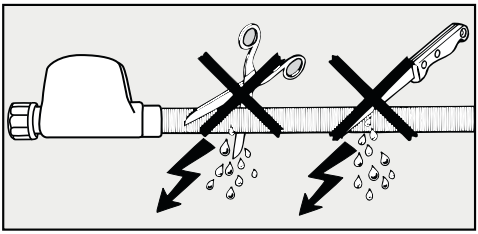

The protective sleeve must not be damaged or kinked.

The washing machine must be connected to a mains water supply in accordance with current local and national safety regulations.

The water connection pressure needs to be between 100 kPa (1 bar) and 1000 kPa (10 bar). If the water pressure exceeds 1000 kPa (10 bar), a pressure reducing valve must be installed.

A tap with a ¾ inch threaded union is required for the connection of each hose. If this is not available, only a qualified plumber may connect the washing machine to the mains water supply.

Connecting water inlet hoses

Useful tip: Detailed information is available via the QR code on the front page.

- Screw the water inlet hoses with the nut onto the thread of the taps.

To prevent damage to the inner hose, hold the valve casing firmly and turn the nut.

- Slowly turn on the taps and check the connections for leaks.
- Correct the position of the seal and screw thread if necessary.

Maintenance

Only use a **Miele Waterproof system** hose should you need a replacement.

⚠ Damage caused by dirty water.
This washing machine has a filter in the hose connection to the casing to protect the solenoid valves.
This filter must not be removed.

This washing machine can be operated with cold mains water only or cold and hot water.

⚠ Damage caused by incorrect water connection.
Connection to hot water only is not permitted. The washing machine requires a cold water connection when operating with hot water in order to control the temperature of the wash water.
Always connect the washing machine to cold mains water.

Programming the washing machine for hot water operation is described in “Settings - Water intake”.

Markings on the water inlet hoses

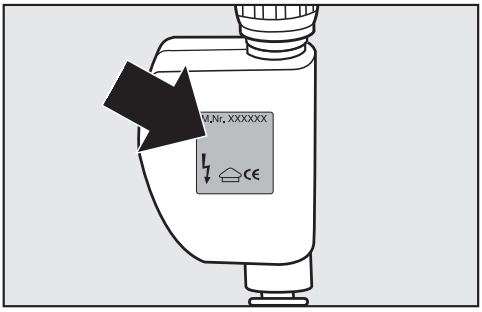

Cold water (cold mains water)	=	silver label
Hot water	=	red label

Cold water (default setting)

The washing machine will be operated with cold mains water only.

The other inlet hose is secured to the back of the washing machine.

Hot water

- The preferred temperature is 55°C. The temperature must not exceed 60°C. Consult a qualified plumber if the temperature exceeds 60°C.
- You can heat up your water with cheaper, primary energy sources, e.g. gas, solar power, oil.
- Before connecting to the mains water tap, check that the outflow of cold water does not exceed 5 litres. Each additional litre of cold water reduces the energy efficiency.
- If the hot water tap is turned off for some time, the washing machine will automatically switch to the cold water connection. This safety measure is not intended for the permanent operation of the appliance. The washing machine continues to wash using hot water operation, but washing results are impaired.

Drainage

The suds are drained through a drain pump with a 1 m high delivery head. For the water to drain freely, the hose must be free of kinks.
If required, the hose can be extended to a length of up to 5 m. The necessary parts can be ordered from Miele (depending on country).

For a delivery head of more than 1 m (up to a max. of 1.8 m), a replacement drain pump will need to be fitted. Please contact Miele for advice.
For a delivery head of 1.8 m, the hose can be extended to a length of up to 2.5 m. The necessary parts can be ordered from Miele (depending on country).

Drain hose connection options

1. Directed into a laundry trough or tub or into the sud-saver pipe of a laundry trough or tub.

   Please note:

   – Hook the hose over the edge and secure it.

   – Make sure that the water can drain away freely without hindrance. Otherwise there is a risk of water overflowing or of some of the drained water being sucked back into the machine.

2. Connected securely to a trapped waste pipe.
3. Connected securely to a floor drain (gully).

Using the elbow

To prevent the drain hose from slipping, use the enclosed elbow.

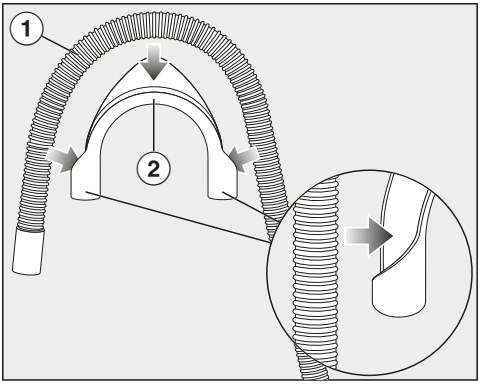

■ Attach the elbow ② to the drain hose ①.

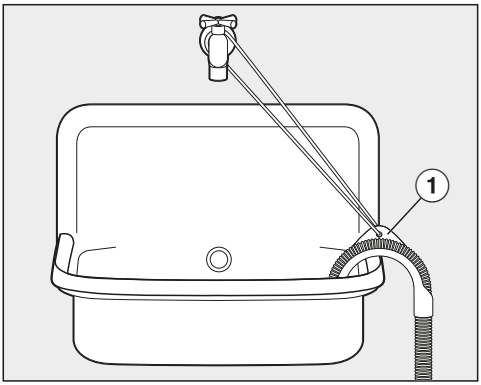

■ Hang the drain hose over the sink.

■ Secure the elbow from slipping using a strap and the eyelet ①.

Direct connection to a sink drain outlet

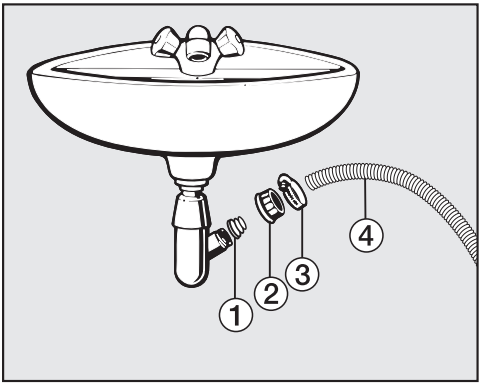

① Adapter

② Washbasin nut

③ Hose clip

④ End of the hose

■ Fit the adapter ① to the sink drain outlet using the nut ②.

■ Attach the end of the hose ④ to the adapter ①.

■ Use a screwdriver to tighten the hose clip ③ up close to the nut.

Electrical connection

The washing machine is supplied with a mains cable with moulded plug ready for connection to a switched socket.

The socket should be easily accessible after the machine has been installed. If the switch is not accessible after installation, an additional means of disconnection must be provided for all poles.

⚠ Risk of fire from overheating!
Connecting the washing machine to a multi-socket plug adapter or to an extension lead can overload the cable.
Do not use an extension lead or multi-socket plug adapter.

All electrical work must be carried out by a suitably qualified and competent person, in strict accordance with national and local safety regulations.

For extra safety, it is advisable to install a suitable residual current device (RCD) with a trip current of 30 mA. Ensure power is not supplied to the appliance until after the installation has been completed.

If the mains connection cable is damaged, it must only be replaced with a specific mains connection cable of the same type (available from Miele). For safety reasons, such replacement may only be carried out by a suitably qualified and competent technician or by a Miele authorised service technician, in order to avoid a hazard.

The data plate indicates the nominal power consumption and the appropriate fuse rating. Compare this information with the data of the on-site electrical connection.
If in any doubt, consult a qualified electrician.

Temporary or permanent operation with a self-sufficient or non-mains synchronous energy supply system (e.g. isolated networks, back-up systems) is possible. A requirement for the operation is that the energy supply system complies with all current local and national requirements that apply to stand-alone, solar and/or battery systems.
The protective measures provided in the domestic installation and in this Miele product must also be assured in their function and operation in isolated operation or in non-mains synchronous operation, or replaced with equivalent measures in the installation.

Consumption data

Programmes		Load kg	Energy kWh	Water Litres	Duration h:min	Temperature[1] °C	Residual moisture %	Speed rpm
Cottons	60	9.0	1.45	65	2:29	55	50	1600
	20	9.0	0.45	75	2:39	24	50	1600
Minimum iron	30	4.0	0.60	57	1:59	34	30	1200
Express 20[2]	40	3.5	0.33	30	0:20	26	60	1200
Woollens	30	2.0	0.23	35	0:39	–	–	1200
QuickPowerWash	40	4.0	0.58	40	0:49	–	–	1600

[1] Maximum laundry temperature reached in main wash.

[2] *Quick* Extra activated

Information for customers:

Consumption data can vary from the nominal values listed depending on water pressure, water hardness, water inlet temperature, room temperature, type and volume of load, fluctuations in the electricity supply and any Extras selected.

The consumption data displayed in Feedback can vary from the consumption data listed in the consumption data chart. Variations occur due to component tolerances and on-site conditions, e.g. mains water pressure fluctuations, mains voltage and mains voltage fluctuations.

Height	850 mm
Width	596 mm
Depth	643 mm
Depth with door open	1077 mm
Height for building under	850 mm
Width for building under	600 mm
Weight	Approx. 95 kg
Capacity	9,0 kg dry laundry
Supply voltage	See data plate
Rated load	See data plate
Fuse rating	See data plate
Consumption data	See "Consumption data"
Minimum water flow pressure	100 kPa (1 bar)
Maximum water flow pressure	1000 kPa (10 bar)
Water inlet hose length	1.60 m
Drain hose length	1.50 m
Mains connection cable length	2.00 m
Drain pump head height max.	1.00 m
Drain pump length max.	5.00 m
LEDs	Class 1
Test certifications awarded	See data plate
Power consumption when switched off	0.30 W
Networked standby	0.70 W
Frequency band	2.4000 GHz – 2.4835 GHz
Maximum transmission power	< 100 mW

You can use the settings to alter the machine's electronics to suit changing requirements.

Settings can be altered at any time.

Calling up settings

- Switch on the washing machine.
- Scroll to the second page in the main menu.
- Touch the Settings sensor.

The display will change to show the Settings menu.

Selecting settings

The settings are grouped into different areas.

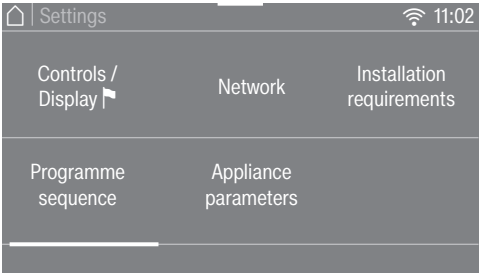

- Select the required area.
- Scroll through the list until the setting you want appears.
- Touch the sensor to select the setting you require.

Changing a setting

- Change the value displayed and confirm with OK.

or

- Touch an option to select it.

An option which is selected will be highlighted orange.

The option is saved. The display will then switch to the Settings menu, or go back to the previous menu level.

Closing the Settings menu

- Touch the ⮌ sensor.

The display will then go back to the previous menu level.

- Touch the ⌂ sensor.

The display will change to show the main menu.

Controls / Display ⚑

Language ⚑

The display can be set to appear in one of several different languages.

The flag ⚑ after the word *Language* (Sprache in German) acts as a guide in case a language which is not understood has been set.

The language selected is saved.

Consumption

In this setting you can check the saved energy and water consumption values and enter the energy cost.

Options

- Previous programme
  the consumption for the last programme carried out.
- Total consumption
  Shows the total of the energy and the total of the water used by the previous programmes.
- Set the cost
  You can enter the cost for energy (electricity) and water.

Code

The code prevents the washing machine being used without your knowledge.

Options

- Activate
  If you activate the code, you have to enter a code after switching the washing machine on. Otherwise it cannot be operated.
  The factory default code is 125.
- Change
  If wished, you can set a different three-digit code.

⚠ Do not forget the code you have set.
If you forget the code, only a Miele service technician can unlock the washing machine.
Important! Make a note of your new code.

- Deactivate
  The washing machine is to be operated again without entering a code. This only appears if the code has been activated previously.

Memory

The washing machine will save the last settings (temperature, spin speed and some of the Extras) selected for a programme after the programme has started.

When the programme is chosen again, the saved settings will appear in the display.

Memory is deactivated as standard.

Clock display

After selecting the clock format, you can set the time of day.

Clock format

- 24 h clock (default setting)
- 12 h clock

Time

- The time of day can be set.

Volume

Finish tone

The volume can be changed for the buzzer that sounds at the end of the programme.

It can be set to one of seven different settings or switched off altogether.

Keypad tone

The volume of the tone that sounds when a sensor is touched can also be changed.

It can be set to one of seven different settings or switched off altogether.

Display brightness

The brightness of the display can be altered.

It can be set to one of seven different settings.

Temperature unit

The temperature can be displayed as degrees Celsius (°C) or Fahrenheit (°F).

The factory setting is Celsius (°C).

“Display” off status

The display and the sensor control lighting is switched off to save energy. The *Start/Stop* sensor flashes slowly.

Options

- Off
  The lighting remains switched on.
- On (factory default setting)
  The lighting switches off after 10 minutes.
- On, not in current prog.
  The lighting remains switched on throughout the programme. The lighting switches off 10 minutes after the programme has ended.

Programme sequence

TwinDos

You can set the type of detergent and dispensing quantities and check the level of the UltraPhase 1 and UltraPhase 2 cartridges.

Select detergent

If you wish to use your own detergent with the TwinDos function instead of UltraPhase 1 and 2, you will need to purchase the empty TwinDos containers separately (optional accessories).

UltraPhase 1 and 2 can only be dispensed as a package. If a different agent is selected, the setting for the other compartment is automatically deleted.

The following agents can be used:

- Miele UltraPhase 1
- Miele UltraPhase 2
- Universal detergent
- Colour detergent
- Delicates detergent
- Delicates/Woollens
- Fabric softener

Follow the manufacturer's instructions on dosage given on the packaging.

The dosage amount required for the agent being used must be set. Follow the instructions in the display on how to do so.

Useful tip: If you select No agent, the respective TwinDos compartment will be deactivated.

Change dosage

The values set for dispensing detergent from compartments ① and ② can be checked and corrected.

Soiling

You can specify the default setting for the degree of soiling.

The following soiling levels are available to choose from:

- Light
- Normal
- Heavy

The factory default setting is: Normal

Water plus level

There are four different water levels which can be selected for the Water plus Extra.

Levels

- Normal (factory default setting)
- Plus ♢
- Plus ♢♢
- Plus ♢♢♢

Maximum rinse level

The water level in the rinse can be permanently set to the highest value.

This function is important for allergy sufferers as it achieves excellent rinse results. The water consumption will be increased.

The maximum rinse level is deactivated as standard.

Soak duration

You can set a duration for the soak process of between 30 minutes and 6 hours.

A duration can be selected in 30-minute increments. When the *Soak* Extra is selected, the laundry will be soaked for the duration selected.

A duration of 0:30 h is set as standard.

Longer pre-wash Cottons

If you require a longer pre-wash, you can extend the standard pre-wash time of 25 minutes in the *Cottons* programme.

- Normal (factory default setting)
  25-minute pre-wash.
- + 6 min
  31-minute pre-wash.
- + 9 min
  34-minute pre-wash.
- + 12 min
  37-minute pre-wash.

Gentle action

With gentle action activated, drum agitation is reduced. In this way, lightly soiled items can be washed more gently.

Gentle action can be activated for the *Cottons* and the *Minimum iron* programmes.

Gentle action is deactivated as standard.

Anti-crease

The Anti-crease function helps prevent creasing if laundry is not going to be removed immediately after the end of the programme.

The drum continues to turn at intervals for up to 30 minutes at the end of the programme. The washing machine door can be unlocked at any time by touching the *Start/Stop* sensor and then opened.

Anti-crease is deactivated as standard.

Network

Miele@home

Control the networking of your washing machine with your Wi-Fi network.

The following points may appear in the submenu:

Set up

This message only appears if the washing machine has not yet been connected to a Wi-Fi network.

Please refer to “Before using for the first time” for instructions on how to set up the connection.

Activate

(visible if Miele@home is deactivated)

The Wi-Fi function is reactivated.

Deactivate

(visible if Miele@home is activated)

Miele@home remains set up, the Wi-Fi function is switched off.

Connection status

(visible if Miele@home is activated)

The following values are displayed:

- the quality of Wi-Fi reception
- the network name
- the IP address

Set up again

(visible if set up)

Resets the Wi-Fi login (network) to immediately re-establish a new connection.

Reset

(visible if set up)

- The Wi-Fi is switched off.
- The Wi-Fi connection will be reset to the factory default setting.

The network configuration should be reset whenever a washing machine is being disposed of or sold, of if a used washing machine is being put into operation. This is the only way to ensure that you have removed all personal data, and in the case of the latter, the previous owner can no longer access the washing machine.

A new connection set-up has to be carried out in order to use the Miele@home setting again.

SmartGrid

The SmartGrid setting (available depending on country) is only visible if the Miele@home setting is set up and activated.

You can set your washing machine to start automatically based on an external signal within a certain time period.

Activating SmartGrid gives the *Timer* sensor a new function. Use the “Timer” sensor to set *SmartStart*. The washing machine will then start within the time period specified by you when it receives an external signal. If an external signal has not been received by the latest start time set, the washing machine will start automatically (see “Timer”).

SmartGrid is deactivated as standard.

Remote control

The Remote control setting (available depending on country) is only visible if the Miele@home setting is set up and activated.

Once the Miele App has been installed on your mobile device, you can check the status of your washing machine from anywhere and start it remotely. You can also control it remotely via the *MobileStart* function.

You can switch off the Remote control setting if you do not want to operate the washing machine with your mobile device.

If Remote control is not switched on, the App can cause the programme to be cancelled.

Use the “Timer” sensor to set a timeframe within which you want to start the washing machine and the timer (see “Timer”).
The washing machine will then start within the timeframe specified when it receives your signal.
If it has not received a start signal by the latest start time set, the washing machine will start automatically.

Remote control is activated as standard.

RemoteUpdate

The RemoteUpdate menu option is only displayed and can only be selected if the requirements for using Miele@home have been met (see “Before using for the first time – Miele@home”).

The RemoteUpdate function is used for updating the software in your washing machine. If an update is available for your washing machine, it will automatically download it. Updates will not be installed automatically. They must be initiated manually.

If you do not install an update, you can continue to use your washing machine in the usual way. However, Miele recommends installing updates.

Activating/Deactivating

RemoteUpdate is activated as standard. Available updates will be downloaded automatically but will only be installed if you initiate installation manually.

Deactivate RemoteUpdate if you do not want any updates to be downloaded automatically.

Running a RemoteUpdate

Information about the content and scope of an update is provided in the Miele App.

A message will appear in your washing machine display if a software update is available.

You can install the update immediately or postpone this until later. When the washing machine is switched on again, you will be reminded about the update.

Deactivate RemoteUpdate if you do not wish to install updates.

The update can take several minutes.

Please note the following information about the RemoteUpdate function:

- You will only receive a message when an update is available.
- Once an update has been installed, it cannot be undone.
- Do not switch off the washing machine during an update. Otherwise, the update will be aborted and will not be installed.
- Some software updates can only be carried out by a Miele service technician.

Appliance parameters

Water intake

You can programme the washing machine to hot water operation.

Options

- Cold water (factory default setting)
  The washing machine will be operated with cold water only.
- Hot water main wash
  If the wash temperature exceeds 30°C, the wash temperature in the main wash is achieved by mixing cold and warm water.

Legal information

Open source licences

You can view information here.

Copyright and licences for operating and control software

For the purpose of operating and controlling the appliance, Miele uses proprietary or third-party software that is not covered by open source licensing terms. These items of software/software components are protected by copyright. The copyright powers of Miele and third parties must be respected.

In addition, the appliance contains software components which are distributed under open source licensing terms. You can access these open source components along with the associated copyright notices, copies of the valid licensing terms and any further information in the appliance under the menu option Settings | Appliance parameters | Legal information | Open source licences. The liability and warranty arrangements for the open source licences displayed at this location only apply in relation to the respective rights holders.

Copyright and licences for the communication module

For the purpose of operating and controlling the communication module, Miele uses proprietary or third-party software that is not covered by open source licensing terms. These items of software/software components are protected by copyright. The copyright powers of Miele and third parties must be respected.

In addition, the communication module contains software components which are distributed under open source licensing terms. The open source components contained in the appliance along with the corresponding copyright notices, copies of the licensing terms valid at the time, and any further information can be accessed locally via IP using a web browser *(http://<IP address>/Licenses)*, where <IP address> is the IP address of the appliance. The liability and warranty arrangements for the open source licences displayed in this location only apply in relation to the respective rights holders.

Installation requirements

Low water pressure

If the water pressure is below 100 kPa (1 bar), the programme will be cancelled and a fault message will appear.

If the on-site water pressure cannot be increased, activating this function will prevent the programme from being cancelled.

Low water pressure is deactivated as standard.

Suds cooling

When this is activated, additional water flows into the drum at the end of the main wash to cool the suds down. Hot suds can damage plastic drainage pipes.

Suds cooling takes place when a Cottons programme with a temperature of 70°C or higher is selected.

Suds cooling should be activated:

- to prevent the danger of scalding if the drain hose is hooked over the edge of a sink or basin.

Suds cooling is deactivated as standard.

Temperature reduction

At high altitudes water has a lower boiling point. Miele recommends activating the Temperature reduction setting at altitudes of 2000 m or above to prevent water from boiling. The maximum temperature is reduced to 80°C even if a higher temperature is selected.

The Temperature reduction setting is deactivated as standard.

Miele Australia Pty. Ltd.
ACN 005 635 398
ABN 96 005 635 398

Level 4, 141 Camberwell Road
Hawthorn East, VIC 3123

1300 464 353 (1300 4 MIELE)
info@miele.com.au
www.miele.com.au

Miele New Zealand Limited
IRD 98 463 631

8 College Hill
Freemans Bay, Auckland 1011

0800 464 353 (0800 4 MIELE)
customercare@miele.co.nz
www.miele.co.nz

Miele Global Headquarters
Germany
Miele & Cie. KG
Carl-Miele-Straße 29
33332 Gütersloh
Federal Republic of Germany

Miele

WWR 861 WPS

en-AU, NZ

M.-Nr. 12 964 670 / 00