ENGLISH

FORNO

Alta Qualita

FREESTANDING GAS RANGE

Intertek
5015011

Conforms to CSA / ANSI STD Z21.1
Certified to CSA STD 1.1

INSTALLATION GUIDE

SPECIFICATIONS, INSTALLATION, AND MORE

MODEL NUMBERS:

FFSGS6277-30 FFSGS6277-30BLK FFSGS6277-30WHT	FFSGS6274-30 FFSGS6274-30BLK FFSGS6274-30WHT	FFSGS6277-36 FFSGS6277-36BLK FFSGS6277-36WHT

08/2025

TABLE OF CONTENTS

Customer Care	3
Warranty	4
Consumer Information	6
Important Safety Information	7
Features of Your Range	11
Installation Instructions	12
Door Handle Installations	13
Oven Racks Installation	13
Electrical	14
Gas Supply	14
Electric Power Supply Requirements	15
Pressure Regulator	15
Gas Shut-off Valve	15
Product Dimensions and Cabinets	16
Exhaust Hood Installation	19
Gas Conversion Operation	20
Gas Supply Connection	25
Cooktop Operation	26
Ignition	26
Simmer and Boil	26
Burner Grates	27
Griddle Operation	27
Air Fryer	27
Cooktop Cleaning Tips	28
Oven Light	28
Oven Operation	29
Oven Thermostat & Cooking Time	30
Care and Cleaning Recommendations	30
Troubleshooting Tips	31
Please Read Before Using Your Oven	33
Wire Diagram	34

Customer Care

Thank you for purchasing a Forno product. Please read the entire instruction manual before operating your new appliance for the first time. Whether you are an occasional user or an expert, it will be beneficial to familiarize yourself with the safety practices, features, operation and care recommendations of your appliance.

Both the model and serial number are listed inside the product. For warranty purposes, you will also need the date of purchase .

Product Information

Model Number : _____

Serial Number :

Date of Purchase :_____

Purchase Address And Phone : _____

_____

_____

Service Information

Use these numbers in any correspondence or services calls concerning your product.

If you received a damaged product, immediately contact Forno.

To save time and money, before you call for serviced, check the troubleshooting guide. It listed the causes of minor operation problems that you can correct yourself.

"Need some quick help? Simply scan the qr code and get access to our fast support form. We're always here to assist you with any questions or concerns you may have. So, don't hesitate to reach out!"

Services in Canada and Untied States

Keep the instruction manual handy to answer your questions. If you don't understand something or need more assistance, please visit our website for fast support. Please provide us your name, number, address,serial number of the product that troubleshooting, proof of purchase, and a short description of the issue. A customer service representative will contact you as soon as possible. All warranty work needs to be authorized by FORNO customer service. All our authorized service providers are carefully selected and rigorously trained by us.

Warranty

What this limited warranty covers:
The Warranty coverage provided by Forno Appliances in this statement applies exclusively to the original Forno appliance (“Product”) sold to the consumer (“Purchaser”) by an authorized Forno dealer/distributor/retailer, purchased and installed in the United States or Canada, and which has always remained within the original country of purchase (the United States or Canada). Warranty coverage is activated on the date of the Product's original retail purchase and has a duration of two (2) years. This warranty does not cover installation at the time of purchase or during replacement.

Warranty coverage is non-transferable. In the event of replacement of parts or of the entire product, the replacement Product (or parts) shall assume the remaining original Warranty activated with the original retail purchase document. This Warranty shall not be extended with respect to such replacement. Forno Appliances will repair or replace any component/part which fails or proves defective due to materials and/or workmanship within 2 years of the date of the original retail purchase and under conditions of ordinary residential, non-commercial use. Repair or replacement will be free of charge, including labor at standard rates and shipping expenses. Purchaser is responsible for making the Product reasonably accessible for service. Repair service must be performed by a Forno Authorized Service company during normal working hours.

IMPORTANT
Retain proof of original purchase to establish warranty period. Forno’s liability on any claim of any kind, with respect to the goods and/or services provided, shall in no event exceed the value of the goods or service or part there of which has given rise to the claim.

30-Day Cosmetic Warranty
The Purchaser must inspect the product at the time of delivery. Forno warrants that the Product is free from manufacturing defects in materials and workmanship for a period of thirty (30) days from date of the original retail purchase of the Product.
This coverage includes:
- Paint blemishes
- Chips
- Macroscopic finish defects

Cosmetic warranty does NOT cover:
> issues resulting from incorrect transport, handling and/or installation (e.g.: dents, broken, warped or deformed structures or components, cracked or otherwise damaged glass components);
> slight color variations on painted/enameled components;
> differences caused by natural or artificial lighting, location or other analogous factors;
> stains/corrosion/discoloration caused by external substances and/or environmental factors;
> labor costs, display, floor, B-stock, out- of-box,“as is” appliances and demo units.

How to receive service
To receive warranty services, the Purchaser must contact the Forno Support department in order to determine the problem and the required service procedures. Troubleshooting with a customer service representative will be necessary before moving forward with the service. Model number, serial number and date of original retail purchase will be requested.

Warranty Exclusions: What Is Not Covered

> Use of the Product in any non-residential, commercial application.
> Use of the Product for anything other than its intended purpose.
> Repair services provided by anyone other than a Forno Authorized Service agency.
> Damages or repair services to correct services provided by unauthorized parties or the use of unauthorized parts.
> Installation not in accordance with local/state/city/county fire codes, electrical codes, gas codes, plumbing codes, building codes, laws or regulations.
> Defects or damage due to improper storage of the Product.
> Defects,damage or missing parts on products sold out of the original factory packaging or from displays.
> Service calls or repairs to correct an incorrect installation of the Product and/or related accessories.
> Replacement of parts/service calls to connect, convert or otherwise repair the electrical wiring and/or gas line in order to properly use the product.
> Replacement of parts/service calls to provide instructions and information on the use of the Product.
> Replacement of parts/service calls to correct issues arising from the product being used in a manner other than what is normal and customary for residential use.
> Replacement of parts/service calls due to wear and tear of components such as seals, knobs, pan supports, shelving, cutlery baskets, buttons, touch displays, scratched or broken ceramic-glass tops.
> Replacement of parts/service calls for lack of/improper maintenance, including but not limited to: build up of residues, stains, scratches, discoloration, corrosion.
> Defects and damages arising from accidents, alteration, misuse, abuse or improper installation.
> Defects and damages arising from Product transport, logistics and handling. Inspection of the product must be made at time of delivery. Following receipt and inspection, the selling dealer/delivery company must be notified of any issues arising from handling, transport and logistics.
> Defects and damages arising from external forces beyond the control of Forno Appliances, including but not limited to wind, rain, sand, fires, floods, mudslides, freezing temperatures, excessive moisture or extended exposure to humidity, power surges, lightning, structural failures surrounding the appliance and other acts of God.
> Products whose serial number has been altered/damaged/tampered with. In no case shall Forno be held liable or responsible for damage to surrounding property, including furniture, cabinetry, flooring, panels, and other structures surrounding the Product. Forno is neither liable nor responsible for the Product if it is located in a remote area or an area where certified trained technicians are not reasonably available. Purchaser must bear any transportation and delivery costs of the Product to the nearest Authorized Service Center or the additional travel expenses of a certified trained technician

THERE ARE NO EXPRESS WARRANTIES OTHER THAN THOSE LISTED AND DESCRIBED ABOVE, AND NO WARRANTIES, EITHER EXPRESS OR IMPLIED, INCLUDING, BUT NOT LIMITED TO, ANY IMPLIED WARRANTIES OF MERCHANTABILITY OR FITNESS FOR A PARTICULAR PURPOSE THAT SHALL APPLY AFTER THE EXPRESS WARRANTY PERIODS STATED ABOVE, AND NO OTHER EXPRESS WARRANTY OR GUARANTEE GIVEN BY ANY PERSON, FIRM OR CORPORATION WITH RESPECT TO THIS PRODUCT SHALL BE BINDING ON FORNO. FORNO SHALL NOT BE LIABLE FOR LOSS OF REVENUE OR PROFITS, FAILURE TO REALIZE SAVINGS OR OTHER BENEFITS, TIME AWAY FROM WORK, MEALS, LOSS OF FOOD OR BEVERAGES, TRAVELING OR HOTEL EXPENSES, EXPENSES TO RENT OR PURCHASE APPLIANCES, REMODELING/CONSTRUCTION EXPENSES IN EXCESS OF DIRECT DAMAGES WHICH ARE UNDENIABLY CAUSED EXCLUSIVELY BY FORNO OR ANY OTHER SPECIAL, INCIDENTAL OR CONSEQUENTIAL DAMAGES CAUSED BY THE USE, MISUSE OR INABILITY TO USE THIS PRODUCT, REGARDLESS OF THE LEGAL THEORY ON WHICH THE CLAIM IS BASED, AND EVEN IF FORNO HAS BEEN ADVISED OF THE POSSIBILITY OF SUCH DAMAGES. NOR SHALL RECOVERY OF ANY KIND AGAINST FORNO BE GREATER IN AMOUNT THAN THE PURCHASE PRICE OF THE PRODUCT SOLD BY FORNO AND CAUSING THE ALLEGED DAMAGE.WITHOUT PREJUDICE TO THE FOREGOING, PURCHASER ASSUMES ALL RISK AND LIABILITY FOR LOSS, DAMAGE OR INJURY TO PURCHASER AND PURCHASER'S PROPERTY AND TO OTHERS AND THEIR PROPERTY ARISING FROM THE USE, MISUSE, OR INABILITY TO USE THIS PRODUCT SOLD BY FORNO THAT IS NOT A DIRECT RESULT OF NEGLIGENCE ON THE PART OF FORNO THIS LIMITED WARRANTY SHALL NOT EXTEND TO ANYONE OTHER THAN THE ORIGINAL PURCHASER OF THIS PRODUCT, IS NON-TRANSFERABLE, AND STATES YOUR EXCLUSIVE REMEDY.

Consumer information

Range Safety

Your safety and the safety of others are very important.

We have provided many important safety messages in this manual and on your appliance. Always read and obey all safety messages.

⚠	This is a safety alert symbol. It will alert you to potential personal or property safety hazards. Obey all safety messages to avoid any property damage, personal injury or death.
⚠WARNING	**WARNING** indicates a potentially hazardous situation which, if not avoided, could result in serious injury or death.
⚠CAUTION	**CAUTION** indicates a moderate hazardous situation which, if not avoided, could result in minor or moderate injury. All safety messages will alert you what the potential hazard is, tell you how to reduce the chance of injury, and let you know what can happen if the instructions are not followed.

⚠WARNING

If the information in this manual is not followed exactly, a fire or explosion may result, causing property damage, personal injury or death.

Do not store or use gasoline or other flammable vapors and liquids in the vicinity of this or any other appliance.

- WHAT TO DO IF YOU SMELL GAS

- Do not try to light any appliance.
- Do not touch any electrical switch.
- Do not use any phone in your building.
- Immediately call your gas supplier from a neighbor's phone. Follow the gas supplier's instructions.
- If you cannot reach your gas supplier, call the fire department.

Installation and service must be performed by a qualified installer, service agency or the gas supplier.

ANTI-TIP DEVICE

⚠WARNING

Tip-over Hazard

A Child or adult can tip the range which can result in serious injuries or death.
Install the anti-tip device to the range and/or structure per installation instructions.
Engage the range to the Anti-tip device installed to the structure.
Re-engage the anti-tip device if the range is removed.
Failure to follow these instructions can result in death or serious injuries and/or burns to children and adults.

To reduce the risk of tipping the range, the range must be secured by properly installed anti-tip device packed with the range. See installation instructions shipped with the bracket for complete details before attempting to install.

All ranges can tip and cause injuries.

Make sure the anti-tip bracket is installed

Slide range forward.

Make sure the anti-tip bracket is securely attached to the wall behind the range.

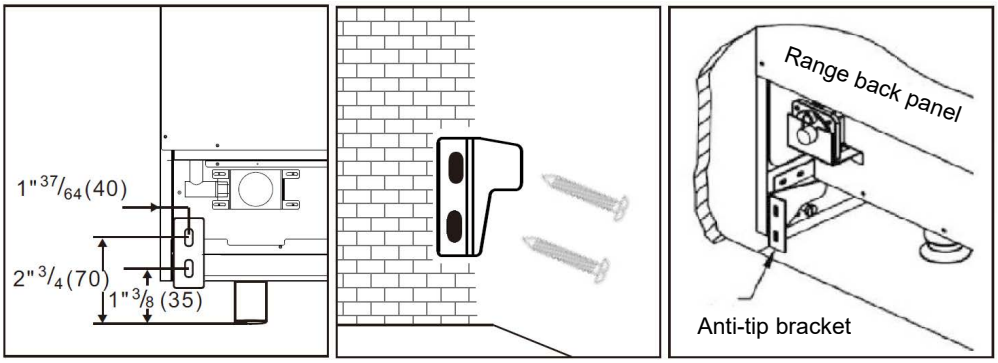

⚠ WARNING

This product can expose you to chemicals including carbon monoxide, which is known to the State of California to cause developmental harm.

For more information go to www.P65Warnings.ca.gov

The installation must conform with local codes or, in the absence of local codes, with the National Fuel Gas Code, ANSI Z223.1/NFPA 54 or, in Canada, the Natural Gas and Propane Installation Code, CSA B149.1.

⚠WARNING

Never operate the top surface cooking section of the appliance unattended
Failure to follow this warning statement may result in fire, explosion or burn hazard that could cause property damage, personal injury or death.
If a fire should occur, keep away from the appliance and immediately call your fire department.
DO NOT ATTEND TO EXTINGUISH AN OIL/GREASE FIRE WITH WATER

IMPORTANT SAFETY INFORMATION

READ ALL INSTRUCTIONS BEFORE USING THE APPLIANCE

⚠WARNING Read all safety instructions before using the product. Failure to follow these instructions may result in fire, electrical shock, serious injury or death.

GENERAL SAFETY INSTRUCTIONS

⚠WARNING NEVER use this appliance as a space heater to heat or warm the room. Doing so may result in carbon monoxide poisoning and overheating of the oven.

1. Use this range for its intended purpose as described in this instruction manual.
2. Have your range installed and properly grounded by a qualified installer in accordance with the provided installation instructions.

3. Any adjustment and service should be performed only by a qualified gas range installer or service technician. Do not attempt to repair or replace any part of your range unless it is specifically recommended in this manual.
4. Your range is shipped from the factory set for use with natural gas or propane (LP) gas. It can be converted for use with either. If required, these adjustments must be made by a qualified technician in accordance with the installation instructions and local codes. The agency performing this work assumes responsibility for the conversion.
5. Have the installer show you the location of the range gas shut-off valve and how to turn it off if necessary.
6. Plug your range into a 120-volt grounded outlet only. Do not removed the round grounding prong from the plug. If in doubt about the grounding of the home electrical system, it is your responsibility and obligation to have an ungrounded outlet in accordance with the National Electrical Code. Do not use an extension code with this range.
7. Before performing any service, unplug the range or disconnect the power supply at the household distribution panel by removing the fuse or switching off the circuit breaker.
8. Be sure all packing materials are removed from the range before operating to prevent ignition of these materials.
9. Avoid scratching or impacting glass displays. Doing so may lead to glass breakage. Do not cook on a product with broken glass. Shock, fire, or cuts may occur.
10. Do not leave children alone or unattended in an area where an appliance is in use. They should never be allowed to climb, sit or stand on any part of the range.

11. **⚠CAUTION** Do not store items of interest to children in cabinets above an oven-children who climb onto the oven to reach items could be seriously injured.
12. Never block the vents (air openings) of the range. They provide the air inlets and outlets that are necessary for the range to operate properly with correct combustion. Air openings are located at the rear of the cooktop, at the top and bottom of the oven door, and at the bottom of the range.
13. Use only dry pot holders--moist or damp pot holders on hot surfaces may result in burns from steam. Do not let pot holders touch surface burners, burner grate, or oven heating element. Do not use a towel or other bulky fabrics in place of pot holders.
14. Do not touch the heating elements or the interior surface of the oven. These surfaces may be hot enough to burn even though they are dark in color. During and after use, do not touch, or let clothing or other flammable materials contact any interior area of the oven; allow sufficient time for cooling first. Other surfaces of the appliance may become hot enough to cause burns. Potentially hot surfaces include the burners, grates, oven vent opening, surfaces near the opening, crevices around the oven door, metal trim parts above the door, any back guard, or high shelf surface.
15. Do not heat unopened food containers. Pressure could build up and the container could burst, causing any injury.

⚠WARNING **Extremely Heavy.**

Proper equipment and adequate manpower are needed when move the range to avoid personal injury or damage to the unit or the floor.
Failure to follow this advice may result in damage or personal injury.

⚠WARNING DO NOT carry or lift the cooking range by the oven door handle or the control panel!

CORRECT

INCORRECT

INCORRET

⚠WARNING Never pour cold water to hot surfaces in a hot oven. The steam created could cause serious burns or scalding and the sudden change in temperature can damage the enamel in the oven.

⚠WARNING Cook food thoroughly to help protect against foodborne illness. Minimum safe food temperature recommendations can be found at www.IsItDoneYet.gov and www.fsis.usda.gov. Use a food thermometer to take food temperatures and check several locations.

Do not allow anyone to climb, stand or hang on the oven door, drawer or cooktop. They could damage the range or tip it over causing severe injury or death.

Keep the ventilator hood and grease filter clean to maintain good venting and to avoid grease fires. Turn the ventilator OFF in case of a fire or when intentionally "flaming" liquor or other spirits on the cooktop. The blower if in operation, could spread the flames.

⚠WARNING KEEP FLAMMABLE MATERIAL AWAY FROM THE RANGE

Failure to do so may result in fire or personal injury.

Do not store or use flammable materials in an oven or near the cooktop, including paper, plastic, pot holders, linens, wall coverings, curtains, drapes and gasoline or other flammable vapors and liquids.

Never wear loose-fitting or hanging garments while using the appliance. These garments may ignite if they contact hot surfaces causing severe burns.

Do not let cooking grease or other flammable materials accumulate in or near the range. Grease in the oven or on the cooktop may ignite.

⚠WARNING IN THE EVENT OF A FIRE, TAKE THE FOLLOWING STEPS TO PREVENT INJURY AND FIRE SPREADING.

Do not use water on grease fires. Never pick up a flaming pan. Turn the controls off. Smother a flaming pan on a surface unit by covering the pan completely with a well-fitting lid, cookie sheet or flat tray. Use a multi-purpose dry chemical or foam-type fire extinguisher.

If there is a fire in the oven during baking, smother the fire by closing the oven door and turning the oven off or by using a multi-purpose dry chemical or foam-type fire extinguisher. If there is a fire in the oven during self-clean, turn the oven off and wait for the fire to go out. Do not force the door open.

Introduction of fresh air at self-clean temperatures may lead to a burst of flame from the oven. Failure to follow this instruction may result in severe burns.

⚠WARNING COOKTOP SAFETY INSTRUCTIONS

Never leave the surface burners unattended at medium or high heat settings. Foods, especially oily foods, may ignite resulting in fire that could spread to surrounding cabinets.
Never leave oil unattended while frying. If allowed to heat beyond its smoking point, oil may ignite resulting in fire that may spread to surrounding cabinets. Use a deep fat thermometer whenever possible to monitor oil temperature.
To avoid oil spillover and fire, use the minimum amount of oil when frying in a shallow pan and avoid cooking frozen foods with excessive amounts of ice.
Use proper pan size and avoid pans that are unstable or easily tipped. Select cookware that matches the size of the burner. Burner flames should be adjusted so that they do not extend beyond the bottom of the pan. Excessive flames may be hazardous.
When using glass/ceramic cookware, make sure it is suitable for cooktop use; others may break because of a sudden change in temperature.
To minimize the possibility of burns, ignition of flammable materials and spillage, cookware handles should be turned toward the center of the range without extending over nearby burners.
Do not use a wok with a round metal support ring. The ring may trap heat and block air to the burner resulting in a carbon monoxide hazard.
Do not attempt to lift the cooktop. Doing so may damage the gas tubing to the surface burners resulting in a gas leak and risk of fire.
Do not use aluminum foil to cover the grills or line any part of the cooktop. Doing so may result in carbon monoxide poisoning, overheating of the cooktop surfaces, or a potential fire hazard.

⚠WARNING OVEN SAFETY INSTRUCTIONS

NEVER cover any slots, holes, or passages in the oven bottom or cover an entire rack with materials such as aluminum foil or oven liners. Never place foil or oven liners on the oven bottom. They can heat causing risk of smoke or fire.
Stand away from the range when opening the oven door. Escaping hot air or steam can cause burns to hands, face and/or eyes.
Never place cooking utensils, pizza or baking stones, or any type of foil or liner on the oven floor. These items can trap heat or melt, resulting in damage to the product and risk of shock, smoke or fire.
Place oven racks in desired location while oven is cool. If the rack must be moved while the oven is hot, be careful to avoid touching hot surfaces.
Do not leave items such as paper, cooking utensils, or food in the oven when not in use. Items stored in an oven can ignite.
Do not leave items on the cooktop near the oven vent. Items may overheat resulting in a risk of fire or burns.
Never broil with the door open. Open-door broiling is not advised due to overheating of control knobs.

Features of Your Range

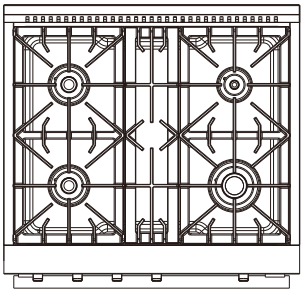

4 burners

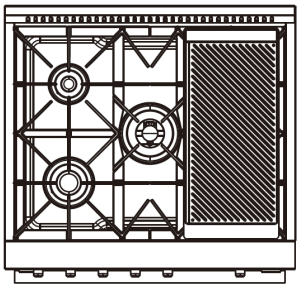

5 burners

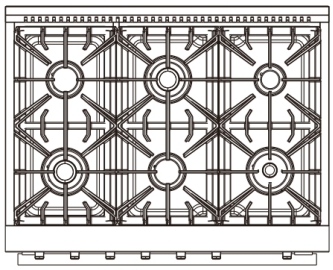

6 burners

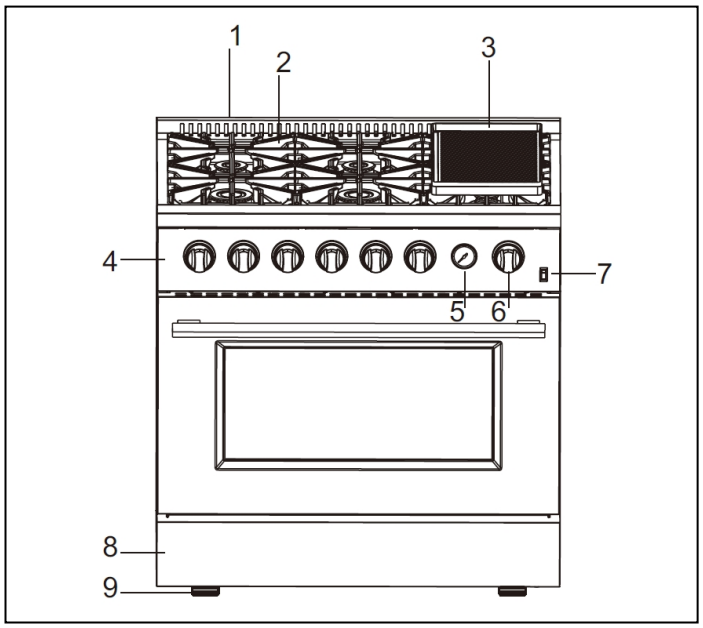

	Feature Index
1	Oven Vents
2	Cooktop Burner Grates
3	Griddle (on some models)
4	Control Panel
5	Temperature gauge
6	Temperature control knob
7	Oven Lights
8	Kick Panel
9	Leveling System

Not all features are on all models.Appearance may vary.

Installation Instructions

Before using your range

1. Remove all packaging material.
2. Check to make sure you have all of the accessories listed below

0.61, 0.93, 1.18, 0.94, 1.18, 0.9, 0.46	LPG injector	FFSGS6277-30 FFSGS6277-30BLK FFSGS6277-30WHT	6 sets
		FFSGS6274-30 FFSGS6274-30BLK FFSGS6274-30WHT	7 sets
		FFSGS6277-36 FFSGS6277-36BLK FFSGS6277-36WHT	8 sets
	Anti-tip bracket and screws		1 set
	Wall-against mat		2 pieces
	Burner Grills	FFSGS6277-30 FFSGS6277-30BLK FFSGS6277-30WHT	1 piece
	Burner Grills	FFSGS6274-30 FFSGS6274-30BLK FFSGS6274-30WHT	2 pieces
	Burner Grills	FFSGS6277-30 FFSGS6277-30BLK FFSGS6277-30WHT	2 pieces
		FFSGS6277-36 FFSGS6277-36BLK FFSGS6277-36WHT	3 pieces
	Cook plate (Griddle)	FFSGS6274-30 FFSGS6274-30BLK FFSGS6274-30WHT	1 piece
	Wok rack	FFSGS6274-30 FFSGS6274-30BLK FFSGS6274-30WHT	1 piece
	Oven door handle		1 piece
	Burner & Cap (4000BTU)	FFSGS6277-30 FFSGS6277-30BLK FFSGS6277-30WHT	1 set
		FFSGS6277-36 FFSGS6277-36BLK FFSGS6277-36WHT	1 set
	Burner & Cap (9000BTU)	FFSGS6277-30 FFSGS6277-30BLK FFSGS6277-30WHT	2 sets
		FFSGS6274-30 FFSGS6274-30BLK FFSGS6274-30WHT	2 sets
		FFSGS6277-36 FFSGS6277-36BLK FFSGS6277-36WHT	2 sets
	Burner & Cap (15000BTU)	FFSGS6277-30 FFSGS6277-30BLK FFSGS6277-30WHT	1 set
		FFSGS6274-30 FFSGS6274-30BLK FFSGS6274-30WHT	2 sets
		FFSGS6277-36 FFSGS6277-36BLK FFSGS6277-36WHT	3 sets
	Burner & Cap (19000BTU)	FFSGS6274-30 FFSGS6274-30BLK FFSGS6274-30WHT	1 set
	Knob	FFSGS6277-30 FFSGS6277-30BLK FFSGS6277-30WHT	5 sets
		FFSGS6274-30 FFSGS6274-30BLK FFSGS6274-30WHT	6 sets
	Air fry Basket Baking Pan	FFSGS6274-30 FFSGS6274-30BLK FFSGS6274-30WHT	1 set

	Baking rack	2 pieces
	Regulator (pre-installed)	1 piece
	Serial Number Sticker & Instruction Manual	1 set

You Need Tooles For Installation. (not supplied with the range)

Screwdriver	Wrench	Socket wrench	Allen key	Tape measure &Pencil
Protective gloves	Hammer	Adjustable wrench	Adjustable pliers	Drill

Door Handle Installations

The door handle is not pre-installed. Follow the illustrations below to install the door handle quickly and easily.

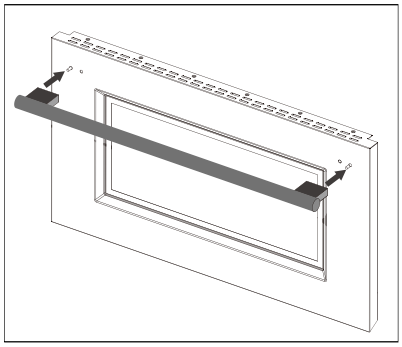

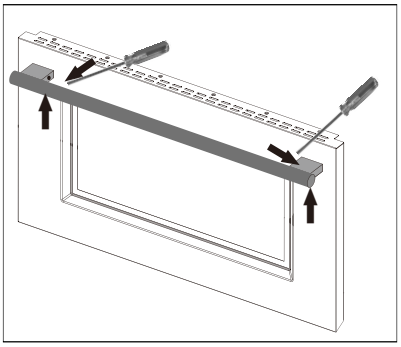

1.Align the handle with the screw on the door.

2.Then tighten the hexagon socket screws on the handle with a hexagon socket screwdriver.

Oven Racks Installation

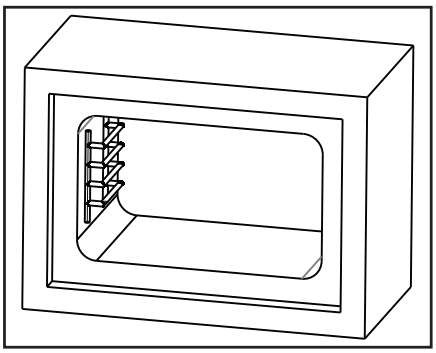

1-Open the oven door

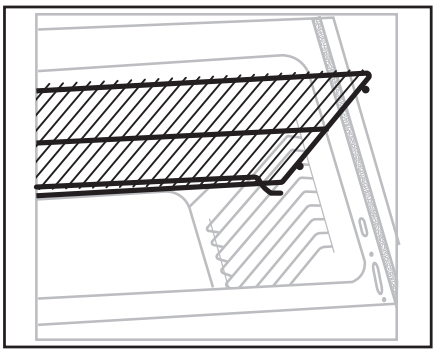

2- Put the baking rack to the center position of the side rack. Raise the baking rack a little bit so that the steel ball can cross the side rack.

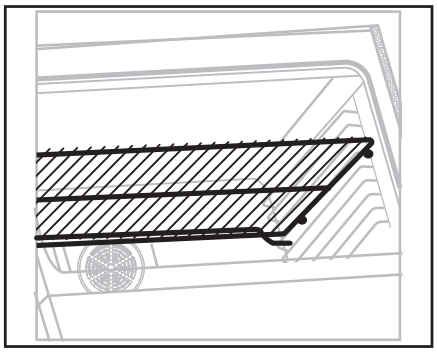

3- Push the baking rack smoothly all the way into the oven cavity.

Electrical

Your range must be electrically grounded in accordance with local codes or, in the absence of local codes, in accordance with the National Electrical Code (ANSI/NFPA 70, latest edition). In Canada, electrical grounding must be in accordance with the current CSA C22.1 Canadian Electrical Code Part 1 and/or local codes.

The power supply must be the correct polarity. Reverse polarity will result in continuous sparking of the electrodes, even after flame ignition. If there is any doubt as to whether the power supply has the correct polarity or grounded, have it checked by a qualified electrician.

Electtrical Requirements

Electrical Supply	Grounded, 110/120 VAC, 60Hz
Service	15 amp or 20 amp dedicated circuit
Receptacle	3-prong grounding-type
PowerCord	5' (1.3 m)

⚠WARNING

Electrical Grounding Instructions: this cooking range is equipped with a three-prong (grounding) plug for your protection against shock hazard and should be plugged directly into a properly grounded three-pronged receptacle.

Do Not cut or removes the grounding prong from the plug.

⚠CAUTION Label all wires prior to disconnection when servicing controls. Wiring errors can cause improper and dangerous operation. Verify proper operation after servicing.

Grounding

The power cord is equipped with a three-prong (grounding) plug which mates with a standard three-prong grounding wall receptacle to minimize the possibility of electrical shock hazard from the range.

All cord connected appliance shall include instructions relative to location of the wall receptacle and a warning to the user to disconnect the electrical supply before serving the appliance.

Where a standard two-prong wall receptacle is encountered, it is the responsibility and obligation of the customer to have it replaced with a properly grounded three-prong wall receptacle. Do not cut or remove the grounding prong from the power cord.

Gas Supply

Installation must comply with local codes or, in the absence of local codes, with the National Fuel Gas Code, ANSI Z223.1 / NFPA 54. In Canada, installation must conform to the current natural Gas Installation /code, CAN 1-1.1-M81 and with local codes where applicable.

This range has been design-certified according to ANSI Z21.1b-2012 latest edition.

GAS REQUIREMENTS

NATURAL GAS	WC
Regulator Pressure	5" (12.5 mb)
Minimum Supply Pressure	6"
Maximum Supply Pressure	14" (34.9 mb), 0.5 psi (3.5 kPa)

LP GAS	WC
Regulator Pressure	10" (25 mb)
Minimum Supply Pressure	11"
Maximum Supply Pressure	14" (34.9 mb), 0.5 psi (3.5 kPa)

The min and max gas supply pressure stands for the pressure at the Gas Shut-Off Valve.

⚠WARNING Do not obstruct the flow of combustion air into the range and ventilation air away from the range.

Ventilation: it is recommended that the unit be operated with an oven head, vented exhaust hood of sufficient size and capacity.

Electric Power Supply Requirements

Your unit is equipped with a small cavity located at the lower back, which is specifically designed to accommodate all your electric and gas requirements for a seamless flush-to-wall installation. It is important to ensure that all components are positioned below the measurements provided below.

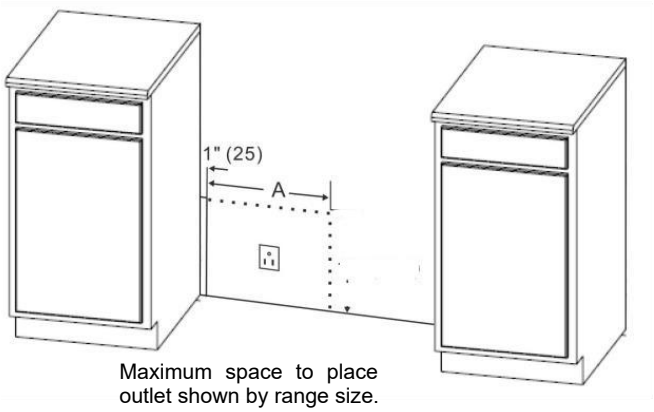

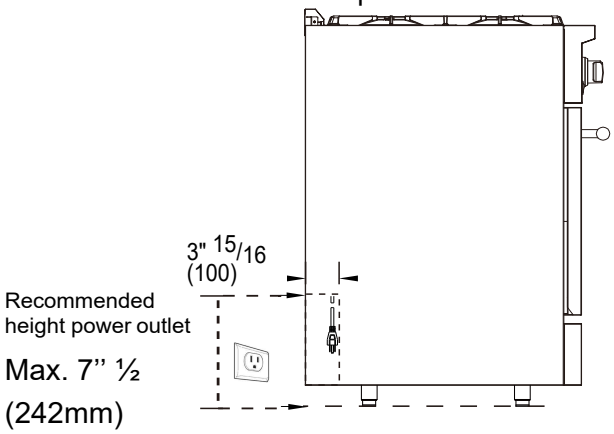

	30 inch	36 inch
A	23" (584)	28" (715)

⚠WARNING Please note that the maximum height may vary if you adjust the height of the unit's legs. For accurate measurements, we recommend referring to the actual object rather than relying solely on reference materials.

Pressure Regulator

Since service pressure may fluctuate with local demand, every gas cooking range must be equipped with a pressure regulator on the incoming service line for safe and efficient operation.
The pressure regulator preinstalled on the range has a gas inlet of 1/2" NPT for the 30", 36" .
Pressure regulator can withstand a maximum input pressure of 0.5 psi (3.5 kPa), and is set at 5" WC outlet pressure when used on NATURAL GAS and 10" WC outlet pressure when used on Liquid Propane.

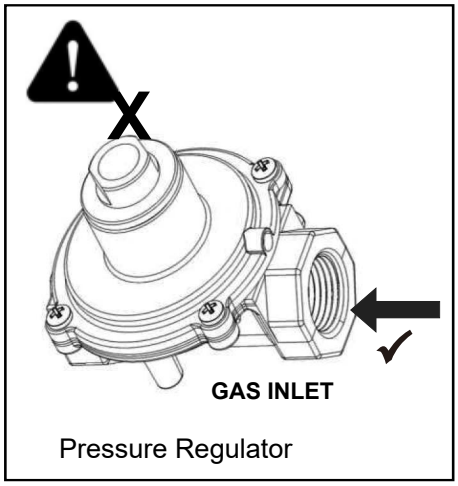

Pressure Regulator

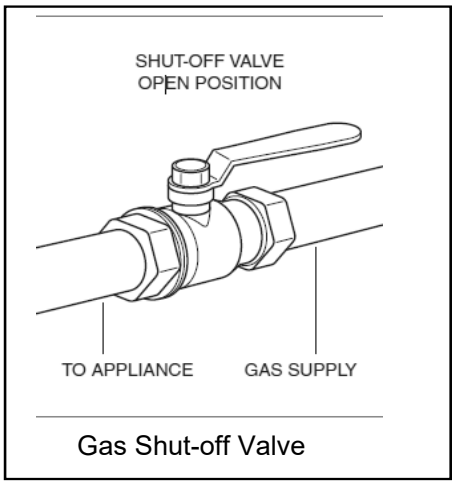

Gas Shut-off Valve

Gas Shut-off Valve (not included)

The supply line must be equipped with an approved external gas shut-off valve located near the range in an accessible location. Do not block access to the shut-off valve. Refer to the illustration below.
A 3/4" (19 mm) ID gas supply line must be connected to the range. If local codes permit, a certified, 3' (.9 m) long, 1/2" (13 mm) ID flexible metal gas line is recommended to connect the unit's 1/2" NPT 30", 36" female inlet to the gas supply line. Pipe joint compounds suitable for use with natural or LP gas should be used.
The appliance and its shut-off valve must be disconnected from the gas supply piping system during must be isolated from the gas supply piping system by closing its individual manual shutoff valve during any pressure testing of the system at test pressures equal to or less than 0.5 psi (3.5 kPa).

Product Dimensions and Cabinets

Model:
FFSGS6277-30 FFSGS6277-30BLK
FFSGS6277-30WHT

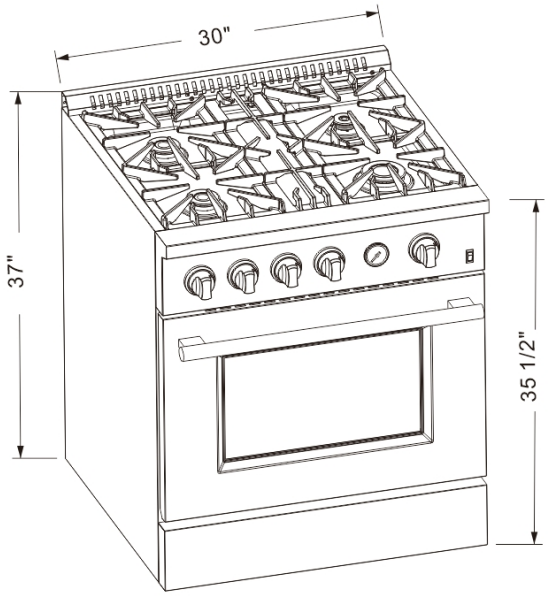

Model:
FFSGS6274-30 FFSGS6274-30BLK
FFSGS6274-30WHT

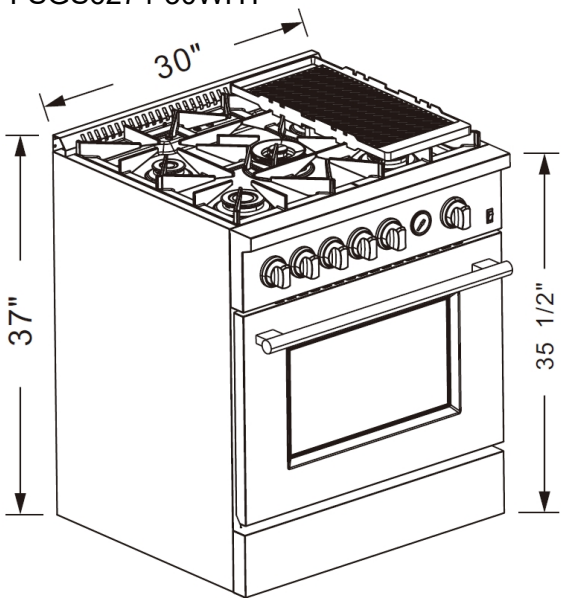

Model:
FFSGS6277-36
FFSGS6277-36BLK
FFSGS6277-36WHT

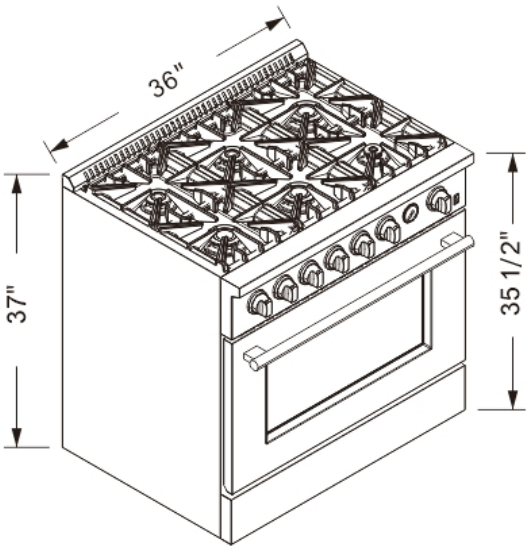

This range may be installed directly adjacent to existing countertop-height cabinets (36" or 91.5 cm from the floor).To achieve the best look, the cooktop should be level with the cabinet countertop. This can be accomplished by raising the unit using the adjustment spindles on the legs.

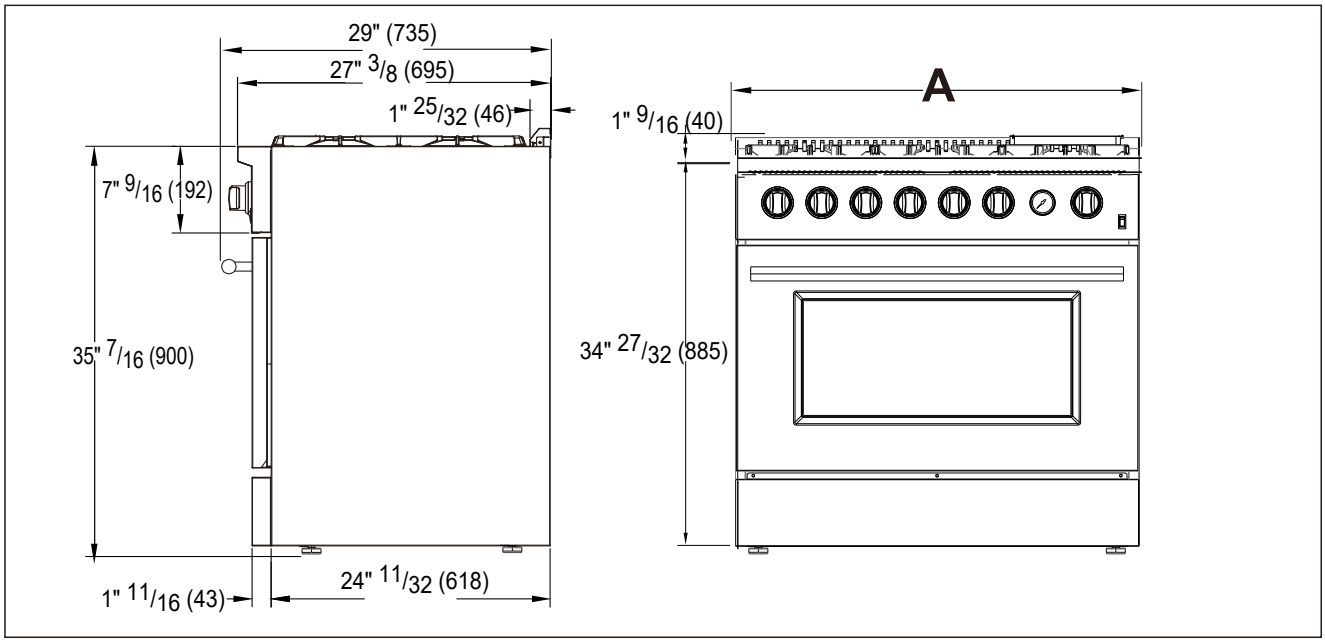

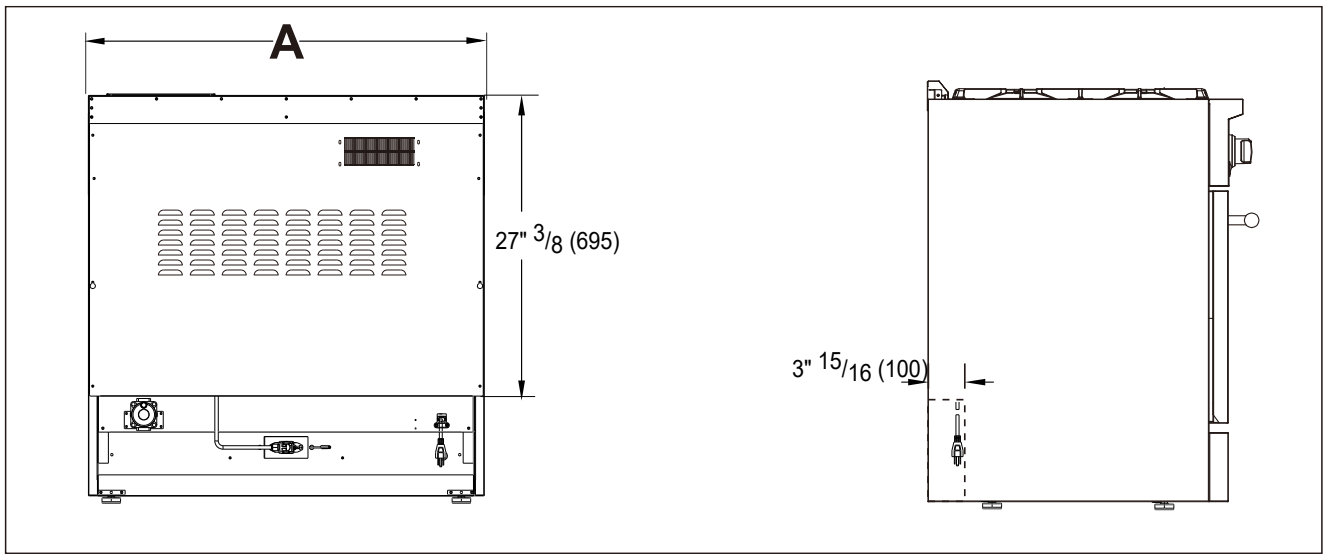

Wall-against mat

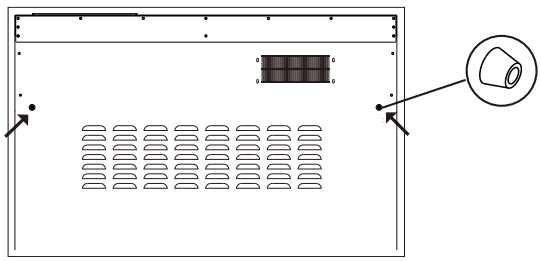

1/ Remove the two screws in the back of the range.
2/ Install the wall-against mat instead.

	30 inch	36 inch
A	30"(763)	36"(915)

Model:FFSGS6277-30 FFSGS6277-30BLK FFSGS6277-30WHT
FFSGS6274-30 FFSGS6274-30BLK FFSGS6274-30WHT

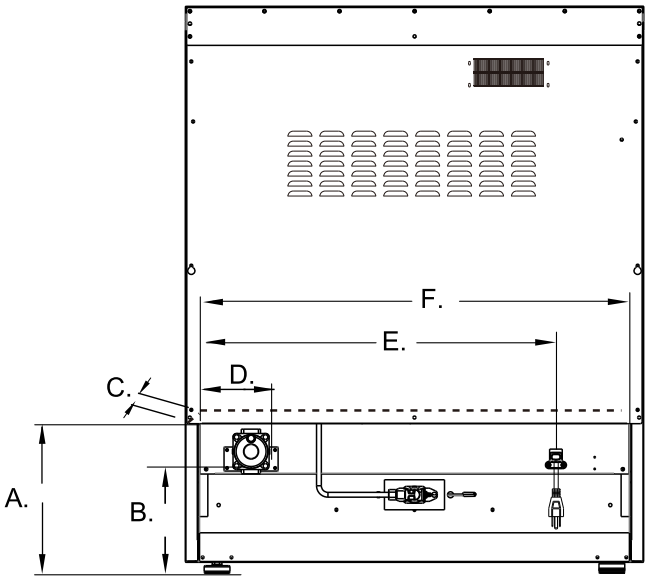

A.	B.	C.	D.	E.	F.
9'' 27/32 (250mm)	6'' 7/8 (175mm)	3''15/16 (100mm)	5'' 32/15 (139mm)	23'' 27/64 (595mm)	28'' 32/15 (723mm)

Model:FFSGS6277-36 FFSGS6277-36BLK FFSGS6277-36WHT

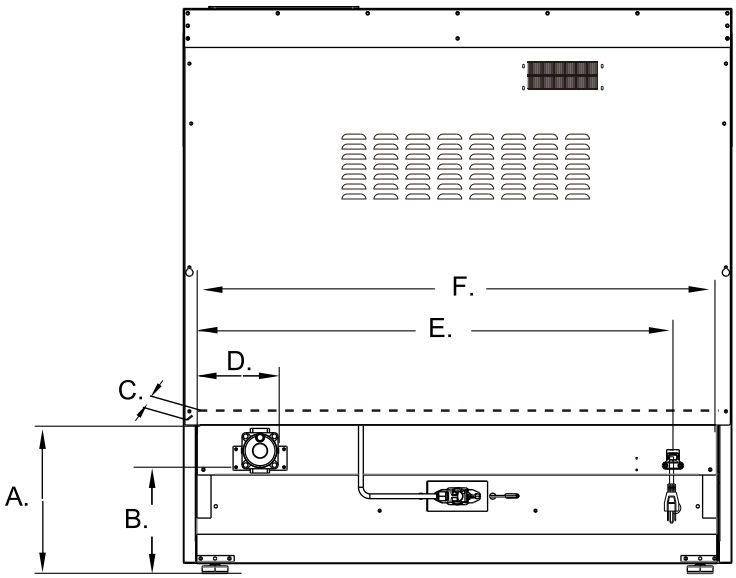

A.	B.	C.	D.	E.	F.
9'' 27/32 (250mm)	6'' 7/8 (175mm)	3''15/16 (100mm)	6'' (157mm)	31'' (793mm)	34'' 29/64 (875mm)

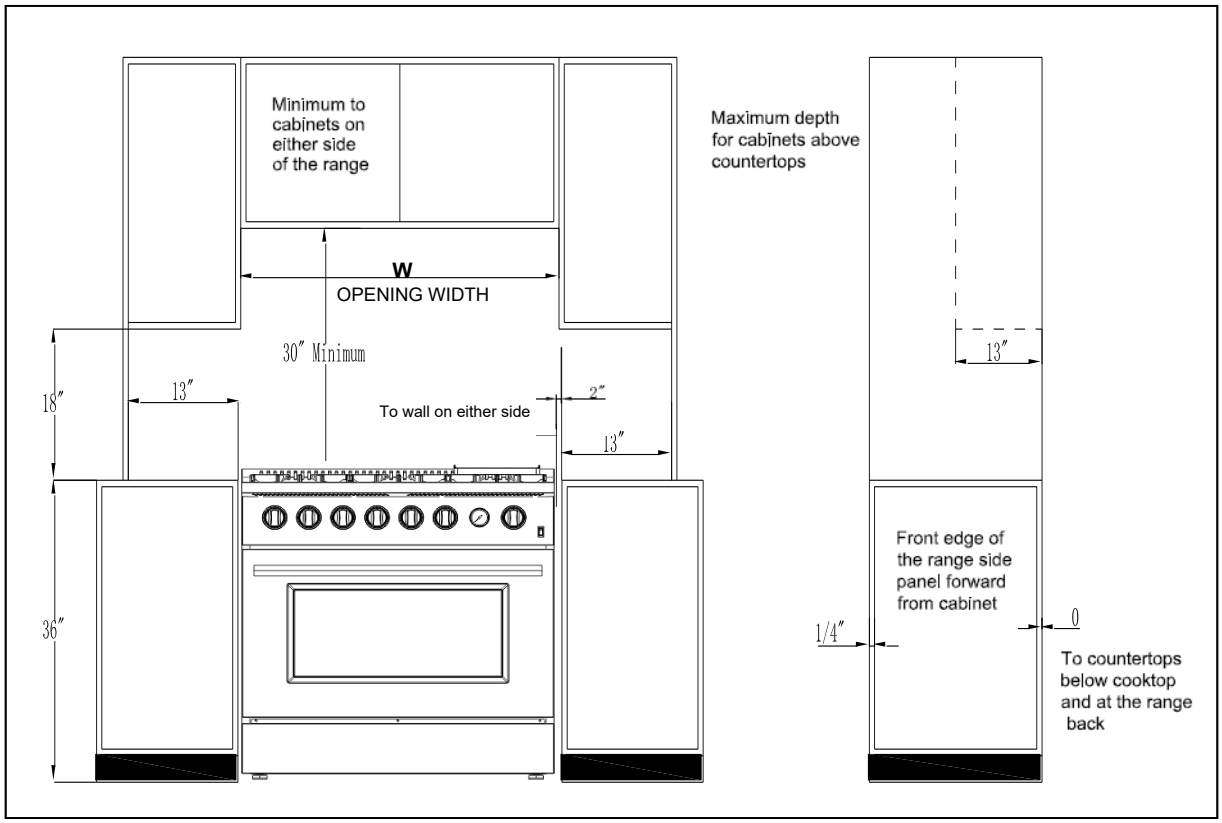

OPENING WIDTH	W
30" Model	30" (762)
36" Model	36" (914)

Exhaust Hood Installation

The bottom of the hood should be 30" min. to 36" above the countertop. This would typically result in the bottom of the hood being 66" to 72" above the floor. These dimensions provide safe and efficient operation of the hood.

After Installation:

1. Check ignition of cooktop burners.
2. Check the air shutter adjustment – sharp blue flame, with no yellow tipping or lifting flames.
3. Check ignition of oven burner.
4. Visually check tubular burner (oven burner) re-ignition to be sure both rows of burner ports are relighting each time.
5. Check for gas leaks at all gas connections (using a gas detector, never a flame).
6. Check oven bake and convection bake function.

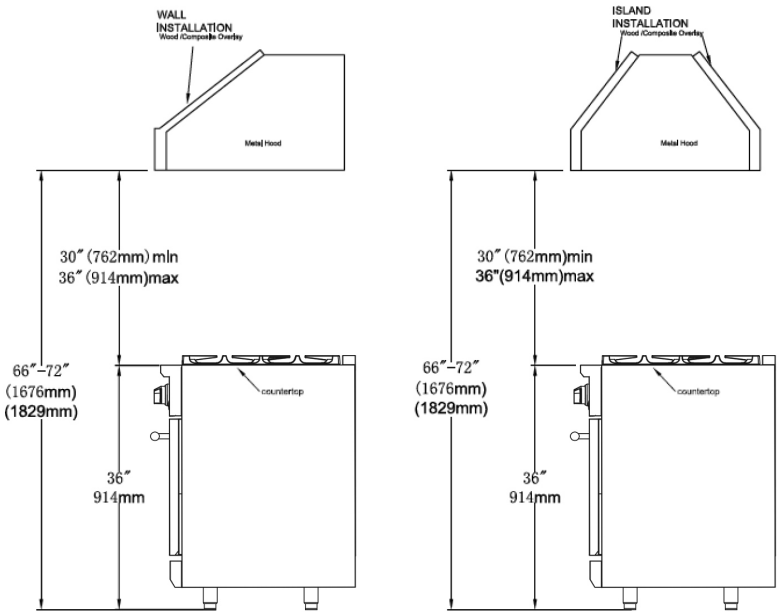

Gas Conversion Operation

This cooking range can be used with LP gas and NG gas. It is shipped from the factory adjusted for use with NG(Nature Gas). Conversion nozzles are included. Follow the instruction shown below for gas conversion.

⚠WARNING Gas conversion shall be conducted by a trained professional. Contact a local professional to complete this procedure. If this procedure isn't completed by a professional, the warranty can be voided. Forno has the right to ask for a proof (invoice from the professional) when there is signs of an improper conversion.

⚠WARNING Before carrying out this operation, disconnect the range from gas and electricity. Fail to do so, may result in fire, or electrical shock hazard can occur and result in injury or death. Do not remove regulator or allow it to turn during servicing.

The gas conversion procedure for this range includes 8 steps:

1. Pressure regulator
2. Cooktop burners
3. Oven burner
4. Broil burner
5. Gas valves
6. Reconnect Gas and Electrical Supply
7. Installation of new rating label

The conversion is not completed if all 8 steps have not been concluded properly.
Before performing the gas conversion, locate the package containing the replacement nozzles shipped with every range.

STEP 1: Pressure Regulator
To access the gas regulator, pull the range away from the cabinet wall. The gas regulator is located at the bottom back left corner of the range.

⚠WARNING Electrical shock hazard can occur and result in injury or death. Disconnect electrical power to the range before servicing. Do not remove regulator or allow it to turn during servicing.

a. Unscrew the cap from the regulator.

b. Unscrew the brass insert from the cap. Do not remove the spring from the brass insert. Rotate the brass insert with the fully extended spring 180° and screw back the brass insert on the cap. Insert the cap with the spring first into the regulator. Make sure the cap is fully tighten on the regulator, if not done correctly a gas leak can occur.

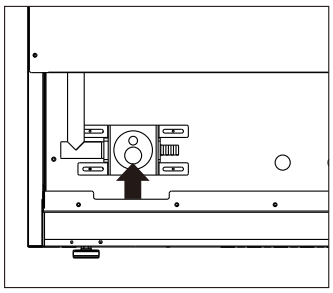

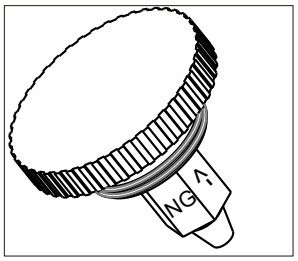

Position NG

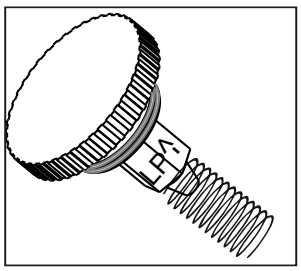

Position LP

STEP 2: Surface Burners
2.1)Remove cooking grates and burner caps.
2.2)Lift off burner spreader.
2.3)Remove the factory installed natural gas injector from the nozzle holders by using a 7mm socket wrench.
2.4)Replace the LP injector in each nozzle holder. Tighten each injector properly. **Do not to over tighten the injector.**
2.5)Place the burner spreader and caps back to correct position. Put back the cooking grates.

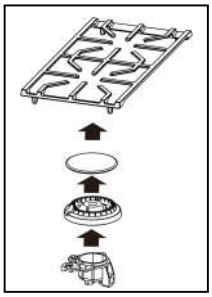

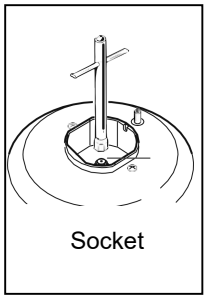

⚠CAUTION **Handle carefully when removing and replacing gas components. Use proper support to prevent damage to components.**

IMPORTANT: Each injector has a number indicating its flow diameter, the number is printed on the body. Consult the table below for matching nozzles with surface burners.

	COOKTOP BURNERS			
ORIFICE FOR NATURAL GAS (NG) & LIQUID PROPANE (LP)	**A. 4,000BTU**	**B.9,000BTU**	**C.15,000BTU**	**D.19,000BTU**
NG	0.9	1.35	1.8	1.38 x 2 (OUTER) 0.75 x 1 (CENTER)
LP	0.61	0.9	1.18	0.86 x 2 (OUTER) 0.46 x 1 (CENTER)

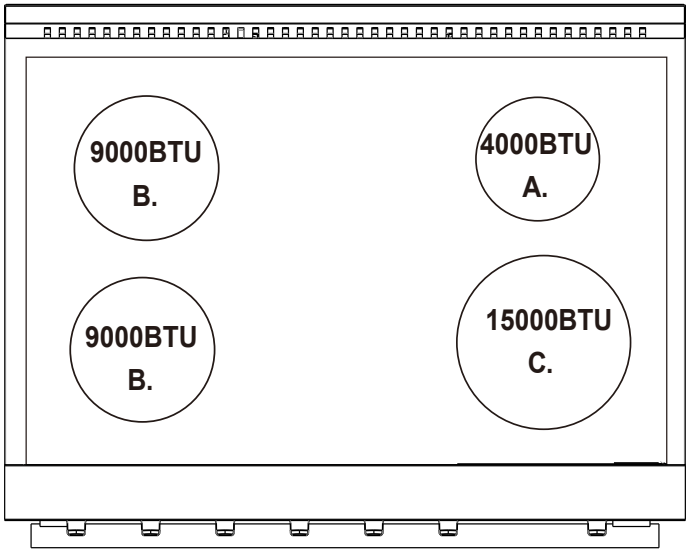

Model:FFSGS6277-30 FFSGS6277-30BLK FFSGS6277-30WHT

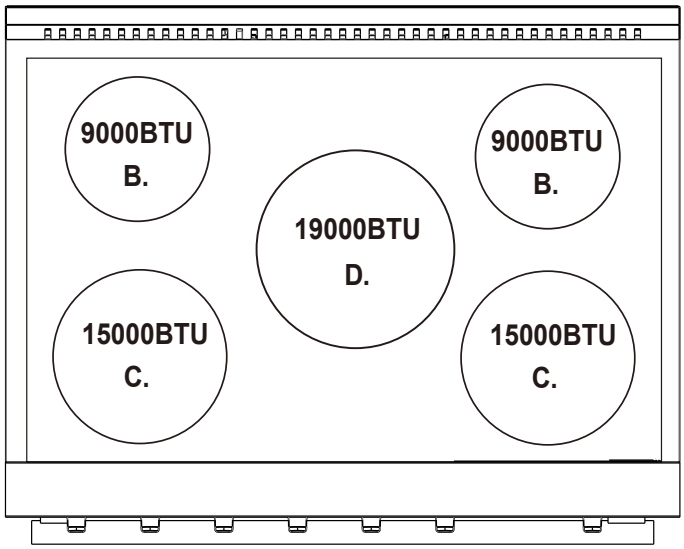

Model:FFSGS6274-30 FFSGS6274-30BLK FFSGS6274-30WHT

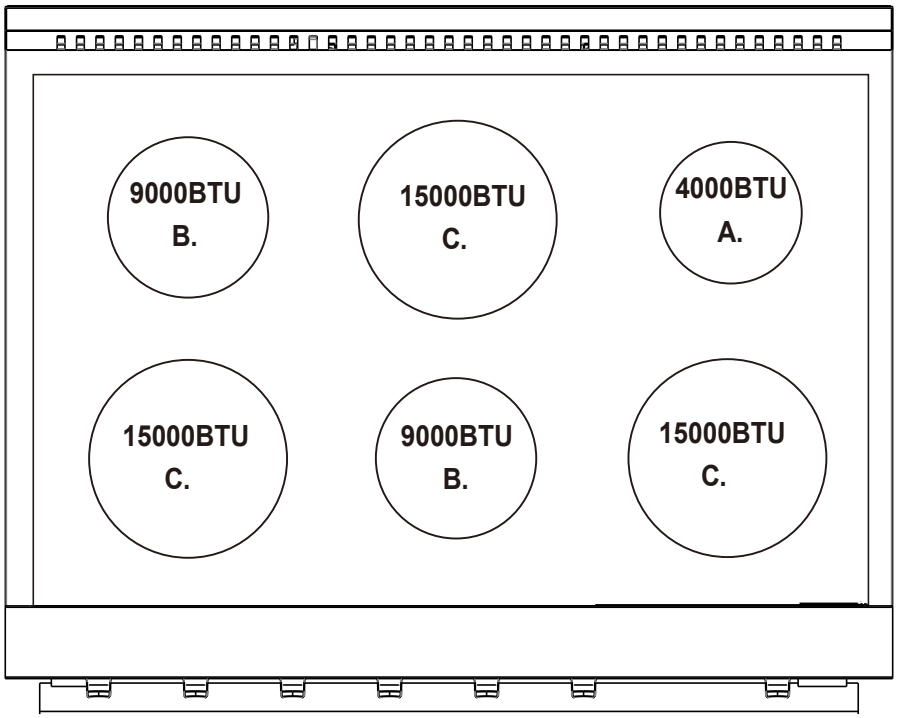

Model:FFSGS6277-36 FFSGS6277-36BLK FFSGS6277-36WHT

IMPORTANT: Save the nozzles removed from the range for future use.

STEP 3: Oven Burner

The nozzle of the oven burner locates in the bottom rear of the cooking range.

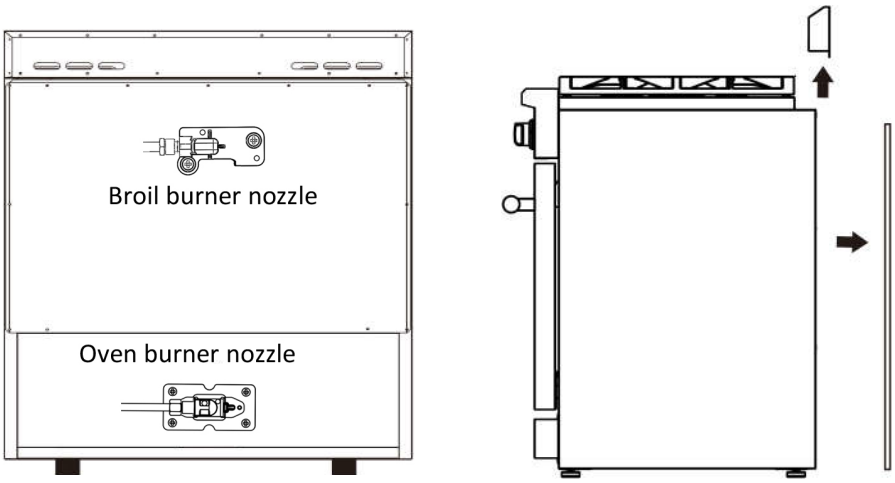

3.1)Pull the unit out of its place.

3.2)Disassemble the oven vent and back plate.

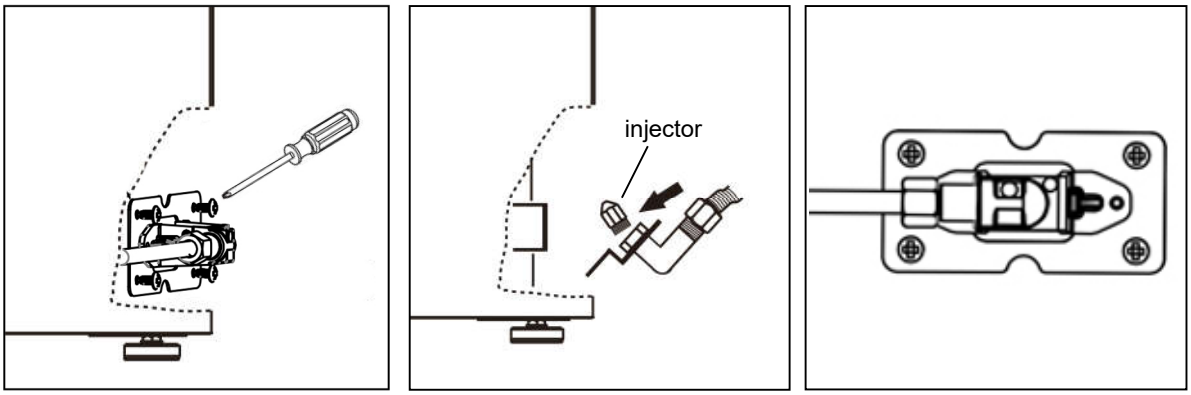

3.3) Remove 2 screws, loosen the bracket to access the injector. Replace the injector and tighten. Aligning the new injector with the air shutter.
3.4) Assemble the bracket back to place.

Injector diameter for oven bottom burners:

Modelo	FFSGS6277-30 FFSGS6277-30BLK FFSGS6277-30WHT	FFSGS6274-30 FFSGS6274-30BLK FFSGS6274-30WHT	FFSGS6277-36 FFSGS6277-36BLK FFSGS6277-36WHT
GN	1.9	1.9	1.9
PGL	1.18	1.18	1.18

STEP 4: Broil Burner (oven top burner)
Broil burner nozzle locates in the middle top of cooking range back. Pull the unit out of its place. Take out the oven vent and back plate.

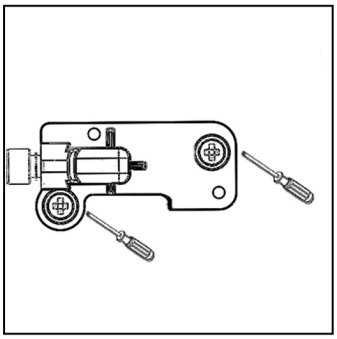
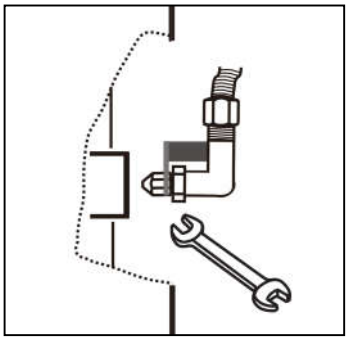
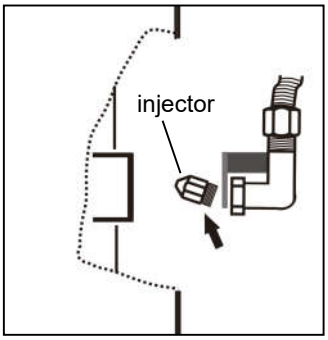

4.1)Remove 2 screws to loosen injector bracket.
4.2)Use open wrench to remove the gas line from the injector holder. Replace the broil burner injector from the orifice holder.
4.3)Assemble the bracket back to place.

Injector diameter for oven broil burners:

Modelo	FFSGS6277-30 FFSGS6277-30BLK FFSGS6277-30WHT	FFSGS6274-30 FFSGS6274-30BLK FFSGS6274-30WHT	FFSGS6277-36 FFSGS6277-36BLK FFSGS6277-36WHT
GN	1.43	1.43	1.43
PGL	0.94	0.94	0.94

IMPORTANT: Keep the injectors removed from the range for future use.

STEP 5: Gas Valve

1. Remove the knob and knob ring.
2. Locate the bypass screw (see illustration).
3. Insert the flat head screwdriver into the hole to get the bypass screw, and turn the bypass screw clockwise to adjust the flame.

DO NOT OVERTIGHTEN.

4. Replace the knob ring and knob.
5. Repeat for each of the other burners.

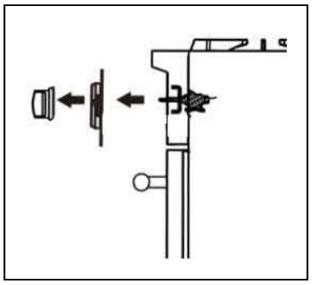
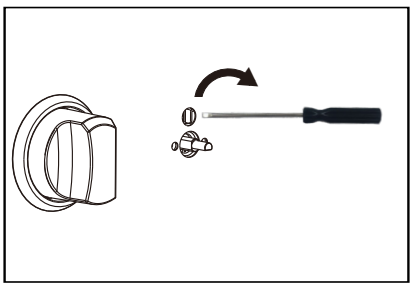

STEP 6: Reconnect Gas and Electrical Supply

Leak testing of the range shall be conducted according to the installation instructions provided with the range.

Before operating the range after the gas conversion, always check for leaks with a soapy water solution or other acceptable method in at gas connections installed between the gas inlet pipe of the range, gas regulator, and the manual shut-off valve.

Use soapy solutions to check for leakage on all joints.

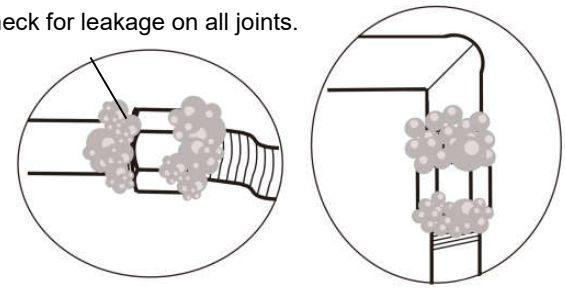

⚠WARNING **DO NOT use a flame to check for gas leaks!**

STEP 7: Installation of New Rating Label

Record the model and serial number on the LP / Propane Rating serial plate provided in this kit. The information can be obtained from the existing Rating / Serial plate. Place the new plate as close as possible to the existing Rating / Serial plate on the range.

Preparation

Before moving the range, protect any finished flooring and secure oven door(s) closed to prevent damage.

The oven door(s) can be removed to lighten the load or to fit the unit through a doorway. Only remove if necessary. Do not remove the griddle or any other component. Door removal should only be done by a certified installer or service technician.

Placement

Do not lift or carry the oven door by the door handle.

Use an appliance dolly to move the range near the opening. Remove and recycle packing materials. Do not discard the anti-tip bracket supplied with the range.

Leveling

Raise the range to the desired height by adjusting the legs. The legs can be adjusted by rotating the metal leg leg clockwise to raise and counter clockwise to lower.

Anti-Tip Bracket

To prevent the range from tipping forward, the anti-tip bracket must be installed. Refer to the illustration on page 5.

Gas Supply Connection

All connections to the gas piping must be wrench-tightened. Do not overtighten or allow pipes to turn when tightening.

When all connections have been made, check that all range controls are in the “OFF” position and turn on the main gas supply valve.

If a flexible metal connector is being used, verify it is not kinked, then attach the gas supply line to the regulator on the range. Open the valve and check for leaks by placing a liquid detergent solution onto all gas connections. Bubbles around connections indicate a gas leak. If a leak appears, close the shut-off valve and adjust connections.

Leak testing of the appliance shall be conducted according to the manufacture’s instructions .Use some soap water (50% water and 50% soap) or a leak detector at all joints and connections to check for leaks in the system. Do not use a flame to check for gas leaks.

The appliance must be isolated from the building’s gas supply piping system by closing its individual manual shut-off valve during any pressure testing of the gas supply piping system at test pressure equal to or less than 0.5 psi (3.5kPa).

Getting Started

Before you start cooking, please take the following steps.

- Remove the exterior and interior packing.
- Remove the protective film on steel and aluminum parts.
- Clean the range thoroughly with hot water and a mild detergent. Rinse and dry with a soft cloth to remove any residual oil and grease left over from the manufacturing process.
- Check that surface burner components are assembled correctly.
- Furnish the interior of the oven by inserting the shelves and tray.

Cooktop Operation

The burner design combines all burner parts in one assembly. The burner cap must be seated horizontally on the burner. Refer to the illustration.

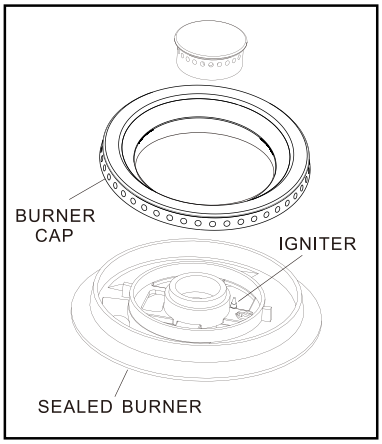

Ignition

To light the cooktop burners, push and turn the appropriate control knob counter clockwise to a “Hi” position. You will hear a clicking noise –the sound of the electric spark igniting the burner.
Once burner ignition has been achieved, turn the burner control knob to adjust the flame size. If the knob stays at “Hi”, it will continue to click.
NOTE: When one burner is turned to the “Hi” position, all the burners will spark. Do not attempt to disassemble or clean around any burner while another burner is on. Do not touch any burner cap, burner base, or igniter while the igniters are sparking.

Heat Settings:

Hi	Ignites the burners.
Simmer	Melting small quantities, steaming rice, warming food, melting chocolate or butter.
Low	Melting large quantities.
Low-Medium	Low-temperature frying, simmering large quantities, heating milk, cream sauces, gravies.
Medium	Sautéing and browning, braising, pan-frying, maintaining slow boil on large quantities.
Medium-Hi	High-temperature frying, pan boiling, maintaining slow boil on large quantities.
Hi	Boiling liquid quickly, deep frying.

⚠CAUTION Never leave pans on a high setting unattended. Be careful when cooking food in fat or grease; it can become hot enough to ignite.

Simmer and Boil

A smaller flame will give the best results when simmering. Small flames offer precise cooking performance for delicate foods, keeping food warm, melting chocolate or butter, and for cooking over low heat for long period of time.
The highest (larger) flame settings provide the maximum heat that is available on your range. This setting should be used for heavy cooking jobs such as boiling water and cooking pasts.
Please Note: Only the 19,000BTU burner can reach a simmer flame to the minimum setting.

Flame Size

- When you select the flame size, watch the flame when you turn the knob.
- Any flame larger than the bottom of the cookware is wasted.
- The flame should be steady and blue in color. Foreign material in the gas line may cause an orange flame during initial operation.

Power Failure

- If the gas does not ignite within four seconds, turn off the valve and allow at least five minutes for any gas to dissipate. Repeat the lighting procedure.
- In the event of a power failure, the surface burners can be lighted manually. Hold a lighted match near a burner and turn the knob counter-clockwise to “HI”. After burner lights, turn knob to the desired setting.

Burner Grates

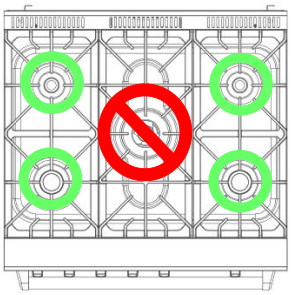

1. The grills must be properly positioned before cooking. Improper installation of the grills may result in scratching of the cooktop and / or poor combustion.
2. Do not operate the burners without a pan or utensil on the grills.

Griddle Operation (available on the FFSGS6274-30

FFSGS6274-30BLK FFSGS6274-30WHTmodel)

Before Using the Griddle

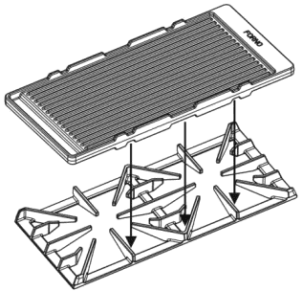

1. Clean the griddle thoroughly with warm, soapy water to remove dust or any protective coating.
2. Rinse with clean water and wipe off to dry with soft, clean lint-free towel/cloth.
3. If you're using the griddle to cook at the maximum position, you may notice that the 19,000 BTU burner keeps clicking. To prevent this from happening, try adjusting the fire to a lower position. This should eliminate the issue.

Use of the Cook plate (Griddle)

Your **FORNO** range may have come with a standard reversible grill/griddle. For best use and results please read below.

Pre-heat gently - Because the FORNO grill/griddle is so large it can take time for it to heat evenly. Once it's up to temp it will stay there for a long time! We recommend starting with your range set to low heat and gradually increasing the heat until you get to your target temp. It's easier to make a grill hotter once it's already warmed up, by pre-heating slowly you can control the heat more easily. To be efficient with your time you can start the pre-heating process while you're getting your ingredients together. It typically takes 10-15 minutes to completely pre-heat the FORNO grill/griddle this when pre-heating in this manner. Then enjoy your cooking experience on the FORNO grill/griddle.

Start low and don't overheat! - You might get the urge to turn your burners up to full blast the first time you use the FORNO grill/griddle, but don't! Burners only need to be set to 1/3 to 1/2 power to heat the grill/griddle to over 500 degrees. Most chefs agree that the maximum cooking temperature you'll ever need is 500-550 degrees for searing a steak.

⚠CAUTION The surface of griddle and grills are hot after use. Please allow sufficient time for the griddle to cool before cleaning.

Air Fryer

To cook your food to the perfect crispy-golden results, please follow the next steps:

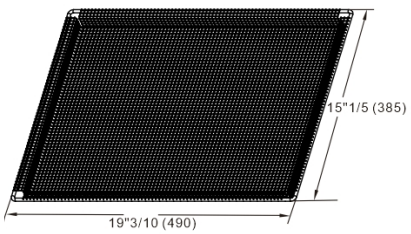

Air Fry Basket

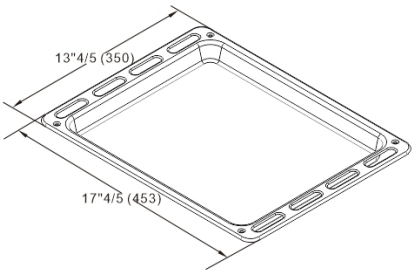

Baking pan

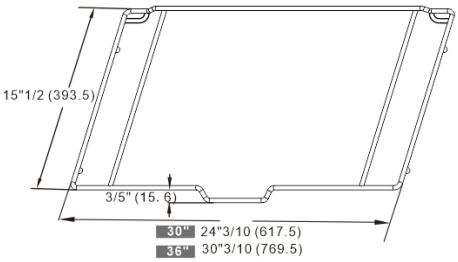

Air Fry Rack

Step 1: Move 1 oven rack to the lowest position to hold the baking pan.
Step 2: Place the baking pan on the bottom rack.
Step 3: Put your food onto the air fry basket and spread it evenly in a single layer.
Step 4: Place the air fry basket, filled with your food on the air fry rack, and insert them inthe middle position of the oven shelf, then close the door.
Step 5: Turn on the convection fan and set theoven temperature between 325 ℉ and 350 ℉, and watch closely to the cooking food.

Tips:

1. Air Fry cooking requires little to no oil.
2. High-fat foods such as skin-on chicken wings, bacon or sausage can cause smoke whenusing the air fry component. Please add parchment paper or aluminum foil to the baking trayfor easy cleaning purpose.
3. Make sure the baking pan is right underneath of the air fry basket, working as the drip tray.
4. Check your food often, because air fry cooking requires less time than regular cooking.
5. Open a door or window to ensure the cooking area is well ventilated.

Steam Clean:
Step 1: Put 1 cup (240mL) of distilled or filtered water into the baking pan.
Step 2: Heat the oven to 450 ℉ for 20-30 minutes.
Step 3: Once the steam clean has completed, turn off your oven.
Step 4: When it's cool, wipe grease and debris from your oven using a damp rag or sponge. Concentrate on removing only debris and grease that comes off easily. The steam cleaning process will loosen up the more stubborn, caked on grime.
Tips:

1.Using distilled or filtered water instead of water from your tap will keep your oven free of water spo and mineral deposits.
2.Be sure to wait until your oven is completely cool before starting to clean it.
3.Make sure to clean any racks that are in the oven as well.
4.Do not leave the residual water in the oven for any length of time.
5.This step may get pretty messy, so be sure to put on some old clothes and keep a garbage can nearb

Cooktop Cleaning Tips

- To prevent the cooktop from discoloring or staining, clean cooktop after each use, and wipe up acidic or sugary spills as soon as the cooktop has cooled.
- The sealed burners of your range are not secured to the cooktop and are designed to be removed.

Boil overs or spills will not seep underneath the cooktop. The burners should be cleaned. after each use.

Oven Light

The oven light is controlled by a push switch on the control panel. The light can be used while cooking or cleaning the oven.

⚠WARNING **Before replacing the oven light, make sure power is disconnected from the electrical box and the oven is cooled completely. Disassemble the light cover and replace the light bulb with a 40-watt halogen bulb. Install the light cover properly.**

Oven Operation

Temperature gauge

1. The gauge shows the oven temperature in both CELSIUS degree and FAHRENHEIT degree.
2. Correct reading can be obtained when the temperature inside the oven is steady.

Oven Ignition

This oven is powerful. It can reach 350°F in approximately 7 to 10 minutes, since the flame is ON throughout the entire usage of the oven. This oven is not equipped with an automatic re-ignition system that will cycle ON and OFF throughout your cooking. Read the following information to learn more about the oven analog-like operating system.

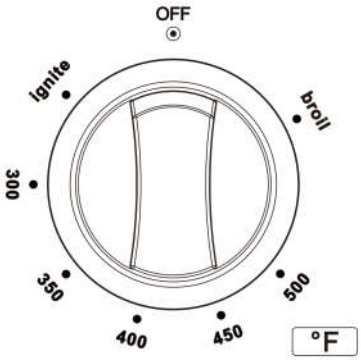

When using the oven, push and turn the oven knob counter-clockwise to the desired temperature (ex: 300°F) and hold until the oven burner ignites. As it ignites, wait 5 to 10 seconds before releasing the knob. Note that the flame will be large for the whole preheating process. Once preheated, the flame will automatically decrease in size, indicating the oven is ready for cooking. Open the door, place the food inside the oven and wait until the flame is visibly larger before closing back the door (this may take 8 to 10 seconds).

The above steps are outlined due to the thermo-cut-off safety mechanism in which the safety device must always remain in contact with the flame in order for it to stay ignited. When the flame is large the contact is strong.

The oven is designed to maintain the original selected cooking temperature. If a lower cooking temperature, than the original preheating setting is desired, the oven needs to be re-lit manually by repeating the steps above.

IMPORTANT

Safety device is equipped with the oven burner. When the flame goes out by accident, the gas supply will be shut off automatically. You need to turn the control knob back to the “OFF” position and ignite again.

⚠WARNING

If fail to light up the oven burner 3 times continuously, the oven might full of the gas, then open the oven door to allow gas dissipating before operating ignition again. Otherwise, the oven may explode and the user will get hurt.

Oven Baking Tips

For fast exhausting the smell of "burning" or "oily" odor emitting from a new oven, turn the oven knob to "Broil" and run for 30 minutes before initial use.

1. Never cover any slots, holes or passages in the oven bottom or cover an entire rack with materials such as aluminum foil. Doing so blocks air flow through the oven and may cause carbon monoxide poisoning. The aluminum foil lining may also trap heat, causing a fire hazard.
Do not use aluminum foil on any porcelain surface. Doing so will damage the porcelain and affect its durability.
2. Position the racks before preheating the oven.

Preheating

Allow the oven to preheat before placing food in the oven. Preheating is necessary for good results when baking cakes, cookies, pastry and breads.

Remove the broiler pan before preheating with the infrared broiler. Foods will stick on hot metal.

To preheat, turn the “Oven” control knob to the “Broil” position. Wait for the burner to become hot, approximately in 2 minutes.

Note: Condensation or fogging on the inside of the oven door glass is normal while preheating and it will usually evaporate by the end of the preheating cycle

Oven Function

Natural Airflow Bake occurs when heat is transferred into the oven from the bake burners in the bottom of the oven cavity. Heat is then circulated by natural airflow.This is a traditional bake setting.

Convection Bake

The oven fan will be switched on when the bottom burner is working. Heat is transferred to all over the inside of oven cavity. It provides a more even heat distribution inside the oven than regular cooking.

Setting Broil

Turn the oven control knob clockwise to select the Broil feature. When broiling, heat radiates downward from the oven broiler. The temperature of Broil feature is 500˚F (260˚C).

Convection Roast

The convection fan circulates the heat evenly over and around the food. Heat will be circulated over the food being roasted.

Broiler Operation

Note: Door must be closed during broiling operation.

The broil burner is located at the top of the oven. As broiling is done with the oven door closed, it is normal to add some smoke flavor to the food.

Oven Thermostat & Cooking times

The numbers printed on the control panel indicate the increasing oven temperature value (°F). To regulate the temperature, set the desired number on the control knob indicator.

Note: The BROIL position is only to turn on the broil burner.

Cooking times can vary according to the type of food, its density and its size. It is advisable to watch when cooking for the first time and to check results since similar results are obtained when preparing the same dishes under the same conditions.

Use the thermostat to control the temperatures, and control the time according to the cooking guides.

Care and Cleaning Recommendations

Stainless steel	Use a non-abrasive stainless steel cleaner and apply with a soft lint-free cloth. To bring out the natural luster, lightly wipe surface with a water-dampened microfiber cloth followed by a dry polishing cloth. Always follow the grain of stainless steel.
Burner grates	Remove and place on a flat surface near the sink. Clean with hot water and mild detergent or paste of baking soda and water. Do not immerse in water. Towel dry and rub lightly with olive oil. This help the grates keeping their shine and avoid any rust from appearing. Any leftover of water on the grates might result in rust or marks.
Burner pan	Remove surface debris before cleaning to help speed up the cleaning process and decrease the chance of scratching the surface during cleaning. Using mild abrasive cleaners or spray degreasers, clean and rinse the surface and dry immediately to avoid streaking. To clean hard water stains, use white vinegar and water. Rinse and dry immediately.
Surface burners	To clean hard water stains, use white vinegar and water. Rinse and dry immediately. Allow to cool. Use mild detergent or spray degreaser to clean. Rinse with water and towel dry. **NOTE:** Pro-style gas range require a high level of maintenance, if the orifices are clog or that the burners dirty, they might stop working. If it's the case, remove them from, clean them thoroughly and remove any excess of water. Forno is not responsible for any maintenance related issues.
Control knobs	Using a damp cloth, wipe with a mild detergent or spray degreaser; rinse and dry. Do not place in dishwasher.
Oven interior	Use mild abrasive cleaners, spray degreasers. Use a razor blade to gently lift baked on foods from oven cavity and window. For stubborn stains, spray with a mild abrasive cleaner or spray degreaser. Wash the entire oven cavity with soap and water to remove all cleaning chemicals.
Oven racks	To clean the upper rack, use mild detergent and a scouring pad. Rinse and dry. To clean the bottom pan, discard grease and wash with hot water and mild detergent. Rinse and dry. The upper rack is dishwasher safe. However, do not place the porcelain-coated rack or pan in dishwasher.

Troubleshooting Tips

Before you call for service

Range does not operate	Check that power is on. Check that electrical power to range and home circuit breaker is on.
Burners Do Not Light Or Spark Randomly	Electrical plug is not plugged into a live power outlet. Gas supply not turned on. Burner parts not replaced correctly. Holes in the simmer rings or slits in the burner rings are clogged. Clogged nozzles, or wet burners or electrodes. A fuse in your home may be blown or circuit breaker tripped.
Burners Have Yellow Or Yellow-Tipped Flames	Burner parts not replaced correctly. A. Yellow flames: Call for service. B. Yellow tips on outer cones: Normal for propane (LP) gas. C. Soft blue flames: Normal for natural gas. If burner flames look like (A), call for service. Normal burner flames should look like (B) or (C), depending on the type of gas.
Burner Flames Very Large Or Yellow	The range may be connected to the wrong fuel type. Contact the person who installed your range or made the conversion.
Burner Flames Contain Orange Flickers	Airborne dust; cool-mist humidifier; debris on or inside burner.
Oven Lights Do Not Work	The light bulb is defective. Replace the bulb.
Oven Racks Are Hard To Slide	Do not spray with a cooking spray or other lubricant sprays. See Full extension oven racks in the Care and Cleaning section.
Food Does Not Bake Or Roast Properly	The oven controls are improperly set. See the Baking or Roasting section. Oven not preheated for a long enough time.
	Incorrect cookware or cookware of improper size being used. Racks in the wrong position. See the Baking or Roasting section. Use a foil tent to slow down browning during roasting. Oven thermostat needs adjustment. See the Oven thermostat adjustment section.
Food Does Not Broil Properly	This model is designed for closed door broiling only. Close the door. Always broil with the door closed. The oven controls are not set at BROIL. See the Broiling section. Improper rack position. Cookware is not suited for broiling. Use the broiling pan and rack that came with your oven. Aluminum foil used on the broiling pan and rack has not been fitted properly and slit as recommended.

Oven Temperature Too Hot Or Too Cold	Need to adjust the oven knob temperature setting.
Steam From The Vent	When using the convection mode, it is normal to see steam coming out of the oven vent. As the number of racks or amount of food being cooked increases, the amount of visible steam will increase.
Burning Or Oily Odor Emitting From The Vent	This is normal in a new oven and will disappear in time.
Strong Odor	This is temporary. An odour caused by the insulation around the inside of the oven is normal for the first few times the oven is used.
Convection Fan Not On All The Time	The convection fan (depending on the function you are using) may cycle on and off until the function is over or the door is opened for optimized performance. This is normal. In addition, the convection fan may cycle in the clockwise and counter clockwise direction until the function is over or the door is opened.
Condensation Or Fogging On The Inside of the Door Glass	Condensation or fogging on the inside of the oven door glass is normal during the preheating of the oven and will evaporate usually by the end of the preheating cycle.
Cracking Or Popping Sound During Cleaning	This is normal. This is the sound of the metal heating and cooling during both the cooking and cleaning functions.
Excessive Smoking Occurs During Cleaning	The oven is heavily soiled. Turn the Oven Mode Selector and the Temperature knobs to OFF. Open the windows to rid the room of smoke. Wait until the locked door indicator light goes off. Wipe up excess soil and do the cleaning again.
Closing the door caused the oven flame out accidentally	When the oven temperature reaches the setting temperature, the flame inside the oven will be small. Closing the door at the minimum flame will cause the flame out accidentally. Please make sure the small flame is going to be bigger before you close the door (no more than 60s)

PLEASE READ BEFORE USING YOUR OVEN

For Forno Commercial Style Ranges Models:
FFSGS6277,FFSGS6274
Useful information for your oven:

- This oven is very powerful.
- To avoid burns, please use oven mitts when manipulation oven racks and be careful not to touch the oven door when in use.
- All knobs may reach 123F when oven is in use – although the standard regulations is max 148F please handle with care.
- For better Broil efficiency, pre-heat to 500F for 8 Minutes.

Cooking tips:
1- Pizza: Place rack on bottom level at 375F for 16 minutes then broil 2 to 3 minutes on top level.
2- Vegetables: Place rack second from bottom at 350F for 14 to 17 minutes.
3- Place rack on middle level at 350F for:
Fish: 4 to 6 minutes
Meats 10oz: 9-14 minutes
Chicken 8oz: 14-19 minutes
4- Turkey and Braised Meats:
Place rack at bottom level at 350F, no need to rise the cooking temperature above 350F for the first 20 minutes.

forno.ca
1-866-231-8893
info@forno.ca

Wire Diagram

FFSGS6277-30 FFSGS6277-30BLK FFSGS6277-30WHT

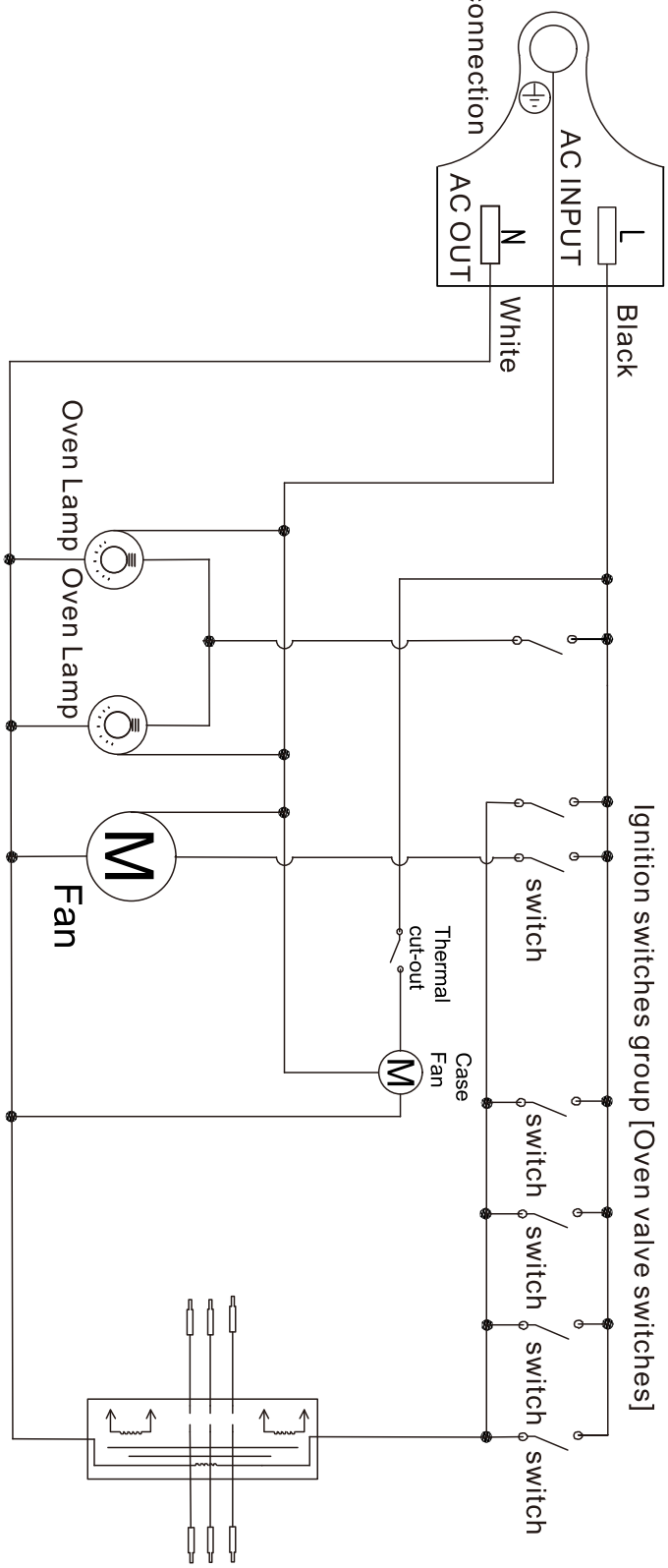

Caution: Label all wires prior to disconnection when servicing controls. Wiring errors can cause improper and dangerous operation. Verify proper operation after servicing.

FFSGS6274-30 FFSGS6274-30BLK FFSGS6274-30WHT

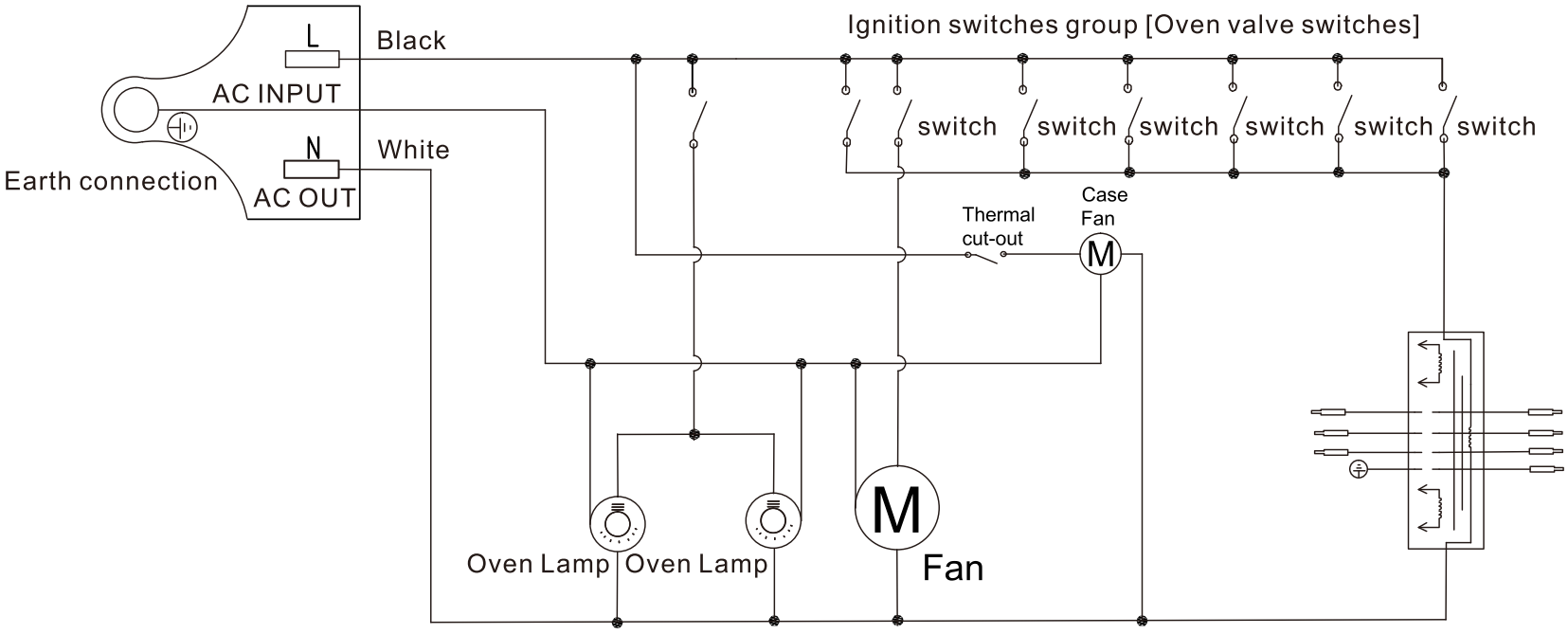

Caution: Label all wires prior to disconnection when servicing controls. Wiring errors can cause improper and dangerous operation. Verify proper operation after servicing.

FFSGS6277-36 FFSGS6277-36BLK FFSGS6277-36WHT

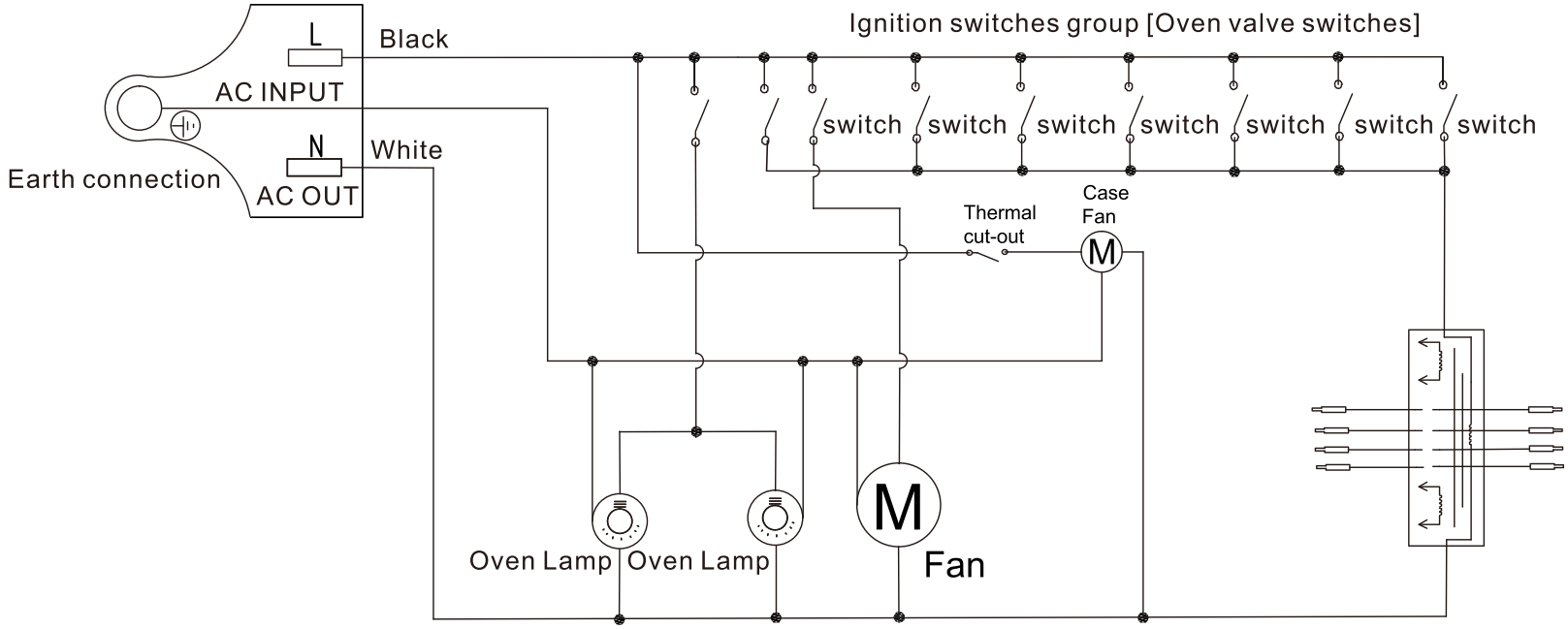

Caution: Label all wires prior to disconnection when servicing controls. Wiring errors can cause improper and dangerous operation. Verify proper operation after servicing.

FORNO®

Alta Qualita

FOR

FAST SUPPORT

EMAIL AT ***INFO@FORNO.CA***

Customer Support: Call 1-866-231-8893 or email: info@forno.ca