PRORUN®

GAS///

Operator's Manual

BACKPACK MIST BLOWER

MODEL: PMB2884

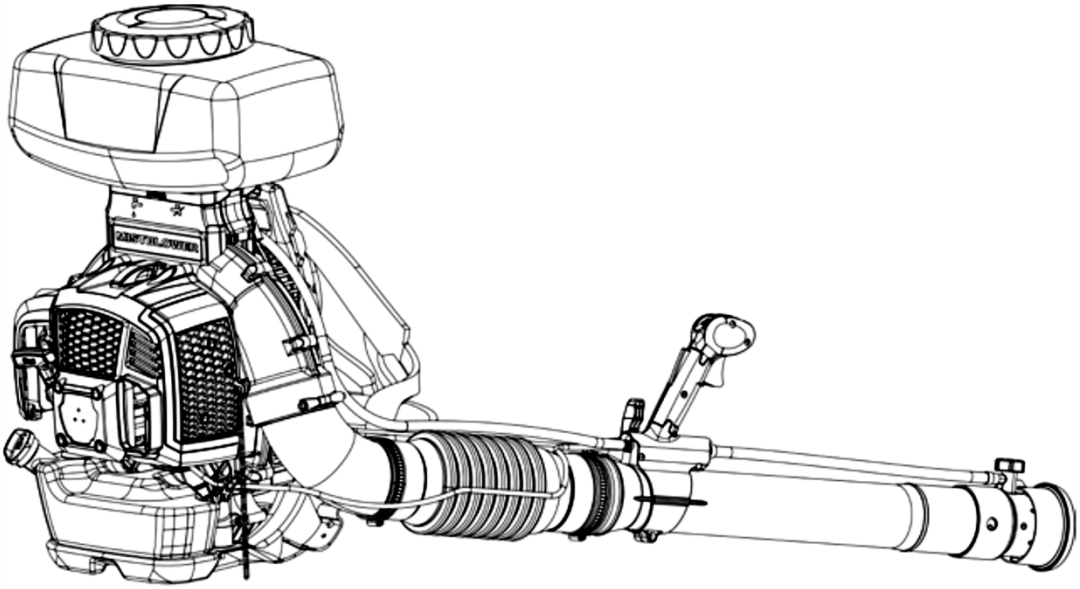

Everything PRORUN

Before operating, read the instructions.

⚠ **IMPORTANT - READ CAREFULLY BEFORE USE**

⚠ **IMPORTANT SAFETY INSTRUCTIONS – SAVE THESE INSTRUCTIONS**

WARNING: To reduce the risk of injury, the user must read and understand the Operator's Manual before using this product. Save these instructions for future reference.

Please let us know what you think.
To leave a review and see our full line of products, visit:

proruntools.com ★ ★ ★ ★ ★

1-844-905-0882, info@proruntech.com

Version: C - Issue Date: 2025/03/20

PRORUN

1. PRODUCT SPECIFICATIONS

Model	PMB2884
Weight (Empty Chemical Tank and Fuel Tank)	30.6 lbs. (13.9 Kg)
Weight (Full Chemical Tank and Fuel Tank)	65 lbs. (29.5 Kg)
Nominal Fuel Tank Capacity	0.55 gal. (2.1 L)
Nominal Chemical Tank Capacity	3.7 gal (14 l L)
Engine Displacement	75.6 cm^2
Power	4.16 HP (3.1 kW)
Engine Rotation Speed	7300 min^{-1}
Maximum Rotational Frequency of the Fan	7300 min^{-1}
Idle Speed	2800 ± 200 min^{-1}
Spark Plug	BOSCH USR7AC CHAMPION RZ7C TORCH CMR7H
Fuel / Oil Ratio	50:01:00
Air Flow Rate	706 CFM (20 m^3 / min)
Handle Vibration Level According to ISO 22867	2.44 m / s^2
Measurement Uncertainty	1.5 m / s^2
Emission Sound Pressure Level at Operator Position According to ISO 22868	99.3 dB(A)
Measurement Variable	3 dB(A)
Measured Sound Power Level According to ISO 22868	112.06 dB(A)
Measurement Variable	3 dB(A)
Declared Sound Power Level	115 dB(A)

2. TABLE OF CONTENTS

1. PRODUCT SPECIFICATIONS.....2

2. TABLE OF CONTENTS.....3

3. GENERAL WARNINGS.....4

4. GENERAL SAFETY REGULATIONS.....14

5. SYMBOLS.....17

6. SET UP & CONTROLS.....19

7. OPERATIONS.....36

8. MAINTENANCE.....41

9. STORAGE & TRANSPORT.....46

10. TROUBLESHOOTING.....49

11. EXPLODED VIEWS AND PARTS.....50

3. GENERAL WARNINGS

WARNING DEFINITIONS

⚠ THIS IS THE SAFETY ALERT SYMBOL. IT IS USED TO ALERT YOU TO POTENTIAL PERSONAL INJURY HAZARDS. OBEY ALL SAFETY MESSAGES THAT FOLLOW THIS SYMBOL TO AVOID POSSIBLE INJURY OR DEATH.

⚠ DANGER! INDICATES A HAZARDOUS SITUATION WHICH, IF NOT AVOIDED, WILL RESULT IN DEATH OR SERIOUS INJURY.

⚠ WARNING! INDICATES A HAZARDOUS SITUATION WHICH, IF NOT AVOIDED, COULD RESULT IN DEATH OR SERIOUS INJURY.

⚠ CAUTION! INDICATES A HAZARDOUS SITUATION WHICH, IF NOT AVOIDED, COULD RESULT IN MINOR OR MODERATE INJURY.

⚠ IMPORTANT! HIGHLIGHTS INFORMATION AND PRACTICES NOT RELATED TO PERSONAL INJURY.

NOTE ADDRESSES INFORMATION AND PRACTICES NOT RELATED TO PERSONAL INJURY.

⚠ SAVE THESE INSTRUCTIONS

This manual contains important instructions that should be followed during setup, operation, and maintenance of the mist blower.

⚠ CAUTION! NEVER MODIFY THIS POWER TOOL IN ANY WAY.

Only attachments supplied by PRORUN or expressly approved by PRORUN for use with the specific PRORUN model are authorized. Although certain unauthorized attachments are useable with PRORUN power tools, their use may, in fact, be extremely dangerous.

- Avoid loose-fitting jackets, scarves, neckties, jewelry, flared or cuffed pants, unconfined long hair or anything that could become caught on branches, brush or the moving parts of the unit. Secure hair so it is above shoulder level.
- This machine is extremely noisy; therefore operators must wear acoustic protection equipment.

- The dusting and spreading mode can be used for powder or dry granulate up to a grain size of 0.20 inches (5 mm).
- Observe all legal requirements for handling the chemicals. Observe the directions for use on the label of the product at issue.

SET UP PRECAUTIONS

1. Gasoline fuel and fumes are flammable, and potentially explosive. Use proper fuel storage and handling procedures. Do not store fuel or other flammable materials nearby.
2. Have multiple ABC class fire extinguishers nearby.
3. Operation of this equipment may create sparks that can start fires around dry vegetation. A spark arrestor may be required. The operator should contact local fire agencies for laws or regulations relating to fire prevention requirements.
4. Set up and use only on a flat, level, well-ventilated surface.
5. Wear ANSI-approved safety goggles, heavy-duty work gloves, and dust mask/respirator during use.
6. Use only lubricants and fuel recommended in the PRODUCT SPECIFICATIONS chart of this manual.

TRAINING

⚠ WARNING! READ THESE INSTRUCTIONS CAREFULLY BEFORE OPERATING THE MACHINE.

Become acquainted with the controls and the proper use of the machine. Learn how to stop the engine quickly.

1. Never allow children or people unfamiliar with these instructions to use the machine. Local laws can restrict the minimum age of the operator.
2. Never use the machine if the user is tired or unwell, or has taken medicine, drugs, alcohol or any substances which may slow his reflexes and compromise his judgement.
3. Bear in mind that the operator or user is responsible for accidents or unexpected events occurring to other people or their property.
4. If the machine is sold or lent to others, make sure that the operator looks over the user instructions contained in this manual.
5. Chemicals may be used only by people trained in their handling and the appropriate first-aid measures.

OPERATING PRECAUTIONS

1. An electronic charge may be created in the blowtubes and nozzle assemblies when applying dry materials (e.g. dust) with the dusting and spreading attachments. This is especially true in low humidity conditions, Check the label and / or material safety sheet of the chemical(s) that you are applying. To reduce the risk of severe or fatal injury, do not use the mist blower to apply substances that may create a combustible or explosive dust cloud. For example: never use the mist blower to apply sulfur or sulfur compounds, since they may be highly explosive and have relatively low ignition and / or melting points.

Fig 1

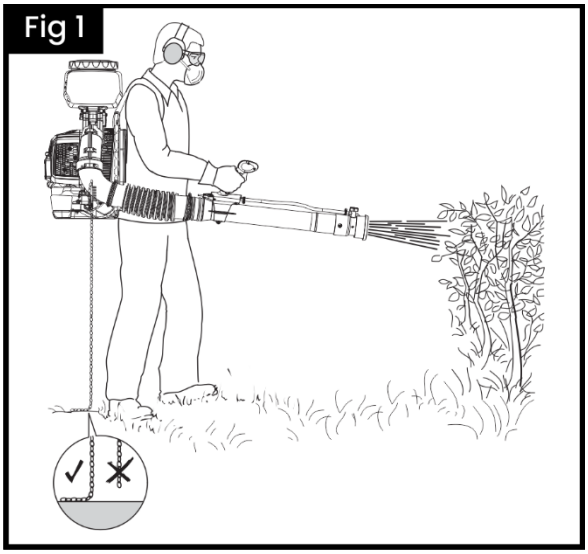

⚠ WARNING! TO REDUCE THE RISK OF SPARKING ENSURE THAT DISCHARGE SYSTEM IS CORRECTLY INSTALLED

Refer to Figure 1

- To reduce the risk of sparking when applying any dry substance, make sure that the discharge system (antistatic wire in the mistflower connected to a metal chain) is completely and properly mounted to the machine, and that the discharge chain is making contact with the ground. It is essential to follow the assembly instructions.
- Do not use the dusting and spreading attachment on non-conductive surfaces (e.g. plastic, asphalt).
- Never operate your machine with a missing or damaged discharge system.

2. Some chemicals sprayed with your power tool may contain toxic and / or caustic substances. Such chemicals can be dangerous and cause serious or fatal injury to persons and animals and / or severe damage to plants and the environment.
3. Avoid direct contact with chemicals. Follow the chemical manufacturer's instructions with respect to any contact with its product.
4. Read the label each time before mixing or using the chemical and before storing or disposing of it. Do not trust your memory. Careless or improper use may cause serious or fatal injury.
5. Chemicals can be harmful to individuals, animals and the environment if improperly used. In addition, some chemicals that are caustic, corrosive or poisonous should not be used in your mist blowers.
6. Mix only compatible pesticides. Wrong mixtures can produce toxic fumes. When handling chemicals and when spraying, make sure you are operating in accordance with local, state, and federal environmental protection rules and guidelines. Do not spray in windy conditions. To help protect the environment, use only the recommended dosage – do not overuse. Pay special attention when using near watersheds, waterway, etc.

7. Keep chemicals out of reach of children, other unauthorized people and animals. When not in use, store chemicals in a safe place. Follow the manufacturer's recommendations for proper storage.

⚠ CAUTION! PREPARE CHEMICAL SOLUTIONS OF ACCORDING TO THE MANUFACTURER'S INSTRUCTIONS.

- Only prepare sufficient solution for the job at hand so that nothing is left over.
- Mix chemicals only in accordance with instructions – wrong mixtures can produce toxic fumes or explosive mixtures.
- Never spray chemicals undiluted.
- Prepare solution and fill the container outdoors only, in well-ventilated locations.
- Do not store spray solution in the container for longer than one day.
- Store and transport spray solution only in approved containers.
- Never store the spray solution in containers intended for foods, drinks or animal feed.
- Do not store spray solution with foods, drinks or animal feed.
- Keep spray solution out of the reach of children and animals.
- Store the spray solution in a place secured against unauthorized use.

⚠ CAUTION! ALWAYS WEAR ADEQUATE CLOTHING WHICH DOES NOT HAMPER MOVEMENTS WHEN USING THE MACHINE.

- Always wear slim-fitting protective clothes, anti-vibration gloves, protective goggles, half-mask respirator, acoustic protection equipment, anti-shear safety boots with non–slip soles.
- Never wear scarves, shirts, necklaces or any hanging or flapping accessory that could catch in the machine.
- Tie up your hair if it is long.
- A breathing mask should be used when there is a risk of dust.

⚠ WARNING! DANGER! PETROL IS HIGHLY FLAMMABLE.

- Keep the fuel in containers which have been specifically manufactured and homologated for such use.
- Add fuel using a funnel and only outdoors. Do not smoke during this operation and at all times fuel is handled.
- Slowly open the fuel tank to allow the pressure inside to decrease gradually.
- Add the fuel before starting the engine, Never remove the tank cap or add fuel while the engine is running or when the engine is hot.
- If you have spilt some fuel, do not attempt to start the engine but move the machine away from the area of spillage and avoid creating any source of ignition until the fuel has evaporated and fuel vapors have dissipated.
- Always put the tank and fuel container caps back on and tighten well.
- Immediately clean up all traces of fuel spilt on the machine or on the ground.

- Never start the machine in the same place you refilled it with fuel. The engine must be started in an area at least 10 feet (3 meters) from where you refilled the fuel tank.
- Make sure your clothing does not come into contact with the fuel. If you have contacted fuel, change your clothes before starting the engine.

8. Replace faulty or damaged mufflers.
9. Never use a machine that is faulty. Before using the machine, carry out an accurate inspection of the machine's efficiency and in particular:

- The throttle trigger must move freely. It must not require extra force and should return automatically and rapidly back to the neutral position.
- The engine stop switch knob must easily move from one position to the other.
- The electric cables, and in particular the spark plug cable, must be in perfect condition to avoid the generation of any sparks. The spark plug cap must be correctly fitted onto the spark plug.
- The machine handgrips and protection devices must be clean and dry and well fastened to the machine.
- The guards must be fitted before starting and never be damaged.
- The rotor must never be damaged.

10. Thoroughly inspect the whole work area and use a rake or yard brush to manually loosen debris and remove anything that could be projected by the machine or be a hazardous source (stones, branches, iron wire, bones etc.).
11. Always check for any objects that may block the air intake screen before beginning work. A clogged air intake reduces the machine's blowing capacity and increases the engine's working temperature, which can result in engine failure. Stop the engine and remove the object.
12. If the machine catches fire or other emergency occurs which forces you to release yourself from the machine, open the harness straps and let the machine fall backwards.

⚠ CAUTION! ADHERE TO THE FOLLOWING WHEN FILLING THE TANK.

13. Tighten all connections and check to be sure the hose is securely attached and in good condition. Keep the valve lever closed.
14. Before using the power tool with chemicals, fill it with fresh water to assure that you have it properly assembled and practice spraying. Also, check for any leaks at this time. When thoroughly familiar with the power tool operation, follow normal operating procedures.
15. Fill your power tool in well-ventilated areas, outdoors.

DO NOT USE:

- Flammables in the mist blower, which can explode causing serious or fatal injury.
- Caustic or corrosive materials in the mist blower, which could result in damage to the unit.
- Liquids with a temperature above 120°F (50°C) to avoid scalding and damage to the unit.

16. To fill the container, place the power tool on a level surface. To reduce the risk of contaminating the surrounding environment, be careful not to overfill the container with a chemical solution.
17. To reduce the risk of injury, do not fill the unit while wearing it on your back.

18. If you fill the container with a hose attached to a central water supply, be sure the end of the hose is out of the solution to reduce the risk of backflow, i.e. the chemicals being sucked into the water supply in the case of a sudden vacuum.
19. Calculate the correct amount of chemical solution so that it is used up at one time, with no extra solution left in the tank.
20. After filling, fit the container cap and tighten it down firmly.
21. Check for leakage while refilling and during operation. A leak from the container or a loose fitting could soak your clothing and come into contact with your skin.

⚠ CAUTION! BEFORE STARTING ADHERE TO THE FOLLOWING.

⚠ WARNING! RISK OF FIRE!

Check fuel system for leaks, especially the visible parts, e.g., filler cap, hose connections, manual fuel pump.

22. Always check your power tool for proper condition and operation before starting. Set the throttle trigger to the stop position. The throttle trigger must move freely and always spring back to the idle position. Never attempt to modify the controls or safety devices.
23. Do not start the engine if there are leaks or damage. Have the machine repaired by a PRORUN approved servicing dealer before using it.
24. To reduce the risk of leakage and skin contact with chemicals, check that the container cap and all connections in the path of the spray are tight. Be sure the hose is securely attached and in good condition. Keep the valve lever closed.
25. Never operate your power tool if it is damaged, improperly adjusted or maintained, or not completely or securely assembled.
26. Check that the spark plug cover is securely mounted on the spark plug. A loose spark plug cover may cause arcing that could ignite combustible fumes and cause a fire.
27. Keep the control handle clean and dry at all times. It is particularly important to keep it free of moisture, pitch, oil, fuel mix, grease or resin in order for you to maintain a firm grip and properly control your power tool.
28. To reduce the risk of injury from thrown parts, check the fan housing for damage (cracks, nicks, chipping). If any damage is found, stop using the unit and contact PRORUN Customer Service for repair.
29. Your power tool is a one-person machine. To reduce the risk of eye or other injury from thrown objects, ensure that bystanders are at least 65 feet (20 meters) away when starting and during use. Stop operation immediately if you are approached.
30. When you pull the starter grip handle, do not wrap the starter rope around your hand. Do not let the grip snap back but guide the starter rope to rewind it properly. Failure to follow this procedure may result in injury to your hand or fingers and may damage the starter mechanism.
31. The assistance of another person may be needed in placing the unit on your back after starting. In order to reduce the risk of injury to the assistant from thrown objects, chemical spray / dust, or from contact with hot exhaust fumes, the engine should be kept at idle speed during this brief period. Your assistant should not stand in the area of the outlet nozzle or exhaust. When possible, the unit should be started and operated without assistance.

DURING USE

1. To reduce the risk of loss of control, never carry the unit with the strap(s) over one shoulder. Wrap your fingers tightly around the handle, keeping the control handle cradled between your thumb and forefinger. Keep your hand in this position to have your machine under control at all times. In order to keep the chemical tank upright and reduce the risk of spillage, do not bend at the waist. Bend only at the knees and support yourself as required to ensure proper balance.
- Remember that a mist blower filled with liquid has a significant amount of weight. Use caution when bending, leaning or walking.
2. Do not overreach. Keep proper footing and balance at all times. Special care must be taken in slippery conditions (wet ground, snow and ice) and in difficult, overgrown terrain. Watch for hidden obstacles such as tree stumps, roots and ditches to avoid stumbling. For better footing, clear away fallen branches, scrub and cuttings. Be extremely cautious when working on slopes or uneven ground.
3. To reduce the risk of injury from loss of control, never work on a ladder, in a tree or on any other insecure support. During work breaks, do not leave the power tool in the hot sun or near any heat source.
4. Operate and start your power tool only outdoors and in a well-ventilated area. Operate it under good visibility and daylight conditions only.

⚠ WARNING! AS SOON AS THE ENGINE IS RUNNING THIS MACHINE GENERATES TOXIC EXHAUST FUMES CONTAINING CHEMICALS, SUCH AS UNBURNED HYDROCARBONS (INCLUDING BENZENE) AND CARBON MONOXIDE, THAT ARE KNOWN TO CAUSE RESPIRATORY ILLNESS / INJURY, CANCER, BIRTH DEFECTS, OR OTHER REPRODUCTIVE HARM.
Some of the gases (e.g. carbon monoxide) may be colorless and odor-less. To reduce the risk of serious or fatal injury/illness from inhaling toxic fumes, never run the machine indoors or in poorly ventilated locations.

5. In the event of an emergency, switch off the engine immediately move the setting lever to 0 or STOP.
- Never spray in the direction of humans, animals or property which might be injured or damaged by spray formula.
- Pay attention to the direction of the wind, i.e., do not work against the wind. When spraying, stand so that the wind does not blow towards you or bystanders.
- Keep children and pets away from areas that have just been sprayed. After the use of some chemicals, especially agricultural pesticides, a notice must be posted on the treated area that a "Restricted Entry Interval" (REI) is in effect. See the product's label and any applicable governmental regulations.
6. To reduce the risk of personal injury, do not direct air blast towards bystanders, since the high pressure of the air flow could injure eyes and could blow small objects at great speed.

7. The blower fan between the air intake and output openings rotates whenever the engine is running. Never insert any foreign object into the air intake of the machine or into the nozzle of the blower. It will damage the fan wheel and may cause serious injury to the operator or bystanders as a result of the object or broken during subsequent spraying with a different type of chemical (e.g., residual herbicide may damage or kill plants being sprayed with a pesticide). Do not store the mist blower with spray solution in the chemical tank.
8. Do not place the blower on the ground when operating at high speed. This can cause small objects such as sand, grass, dust, etc. to be pulled into the air intake and damage the fan wheel.
9. The muffler and other parts of the engine (e.g. fins of the cylinder, spark plug) become hot during operation and remain hot for a while after stopping the engine. To reduce risk of burns, do not touch the muffler and other parts while they are hot. Keep the area around the muffler clean. Remove excess lubricant and all debris such as pine needles, branches or leaves. Let the engine cool down sitting on concrete, metal, bare ground or solid wood away from any combustible substances.
10. An improperly mounted or damaged cylinder housing or a damaged / deformed muffler shell may interfere with the cooling process of the muffler. To reduce the risk of fire or burn injury, do not continue to work with a damaged or improperly mounted cylinder housing or a damaged/deformed muffler shell.
11. Always wash yourself thoroughly with soap and water after spraying or handling chemicals. Shower immediately and wash all protective clothing separately from other items. Follow any additional recommendations from the chemical manufacturer.

- Always clean dust and dirt off the power tool.

12. Empty, rinse and clean chemical tank and assembly after each use. This helps to prevent the solution from crystallizing, which could later cause clogging and chemical damage to the unit. In addition, residual chemicals may have undesirable effects

⚠ WARNING! THE NOISE AND VIBRATION LEVELS SHOWN IN THESE INSTRUCTIONS ARE THE MAXIMUM LEVELS FOR THE USE OF THE MACHINE.
Insufficient maintenance has a significant impact on vibration and noise emission; therefore it is necessary to take preventive steps to eliminate possible damage due to high levels of noise and stress from vibration. Maintain the machine well, wear ear protection devices, and take breaks while working.

13. Rotating parts can cause serious injury. Avoid contacting the rotating parts when is still rotating.
14. Operating the machine at a stable speed and gripping the handle firmly with suitable force can decrease the vibration level. Low engine speed mean low-noise level, so operate the machine at the lowest engine speed necessary to accomplish the task. During a working day, you should take frequent and adequate breaks to prevent damage from vibration and damage to the ears.

15. Prolonged exposure to vibrations can cause injuries and neurovascular disorders (also called “Raynaud’s syndrome” or “white hand”), especially to people suffering from circulation disorders. The symptoms can affect the hands, wrists and fingers and are shown through loss of sensitivity, torpor, itching, pain and discoloring or structural changes to the skin. These effects can be worsened by low ambient temperatures and / or by gripping the handgrips excessively tightly. If the symptoms occur, the length of time the machine is used must be reduced and a doctor consulted.
    In order to reduce the risk of white finger disease and carpal tunnel syndrome, please note the following:
    - Wear gloves and keep your hands warm.
    - Keep the anti-vibration (“AV”) system well maintained. A power tool with loose components or with damaged or worn AV elements will tend to have higher vibration levels.
    - Maintain a firm grip at all times, but do not squeeze the handles with constant, excessive pressure. Take frequent breaks. parts being thrown out at high speed.

ADJUSTING THE HARNESS

⚠ WARNING! THE HARNESS MUST ALWAYS BE WORN WHEN WORKING WITH THE MACHINE.
Failure will inhibit your ability to maneuver safely and can result in injury to yourself or others.

- Never use a harness with a defective quick release.
- Use quick release in any emergency situation that requires you to free yourself from the machine and harness.
- Adjust carrying harness to suit your size before starting work. In an emergency, you may slip out of the harness and throw off the machine quickly. Try slipping out of the harness a number of times before using the machine in order to become accustomed to it. Do not throw off the machine while practicing as it could damage the machine.
- Make sure that the waist belt is closed and correctly adjusted.
- There is a risk that an unclosed belt can get stuck or sucked into the fan of the machine.
- Tighten the side straps so that the pressure is evenly distributed across the shoulders.

Refer to Figure 2

Fig 2

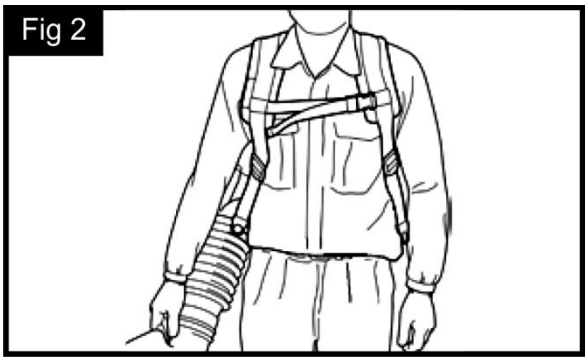

SERVICE PRECAUTIONS

1. Before service, maintenance, or cleaning:
   a. Turn the engine switch to its “OFF” position.
   b. Allow the engine to completely cool.
   c. Then, remove the spark plug cap from the spark plug.
2. Keep all safety guards in place and in proper working order. Safety guards include the muffler, air cleaner, mechanical guards, and heat shields, among other guards.
3. **Do not alter or adjust any part of the equipment or its engine that is sealed by the manufacturer or distributor.** Contact PRORUN Customer Service. Only a qualified service technician may adjust parts that may increase or decrease governed engine speed.
4. Wear ANSI-approved safety goggles, heavy-duty work gloves, and dust mask/respirator during service.
5. Maintain labels and nameplates on the equipment. These carry important information. If unreadable or missing, contact an authorized dealer for a replacement.
6. Have the equipment serviced by a PRORUN Customer Service qualified repair person using only identical replacement parts. This will ensure that the safety of the equipment is maintained. Do not attempt any service or maintenance procedures not explained in this manual or any procedures that you are uncertain about your ability to perform safely or correctly.
7. Store equipment out of the reach of children.
8. Follow scheduled engine and equipment maintenance.

REFUELING:

1. Do not refill the fuel tank while the engine is running or hot.
2. Do not smoke, or allow sparks, flames, or other sources of ignition around the equipment, especially when refueling.

⚠ WARNING! TO PREVENT FUEL LEAKAGE AND FIRE HAZARD DO NOT FILL FUEL ABOVE THE BOTTOM OF THE THREADS.

3. Do not fill the fuel tank to the top. Leave a little room for the fuel to expand as needed, at least 1 inch from the top of the neck.
4. Refuel in a well-ventilated area only.
5. Wipe up any spilled fuel and allow excess to evaporate before starting the engine. To prevent FIRE, do not start the engine while the smell of fuel hangs in the air.

4. GENERAL SAFETY REGULATIONS

⚠ WARNING! **TO REDUCE THE RISK OF FIRE, OR INJURY:**

1. **Physical Condition of Operator.** Do not operate this unit when tired, ill, or under the influence of alcohol, drugs, or medication.
2. **Clothing Recommendation.** Always wear heavy, long pants, boots, gloves, and a long-sleeved shirt. To reduce the risk of injury associated with objects being drawn into rotating parts, do not wear loose clothing, scarves, jewelry, etc. Secure hair so it is above shoulder level.
3. **Condition of Unit before Use.** Inspect unit before each use. Replace damaged parts. Check for fuel leaks. Make sure all visible fasteners are in place and secure. Make sure attachments are properly installed and securely fastened. Be sure guards are properly attached and in the position recommended by the manufacturer.
4. **Proper Stance.** Keep firm footing and balance. Do not over-reach. Keep all parts of your body away from hot surfaces.
5. **Exhaust Gases.** Never start or run the unit inside a closed room or building; breathing exhaust fumes can kill.
6. **Fueling.** Mix and pour fuel outdoors where there are no sparks or flames. Slowly remove the fuel cap only after stopping the engine. Do not smoke while fueling or mixing fuel. Wipe spilled fuel from the unit. Move at least 10 feet (3 m) away from the fueling source and site before starting the engine. Always store gasoline in a container approved for flammable liquids.
7. **Work Area.** Clear the area of children, bystanders, and pets. At a minimum, keep all children, bystanders, and pets outside a 50 feet (15 m) radius; outside the 50 feet (15 m) zone, there is still a risk of injury from thrown objects. Bystanders should be encouraged to wear eye protection. If you are approached, stop the engine.
8. **Work from Ladders or on High Surfaces.** Work from ladders or high places (such as roofs) is prohibited and could result in severe injury.
9. **Transportation and Storage of the Unit.** The operator's manual should provide transportation and long- and short-term storage instructions.
10. **Service Work.** To reduce the risk of injury associated with contacting rotating parts, stop the engine before installing or removing attachments. Do not operate without guards in place. Always disconnect the spark plug before performing maintenance or accessing movable parts.

11. **Additional Operating Recommendations for Blowers and Blower-Vacuums.**
    a. Operate power equipment only at reasonable hours—not early in the morning or late at night when people might be disturbed.
    b. Comply with times listed in local ordinances.
    c. To reduce sound levels, limit the number of pieces of equipment used at any one time.
    d. Operate blowers at the lowest possible engine speed to do the job.
    e. Use rakes and brooms to loosen debris before blowing.
    f. In dusty conditions, slightly dampen surfaces or use mister attachment when water is available.
    g. Conserve water by using blowers instead of hoses for many lawn and garden applications, including areas such as gutters, screens, patios, grills, porches, and gardens.
    h. Avoid blowing debris towards people, pets, open windows, or cars when using unit.
    i. Use the full blower nozzle extension when blowing.
12. **After using the mist blower and other equipment, CLEAN UP!** Dispose of debris in trash receptacles.
13. **Do not allow the machine to be used as a toy.** Close attention is necessary when used by or near children.
14. **Use the machine only as described in this manual.** Use only manufacturer's recommended attachments.
15. **If the machine is not working as it should, has been dropped, damaged, left outdoors, or dropped into water, return it to an authorized service center.**
16. **Do not handle the machine with wet hands.**
17. **Do not put any object into openings.** Do not use with any opening blocked; keep free of dust, lint, hair, and anything that may reduce air flow.
18. **Keep hair, loose clothing, fingers, and all parts of body away from openings and moving parts.**
19. **Take extra care when standing and cleaning on stairs.**
20. **Do not use to pick up flammable or combustible liquids, such as gasoline, or use in areas where they may be present.**
21. **Do Not Use In Rain.**
22. **Wear ANSI-approved safety goggles, hard hat, and heavy-duty rubber work gloves.** Use a face or dust mask if the operation is dusty.
23. **Do Not Force The Machine**. It will do the job better and with less likelihood of injury at the rate for which it was designed.
24. **Do not Overreach**. Keep proper footing and balance at all times.
25. **Stay Alert**. Watch what you are doing. Use common sense. Do not operate the machine when you are tired.
26. **Store Idle The Machine Indoors**. When not in use, appliances should be stored indoors in dry, and high or locked-up locations – keep out of the reach of children.
27. **Maintain Appliance With Care.** Follow instructions for lubricating and changing accessories. Keep handles dry, clean, and free from oil and grease.

28. **Check Damaged Parts.** Before further use of the appliance, a guard or other part that is damaged should be carefully checked to determine that it will operate properly and perform its intended function. Check for alignment of moving parts, binding of moving parts, breakage of parts, mounting, and any other condition that may affect its operation. A guard or other part that is damaged should be properly repaired or replaced by a qualified technician unless indicated elsewhere in this manual.
29. **Remove all hard objects from the work area.** Do not blow debris in the direction of people, animals, or property.
30. **Use only the provided accessories.**
31. **Maintain labels and nameplates on the appliance.** These carry important safety information. If unreadable or missing, contact an approved dealer for a replacement.
32. **People with pacemakers should consult their physician(s) before use.** Electromagnetic fields in close proximity to heart pacemaker could cause pacemaker interference or pacemaker failure. The warnings, precautions, and instructions discussed in this instruction manual cannot cover all possible conditions and situations that may occur. It must be understood by the operator that common sense and caution are factors which cannot be built into this product but must be supplied by the operator.

MACHINE DESCRIPTION AND USAGE

This Mist Blower is a power tool for spraying chemicals. Some special safety precautions must be observed as with any other power tool to reduce the risk of personal injury. Special safety precautions must be observed to reduce the risk of personal injury.

INTENDED USE

This Mist Blower was designed and manufactured for:

- Spraying chemicals and other liquids to control pests and weeds in fruit, flower and vegetable gardens, on trees and bushes and on other plants, such as coffee, tobacco and cotton. It is also useful in the maintenance of young trees for, e.g., controlling the bark beetle and other pests and plant diseases.
- Only use plant protection products that are specifically approved for use in sprayers / mist blowers by their manufacturer and that meet all applicable safety regulations, standards and ordinances.

Any other use differing from the above mentioned ones could be hazardous, harm people and/or damage things and the machine.

USER TYPES

The Mist Blower is for professional use only. All operating and servicing personnel should be trained and familiarized with the proper handling procedures for the chemical products being used, as well as with first aid / emergency care, and liquid and dry chemical disposal regulations.

DENTIFICATION LABEL (SYMBOL) AND MACHINE COMPONENTS

Your machine must be used carefully. Symbols have therefore been placed on various parts of the machine to remind you of the main precautions to be taken. Their meanings are explained under SYMBOLS. You are also asked to carefully read the safety regulations in the specific chapter of this manual. Replace damaged or illegible labels.

5. SYMBOLS

This page depicts and describes safety symbols that may appear on this product. Read, understand, and follow all instructions on the machine before attempting to assemble and operate. The labels on the machine are to be considered an integral part of the machine. Should a label come off or become illegible, contact your dealer to replace it.

⚠ WARNING! YOUR RESPONSIBILITY - RESTRICT THE USE OF THIS POWER MACHINE TO PERSONS WHO READ, UNDERSTAND, AND FOLLOW THE WARNINGS AND INSTRUCTIONS IN THIS MANUAL AND ON THE MACHINE.
SAVE THESE INSTRUCTIONS!

SYMBOL	SIGNIFICATION
	**WARNING!** **The failure to use this machine correctly can be hazardous for oneself and others.**
	**WARNING!** **Read the operator's manual(s) and follow all warnings and safety instructions.** Failure to do so can result in serious injury to the operator and/or bystanders.
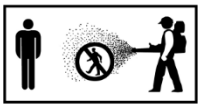	**Never spray in the direction of humans, animals or property which might be injured or damaged by spray formula.** Keep bystanders away from more than 65 feet (20 meters) when spraying.
	**Machine noise may damage your hearing. Wear sound barriers (ear plugs or ear mufflers) to protect your hearing.** Continual and regular users should have their hearing checked regularly.
	**Wear safety goggles or face shield to reduce the risk of injury to your eye.**
	**Wear respiratory protection when working with toxic chemicals, breathing toxic chemicals can cause serious or fatal injury.**
	**For some chemicals it is advisable to wear impermeable coveralls or an impermeable work apron. Check the product label.** If you are spraying over-head or if the spray may reach head height, wear a wide brim hat or other suitable head covering. Do not wear shorts, sandals or go barefoot.
	**Always wear rubber/chemical-resistant gloves when handling this machine.** **Wear rubber/chemical-resistant boots.**
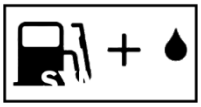	**Indicates the port to refuel the "MIXED GASOLINE".**

PRORUN

SYMBOL	SIGNIFICATION
	**Indicates Choke Closed.**
	**Indicates Choke Open.**
H	**Adjustment of Carburetor.** The screw located under the (H) stamp is the HIGH-SPEED mixture adjustment screw.
L	**Adjustment of Carburetor.** The screw located under the (L) stamp is the LOW-SPEED mixture adjustment screw.
	**Indicates Adjustment of the Discharge Rate of the Powder**
	**Indicates Engine Switch ON (I).** **Indicates Engine Switch OFF (0).** After pressing the stop switch, the switch automatically returns to the ON/START position (I).
	**Metering Lever.** **Indicates Dusting and Spreading Dry Mode.**
	**Metering Lever.** **Indicates Mist Blowing Wet Mode.**
	**Liquid Valve Lever.** Turn counter-clockwise to open the liquid valve.
	**Liquid Metering Knob.** Set the liquid discharge rate.

6. SET UP & CONTROLS

SAVE THESE INSTRUCTIONS

This manual contains important instructions that should be followed during setup, operation, and maintenance of the chainsaw.

READ THE ENTIRE IMPORTANT SAFETY INFORMATION SECTION AT THE BEGINNING OF THIS MANUAL INCLUDING ALL TEXT UNDER SUBHEADINGS THEREIN BEFORE SETUP OR USE OF THIS PRODUCT.

⚠ WARNING! TO PREVENT SERIOUS INJURY:

Operate only with proper spark arrestor installed.

⚠ WARNING!

Operation of this equipment may create sparks that can start fires around dry vegetation. A spark arrestor may be required.

The operator should contact local fire agencies for laws or regulations relating to fire prevention requirements.

⚠ CAUTION! TO PREVENT SERIOUS INJURY FROM ACCIDENTAL STARTING: Make sure that the Engine is switched OFF, wait for the Engine to cool, and unplug the spark plug wire before performing any procedure in this section.

At high altitudes, the engine's carburetor, governor (if so equipped), and any other parts that control the fuel-air ratio will need to be adjusted by a qualified mechanic to allow efficient high-altitude use and to prevent damage to the engine and any other devices used with this product.

PRORUN

PACKAGE CONTENTS

PART	DESCRIPTION
A	ENGINE (BACKPACK ASSY)
B	FLEXIBLE TUBE
C	EXTENSION TUBE
D	SCREEN BAFFLES (2)
E	HOSE CLAMP (2)
F	THROTLE CABLE CLIP
G	MIXING CONTAINER
H	MULTI-TOOL
I	OPERAOR'S MANUAL

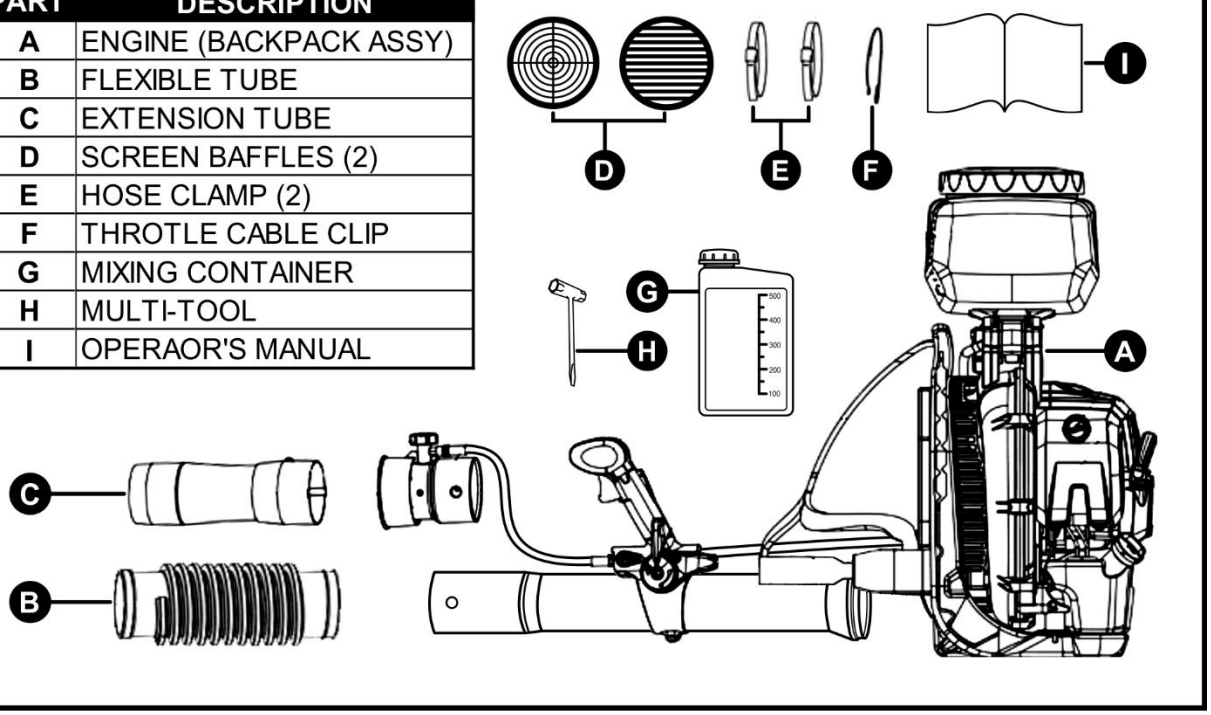

COMPONENTS AND CONTROLS

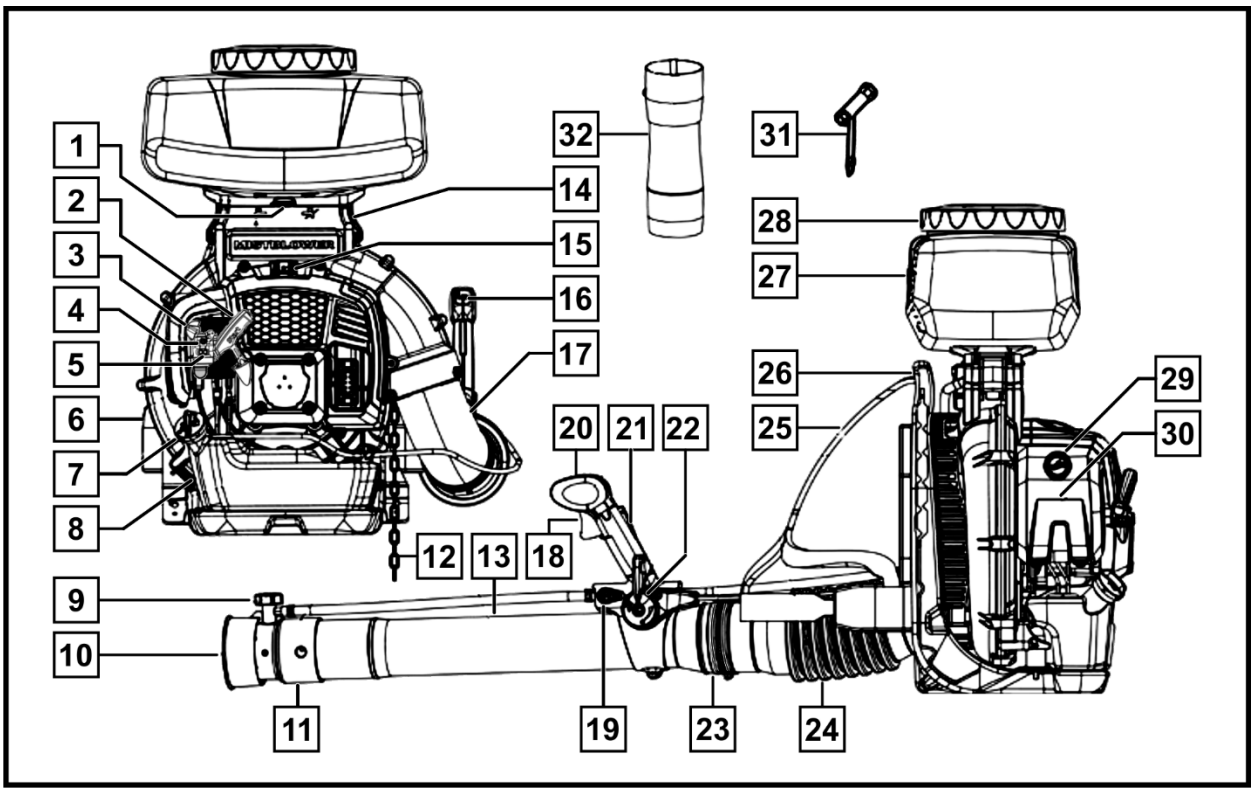

1. Diversion Intake
Shift to operate in mist blowing mode or dusting and spreading mode.
2. Starter Handle
Starter grip handle, pull to start the engine.
3. Choke Knob
Provides proper fuel-starting mixture when the engine is cold.
4. Idle Screw
Adjusts the engine idle speed.
5. Low/High Speed Screw
Adjusts the engine's speed.
6. Primer Bulb
Provides additional fuel feed when starting.
7. Fuel Tank Cap
Closes and seals the fuel tank.
8. Fuel Tank
Holds the petrol and oil mixture.
9. Liquid Metering Knob
For varying the liquid discharge rate.
10. Baffle Screen
To vary the direction and shape of the spray.
11. Nozzle
Mounted on air tube, directs airstream.
12. Antistatic Chain
Reduces the risk of sparkling when applying dry substances.
13. Air Tube
Directs the airstream and support the handle.
14. Locking Handle
Fixes the chemical tank in position onto the adapter.
15. Spark Plug Cap
Connects the spark plug with the ignitor cable.

16. Engine Switch
For stopping the engine. Toggle the engine switch to the “O” position. Release the switch and it automatically returns to the start position "I"

17. Elbow Tube
Connects the flexible tube to the engine assembly.

18. Throttle Trigger
Controls the speed of the engine.

19. Liquid Valve Lever
Opens and closes spray liquid hose.

20. Control Handle
Holds and directs the tube in the required directions. Held by the right hand.

21. Throttle Trigger Lockout
Must be depressed before the throttle trigger can be activated.

22. Dust Metering Lever
Controls varying the discharge rate.

23. Locking Clip
For securing the tubes.

24. Flexible Tube
Allows for blowing in the desired direction.

25. Harness
For carrying the unit.

26. Backpack Frame
Helps protect the user’s back and support the machine.

27. Chemical Tank
Contains the material to be sprayed.

28. Lid
For closing and sealing the container.

29. Air Filter Cover Screw
Fixes the air filter cover

30. Air Filter Cover
Protect the air filter element.

31. Spark Plug Wrench
For Spark plug maintenance and initial installation.

32. Extension Air Tube (Optional)
Extend the air tube.

ASSEMBLY

⚠ WARNING! UNPACKING AND COMPLETING THE ASSEMBLY SHOULD BE DONE ON A FLAT AND STABLE SURFACE, WITH ENOUGH SPACE FOR MOVING THE MACHINE AND ITS PACKAGING, ALWAYS MAKING USE OF SUITABLE EQUIPMENT.

1. **INSTALL THE BAFFLE SCREEN**
   - Insert the baffle screen (10) into the nozzle (11) until it clicks into position.

Refer to Figure 3

Fig 3

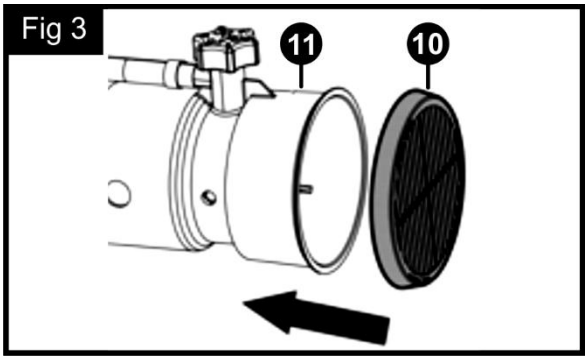

2. INSTALL THE NOZZLE

- Insert the nozzle (11) onto the air tube (13) until the pin (13A) slides into the hole (11A).

Refer to Figure 4

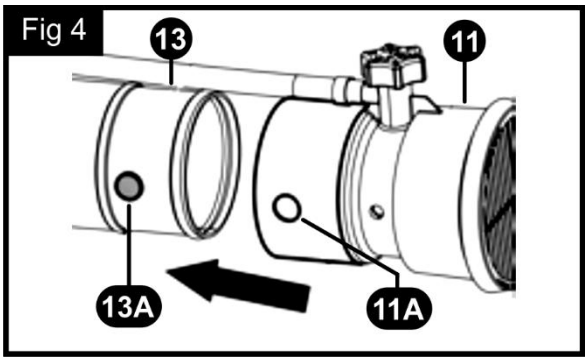

3. CONNECTING THE AIR TUBE

- Position the hose clamp (23) onto the flexible tube. (24)
- Insert the air tube (13) into the flexible tube (24).

Refer to Figure 5

- Fasten securely by using the multi-tool (31) to turn the lock screw clockwise and tighten the hose clamp (23).

Refer to Figure 6

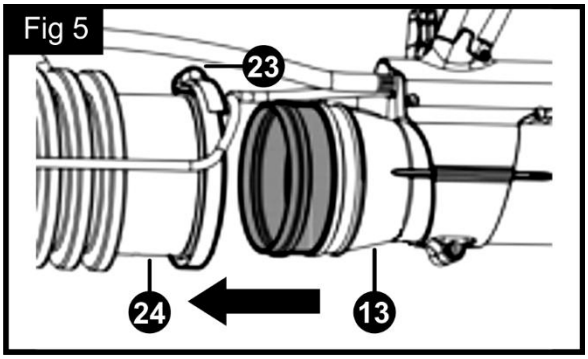

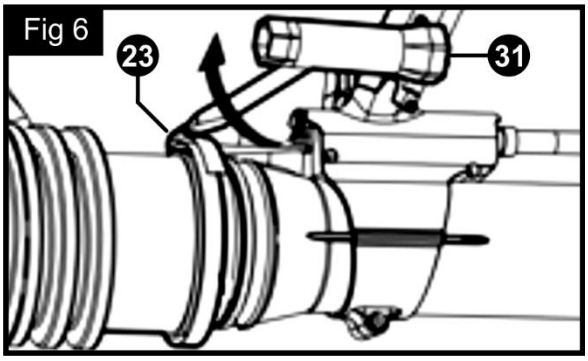

4. CONNECTING THE ANTISTATIC CHAIN

- Attach the antistatic wire (12A) and chain (12) onto the blower housing with the screw (A).

Refer to Figure 7

- Push the antistatic wire (12A) into the flexible tube.

Refer to Figure 8

Fig 7

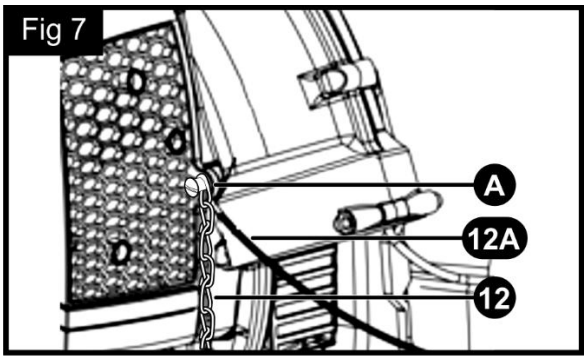

Fig 8

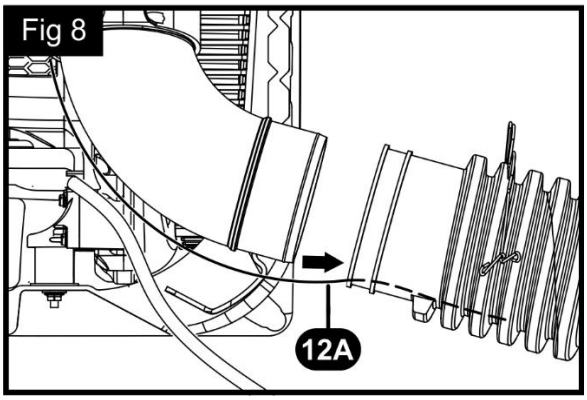

5. CONNECTING THE FLEXIBLE TUBE

- Position the hose clamp (23) onto the flexible tube. (24)
- Insert the elbow tube (17) into the flexible hose (24) to the end.

Refer to Figure 9

- Fasten securely by using the multi-tool (31) to turn the lock screw clockwise and tighten the hose clamp (23).

Refer to Figure 10

Fig 9

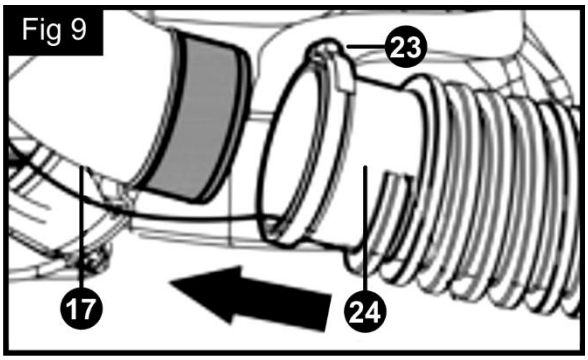

Fig 10

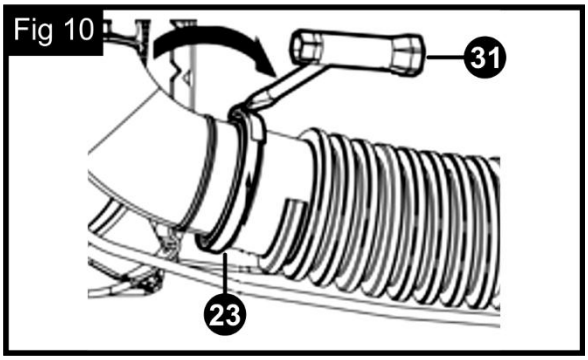

NOTE LUBRICATE THE TUBES A LITTLE TO FACILITATE ASSEMBLY.

6. FIXING THE THROTTLE CABLE

- Fit the throttle cable and liquid hose into the throttle cable clip, and then hook the clip on the flexible tube (24).

Refer to Figure 11

Fig 11

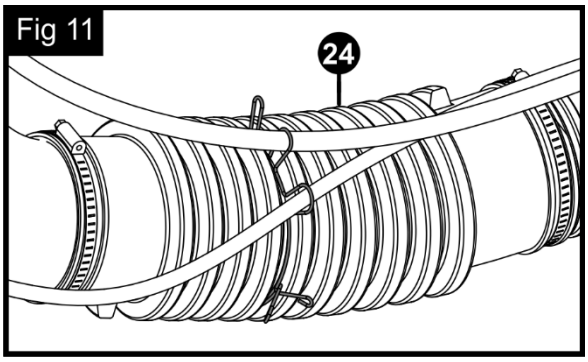

PREPARING TO WORK

CHECK THE MACHINE

Before starting work please:

- Check that all the screws on the machine are tightly fastened.
- Check that the air filter is clean.
- Check that vibration absorbers are fine.
- Prepare accessories and make sure they are correctly mounted.
- Fill with fuel as indicated below.

PREPARING THE FUEL MIXTURE

NOTE THIS MACHINE IS FITTED WITH A TWO-STROKE ENGINE WHICH REQUIRES A MIXTURE OF PETROL AND LUBRICATING OIL WITH A FUEL / OIL MIX RATIO OF 50:1.

⚠ CAUTION! USING PETROL ALONE WILL DAMAGE THE ENGINE AND IS A CAUSE FOR THE INVALIDATION OF THE WARRANTY.

⚠ CAUTION! USE ONLY QUALITY FUELS AND OILS TO MAINTAIN HIGH PERFORMANCE AND GUARANTEE THE DURATION OF THE MECHANICAL PARTS OVER TIME.

CHECKING AND FILLING FUEL

⚠ WARNING!  **PETROL AND THE FUEL / OIL MIXTURE ARE HIGHLY INFLAMMABLE!**

- **Keep the petrol and fuel mixture in homologated fuel chemical tanks, in a safe place, away from any flames or heat sources.**
- **Never leave the chemical tanks within the reach of children.**
- **Never smoke whilst preparing the mixture and avoid inhaling petrol fumes.**

⚠ WARNING! **TO PREVENT SERIOUS INJURY FROM FIRE:**
Fill the fuel tank in a well-ventilated area away from ignition sources. If the engine is hot from use, shut the engine off and wait for it to cool before adding fuel. Do not smoke.

1. Clean the Fuel Tank Cap and the area around it.
2. Unscrew and remove the Fuel Tank Cap.

NOTE **DO NOT USE GASOLINE CONTAINING MORE THAN 10% ETHANOL (E10). DO NOT USE E90 ETHANOL. ADD FUEL STABILIZER TO THE GASOLINE OR THE WARRANTY IS VOID.**

NOTE **DO NOT USE GASOLINE THAT HAS BEEN STORED IN A METAL FUEL CONTAINER OR A DIRTY FUEL CONTAINER.**
It can cause particles to enter the carburetor, affecting engine performance and/or causing damage.

⚠ IMPORTANT! **UNLEADED PETROL TENDS TO CREATE DEPOSITS IN THE CHEMICAL TANK IF PRESERVED FOR MORE THAN 2 MONTHS ALWAYS USE FRESH PETROL!**

⚠ IMPORTANT! **YOUR WARRANTY IS VOID IF THE ENGINE'S FUEL TANK IS NOT FILLED WITH THE PROPER MIXTURE (50:1) OF UNLEADED GASOLINE AND 2-CYCLE OIL BEFORE EACH USE.**
2-Stroke oil (conventional, mineral-based, synthetic) must meet either JASO M345 FD or ISO-L-EGD requirements for air-cooled engines. Before each use, check the fuel level. Do not run the engine with an improper unleaded gasoline / 2-cycle oil mixture. Running the engine with an improper mixture WILL permanently damage the engine.

3. To obtain the proper gasoline and 2-cycle oil mixture, mix 50:1 gas-to-oil ratio: 2.56 oz oil per 1 gallon (20 ml oil per 1 liter gasoline) of gasoline into an approved container. Then gently agitate the container to thoroughly mix the gasoline / 2-cycle oil.
   See Figure 9

Fig 12

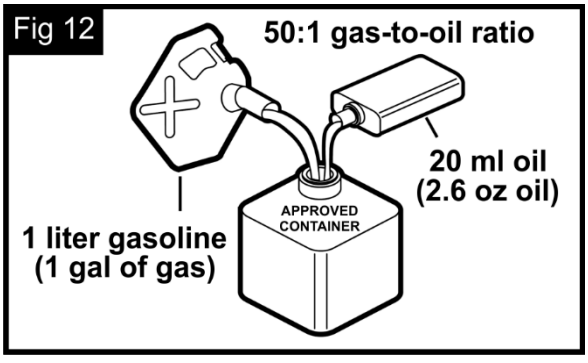

4. If needed, fill the Fuel Tank to about 1 inch under the fill neck of the Fuel Tank with the pre-mixed unleaded gasoline / 2-cycle oil mixture.

5. Then close the fuel tank with the fuel tank cap.
6. Wipe up any spilled fuel and allow excess to evaporate before starting the engine. To prevent FIRE, do not start the engine while the smell of fuel hangs in the air.
7. Use caution when handling fuel. Move the blower at least 3 meters (10 feet) from the fueling point before starting the engine.

⚠ IMPORTANT! THE FUEL / OIL MIXTURE TENDS TO AGE. DO NOT PREPARE EXCESSIVE AMOUNTS OF THE FUEL MIXTURE TO AVOID THE FORMATION OF DEPOSITS.

⚠ IMPORTANT! KEEP THE PETROL AND FUEL / OIL MIXTURE CONTAINERS SEPARATE AND EASILY IDENTIFIABLE TO AVOID THE MISTAKE OF USING ONE IN PLACE OF THE OTHER.

⚠ IMPORTANT! PERIODICALLY CLEAN THE PETROL AND FUEL MIXTURE CONTAINERS TO REMOVE ANY EVENTUAL DEPOSITS.

PREPARING THE FUEL MIXTURE

⚠ WARNING! NEVER SMOKE WHILE REFUELING AND AVOID INHALING THE FUEL / OIL MIXTURE FUMES.

BEFORE REFUELING:
- Place the machine on a fat stable surface with the fuel tank cap facing upwards.
- Clean the fuel tank cap and the surrounding area to avoid any dirt from entering the tank during refilling.
- Carefully open the fuel tank cap to allow the pressure inside to decrease gradually.

TO FUEL:
- Agitate the tank with the fuel / oil mixture well.
- Using a funnel to pour an amount of fuel mixture suited to the work to be performed in the supplied graduated bottle.
- Do not overfill. Leave a minimum of 0.20 inch (5 mm) of space between the top of the fuel-oil mixture and the inside edge of the tank to allow for expansion.

Refer to Figure 13

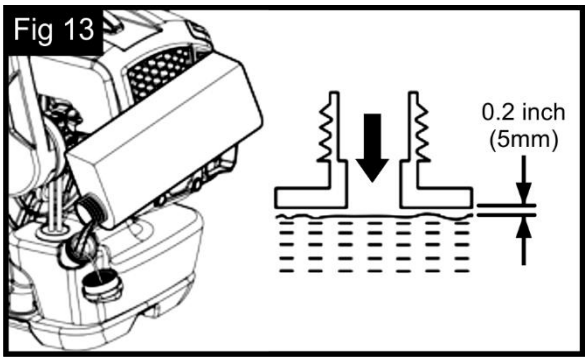

⚠ WARNING! ALWAYS CLOSE THE FUEL TANK CAP FIRMLY.
Immediately clean all traces of fuel which may have dripped on the machine or the ground and do not start the engine until the petrol fumes have dissipated.

PREPARING THE CHEMICAL

CALCULATING REQUIRED QUANTITY OF SOLUTION

NOTE CONVERSTIONS
- 1 Foot = 0.3048 Meters
- 1 Liter = 0.264172 Gallons

1. DETERMINING SURFACE AREA (M2)
- In the case of ground crops, simply multiply the length of the field by its width.
- The surface area of high-growing plants is calculated approximately by measuring the length of the rows and the average height of the foliage. The result is multiplied by the number of rows and then by two if both sides have to be treated.

EXAMPLE:
A field 100 meters long and 30 meters wide has to be treated with a pesticide.

AREA:
A= 100 m×30 m=3000 m^2

2. DETERMINING QUANTITY OF ACTIVE INGREDIENT
REFER TO THE INSTRUCTIONS SUPPLIED WITH THE ACTIVE INGREDIENT TO DETERMINE:
- Required quantity of active ingredient for 1 m^2.
- Concentration of active ingredient (mix ratio).
- Multiply the required quantity of active ingredient for 1 m^2 by the area determined in m^2. The result is the quantity of active ingredients required for the area to be treated.

EXAMPLE:
According to the maker's instructions, 0.0005 Liters of active ingredient are required per 1 m^2 to obtain a concentration of 1%.

QUANTITY OF ACTIVE INGREDIENT:
0.0005 (L / m^2) X 3000 (m^2) = 1.5 Liters

3. DETERMINING QUANTITY OF SOLUTION

THE QUANTITY OF SOLUTION REQUIRED IS CALCULATED AS FOLLOWS:

$$\frac{T_W}{K} \times 100 = T_B$$

- **T_W = Quantity of active ingredient in Liters**
- **K = Concentration in %**
- **T_B = Required quantity of solution in Liters**

EXAMPLE:

The calculated quantity of active ingredients is 1.5 Liters. According to the maker's instructions, the concentration is 1%.

QUANTITY OF SOLUTION:

$$\frac{1.5 \text{ Liters}}{1\%} \times 100 = 150 \text{ Liters}$$

4. DETERMINING WALKING SPEED

CARRY OUT A TRIAL RUN WITH THE MACHINE FUELED AND THE CONTAINER FILLED WITH WATER:

- Operate the spray tube (swing it back and forth) as for the real run described below.
- Determine the distance walked in one minute.
- Also use the trial run to check the selected working width. The best working width for low-growing crops is 4 to 5 meters. Mark the working width with stakes.
- Dividing the distance walked in meters by the time in minutes gives you the walking speed in meters per minute (m / min).

EXAMPLE:

The distance covered in one minute is 10 meters. Walking speed:

$$\frac{10 \text{ meters}}{1 \text{ minute}} = 10 \text{ (m / min)}$$

5. DETERMINING DISCHARGE RATE

THE SETTING OF THE METERING UNIT IS CALCULATED AS FOLLOWS:

$$\frac{V_a \text{ Liters} \times v_b \text{ (m / min)} \times b \text{ (m)}}{A \text{ (m}^2\text{)}} = V_c \text{ (L / min)}$$

- **V_a = Quantity of solution**
- **v_b = Walking speed**
- **V_c = Discharge rate**
- **b = Working width**
- **A = Area**

EXAMPLE:

The values determined above and a working width of 20 meters require the following setting on the metering unit:

$$\frac{150 \text{ Liters} \times 10 \text{ (m / min)} \times 6 \text{ meters}}{3000 \text{ (m}^2\text{)}} = 3 \text{ (L / min)}$$

NOTE TO ADJUST THE REQUIRED DISCHARGE RATE SEE "METERING UNIT".

METERING UNIT

LIQUID VALVE LEVER

SOLUTION FEED IS STARTED AND STOPPED WITH THE LIQUID VALVE LEVER (19).

- Position (valve lever vertical) – OPEN
- Position (valve lever horizontal) – CLOSED

Refer to Figure 14

Fig 14

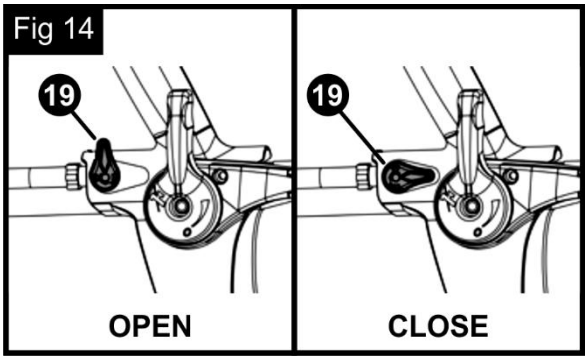

⚠ WARNING! MAKE SURE THE LIQUID VALVE LEVER IS CLOSED BEFORE STARTING ENGINE.

CLOSE THE LIQUID VALVE LEVER IMMEDIATELY AFTER FINISHING THE SPRAY OPERATION.

LIQUID METERING KNOB

THE LIQUID METERING KNOB CONTROLS THE SCOPE OF SUPPLY AND ALLOWS A WIDE RANGE OF DIFFERENT DISCHARGE RATES.

LIQUID METERING KNOB WITH POSITIONS 1 TO 6

Rotate the metering knob for infinitely variable discharge rate:

- Position 1 = minimum flow rate
- Position 6 = maximum flow rate

The numbers on the metering knob must be lined up with the lug (A) under the knob.
Refer to Figure 15

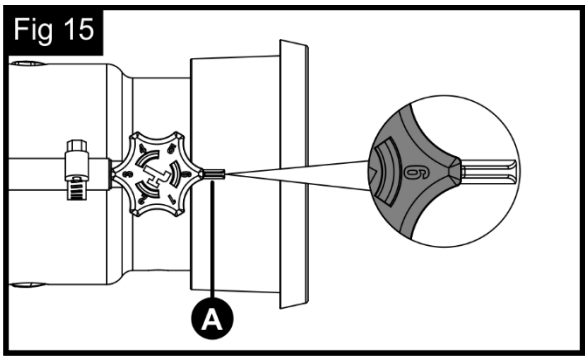

LIQUID DISCARGE RATE (L / min)

Knob Settings	Spray Tube Angle -30°	0°	30°
1	0.7	0.6	0.5
2	1.0	0.8	0.65
3	1.8	1.5	1.25
4	2.5	2.1	1.9
5	3.2	2.6	2.3
6	3.8	3.3	2.8

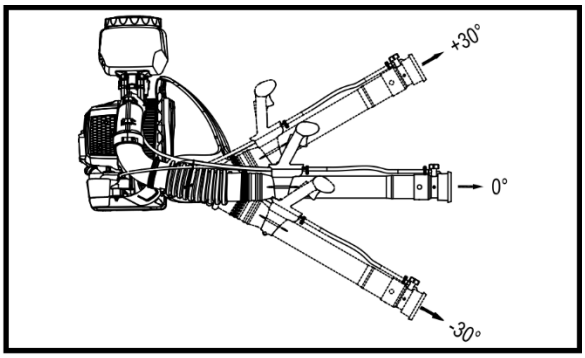

DUST METERING LEVER

The Discharge Rate is infinitely variable with the metering lever (19).

- (Metering lever vertical) – Feed CLOSED
- (Metering level parallel to blower tube) – Feed OPEN

Refer to Figure 16

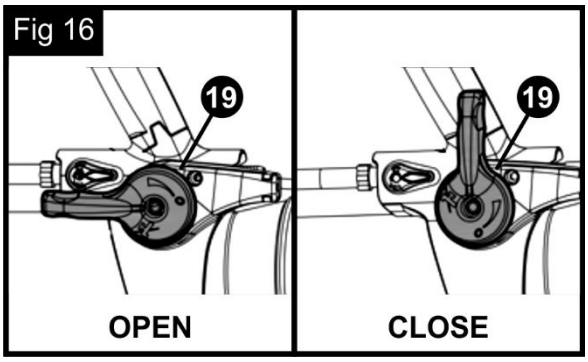

NOTE THE DISCHARGE RATE IS DEPENDENT ON THE DENSITY AND GRAIN SIZE OF THE PRODUCT USED.

- **GRANULATE: 0 - 9 Kg / min**
- **POWDER: 0-3 Kg / min**

CONVERSION FROM MIST BLOWING TO DUSTING AND SPREADING MODE

1. Open the liquid valve lever to drain the chemical tank and then clean the tank.
2. Close the liquid valve lever and the dust metering lever.
3. Pull the strainer upward and out of the chemical tank.

Refer to Figure 17

4. Squeeze the tabs(14a) together and pull the locking handle (14) outwards.

Refer to Figure 18

5. Remove the chemical tank from the adaptor and turn over it.

Refer to Figure 19

Fig 17

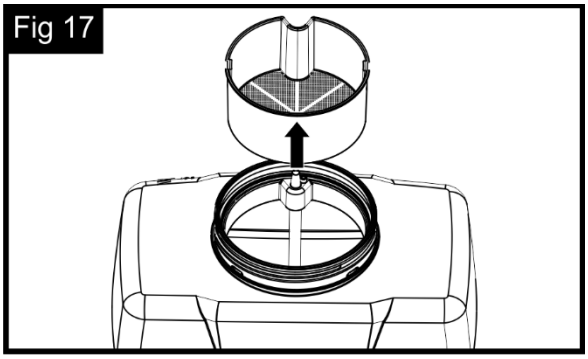

Fig 18

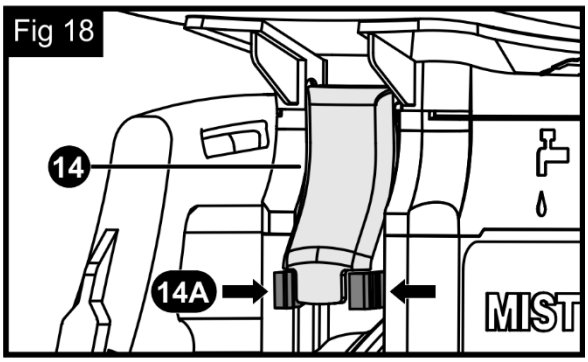

Fig 19

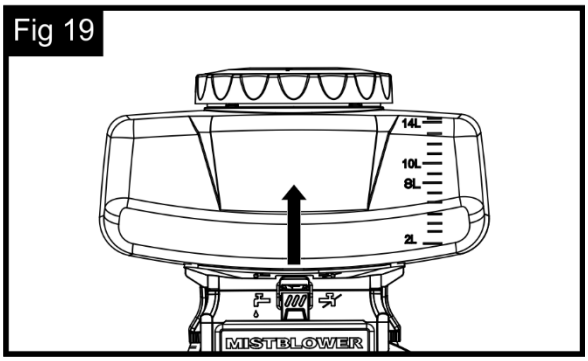

6. The selected operating mode is indicated by the symbols on the metering unit's housing.
7. Pull out the diversion intake (1) and turn it 180°.
8. Align the channel (1a) to the selected mode marking on the chemical tank (27).

MIST BLOWING MODE
Refer to Figure 20

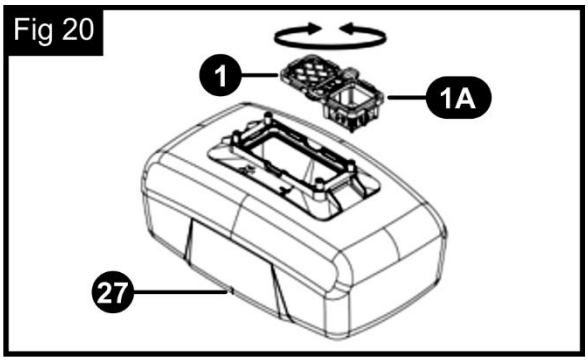

DUSTING and SPREADING MODE
Refer to Figure 21

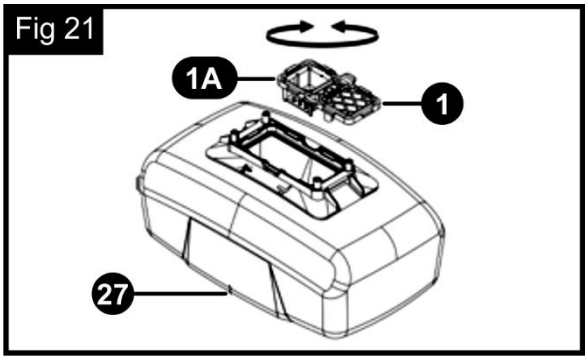

9. Thoroughly clean the plastic pins on the chemical tank and the sealing face on the diversion intake and check that there is no residue.
10. Thoroughly clean the holes and the sealing face on the adaptor and check that there is no residue.

11. Hook the handles (14) over the bar (14b) on the solution container.

Refer to Figure 22

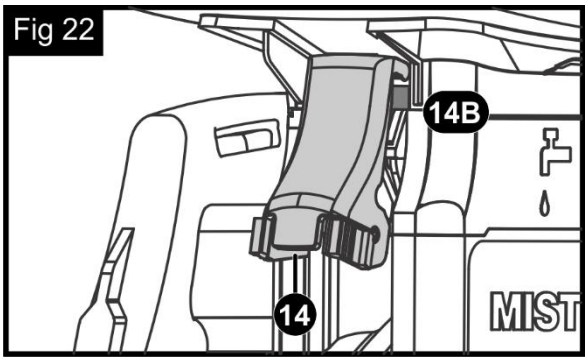

12. Press the handles (14) down until the tabs (14a) snap into their seats on the housing with a loud click.
Refer to Figure 23

Fig 23

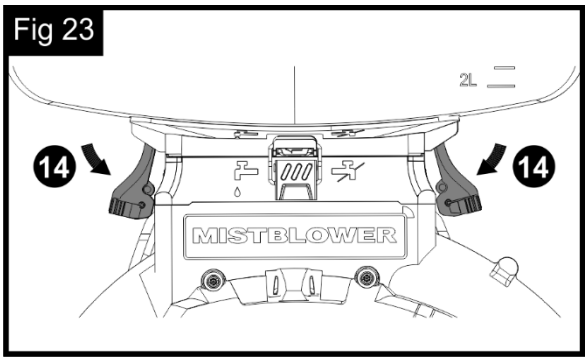

13. Check that the container is firmly seated.
Refer to Figure 24

Fig 24

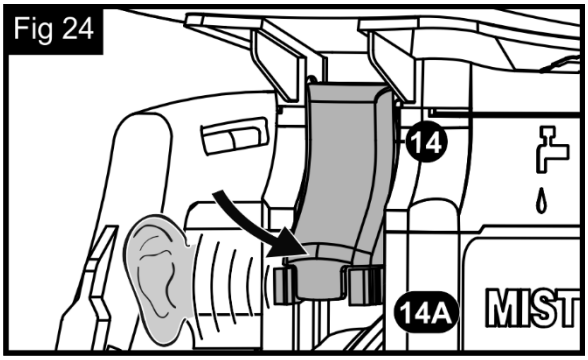

FILLING THE CHEMICAL TANK

MIST BLOWING MODE

1. Close the liquid valve lever.
2. Inspect the gasket (28a) in the lid must be in good condition, lubricated with grease and clean.

Refer to Figure 25

Fig 25

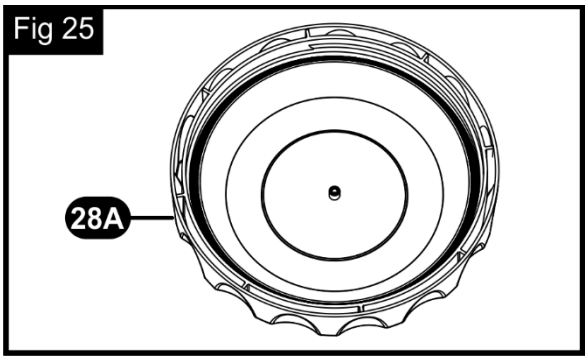

3. Pour thoroughly mixed spray solution into the container through the strainer.

Refer to Figure 26

Fig 26

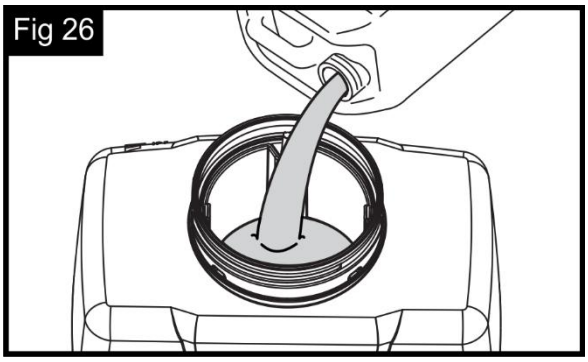

4. Do not exceed maximum level of 14 liters (arrow).

Refer to Figure 27

Fig 27

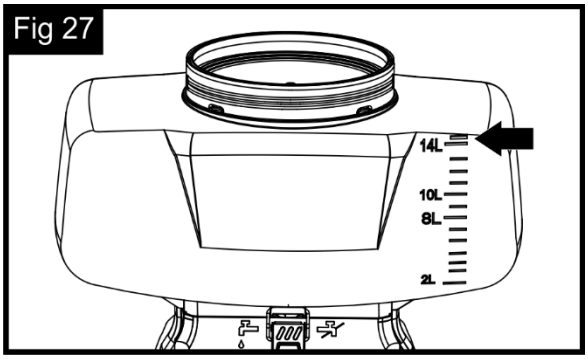

5. Fit the lid and tighten it down firmly.

DUSTING AND SPREADING MODE

1. Close dust metering lever.
2. Pull the strainer upward and out of the chemical tank.
3. Pour the material into the container.
4. Fit the lid and tighten it down firmly.

7. OPERATION

STARTING THE MACHINE

BEFORE STARTING

1. Before starting the engine, place the machine on stable ground and make sure blowing are not crushed.
2. With the engine stopped and before starting, check the air intakes between the backpack frame and power head for blockages and clean if necessary.
3. Close the Liquid Valve (19) lever for solution feed.

Refer to Figure 28

4. Close the Dust Metering Lever (22) for dusting and spreading mode.

Refer to Figure 29

5. Start your unit on a clean, dust-free surface only to ensure that no dust is sucked in.

Fig 28

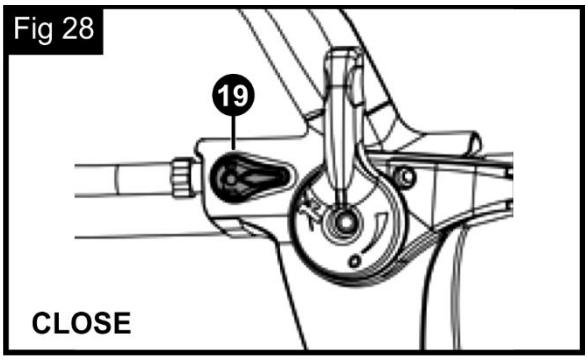

Fig 29

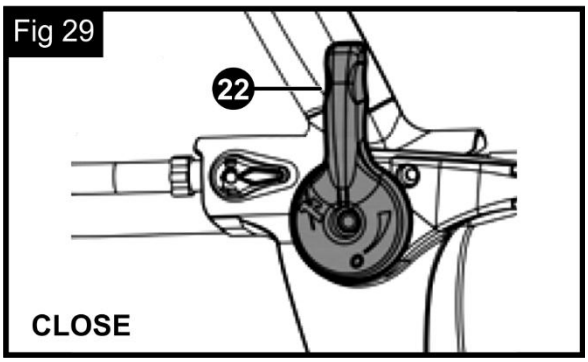

COLD STARTING

A “cold” start of the engine means starting it following at least 10 minutes from when it was switched off or after refueling.

1. Turn the choke knob (3) clockwise to «CHOKE» position

Refer to Figure 29

Fig 29

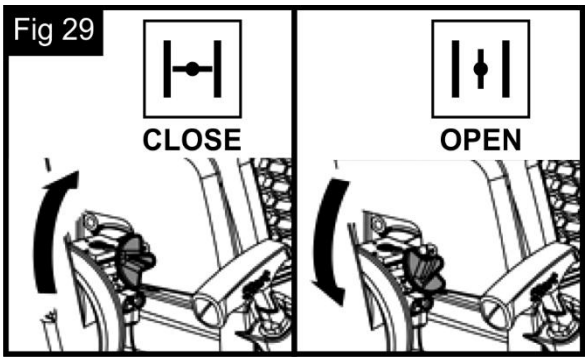

2. Press the primer bulb (6) 7 to 10 times to prime the carburetor

Refer to Figure 30

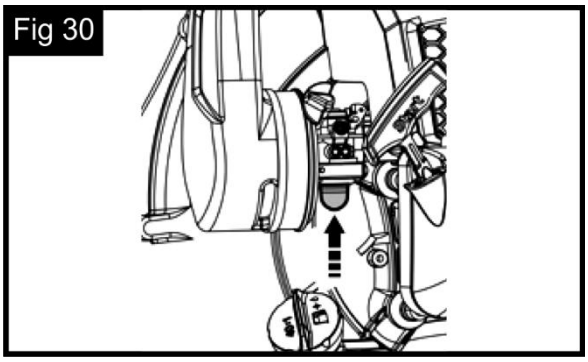

3. Hold the machine firmly with left hand on the engine, in order not to lose control of the ma chine during starting
4. Pull the starter handle (2) slowly for 10 - 15 cm until you feel some resistance, then tug it hard a few times until you hear the first firing occur

Refer to Figure 31

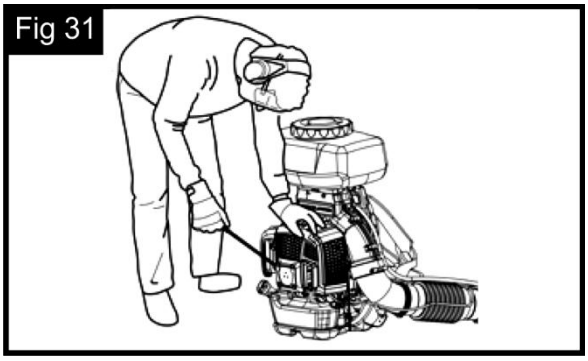

⚠ IMPORTANT! TO AVOID BREAKING THE STARTER ROPE, DO NOT PULL THE WHOLE LENGTH OF IT OR LET IT SLIDE ALONG THE EDGE OF THE CABLE GUIDE HOLE. RELEASE THE STARTER GRADUALLY, TO AVOID LETTING IT FLY BACK UNCONTROLLABLY.

5. Turn the choke knob (3) counterclockwise to the «OPEN» position.

Refer to Figure 29

6. Pull the starter handle (2) again until the engine starts

Refer to Figure 31

7. When the engine has started, allow the engine to run at idle for 10 seconds.
8. Rev the engine a little using the throttle trigger (18) to warm it up before using the machine.

⚠ IMPORTANT! IF THE STARTER ROPE IS PULLED REPEATEDLY WITH THE CHOKE ENGAGED, IT MAY FLOOD THE ENGINE AND MAKE STARTING DIFFICULT.

IF YOU HAPPEN TO FLOOD THE ENGINE, FOLLOW BELOW PROCEDURE:

1. Set the ignition switch to the «STOP» position “O”.
2. Turn the choke counterclockwise to the «OPEN» position.
3. Remove the spark plug and dry it.
4. Pull the recoil starter handle slowly several times to drain the fuel from the combustion chamber.
5. Wait until fuel vapors and refit the spark plug.
6. Start the engine as described previously.

HOT STARTING

To start the engine immediately after it has stopped, follow steps 2 - 3 - 5 - 6- 7 of the above procedure.

1. Press the primer bulb (6) 7 to 10 times to prime the carburetor

Refer to Figure 30

2. Hold the machine firmly with left hand on the engine, in order not to lose control of the ma chine during starting
3. Turn the choke knob (3) counterclockwise to the «OPEN» position.

Refer to Figure 29

4. Pull the starter handle (2) again until the engine starts

Refer to Figure 31

5. When the engine has started, allow the engine to run at idle for 10 seconds.

ADJUSTING THE SPEED

Press and release the throttle trigger (18) located on the control handle (20) to regulate the rotor's RPM and adjust the flow of materials to the work being conducted.

STOPPING THE ENGINE

TO STOP THE ENGINE:

1. Close the liquid valve lever and dust metering lever, release the throttle trigger, allow the engine run at idle for 10 seconds.
2. Move the engine switch (16) to the "O" position.
3. After pressing the engine switch, the switch automatically returns to the start position "I"

Refer to Figure 32

Fig 32

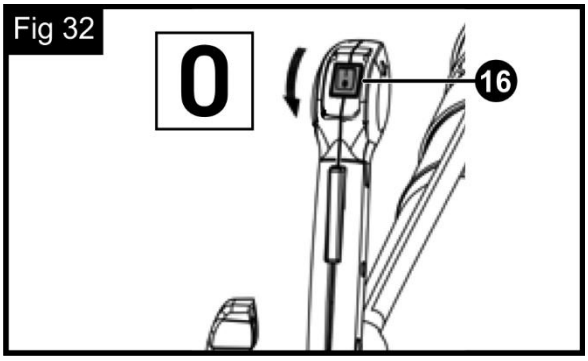

OPERATING THE MIST BLOWER

⚠ WARNING! THE MACHINE IS CARRIED AS A BACKPACK. HOLD AND CONTROL THE BLOWER TUBE WITH YOUR RIGHT HAND ON THE CONTROL HANDLE.

STORING FOR A SHORT PERIOD:

6. Wait for the engine to cool down.
7. Keep the machine in a dry place, well away from sources of ignition, until you need it again.
8. For longer out-of-service periods – see "Storing the Machine".

BLOWER MODE

REMOVE THE BAFFLE SCREEN.

Engine speed should be adjusted to the type of material to be removed:

- Use the engine at low speed for lightweight material and small bushes on the lawn.
- Use the engine at average speed to move grass and lightweight leaves on pavement or solid ground.
- Use the engine at high speed for heavier materials like fresh snow or voluminous dirt.
- Hold the opening of the blower as close to the ground as possible. Utilize the entire length of the blow pipe to keep the air current close to the ground.

MIST BLOWING MODE

DIFFERENT BAFFLE SCREENS CAN BE FITTED TO ALTER THE SHAPE AND DIRECTION OF THE SPRAY FOR ACCURATE APPLICATION OF THE SOLUTION.

- The dust metering lever must be closed when operating in the mist blowing mode.
- Adjust discharge rate with the liquid metering knob.
- Open the liquid valve lever and close the dust metering lever.

WITHOUT DEFLECTOR SCREEN

Spray jet for long distances – maximum spraying range.

- For spraying high plants and large areas.
- For maximum penetration of foliage.

Refer to Figure 33

Fig 33

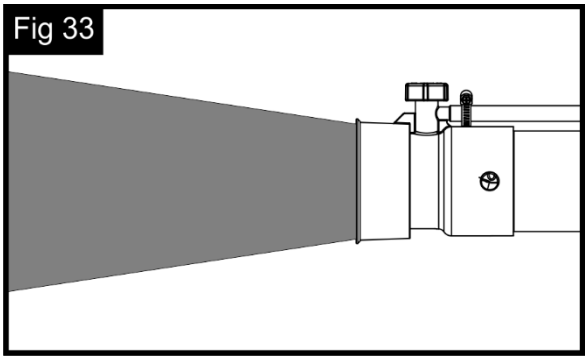

FAN JET BAFFLE SCREEN

Spray is broadened and softened.

- For treating plants at close a range of less than 5 feet (<1.5 m).
- Reduces damage to plants, especially in sensitive phases of plant growth.

Refer to Figure 34

Fig 34

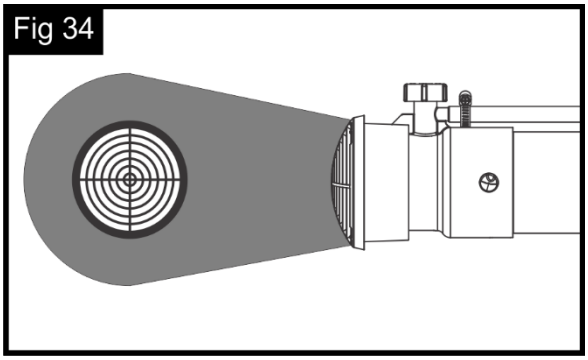

45° DEFLECTOR SCREEN

Diverts spray jet at an angle of 45°

- For under-leaf treatment.
- To increase discharge rate when spraying upwards.
- For targeted treatment of low-growing crops. Helps reduce the problem of spray mist being carried away by the wind when spraying downwards.

Refer to Figure 35

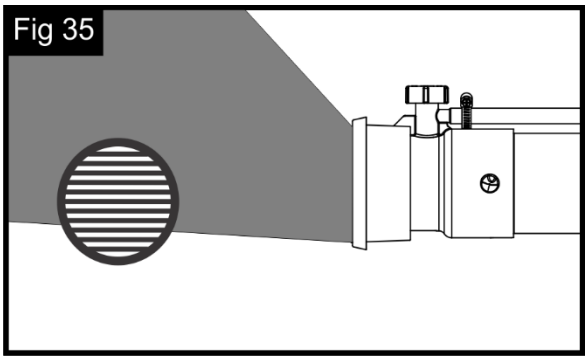

DUSTING AND SPREADING MODE

1. Remove the baffle screen.
2. Open the dust metering lever and close the liquid valve lever.

Refer to Figure 36

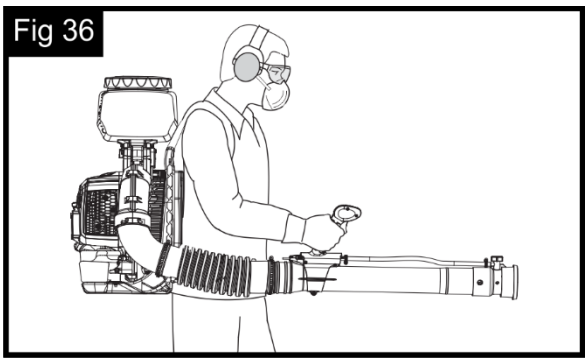

END OF OPERATIONS

EMPTYING THE CHEMICAL TANK

1. Close the liquid valve lever.
2. Shut off the engine.
3. Turn the liquid metering knob (9) to position "6" and open the liquid valve lever to collect the remaining solution in a suitable container.

Refer to Figure 37

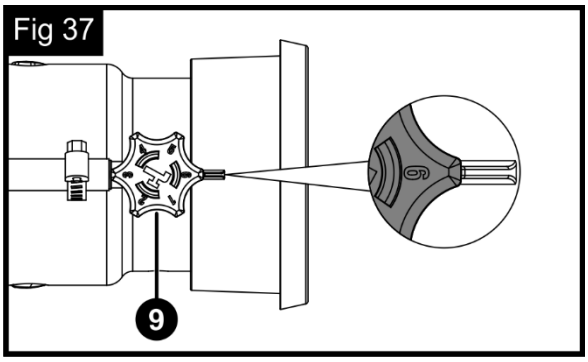

CLEANING THE CHEMICAL TANK

1. Rinse and clean the solution container and hose system with clear water.
2. Dispose of remaining spray solution and rinsing liquid in accordance with local environmental requirements – follow maker's instructions.
3. Allow the machine to dry with the cap removed.

IF STRAINER IS DIRTY:

1. Pull the strainer upward and out of the solution container.

Refer to Figure 38

2. Clean the strainer with clear water and a brush.

Refer to Figure 39

Fig 38

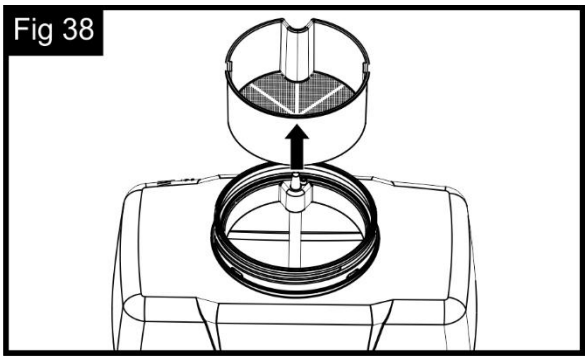

Fig 39

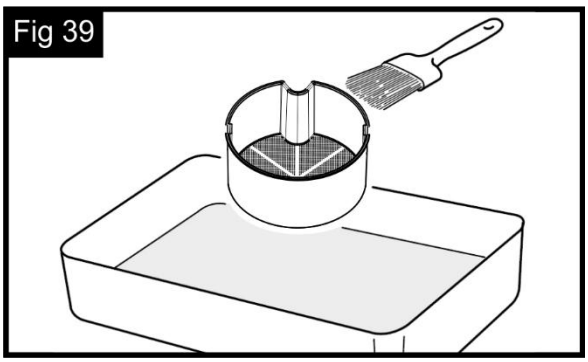

AFTER DUSTING AND SPREADING

1. Run the unit until the chemical tank is completely empty
2. Close the dust metering lever.
3. Shut off the engine
4. Rinse and clean the chemical tank with clear water.
5. Dispose of any residual rinsing solution in accordance with environmental requirements – follow instructions of the chemical manufacturer.
6. Allow the machine to dry with the cap removed.

8. MAINTENANCE

MAINTENANCE AND STORAGE SAFETY REGULATIONS

⚠ WARNING! BEFORE CLEANING OR DOING MAINTENANCE WORK, DISCONNECT THE SPARK PLUG CAP AND READ THE RELEVANT INSTRUCTIONS. WEAR PROPER CLOTHING AND PROTECTIVE GLOVES WHENEVER YOUR HANDS ARE AT RISK.

⚠ WARNING! NEVER USE THE MACHINE WITH WORN OR DAMAGED PARTS.

Faulty or worn-out parts must always be replaced and not repaired. Only use original spare parts: the use of non-original and/or incorrectly fitted parts will jeopardize the machine and impair safety, may cause accidents or personal injuries for which the Manufacturer is under no circumstance liable or responsible.

- Use only identical manufacturer replacement parts for maintenance and repair. Use of unauthorized parts may cause serious or fatal injury.
- Strictly follow the maintenance and repair instructions in the appropriate section in this instruction manual. Please refer to the maintenance chart in this instruction manual.
- Always stop the engine and make sure that the fan is stopped before doing any maintenance or repair work or cleaning the power tool.
- Do not attempt any maintenance or repair work not described in this instruction manual. Have such work performed by a PRORUN approved servicing dealer only.
- Use the specified spark plug and make sure it and the ignition lead are always clean and in good condition. Always press spark plug boot snugly onto spark plug terminal of the proper size. A loose connection between spark plug terminal and the ignition wire connector in the boot may create arcing that could ignite combustible fumes and cause a fire.
- Do not operate your power tool if the muffler is damaged, missing, or modified. An improperly maintained muffler will increase the risk of fire and hearing loss. Your muffler is equipped with a spark-arresting screen to reduce the risk of fire; never operate your power tool if the screen is missing, damaged or clogged. Remember that the risk of a brush or forest fire is greater in hot or dry weather.
- Tighten all nuts, bolts and screws except the carburetor adjustment screws after each use.
- Store the power tool in a dry and high or locked location out of reach of children.

⚠ CAUTION! ANY ADJUSTMENTS OR MAINTENANCE OPERATIONS NOT DESCRIBED IN THIS MANUAL MUST BE CARRIED OUT BY A PRORUN APPROVED SERVICE CENTRE WITH THE NECESSARY KNOWLEDGE AND EQUIPMENT TO ENSURE THAT THE WORK IS DONE CORRECTLY MAINTAINING THE MACHINE'S ORIGINAL SAFETY LEVEL.

Any operations performed in unauthorized centers or by unqualified persons will totally invalidate the Warranty and all obligations and responsibilities of the Manufacturer.

- Keep all nuts and screws tight to be sure the machine is always in safe working condition. Routine maintenance is essential for safety and for maintaining a high performance level.
- Do not perform any work on the machine that is not described in this manual unless adequately skilled with appropriate tools.
- Do not store the machine with fuel in the tank in an area where the fuel vapors could reach an open frame, a spark or a strong heat source.
- Allow the engine to cool down before storing the machine in any enclosure.
- To reduce fire hazards, keep the engine, exhaust silencer and fuel storage area free from sawdust, branches, leaves, or excessive grease; never leave chemical tanks with the debris inside the storage area.
- If the fuel tank has to be emptied, this should be done outdoors once the engine has cooled down.
- Wear work gloves when performing all maintenance.
- Before putting the machine away, check you have removed wrenches or tools used for maintenance.

ROUTINE MAINTENANCE

⚠ WARNING! CORRECT MAINTENANCE IS ESSENTIAL TO MAINTAIN THE ORIGINAL EFFICIENCY AND SAFETY OF THE MACHINE OVER TIME.

DURING MAINTENANCE OPERATIONS:
- Remove the spark plug cap.
- Wait until the engine is sufficiently cold.
- Wear protective gloves.
- Do not work on the machine if not in possession of the necessary skills and tools.

STORAGE
- After every working session, clean the machine thoroughly to remove all dust and debris, and repair or replace any faulty parts.
- The machine must be stored in a dry place away from the elements.

CYLINDER AND MUFFLER
- To reduce fire risks, periodically clean the cylinder fins with compressed air and clear the muffler area of dust, leaves, or other debris.

STARTING SYSTEM
- To avoid overheating and damage to the engine, always keep the cooling air vents clean and free of sawdust and debris.
- The starter rope must be replaced as soon as it shows signs of wear.

NUS AND SCREWS
- Periodically check that all the nuts and screws are securely tightened, and the handgrips are tightly fastened.

AIR FILTER

⚠ IMPORTANT! CLEANING THE AIR FILTER IS ESSENTIAL TO GUARANTEE THE EFFICIENCY AND DURATION OF THE MACHINE.
Do not work with a damaged filter or without a filter, as this could permanently damage the engine.
The air filter must be cleaned after every 8-10 working hours.

CLEAN THE FILTER AS FOLLOWS:

1. Loosen the lock knob (29), remove the cover (30), air filter (30a).
2. Gently tap the filter element to remove the dirt and clean it with pressure compressed air.
3. Clean the paper filter with pressure air.
4. Refit the sponge filter, paper filter and cover and tighten the lock knob. Make sure the paper filter is on the bottom, and the sponge filter is on the top.

Refer to Figure 40

Fig 40

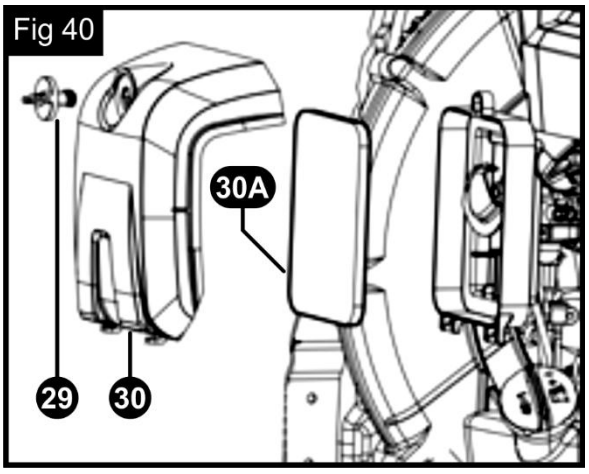

CHECKING THE SPARK PLUG

- Periodically remove and clean the spark plug using a metal brush to get rid of any deposits. Check and reset the correct distance between the electrodes.
- Replace the spark plug and fasten it firmly using the supplied wrench.
- The spark plug must be replaced with one with the same characteristics whenever the electrodes have burnt or the insulation has worn, and in any case every 100 working hours.

Refer to Figure 41

Fig 41

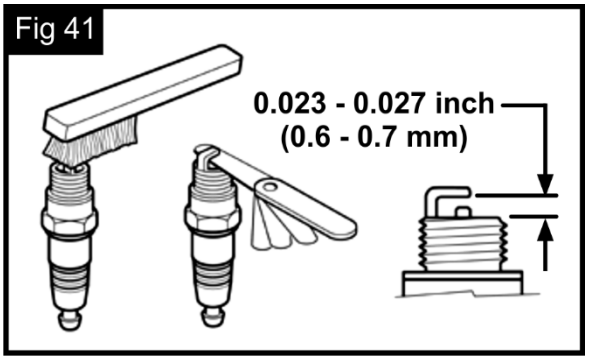

CARBURETTOR ADJUSTMENTS

⚠ IMPORTANT! WHEN THE ENGINE TENDS TO SWITCH OFF OR THERE IS NOT MUCH DIFFERENCE IN SPEED WHEN USING THE THROTTLE TRIGGER, IT IS RECOMMENDED TO ADJUST THE CARBURETION SETTINGS.
This operation must be performed by a PRORUN approved service center only.

LONG PERIODS OF DISUSE

⚠ IMPORTANT! IF THE MACHINE WILL NOT BE USED FOR A PERIOD OF MORE THAN 23 MONTHS IT IS RECOMMENDED TO FOLLOW THESE LISTED PRECAUTIONS TO AVOID DIFFICULTY WHEN YOU NEXT USE THE MACHINE AND TO PREVENT PERMANENT DAMAGE TO THE ENGINE.

MAINTENANCE SCHEDULE

WHAT TO DO WHEN…										
The following intervals apply to normal operating conditions only. If your daily working time is longer or operating conditions are difficult (very dusty work area, etc.), shorten the specified intervals accordingly.		Before Starting Work	After Finishing Daily Work	After Each Refueling Stop	Weekly	Monthly	Every 12 Months	If There is an Issue	If Damaged	If Required
Complete Machine	Visual inspection (condition, wear, leaks)	X		X						
	Clean		X							
Control Handle	Check operation	X		X						
Air Filter	Clean				X			X		X
	Replace								X	X
Fuel Filter	Check					X		X		
	Replace filter[1)]						X		X	
Carburetor	Check idle setting		X							
	Readjust idle									X
Spark Plug	Clean and readjust electrode gap every 10 working hours							X		
	Replace after 100 hours of operation								X	
Strainer	Check and clean	X	X							
Cooling Inlets	Clean		X							
All Accessible Screws	Check					X		X		
	Retighten							X		X
Anti-Vibration System	Check	X						X		X
	Replace[1)]								X	
Safety Labels	Replace								X	
Muffler	Clean[1)]							X		

1) PRORUN recommends that this work be done by a PRORUN approved servicing dealer or qualified persons. Use only the spare parts recommended by PRORUN.

EXTRAORDINARY MAINTENANCE

- This work must be done exclusively by a PRORUN approved service center.
- All and any operations performed in unauthorized service centers or by unqualified persons will totally invalidate the warranty.

FUEL FILTER

- Inside the fuel tank there is a filter which prevents impurities from entering the engine.
- The filter should be replaced once a year, contact PRORUN Customer Service or a PRORUN approved Service Center.

CARBURETTOR ADJUSTMENTS

- Turn the idle screw (4) clockwise the idle speed increase.
- Turn the idle screw (4) counterclockwise the idle speed decrease.

Refer to Figure 42

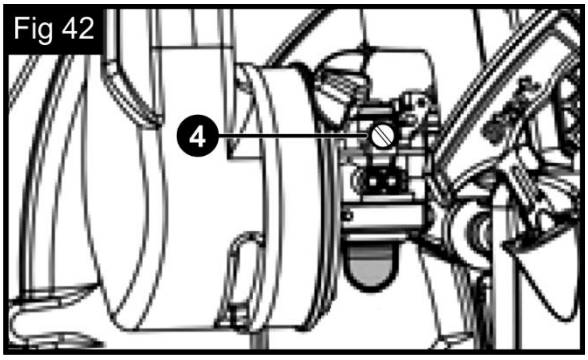

- The carburetor is tuned by the manufacturer to achieve maximum performance in all situations, with a minimum emission of toxic gas in compliance with the regulations in force.
- In the case of poor performance, contact PRORUN Customer Service or a PRORUN approved Service Center.

9. STORAGE & TRANSPORT

TRANSPORTATION AND HANDLING

Whenever the machine is to be handled or transported you must:

- Turn off the engine and disconnect the spark plug cap.
- Only hold the machine using the handgrips and position the tubes so that they do not obstruct.

⚠ CAUTION! WHEN USING A VEHICLE TO TRANSPORT THE MACHINE, FASTEN IT FIRMLY IN PLACE TO AVOID IT FROM TIPPING OVER, WHICH MAY CAUSE DAMAGE OR FUEL SPILLAGE.

ENVIRONMENTAL PROTECTION

⚠ IMPORTANT! ENVIRONMENTAL PROTECTION SHOULD BE A PRIORITY OF CONSIDERABLE IMPORTANCE WHEN USING THE MACHINE, FOR THE BENEFIT OF BOTH SOCIAL COEXISTENCE AND THE ENVIRONMENT IN WHICH WE LIVE.

⚠ IMPORTANT! TRY NOT TO CAUSE ANY DISTURBANCE TO THE SURROUNDING AREA.

⚠ IMPORTANT! NEVER DISPOSE OF RESIDUAL CHEMICALS OR CONTAMINATED RINSING SOLUTIONS IN WATERWAYS, DRAINS, SEWERS, STREET GUTTERS OR MANHOLES.

⚠ IMPORTANT! DISPOSAL OF CONTAMINATED RINSE SHOULD BE IN ACCORDANCE WITH ALL APPLICABLE LAWS, REGULATIONS AND ORDINANCES. OBSERVE THE PRECAUTIONARY INSTRUCTIONS OF THE CHEMICAL MANUFACTURER.

- Strictly comply with local regulations and provisions for the disposal of oils, petrol, damaged parts or any elements which have a strong impact on the environment; this waste must not be disposed of as normal waste, it must be separated and taken to specified waste disposal centers where the material will be recycled.
- Strictly comply with local regulations and provisions for the disposal of waste materials.
- At the time of decommissioning, do not pollute the environment.

STORAGE

Before putting the machine away:

- Drain and clean the fuel tank in a well-ventilated area.
- Start the engine and run it idle until it comes to a halt so that it uses up all the fuel that is left in the carburetors.

NOTE RUN THE ENGINE UNTIL THE CARBURETOR IS DRY. THIS HELPS PREVENT THE CARBURETOR DIAPHRAGMS STICKING TOGETHER.

- Allow the engine to cool down and remove the spark plug cap.
- Store the machine in a dry, high or locked location sheltered from frost.
- Keep the machine out of the reach of children and other unauthorized persons.
- Thoroughly clean the machine, paying special attention to the cylinder fins and air filter.

RESTARTING WORK

When you wish to start using the machine again:

- Replace the spark plug cap.
- Prepare the machine as indicated in the paragraph entitled “Preparing to work”.

10. TROUBLESHOOTING

ISSUE	PROBLEM SOURCE	CORRECTIVE ACTION
The engine will not start or will not keep running.	Incorrect starting procedure.	Follow the instructions under OPERATIONS / STARTING THE MACHINE.
	Dirty spark plug or incorrect distance between the electrodes.	Check the spark plug. Follow the instructions under MANTENANCE.
	Air filter is clogged	Clean or replace air filter. Follow the instructions under MANTENANCE.
	Carburation problems.	Contact PRORUN Customer Service.
	Intake grill open.	Close the intake grill.
	Blower tube not fitted.	Fit the tube correctly.
The engine starts but is lacking in power.	Air filter is clogged.	Clean or replace air filter. Follow the instructions under MANTENANCE.
	Carburation problems	Contact PRORUN Customer Service.
The engine runs irregularly and lacks in power when revved.	Dirty spark plug or incorrect distance between the electrodes.	Check the spark plug. Follow the instructions under MANTENANCE.
	Check the spark plug. Follow the instructions under MANTENANCE.	Check the spark plug. Follow the instructions under MANTENANCE.
The engine makes too much smoke.	Incorrect composition of the fuel mixture.	Prepare the fuel mixture according to the instructions under SET UP.
	Carburation problems.	Contact PRORUN Customer Service.
The machine starts to vibrate abnormally.	Damaged or loose parts.	Stop the machine and disconnect the spark plug cable. Inspect for damage. Check for and tighten any loose parts. Have all checks, repair work and replacements carried out by PRORUN approved Service Center.

11. EXPLODED VIEWS AND PARTS

STARTER ASSEMBLY

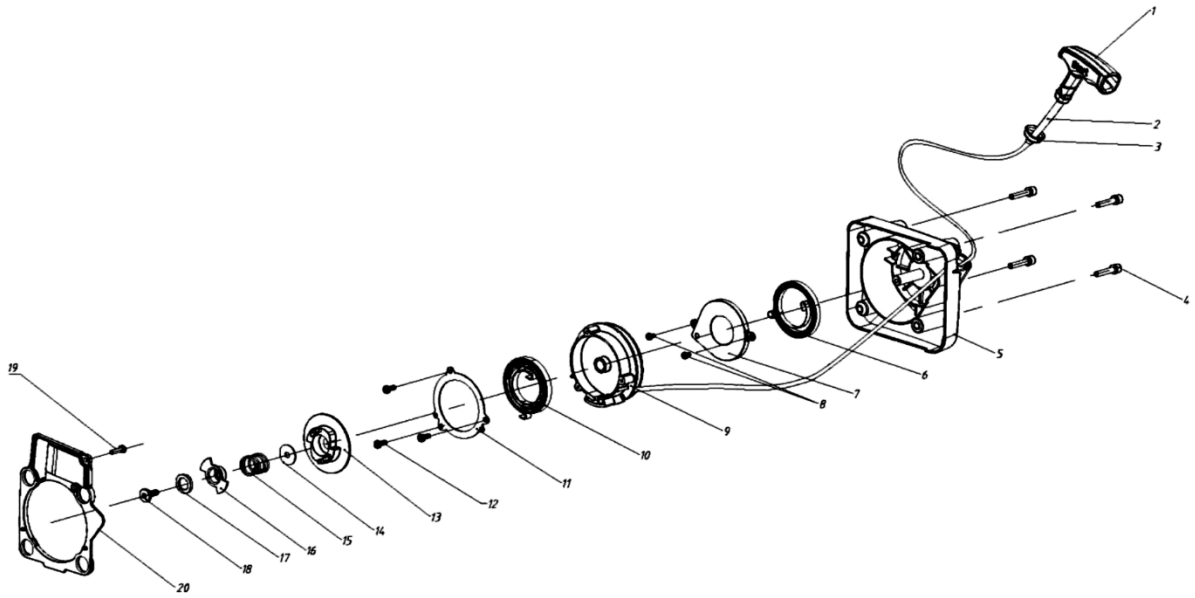

NO	PART NAME	QTY	PART #
1	STARTER HANDLE	1	20057165
2	STARTER CORD	1	20054676
3	CORD SHEATH	1	20054603
4	HEX CAP SCREW M5 X 25	4	20061082
5	STARTER COVER	1	20060261
6	STARTER COIL SPRING	1	20060185
7	COIL SPRING COVER	1	20069080
8	SELF-TAPPING SCREWS ST3.5 X 6GB	2	20051733
9	STARTER ROPE WHEEL	1	20060179
10	LARGE COIL SPRING	1	20060184

NO	PART NAME	QTY	PART #
11	LARGE COIL SPRING PLATE	1	20060183
12	SELF-TAPPING SCREW ST4 X 10	3	20051790
13	STARTING RATCHET	1	20060180
14	FLAT WASHER 5.5 X 20 X 1	1	20062799
15	SPRING	1	20060181
16	RATCHET COVER	1	20060182
17	WEAR PADS	1	20060186
18	STARTER SCREW	1	20062800
19	PAN HEAD SCREWS M4	1	20054538
20	HIGH PRESSURE SPACER	1	20060142

PRORUN

ENGINE ASSEMBLY

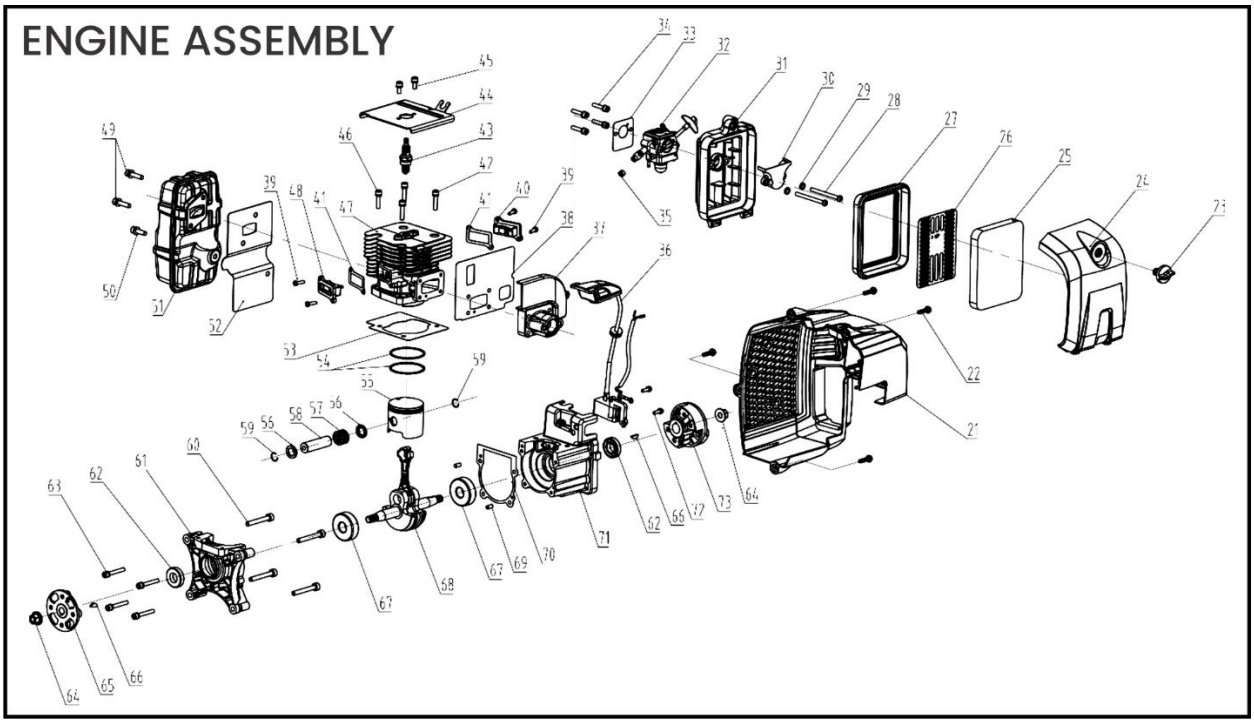

NO	PART NAME	QTY	PART #
21	CYLINDER COVER	1	20069134
22	SELF-TAPPING SCREWS ST5.7 X 20	4	20062565
23	AIR FILTER LOCK NUT	1	20056357
24	AIR FILTER COVER	1	20069914
25	AIR FILTER ELEMENT	1	20060768
26	OIL RETAINER PLATE	1	20060767
27	FILTER ELEMENT HOLDER	1	20071650
28	HEX HEAD SCREWS M5 X 60	2	20060886
29	ϕ5 FLAT WASHER	1	20054561
30	AIR INLET ELBOW	1	20069916
31	AIR FILTER HOLDER	1	20069917
32	CARBURETOR	1	20055603
33	CARBURETOR GASKET	1	20051447
34	HEX HEAD SCREWS M5 X 30	4	20061084
35	THROTTLE CABLE CAP	1	20060761
36	HIGH PRESSURE PACK ASSEMBLY	1	20076570
37	INTAKE PIPE	1	20071599
38	INTAKE PIPE GASKET	1	20051446
39	HEX HEAD SCREWS M4	4	20060942
40	CYLINDER REAR SIDE COVER	1	20071596
41	SIDE COVER GASKET	2	20051444
42	HEX HEAD SCREW M5 X 22	3	20081903
43	SPARK PLUG	1	20050486
44	AIR GUIDE PLATE	1	20060141
45	HEX HEAD SCREWS M5 X 12	2	20061111
46	HEX HEAD SCREWS M5 X 20	1	20081902
47	CYLINDER	1	20071598

NO	PART NAME	QTY	PART #
48	CYLINDER FRONT SIDE COVER	1	20071595
49	HEXAGON HEAD SCREW M6 X 25	2	20061116
50	HEX HEAD SCREW M6 X 20	1	20061120
51	MUFFLER	1	20092692
52	MUFFLER GASKET	1	20051448
53	CYLINDER GASKET	1	20051445
54	PISTON RING	2	20076275
55	PISTON	1	20088466
56	NEEDLE ROLLER BEARING RING	2	20062794
57	NEEDLE ROLLER BEARING ϕ12 X ϕ16 X 15	1	20062795
58	PISTON PIN	1	20088467
59	PISTON PIN RETAINING RING	2	20088115
60	HEX HEAD SCREWS M6 X 45	4	20062790
61	FRONT HALF CRANKCASE	1	20071600
62	OIL SEAL ϕ15 X ϕ30 X 7	2	20070315
63	HEX SCREW, SPRING, WASHER M5 X 35	4	20061125
64	HEX NUT M10 X 1.25	2	20061338
65	CONNECTION DISK	1	20071597
66	SEMICIRCULAR KEY 3 X 5 X 13	2	20061664
67	BEARING 6302	2	20061602
68	CRANKSHAFT CONNECTING ROD SET	1	20088122
69	CYLINDRICAL PIN B5 X 10	2	20054566
70	CASE GASKET	1	20051449
71	REAR HALF CRANKCASE	1	20071601
72	PAN SCREW, SPRING, WASHER M4 X 14	2	20061121
73	FLYWHEEL ASSEMBLY	1	20051453

FRAME ASSEMBLY

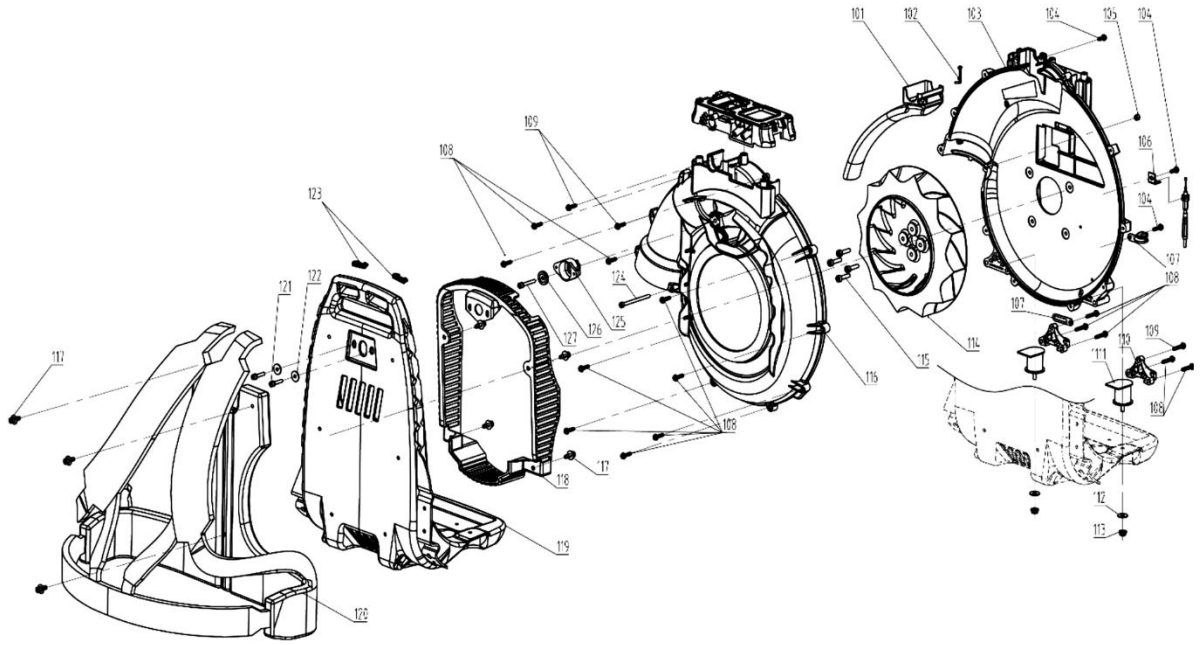

NO	PART NAME	QTY	PART #
101	DOWN POWDER TUBE	1	20060769
102	LOWER POWDER SEAL VOLUTE GASKET	1	20071652
103	REAR HALF VOLUTE	1	20069925
104	SELF-TAPPING SCREWS ST5.7 X 16	3	20062589
105	HEX NUT M5	1	20054558
106	THROTTLE LINE BRACKET	1	20079388
107	THROTTLE CORD CLAMP	2	20058131
108	SELF-TAPPING SCREWS ST5.7 X 25	14	20062617
109	SELF-TAPPING SCREWS ST5.7×20	3	20062565
110	ANTI-BREAKAWAY COVER	2	20060189
111	SHOCK ABSORB RUBBER CASTING	2	20060193
112	LARGE WASHERS ϕ6.4 X 18 X 1.5	2	20061460
113	HEX NUT M6	2	20061406
114	IMPELLER	1	20069103

NO	PART NAME	QTY	PART #
115	HEX HEAD SCREW M6 X 25 - 10.9	4	20061044
116	FRONT HALF VOLUTE	1	20069923
117	SCREW EXPANSION BUCKLE	7	20060251
118	PROTECTIVE FRAME	1	20069129
119	BACK FRAME	1	20071614
120	BACK CUSHION	1	20071659
121	HEX HEAD SCREW M5 X 20	2	20054552
122	FLAT WASHER ϕ5.5 X 18 X 1.5	2	20062674
123	BACK PAD HANGING BUCKLE	2	20060250
124	HEX HEAD SCREWS M5 X 70	1	20062801
125	SHOCK ABSORBING DISK CASTING	1	20060192
126	WITH RUBBER GASKET	1	20071608
127	HEX SCREW, SPRING, WASHERS M5 X 35	1	20061125

PRORUN

BLOWTUBE AND HANDLE ASSEMBLY

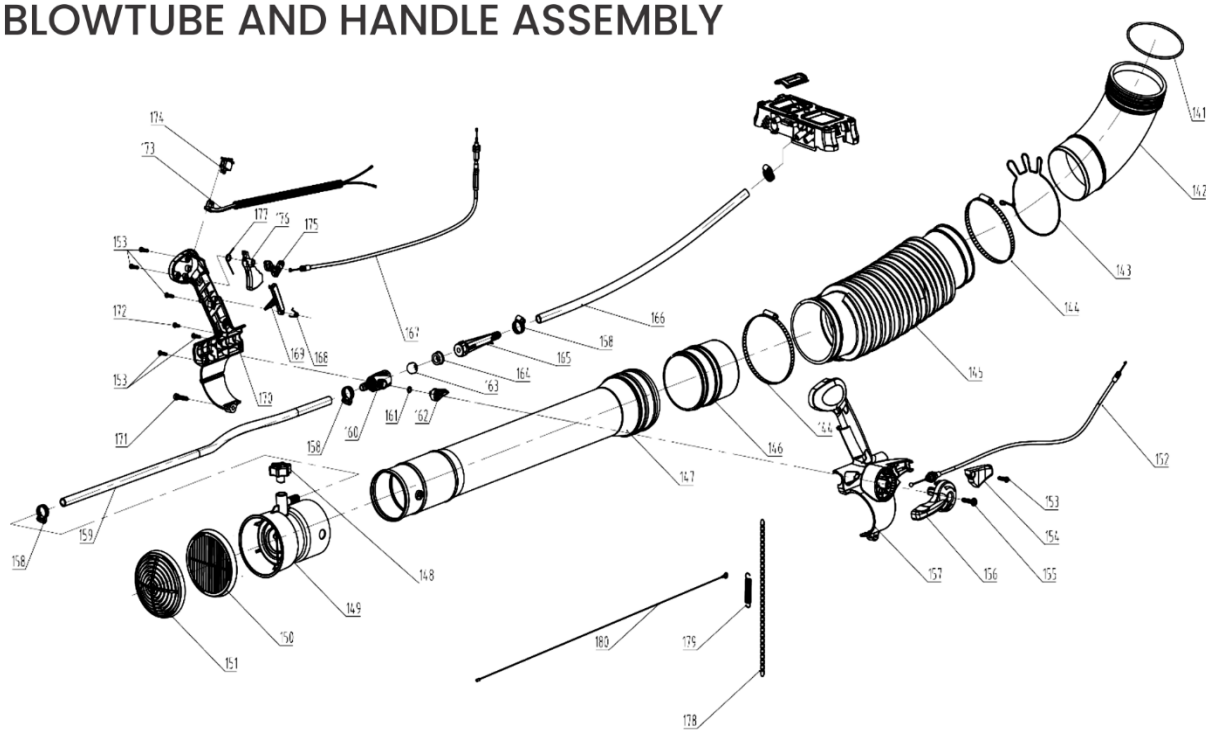

NO	PART NAME	QTY	PART #
141	O-RING 100 X 3.5	1	20055804
142	BEND	1	20069088
143	BELLOWS CLAMP RING	1	20060766
144	STEEL CLAMP (ϕ100 - ϕ120)	2	20060254
145	EXPANSION PIPE	1	20071609
146	SUPPORT PIPE	1	20071613
147	DUCT	1	20060795
148	MIST SWITCH	1	20060790
149	MIST DISPENSER	1	20060796
150	V-MIST CAP	1	20060793
151	FLOWER MIST COVER	1	20060792
152	LOWER POWDER PULL WIRE	1	20060774
153	SELF-TAPPING SCREWS ST4 X 16	6	20051793
154	PULL WIRE HANDLE COVER	1	20069928
155	SELF-TAPPING SCREW, GASKET ST5.7 X 27	1	20062843
156	LOWER POWDER KNOB	1	20060779
157	HANDLE LEFT COVER	1	20069935
158	STEEL CLAMP (ϕ10 - ϕ16)	3	20060794
159	FRONT WATER PIPE	1	20055794
160	WATER VALVE SHORT PIPE	1	20060799

NO	PART NAME	QTY	PART #
161	O-RING 7 X 1.5	1	20071657
162	WATER VALVE KNOB	1	20060801
163	VALVE SPOOL	1	20060800
164	WATER SWITCH SEAL	1	20071658
165	WATER VALVE LONG TUBE	1	20060798
166	REAR WATER HOSE	1	20055794
167	THROTTLE CABLE	1	20050371
168	CONTROL ARM TORSION SPRING	1	20060782
169	TRIGGER CONTROL ARM	1	20069933
170	HANDLE RIGHT COVER	1	20069937
171	SELF-TAPPING SCREW ST5.7 X 25	1	20062617
172	SELF-SCREW ST4 X 10	1	20051790
173	FLAME FAILURE WIRING HARNESS	1	20051678
174	IGNITION OFF SWITCH	1	20050386
175	THROTTLE CABLE HANGING PLATE	1	20069930
176	TRIGGER	1	20069931
177	TRIGGER TORSION SPRING	1	20060783
178	GROUND CHAIN	1	20060765
179	ADJUSTMENT TENSION SPRING	1	20060763
180	CONDUCTIVE CHAIN	1	20060762

FUEL TANK ASSEMBLY

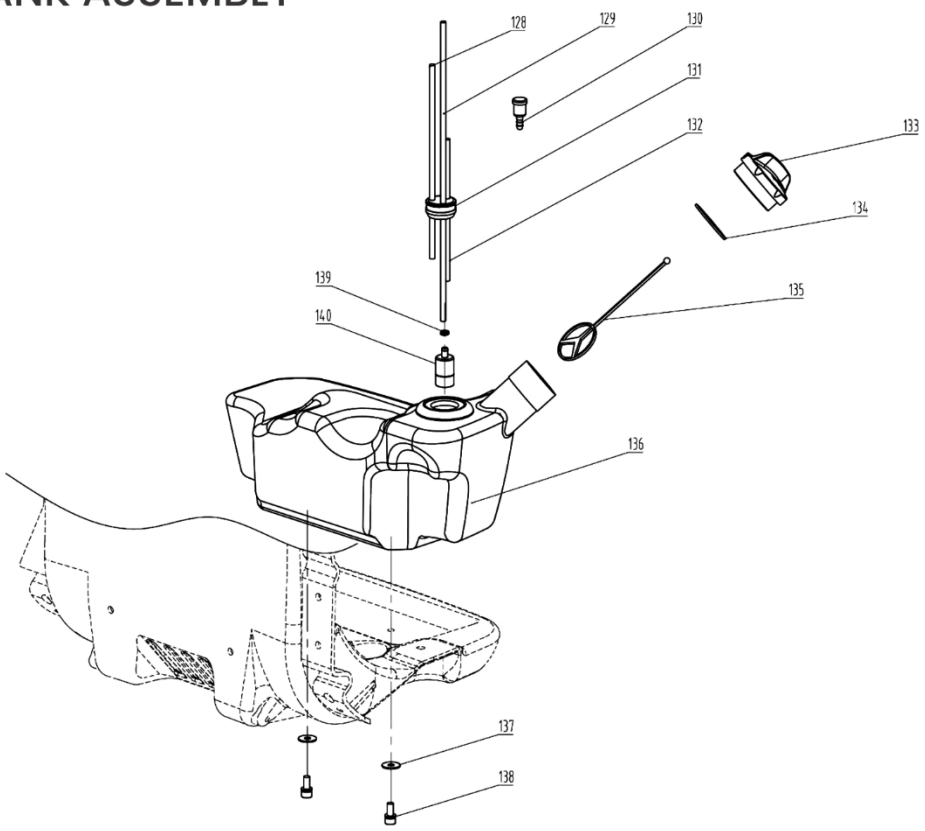

NO	PART NAME	QTY	PART #
128	TRANSPARENT FUEL HOSE 160MM	1	20054576
129	FUEL HOSE 2.5 X 5 X 390MM	1	20055779
130	BALANCER PARTS	1	20054685
131	FUEL HOSE HOLDER	1	20070349
132	FUEL HOSE 2.5 X 5 X 70MM	1	20055779
133	FUEL TANK COVER	1	20058996
134	SEALING GASKET	1	20070351

NO	PART NAME	QTY	PART #
135	ANTI-DROP PLATE	1	20059012
136	FUEL TANK	1	20060176
137	LARGE WASHER ϕ5 X 15 X 1	2	20054562
138	HEX SCREW, SPRING, WASHER M5 X 12	2	20061111
139	FUEL PIPE SPRING ϕ7.5	1	20054663
140	GAS FILTER ASSEMBLY	1	20053113

PRORUN

SOLUTION CONTAINER ASSEMBLY

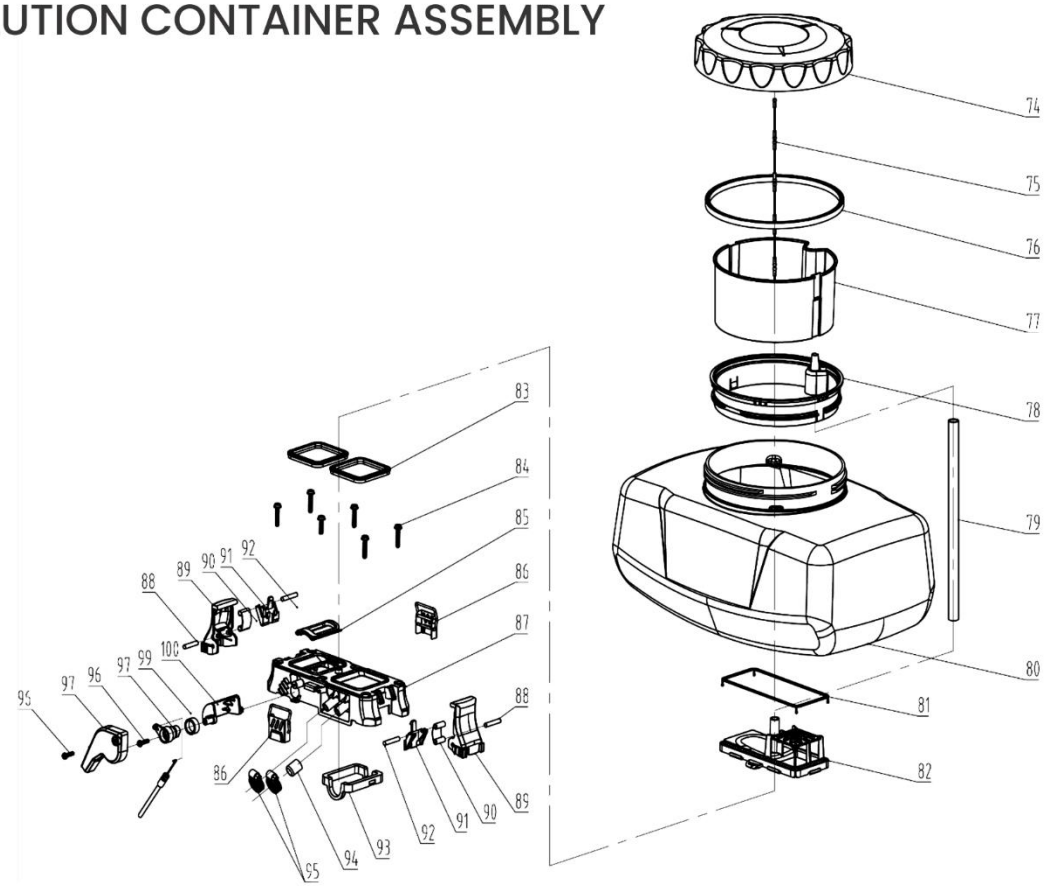

NO	PART NAME	QTY	PART #
74	SOULTION CONTAINER LID	1	20060784
75	LID CHAIN	1	20060786
76	SOLUTION CONTAINER LID GASKET	1	20071655
77	STRAINERS	1	20060787
78	VENTILATOR	1	20060788
79	VENTILATION TUBE	1	20055794
80	TANK WELD	1	20060803
81	BASE SEAL	1	20071656
82	CONVERSION PLATE	1	20060789
83	SQUARE SEALING RING	1	20071654
84	SELG- TAPPING SCREWS ST5.7 X 25	6	20062617
85	LOWER POWDER SWITCH GASKET	1	20071653
86	CLIP	2	20060776
		2	20060777

NO	PART NAME	QTY	PART #
87	UNLOADING BOX	1	20069920
88	CYLINDRICAL PIN ϕ5 X 25	2	20061568
89	LOCK BUTTON	2	20069922
90	LOCKING LEVER	2	20060773
91	CYLINDRICAL PIN 5 X 28.5	2	20062842
92	LOCKING BUTTON SEAT	2	20069921
93	LOWER POWDER PIPE GASKET	1	20071651
94	SEAL PIPE HEAD	1	20060772
95	STAINLESS STEEL CLAMP ϕ10 - ϕ16	2	20060794
96	SELF-TAPPING SCREWS ST4 X 16	2	20051794
97	LOWER POWDER PULL WIRE COVER	1	20069919
98	POWDER SWITCH HOOK AND LOOP	1	20060770
99	WOOL FELT SEALING RING	1	20051677
100	POWDER SWITCH	1	20060771

PRORUN continuously improves our products, and you may find slight differences between your machine and the descriptions contained within this operator's manual. Modifications can be made to the machine without notice and without the obligation to update the manual, providing that the essential safety and functional characteristics remain unaltered. Contact PRORUN Customer Service with any questions and for current specifications.

PRORUN / TOPSUN USA
200 Overhill Drive, Suite A
Mooresville, NC 28117
www.proruntech.com

Zhejiang Zhongjian Technology Co., Ltd
Web: www.topsunpower.cc
E-mail: sales@topsunpower.cc
ADD: No.155 Mingyuan North AVE, Economic Development Zone,
Yongkang, Zhejiang, 321300, P.R. CHINA
Made in China