WORX NITRO

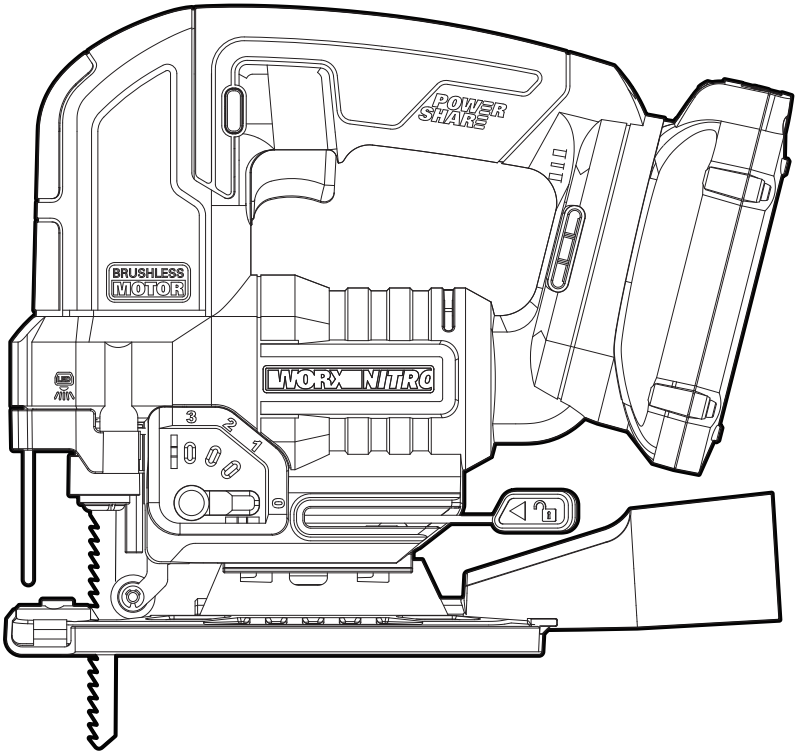

20V Cordless Brushless Jigsaw	**EN**	**P06**
Scie sauteuse sans fil	**F**	**P12**
Sierra de vaivén inalámbrica	**ES**	**P20**

HELPLINE NUMBER
NUMÉRO DU SERVICE D'ASSISTANCE
NÚMERO DE LÍNEA DE AYUDA
1-866-354-WORX (9679)

WX542L WX542L.X

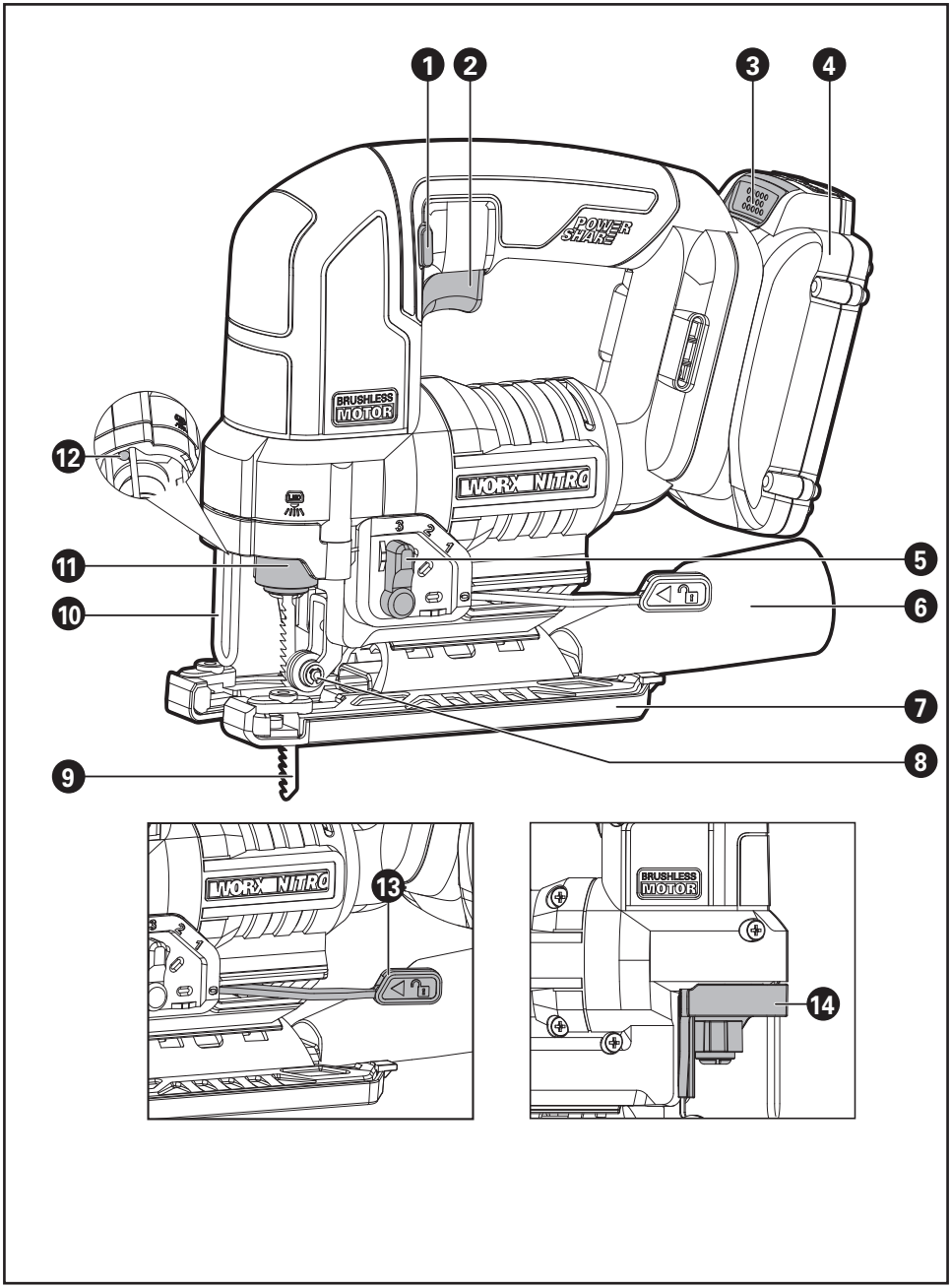
1
2
3
4
POWER SHARE
BRUSHLESS MOTOR
WORX NITRO
12
11
10
5
6
7
8
9
13
BRUSHLESS MOTOR
14

A1

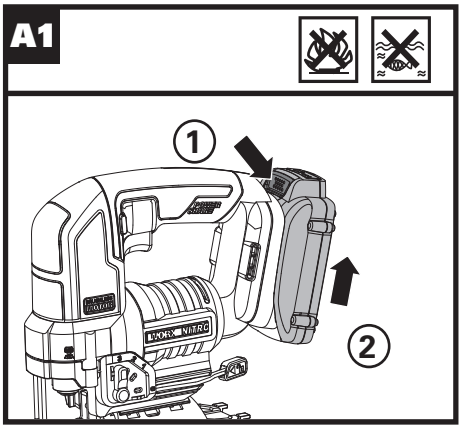

A2

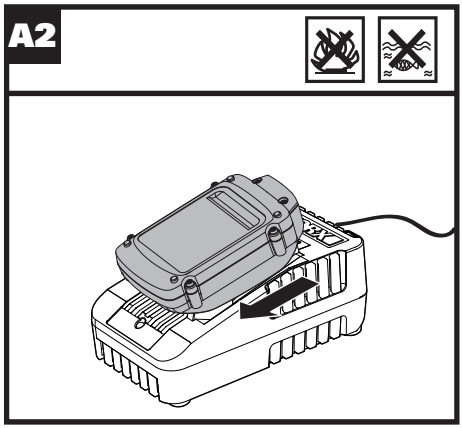

A3

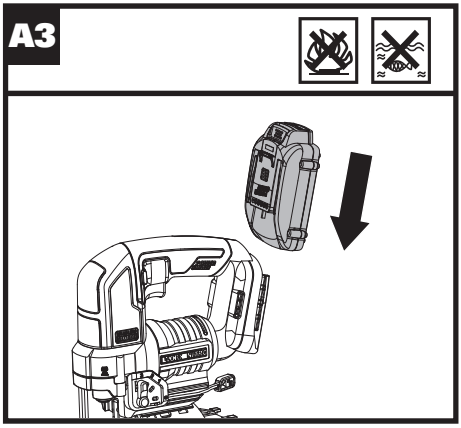

B1

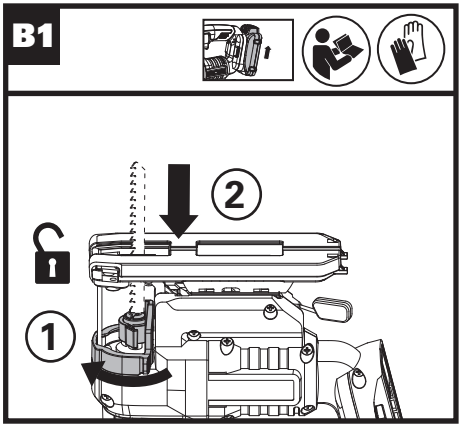

B2

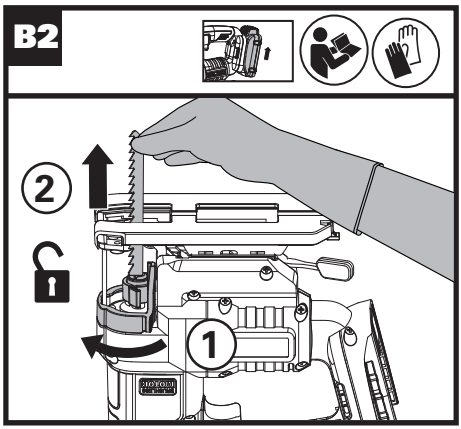

B3

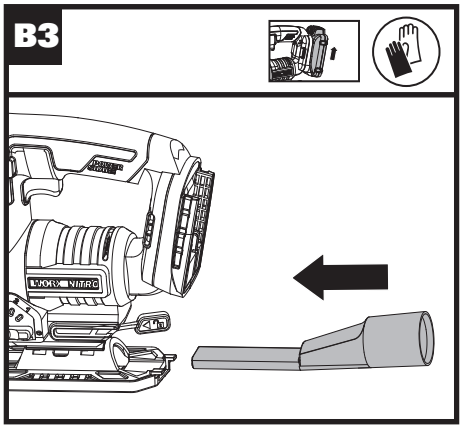

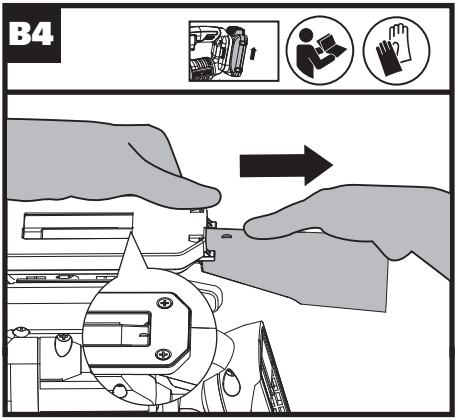
B4

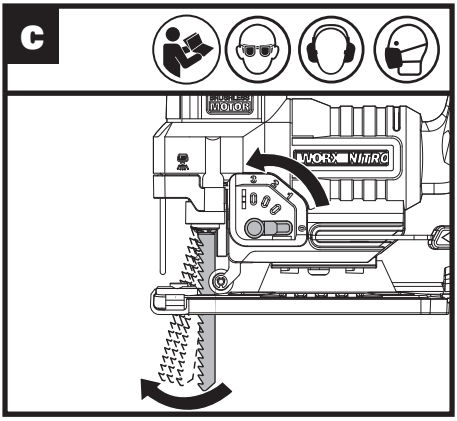
C
BRUSHLESS MOTOR
WORX NITRO

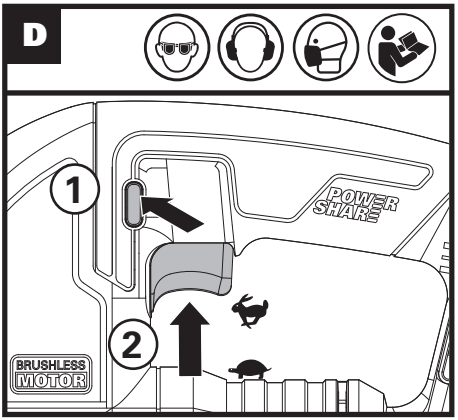
D
1
2
POWER SHARE
BRUSHLESS MOTOR

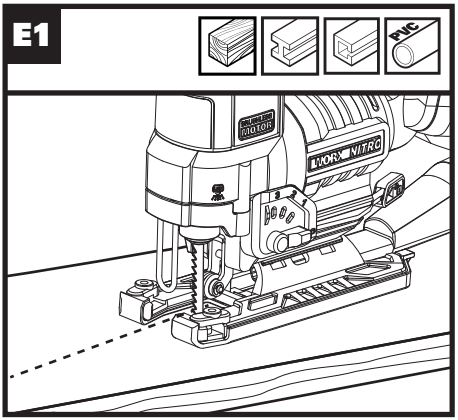
E1
PVC
BRUSHLESS MOTOR
WORX NITRO

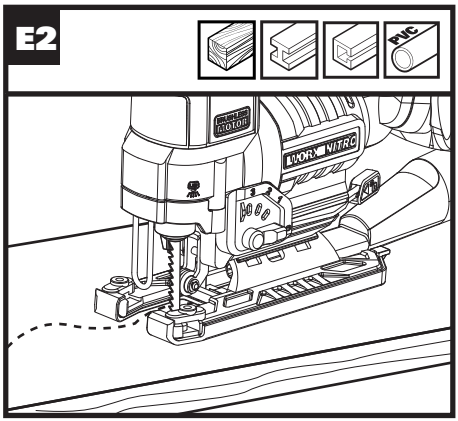
E2
PVC
BRUSHLESS MOTOR
WORX NITRO

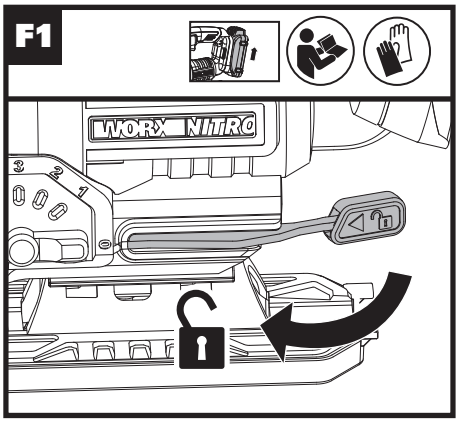
F1
WORX NITRO

F2

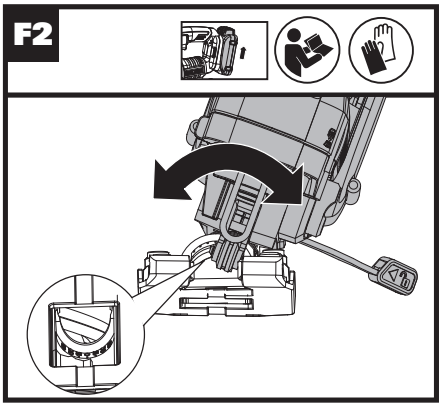

F3

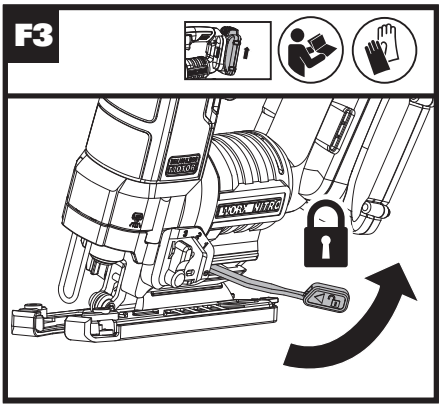

G

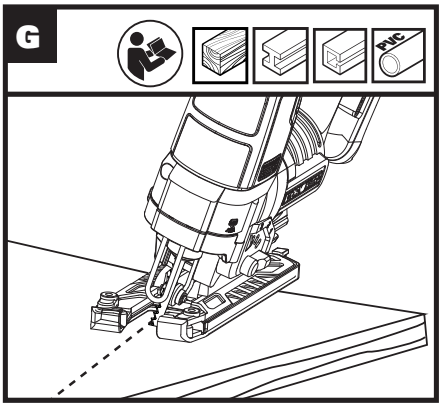

H1

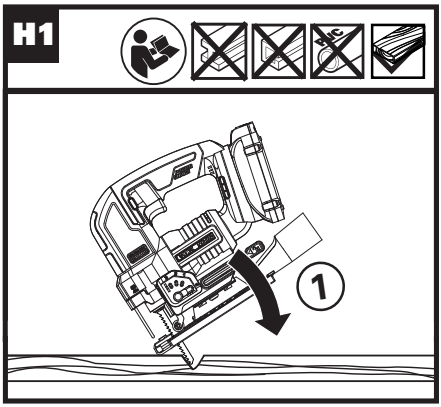

H2

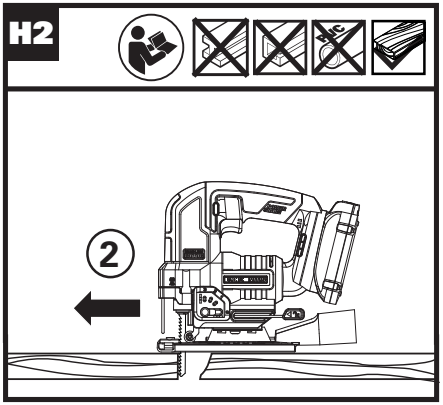

TABLE OF CONTENTS

1. SAFETY INSTRUCTIONS
2. COMPONENT LIST
3. TECHNICAL DATA
4. OPERATING INSTRUCTIONS
5. WORKING HINTS FOR YOUR JIGSAW
6. MAINTENANCE
7. FOR BATTERY TOOLS
8. TROUBLESHOOTING

1. SAFTY INTRODUCTIONS

PRODUCT SAFETY

WARNING: Some dust created by power sanding, sawing, grinding, drilling and other construction activities contains chemicals known to the State of California to cause cancer, birth defects or other reproductive harm. Some examples of these chemicals are:

- **Lead from lead-based paints;**
- **Crystalline silica from bricks and cement and other masonry products;**
- **Arsenic and chromium from chemically-treated lumber.**

Your risk from these exposures varies, depending on how often you do this type of work. To reduce your exposure to these chemicals: work in a well ventilated area, and work with approved safety equipment, such as those dust masks that are specially designed to filter out microscopic particles.

WARNING: This product can expose you to chemicals including lead and Di (2-ethylhexyl) phthalate (DEHP) which are known to the State of California to cause cancer and birth defects or other reproductive harm. For more information go to www.P65Warnings.ca.gov.

GENERAL POWER TOOL SAFETY WARNINGS

WARNING: Read all safety warnings, instructions, illustrations and specifications provided with this power tool. *Failure to follow the warnings and instructions may result in electric shock, fire and/or serious injury.*

Save all warnings and instructions for future reference. *The term power tool in the warnings refers to your electric (corded) power tool or battery-operated (cordless) power tool.*

1) Work area safety

a) Keep work area clean and well lit. *Cluttered or dark areas invite accidents.*

b) Do not operate power tools in explosive atmospheres, such as in the presence of flammable liquids, gases or dust. *Power tools create sparks which may ignite the dust or fumes.*

c) Keep children and bystanders away while operating a power tool. *Distractions can cause you to lose control.*

2) Electrical safety

a) Power tool plugs must match the outlet. Never modify the plug in any way. Do not use any adapter plugs with earthed (grounded) power tools. *Unmodified plugs and matching outlets will reduce risk of electric shock.*

b) Avoid body contact with earthed or grounded surfaces, such as pipes, radiators, ranges and refrigerators. *There is an increased risk of electric shock if your body is earthed or grounded.*

c) Do not expose power tools to rain or wet conditions. *Water entering a power tool will increase the risk of electric shock.*

d) Do not abuse the cord. Never use the cord for carrying, pulling or unplugging the power tool. Keep cord away from heat, oil, sharp edges or moving parts. *Damaged or entangled cords increase the risk of electric shock.*

e) When operating a power tool outdoors, use an extension cord suitable for outdoor use. *Use of a cord suitable for outdoor use reduces the risk of electric shock.*

f) If operating a power tool in a damp location is unavoidable, use a residual current device (RCD) protected supply. *Use of an RCD reduces the risk of electric shock.*

3) Personal safety

a) Stay alert, watch what you are doing and use common sense when operating a power tool. Do not use a power tool while you are tired or under the influence of drugs, alcohol or medication. *A moment of inattention while operating power tools may result in serious personal injury.*

b) Use personal protective equipment. Always wear eye protection. *Protective equipment such as dust mask, non-skid safety shoes, hard hat, or hearing protection used for appropriate conditions will reduce personal injuries.*

c) Prevent unintentional starting. Ensure the switch is in the off-position before connecting to power source and/or battery pack, picking up or carrying the tool. *Carrying power tools with your finger on the switch or energising power tools that have the switch on invites accidents.*

d) Remove any adjusting key or wrench before turning the power tool on. *A wrench or a key left attached to a rotating part of the power tool may result in personal injury.*

e) Do not overreach. Keep proper footing and balance at all times. *This enables better control of the power tool in unexpected situations.*

f) Dress properly. Do not wear loose clothing or jewellery. Keep your hair and clothing away from

moving parts. *Loose clothes, jewellery or long hair can be caught in moving parts.*

g) **If devices are provided for the connection of dust extraction and collection facilities, ensure these are connected and properly used.** *Use of dust collection can reduce dust-related hazards.*

h) **Do not let familiarity gained from frequent use of tools allow you to become complacent and ignore tool safety principles.** *A careless action can cause severe injury within a fraction of a second.*

4) **Power tool use and care**

a) **Do not force the power tool. Use the correct power tool for your application.** *The correct power tool will do the job better and safer at the rate for which it was designed.*

b) **Do not use the power tool if the switch does not turn it on and off.** *Any power tool that cannot be controlled with the switch is dangerous and must be repaired.*

c) **Disconnect the plug from the power source and/ or remove the battery pack, if detachable, from the power tool before making any adjustments, changing accessories, or storing power tools.** *Such preventive safety measures reduce the risk of starting the power tool accidentally.*

d) **Store idle power tools out of the reach of children and do not allow persons unfamiliar with the power tool or these instructions to operate the power tool.** *Power tools are dangerous in the hands of untrained users.*

e) **Maintain power tools and accessories. Check for misalignment or binding of moving parts, breakage of parts and any other condition that may affect the power tool's operation. If damaged, have the power tool repaired before use.** *Many accidents are caused by poorly maintained power tools.*

f) **Keep cutting tools sharp and clean.** *Properly maintained cutting tools with sharp cutting edges are less likely to bind and are easier to control.*

g) **Use the power tool, accessories and tool bits etc. in accordance with these instructions, taking into account the working conditions and the work to be performed.** *Use of the power tool for operations different from those intended could result in a hazardous situation.*

h) **Keep handles and grasping surfaces dry, clean and free from oil and grease.** *Slippery handles and grasping surfaces do not allow for safe handling and control of the tool in unexpected situations.*

5) **Battery tool use and care**

a) **Recharge only with the charger specified by the manufacturer.** *A charger that is suitable for one type of battery pack may create a risk of fire when used with another battery pack.*

b) **Use power tools only with specifically designated battery packs.** *Use of any other battery packs may create a risk of injury and fire.*

c) **When battery pack is not in use, keep it away from other metal objects, like paper clips, coins, keys, nails, screws or other small metal objects, that can make a connection from one terminal to another.** *Shorting the battery terminals together may cause burns or a fire.*

d) **Under abusive conditions, liquid may be ejected from the battery; avoid contact. If contact accidentally occurs, flush with water. If liquid contacts eyes, additionally seek medical help.** *Liquid ejected from the battery may cause irritation or burns.*

e) **Do not use a battery pack or tool that is damaged or modified.** *Damaged or modified batteries may exhibit unpredictable behaviour resulting in fire, explosion or risk of injury.*

f) **Do not expose a battery pack or tool to fire or excessive temperature.** *Exposure to fire or temperature above 266 °F(130 °C) may cause explosion.*

g) **Follow all charging instructions and do not charge the battery pack or tool outside the temperature range specified in the instructions.** *Charging improperly or at temperatures outside the specified range may damage the battery and increase the risk of fire.*

6) **Service**

a) **Have your power tool serviced by a qualified repair person using only identical replacement parts.** *This will ensure that the safety of the power tool is maintained.*

b) **Never service damaged battery packs.** *Service of battery packs should only be performed by the manufacturer or authorized service providers.*

JIGSAW SAFETY WARNINGS

1. **Hold jig saw by insulated gripping surfaces, when performing an operation where the cutting accessory may contact hidden wiring.** *Cutting accessory contacting a "live" wire may make exposed metal parts of the power tool "live" and could give the operator an electric shock.*
2. **Use clamps or another practical way to secure and support the workpiece to a stable platform.** *Holding the workpiece by hand or against your body leaves it unstable and may lead to loss of control.*

SAFETY WARNINGS FOR BATTERY PACK

a) **Do not dismantle, open or shred battery pack.**

b) **Do not expose battery pack to heat or fire. Avoid storage in direct sunlight.**

c) **Do not short-circuit a battery pack. Do not store battery packs haphazardly in a box or drawer where they may short-circuit each other or be short-circuited by other metal objects.** When battery pack is not in use, keep it away from other metal objects, like paper clips, coins, keys, nails, screws or other small metal objects, that can make a connection from one terminal to another. Shorting the battery terminals together may cause burns or fire.

d) **Do not subject battery pack to mechanical shock.**
e) **In the event of battery leaking, do not allow the liquid to come in contact with the skin or eyes. If contact has been made, wash the affected area with copious amounts of water and seek medical advice.**
f) **Do not use any battery pack which is not designed for use with the equipment.**
g) **Keep battery pack out of the reach of children.**
h) **Always purchase the battery pack recommended by the device manufacturer for the equipment.**
i) **Keep battery pack clean and dry.**
j) **Wipe the battery pack terminals with a clean dry cloth if they become dirty.**
k) **Battery pack need to be charged before use. Always use the correct charger and refer to the manufacturer's instructions or equipment manual for proper charging instructions.**
l) **Do not leave battery pack on prolonged charge when not in use.**
m) **After extended periods of storage, it may be necessary to charge and discharge the battery pack several times to obtain maximum performance.**
n) **Recharge only with the charger specified by WorxNITRO. Do not use any charger other than that specifically provided for use with the equipment.**
o) **Retain the original product literature for future reference.**
p) **Use only the battery pack in the application for which it was intended.**
q) **Remove the battery pack from the equipment when not in use.**
r) **Dispose of properly.**
s) **Do not mix cells of different manufacture, capacity, size or type within a device.**
t) **Keep the battery away from microwaves and high pressure.**

SYMBOLS

	To reduce the risk of injury, user must read instruction manual
	Warning
	Wear ear protection
	Wear eye protection
	Wear dust mask
	Li-Ion battery, battery must be recycled.
	Make sure the battery is removed prior to changing accessories or making any adjustments to the tool.
	Wear protective gloves
	Wood
	Metal
	Aluminium
	Plastic
	Incorrect
	Correct
	Batteries may enter water cycle if disposed improperly, which can be hazardous for ecosystem. Do not dispose of waste batteries as unsorted municipal waste.
	Do not burn
	High speed
	Low speed
	Lock
	Unlock



call2recycle®

POSITEC Inc. has established a partnership with the RBRC Corporation to recycle any Positec batteries with the RBRC-call2recycle seal. For environmental protection, please do not discard batteries in the trash. After the batteries' life cycle is ended, then please call 1-800-822-8837 for a free service that will properly dispose of the battery.

2. COMPONENT LIST

1.	**LOCK-OFF BUTTON**
2.	**VARIABLE SPEED TRIGGER**
3.	**BATTERY PACK RELEASE BUTTON ***
4.	**BATTERY PACK ***
5.	**PENDULUM ACTION CONTROL LEVER**
6.	**VACUUM ADAPTER**
7.	**BASE PLATE**
8.	**ROLLER GUIDE**
9.	**SAW BLADE**
10.	**CONTACT PROTECTOR**
11.	**TOOL-FREE BLADE HOLDER**
12.	**LED LIGHT**
13.	**BASE PLATE ADJUSTMENT SWITCH**
14.	**BLADE RELEASE LATCH**

*** Not all the accessories illustrated or described are included in standard delivery.**

3. TECHNICAL DATA

Type **WX542L WX542L.X (5- designation of machinery, representative of Saw)**

	WX542L WX542L.X**
Voltage	20V ⎓ Max***
No-load speed	0-3500 spm
Stroke length	1''(26mm)
Cutting capacity — Wood	4-23/32''(120mm)
Cutting capacity — Steel	25/64''(10mm)
Cutting capacity — PVC	25/32''(20mm)
Bevel capacity	±45°
Machine weight (Bare tool)	4.2lbs(1.9kg)

** X may be followed by one or two characters. All models are the same except model number and trademark.The suffix in models may be number from "1" to "999" or English letter "A" to "Z" or "M1" to" M9" which means different package or the various of accessories packed in the package.
*** Voltage measured without workload. Initial battery voltage reaches maximum of 20 volts. Nominal voltage is 18 volts.

Category	**Type**	**Capacity**
20V Battery	WA3578	4.0Ah
	WA3525	2.0Ah
	WA3520	1.5Ah
	WA3575	2.0Ah
20V Charger	WA3881	2.0A
	WA3742	0.4A
	WA3875	2.0A

We recommend that you purchase your accessories listed in the above list from the same store that sold you the tool. Refer to the accessory packaging for further details. Store personnel can assist you and offer advice.

4. OPERATING INSTRUCTIONS

NOTE: Before using the tool, read the instruction book carefully.

INTENDED USE

The machine is intended for sawing wood, plastic, metal and building materials while resting firmly on the workpiece. It is suitable for straight and curved cuts. The saw blade recommendations are to be observed.

ASSEMBLY AND OPERATION

ACTION	FIGURE
BEFORE OPERATION	
Removing the battery pack	See Fig. A1
Charging the battery	See Fig. A2
Installing the battery pack	See Fig. A3
ASSEMBLY	
Blade Installation **Note:** Remove the battery pack during blade installation and blade removal	See Fig. B1
Blade Removal **Note:** Remove the battery pack and allow the blade to cool. Rotate the tool-free blade holder and remove the blade.	See Fig. B2
Vacuum Adapter Installation	See Fig. B3
Vacuum Adapter Removal **Note:** Press and hold the projection on the bottom of the vacuum adapter before pulling it out of the machine.	See Fig. B4
OPERATION	
Pendulum Function **Note:** The amount of pendulum action may be adjusted with the pendulum action control lever. In general, a large orbital action (3) should be used with soft materials and a no orbital action (0) should be used with hard materials. When a smooth cut is required, no orbit (0) should be used.	See Fig. C
Variable Speed Trigger **Note:** For safety reasons the trigger of the machine cannot be locked; it must remain pressed during the entire operation. To vary the speed, increase or decrease pressure on the trigger. The further the trigger is pulled, the greater the speed.	See Fig. D
Straight Cut and Curve Cut	See Fig. E1, E2
Bevel Cut **Note:** Remove the vacuum adapter before adjusting the base plate. **Note**: Rotate the base plate to the desired position according to the scale. Ensure the blade is engaged between the blade positioning wheel.	See Fig. F1-F3&G
Plunge Cut **Note:** Plunge cuts can be made into soft materials without a pre-drilled hole. Harder materials require a starter hole with a diameter slightly over the width of the blade. To make a plunge cut: 1. Set the pendulum action control lever to 0. 2. Make sure nothing below the intended cut area will be damaged. 3. Without turning the tool on, place the front edge of the shoe solidly on workpiece. 4. Align the blade with the intended cut line, but keep it above the workpiece. 5. Using the front edge of the shoe as a pivot, turn on the tool and gradually lower the blade into the workpiece. 6. When the shoe is flat against the workpiece, normal cutting may take place.	See Fig. H1&H2

5. WORKING HINTS FOR YOUR JIGSAW

If your power tool becomes too hot, please run your jigsaw no load for 2-3 minutes to cool the motor. Avoid prolonged usage at very low speeds.
Always use a blade suited to the material and material thickness to be cut. For tight curves it is best to use a narrow saw blade. When sawing metal or similar materials, apply coolant/lubricant alongside the cutting line.
Always ensure the workpiece is firmly held or clamped to prevent movement. Any movement of the material may affect the quality of the cut. The blade cuts on the upward stroke and may chip the uppermost. Ensure your uppermost surface is a non-visible surface when your work is finished.
For easier control, use low speed to start cutting and then increase to correct speed.
In order to avoid operation malfunctions, do not saw gypsum board from below or overhead.

The guide roller should occasionally be checked for wear and lubricated with a drop of oil. If it is worn, it must be replaced.

6. MAINTENANCE

Remove the battery pack from the tool before carrying out any adjustment, servicing or maintenance.
There are no user serviceable parts in your power tool. Never use water or chemical cleaners to clean your power tool. Wipe clean with a dry cloth. Always store your power tool in a dry place. Keep the motor ventilation slots clean. Keep all working controls free of dust. Only genuine WorxNITRO batteries, accessories and parts should be used with this product. Failure to do so, will void all warranty claims.

7. FOR BATTERY TOOLS

The ambient temperature range for the use and storage of tool and battery is 32°F-113°F(0°C-45°C).
The recommended ambient temperature range for the charging system during charging is 32°F-104°F(0°C-40°C).

8. TROUBLESHOOTING

Symptom	Possible Causes	Possible Solution
The tool suddenly stops during operation.	Overload Battery temperature too high	Relieve the load on the machine immediately and allow cooling for approx. 30 seconds by running the machine on no-load.
	Low battery capacity	Charge the battery pack.