Operator's Manual

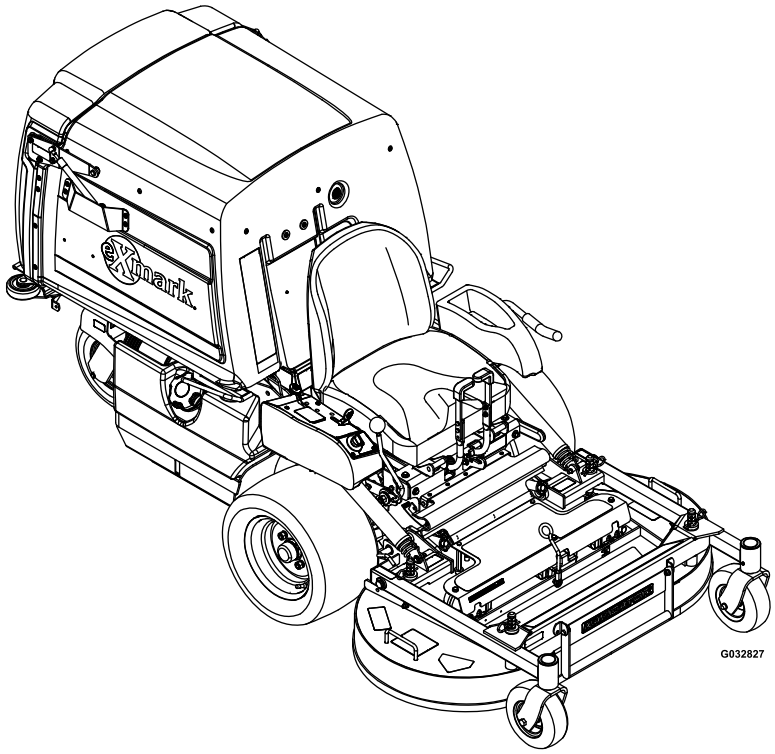

NAVIGATOR®

For Serial Nos.
417,930,746 & Higher
Part No. 3480-847 Rev. A

⚠ WARNING

CALIFORNIA
Proposition 65 Warning

The engine exhaust from this product contains chemicals known to the State of California to cause cancer, birth defects, or other reproductive harm.

Battery posts, terminals, and related accessories contain lead and lead compounds, chemicals known to the State of California to cause cancer and reproductive harm. Wash hands after handling.

Use of this product may cause exposure to chemicals known to the State of California to cause cancer, birth defects, or other reproductive harm.

Important: **It is a violation of California Public Resource Code Section 4442 or 4443 to use or operate the engine on any forest-covered, brush-covered, or grass-covered land unless the engine is equipped with a spark arrester, as defined in Section 4442, maintained in effective working order or the engine is constructed, equipped, and maintained for the prevention of fire.**

To acquire a spark arrester for your unit, see your Engine Service Dealer.

For all models that do not have Exmark engines, please refer to the engine manufacturer's information included with the machine.

For models with Exmark engines, refer to this manual for information.

The gross or net horsepower (or torque) of this engine was laboratory rated by the engine manufacturer in accordance with the Society of Automotive Engineers (SAE) J1940 or J2723. As configured to meet safety, emission, and operating requirements, the actual engine horsepower (or torque) on this class of mower will be significantly lower.

©2026 Exmark Mfg. Co., Inc.
415 Industrial Row
Beatrice, NE 68310

Contact us at www.Exmark.com.
Printed in the USA
All Rights Reserved

Introduction

CONGRATULATIONS on the purchase of your Exmark Mower. This product has been carefully designed and manufactured to give you a maximum amount of dependability and years of trouble-free operation.

This rotary-blade, riding lawn mower is intended to be used by professional, hired operators. It is designed primarily for cutting grass on well-maintained lawns on residential or commercial properties. Using this product for purposes other than its intended use could prove dangerous to you and bystanders.

This manual contains operating, maintenance, adjustment, and safety instructions for your Exmark mower.

BEFORE OPERATING YOUR MOWER, CAREFULLY READ THIS MANUAL IN ITS ENTIRETY.

By following the operating, maintenance, and safety instructions, you will prolong the life of your mower, maintain its maximum efficiency, and promote safe operation.

To maximize safety, performance, and proper operation of this machine, it is essential that all operators carefully read and fully understand the contents of the Operator's manual provided with the product. Failure to comply with the operating instructions or receive proper training may result in injury. Go to https://www.Exmark.com for additional safe operation information, such as safety tips, training materials, and Operator's manuals.

If additional information is needed, or should you require trained mechanic service, contact your authorized Exmark equipment dealer or distributor.

All Exmark equipment dealers and distributors are kept informed of the latest methods of servicing and are equipped to provide prompt and efficient service in the field or at their service stations. They carry ample stock of service parts or can secure them promptly for you from the factory.

All Exmark parts are thoroughly tested and inspected before leaving the factory, however, attention is required on your part if you are to obtain the fullest measure of satisfaction and performance.

Whenever you need service, genuine Exmark parts, or additional information, contact an Authorized Service Dealer or Exmark Customer Service and have the model and serial numbers of your product ready.

Figure 1 identifies the location of the model and serial numbers on the product. Write the numbers in the space provided.

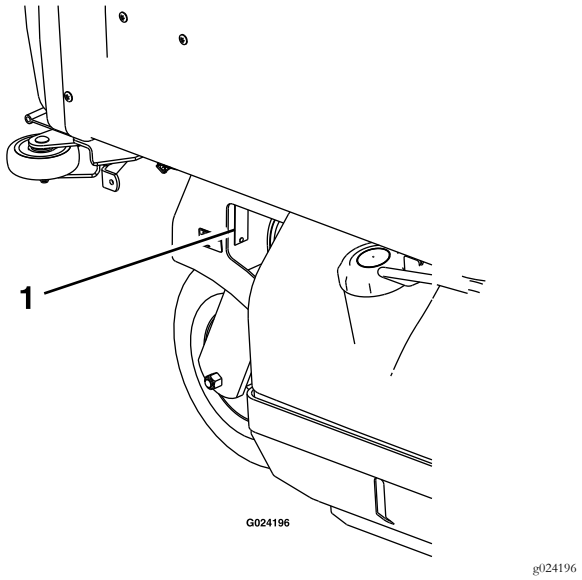

Figure 1

1. Model and serial number location

Model No. _____

Serial No. _____

For complete warranty details, see https://www.Exmark.com. You may also call us 402-223-6375 to request a written copy of the product's warranty.

Contents

Introduction 3
Safety 5
Safety Alert Symbol 5
General Safety 5
Safety and Instructional Decals 6
Specifications 12
Systems 12
Dimensions 13
Torque Requirements 14
Product Overview 14
Operation 15
Controls 15
Before Operation 17
Operating Instructions 18
During Operation Safety 18
After Operation 27
Transporting 27
Maintenance 29
Maintenance Safety 29
Recommended Maintenance Schedule(s) 30
Periodic Maintenance 31
Engine Maintenance 31
Engine Safety 31
Check Engine Oil Level 31
Check Mower Blades 33
Check Safety Interlock System 35
Check Stop Time of Moving Drive Components 38
Check for Loose Hardware 39
Service Air Cleaner 39
Change Engine Oil 39
Check Hydraulic Oil Level 39
Check Tire Pressures 40
Check Condition Of Belts 40
Change Gearbox Oil 40
Check Gearbox Oil 41
Lubricate Grease Fittings 41
Lubricate Rear Caster Wheel Hubs 41
Lubricate Brake Handle Pivot 42
Lubricate Brake Rod Bushings 42
Lubricate Steering Linkage Rod Ends 43
Lubricate Hopper Switch Actuator 43
Check Spark Plugs 43
Change Hydraulic System Filter and Fluid 43
Check Wheel Hub Locknuts 44
Check Wheel Lug Nuts 44
Thread Locking Adhesives 44
Dielectric Grease 44
Adjustments 45
Deck Leveling 45
PTO Drive Belt Tension 45
Pump Drive Belt Tension 45
PTO Belt Replacement 45
Pump Drive Belt Replacement 46
Belt Guide Adjustment 46
Adjust Safety Switch 47
Parking Brake Adjustment 47
Reverse Stop Rod Adjustment 48
Adjust Speed Control Lever Tension 49
Motion Control Linkage Adjustment 49
Tracking Adjustment 50
PTO Drive Pulley Alignment 50
Pump Drive Pulley Alignment 50
Caster Pivot Bearings Pre-Load Adjustment 51
Hopper Door Adjustment 51
PTO Brake Spring Adjustment 52
Deck Locking Pin Stop Adjustment 52
Cleaning 53
Cleaning and Storing Safety 53
Clean Engine and Exhaust System Area 53
Remove Engine Shrouds and Clean Cooling Fins 53
Clean Debris From Machine 53
Clean Debris From Cutting Deck 53
Clean Grass Build-Up Under Deck 53
Waste Disposal 54
Troubleshooting 55
Schematics 57
California Proposition 65 Warning Information 60

Safety

Safety Alert Symbol

This Safety Alert Symbol (Figure 2) is used both in this manual and on the machine to identify important safety messages which must be followed to avoid accidents.

This symbol means: **ATTENTION! BECOME ALERT! YOUR SAFETY IS INVOLVED!**



g000502

Figure 2
Safety Alert Symbol

The safety alert symbol appears above information which alerts you to unsafe actions or situations and will be followed by the word **DANGER**, **WARNING**, or **CAUTION**.

DANGER: Indicates an imminently hazardous situation which, if not avoided, **Will** result in death or serious injury.

WARNING: Indicates a potentially hazardous situation which, if not avoided, **Could** result in death or serious injury.

CAUTION: Indicates a potentially hazardous situation which, if not avoided, **May** result in minor or moderate injury.

This manual uses two other words to highlight information. **Important** calls attention to special mechanical information and **Note** emphasizes general information worthy of special attention.

General Safety

This machine is capable of amputating hands and feet and of throwing objects. Always follow all safety instructions to avoid serious personal injury.

- Read, understand, and follow all instructions and warnings in the Operator's Manual and on the machine, engine, and attachments. All operators and mechanics should be trained. If the operator(s) or mechanic(s) can not read this manual, it is the owner's responsibility to explain this material to them; other languages may be available on our website.
- Only allow trained, responsible, and physically capable operators that are familiar with the safe operation, operator controls, and safety signs and instructions to operate the machine. Never let children or untrained people operate or service the equipment. Local regulations may restrict the age of the operator.
- Do Not operate the machine near drop-offs, ditches, embankments, water, or other hazards, or on slopes greater than 15 degrees.
- Keep bystanders and children out of the operating area.
- Do Not put your hands or feet near moving parts.
- Do Not operate the machine without all safety shields, guards, switches, and other devices in place and in proper working condition.
- Park machine on level ground, disengage drives, set parking brake, stop engine, and remove key. Wait for all moving parts to stop before leaving the operator's position. Allow the machine to cool before servicing, adjusting, fueling, cleaning, or storing.

Safety and Instructional Decals

- Keep all safety signs legible. Remove all grease, dirt and debris from safety signs and instructional labels.
- Replace all worn, damaged, or missing safety signs.
- When replacement components are installed, be sure that current safety signs are affixed to the replaced components.
- If an attachment or accessory has been installed, make sure current safety signs are visible.
- New safety signs may be obtained from your authorized Exmark equipment dealer or distributor or from Exmark Mfg. Co. Inc.
- Safety signs may be affixed by peeling off the backing to expose the adhesive surface. Apply only to a clean, dry surface. Smooth to remove any air bubbles.
- Familiarize yourself with the following safety signs and instruction labels. They are critical to the safe operation of your Exmark commercial mower.

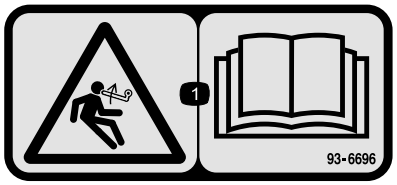

decal93-6696

93-6696

1. Stored energy hazard-Remove the spring from the tractor section only. See Operator's manual for disassembly procedure.

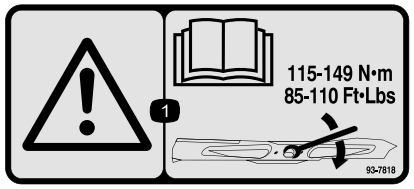

decal93-7818

93-7818

1. Warning—read the *Operator's Manual* for instructions on torquing the blade bolt/nut to 115 to 149 N·m (85 to 110 ft-lb).

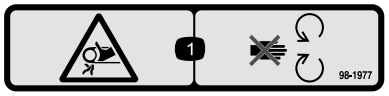

decal98-1977

98-1977

1. Entanglement hazard, belt—stay away from moving parts.



decal106-5517

106-5517

1. Warning—do not touch the hot surface.

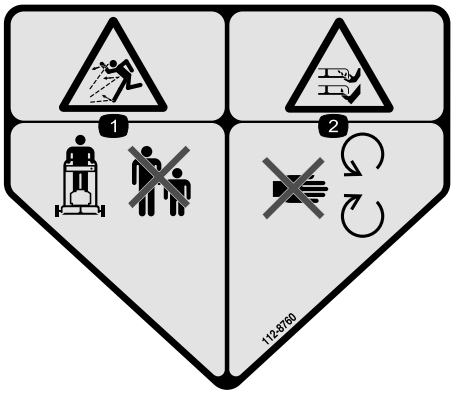

decal112-8760

112-8760

1. Thrown object hazard—keep bystanders away.
2. Cutting/dismemberment hazard of hand or foot, mower blade—stay away from moving parts.

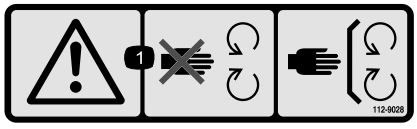

decal112-9028

112-9028

1. Warning—stay away from moving parts; keep all guards and shields in place.

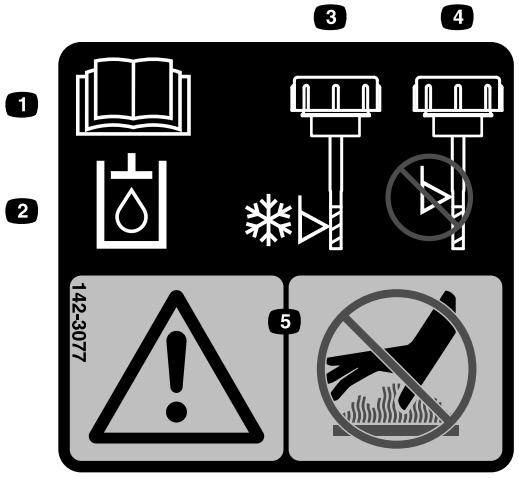

decal142-3077

142-3077

1. Read the Operator's manual.
2. Hydraulic fluid
3. Correct fill level when cold
4. Do Not overfill
5. Warning-Do Not touch the hot surface.

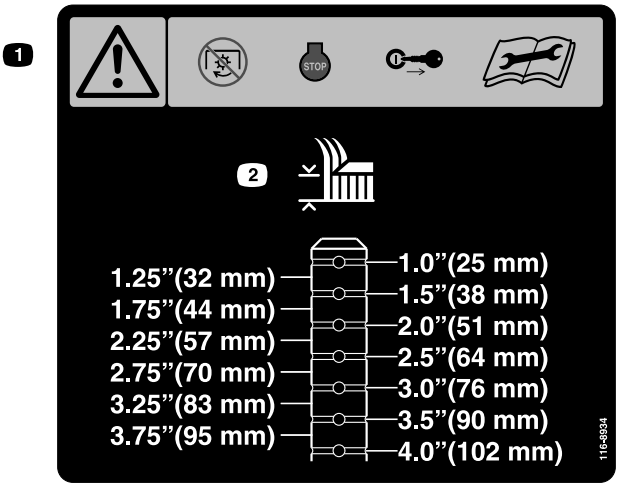

decal116-8934

116-8934

1. Warning-Disengage blade clutch, shut off engine, and remove key before making adjustments, servicing, or cleaning deck.
2. Height of cut.

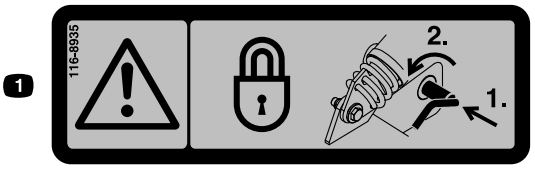

decal116-8935

116-8935

1. Warning folding deck hazard-Lock the pivot joint by pushing inward and rotating towards the front of the deck.

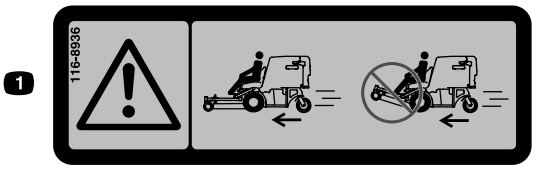

decal116-8936

116-8936

1. Danger-Do Not operate with deck in tilt-up position.

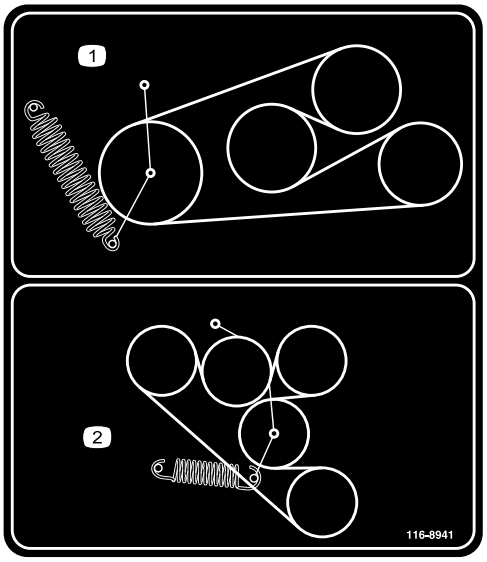

decal116-8941

116-8941

1. PTO belt routing
2. Pump-drive belt routing

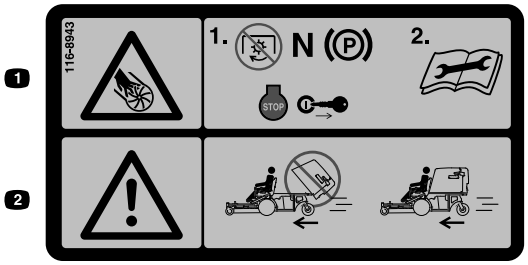

decal116-8943

116-8943

1. Rotating blades hazard-Disengage PTO, move speed control lever in neutral, engage parking brake, stop engine, and remove key before leaving the operator's position. Read the instructions before servicing or performing maintenance.
2. Danger-Do not operate with mower hopper in raised position

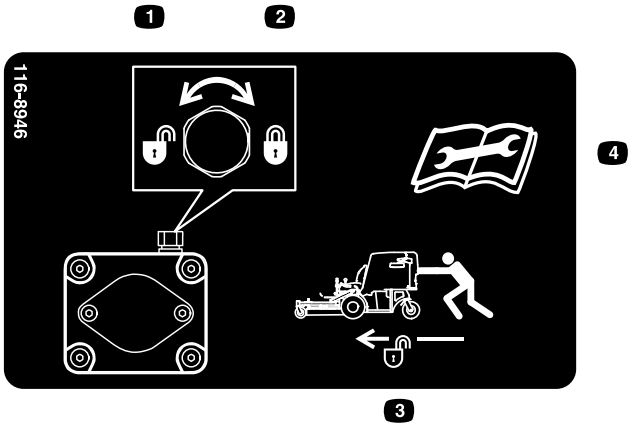

decal116-8946

116-8946

1. Rotate counterclockwise to release
2. Rotate clockwise to lock
3. Unlock to push machine
4. Read the instructions before servicing or performing maintenance.

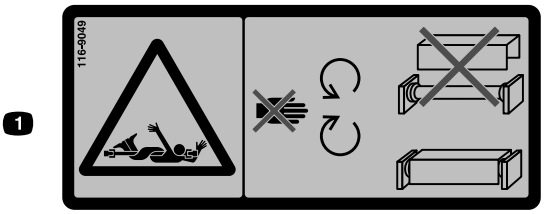

decal116-9049

116-9049

1. Rotating driveline hazard-Keep all drivelines shields in place. Securely attach both ends of the driveline.

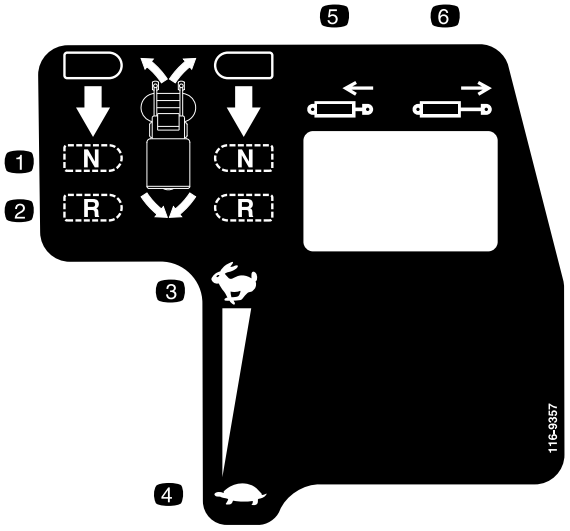

decal116-9357

116-9357

EFI Models

1. Neutral
2. Reverse
3. Fast
4. Slow
5. Hopper down
6. Hopper up

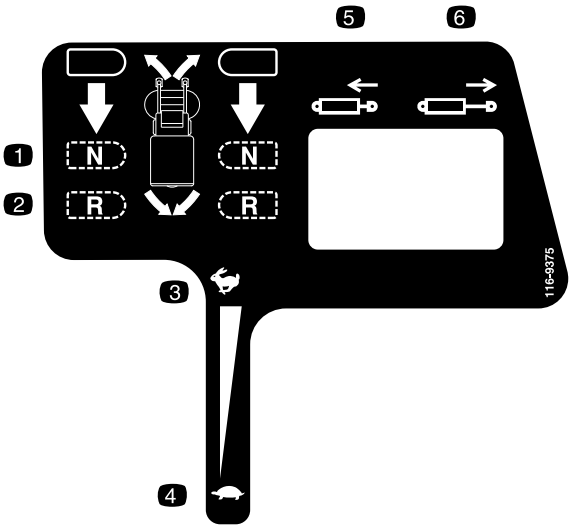

decal116-9375

116-9375

All Models Except EFI

1. Neutral
2. Reverse
3. Fast
4. Slow



decal116-9470

116-9470

All Models Except EFI

1. Choke-on
2. Choke-off

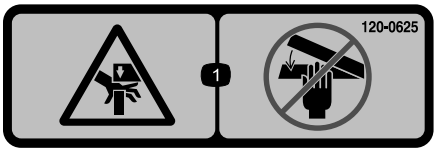

decal120-0625

120-0625

1. Pinch point, hand-keep hands away.

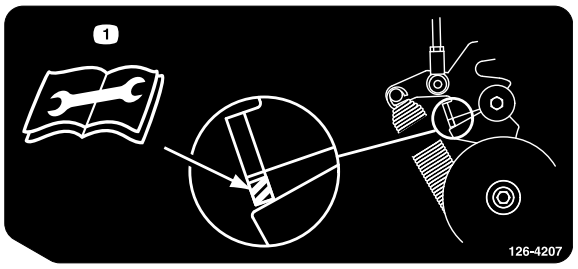

decal126-4207

126-4207

1. Refer to the Operator's manual for adjustment procedure. When PTO is engaged, idler arm position must be in hatched area or adjustment is required.

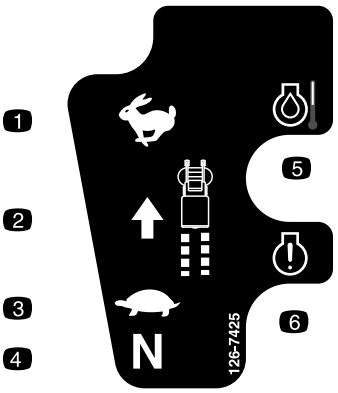

decal126-7425

126-7425

EFI Models

1. Fast
2. Machine speed
3. Slow
4. Neutral
5. Engine oil temperature light
6. Check engine

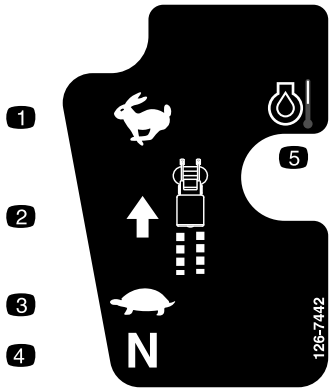

decal126-7442

126-7442

All Models Except EFI

1. Fast
2. Machine speed
3. Slow
4. Neutral
5. Engine oil temperature light



decal133-8062

133-8062

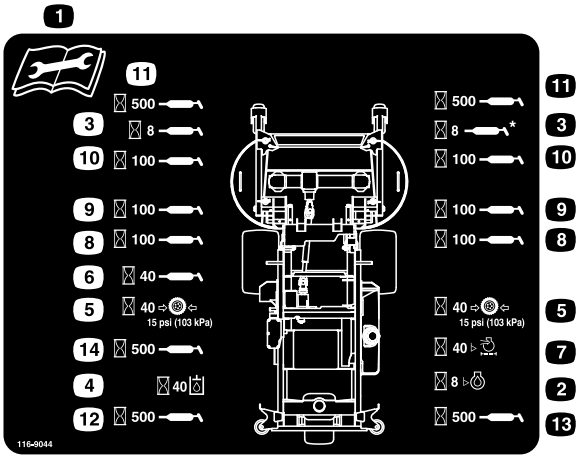

decal116-9044

116-9044

1. Read the Operator's Manual before performing any maintenance.
2. Check engine oil every 8 hours.
3. Grease front caster wheel bearings every 8 hours. *If grease zerk is present.
4. Check hydraulic oil level every 40 hours (only use recommended hydro oil).
5. Check tire pressure every 40 hours.
6. Grease deck drive PTO every 40 hours.
7. Check air cleaner every 40 hours.
8. Grease deck lock mechanism every 100 hours.
9. Grease deck pivots every 100 hours.
10. Check gearbox oil every 100 hours (use only Mobil 1 75W-90 gear oil).
11. Grease front caster pivots every 500 hours.
12. Grease rear caster pivot every 500 hours.
13. Grease rear caster wheel every 500 hours.
14. Grease belt idlers every 500 hours.

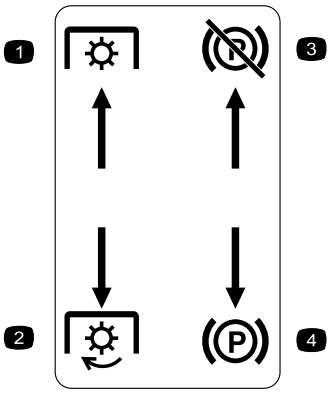

decal126-4159

Molded in LH Console

1. PTO-disengage
2. PTO-engage
3. Park brake-release
4. Park brake-engage

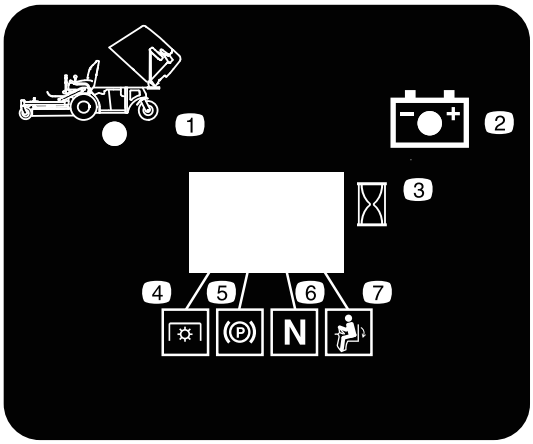

decalhourmessagedisplay-nav

Message Display

1. Hopper up indicator
2. Battery
3. Hour meter
4. PTO
5. Parking brake
6. Neutral
7. Operator presence switch

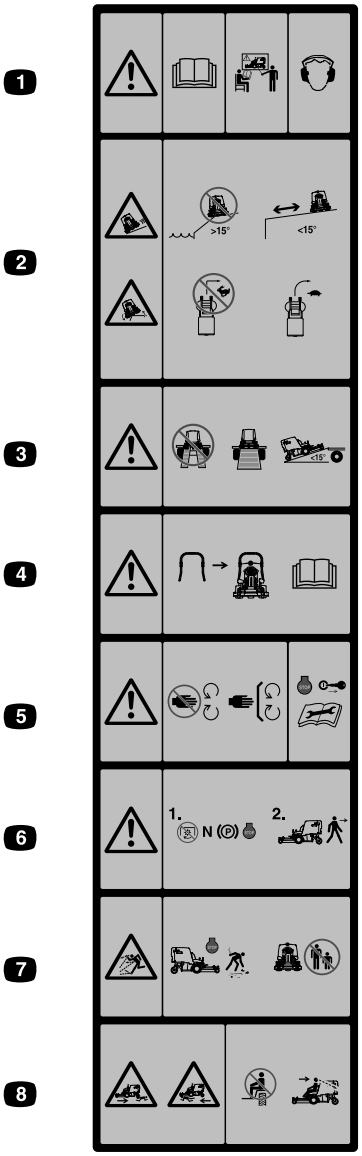

g222544

Molded into Front of Hopper

This machine complies with the industry standard stability test in the static lateral and longitudinal tests with the maximum recommended slope indicated on the decal. It is important that each operator review the slope operation instructions in the operator's manual and review the conditions in which the machine is being operated to determine if the machine may be operated in the conditions that day and on that site. Changes to terrain can result in a change in slope operation for any machine.

1. Warning-Read the Operator's Manual. Do Not operate this machine unless you are trained. Wear hearing protection.
2. Sliding, tipping hazard-Do Not use the machine near drop-offs with slopes greater than 15 degrees, use the machine a safe distance form drop-offs on slopes less than 15 degrees; Do Not turn sharply while traveling fast, drive slowly when turning.
3. Warning-Do Not use dual ramps, use one piece ramps when transporting machine; Do Not use ramps with inclination greater than 15 degrees.
4. A rollbar is available and its use is recommended for areas where there are slopes, drop-offs, or water
5. Warning-Stay away from moving parts; keep all guards in place. Stop engine and remove key before adjusting, servicing, or cleaning.
6. Warning-Disengage PTO, move speed control lever to neutral position, engage parking brake, stop engine, and remove key before leaving the operator's position.
7. Thrown object hazard-Pick up objects that could be thrown by mower. Keep deflector in place. Keep bystanders away.
8. Crushing/dismemberment hazard of bystanders - Do Not carry passengers, look forward and down when operating the machine, look behind and down when reversing.

Specifications

Systems

Engine

- Engine Specifications: See your Engine Owner's Manual
- Engine Oil Type: Exmark 4–Cycle Premium Engine Oil
- RPM: Full Speed: 3600 ±50 RPM (No Load) Idle: 1500 RPM

Fuel System

- Capacity: 7.5 gal. (28 L)
- Fuel Recommendations:
  - For best results, use only clean, fresh, unleaded gasoline with an octane rating of 87 or higher ((R+M)/2 rating method).
  - Oxygenated fuel with up to 10% ethanol or 15% MTBE by volume is acceptable.
  - **Do Not** use ethanol blends of gasoline (such as E15 or E85) with more than 10% ethanol by volume. Performance problems and/or engine damage may result which may not be covered under warranty.
  - **Do Not** use gasoline containing methanol.
  - **Do Not** store fuel either in the fuel tank or fuel containers over the winter unless a fuel stabilizer is used.
  - **Do Not** add oil to gasoline.
- Fuel Filter: Kohler P/N 24 050 13-S

Electrical System

- Charging System: Flywheel Alternator
- Charging Capacity:
  - All models except Kohler EFI: 15 amps
  - Kohler EFI: 20 amps
- Battery Type: BCI Group U1
- Battery Voltage: 12 Volt
- Polarity: Negative Ground
- Fuses: Two 25 amp and one 15 amp blade type

Safety Interlock System

- LCD indicators appear for the PTO, park brake, drive levers, and operator presence in the message display on the RH control panel.
- PTO must be disengaged, brake engaged, and speed control lever in neutral to start engine. (It is not necessary for the operator to be in the seat to start the engine.)
- Operator must be in seat when PTO is engaged, brake is disengaged, or speed control lever is moved out of neutral or engine will stop.
- Engine will stop if the hopper is raised while the PTO is engaged.

Operator Controls

- Steering and Motion Control:
  - Speed Control lever, located on RH console, sets maximum forward speed.
  - Steering levers, centered in front of the seat, control the speed and direction of travel of the respective drive wheels.
  - Moving speed control lever rearward to the neutral position places the drive system in neutral.

    Note: The machine may be moved in reverse while the speed control is in the neutral position by pulling back on the steering levers.
- PTO Engagement Lever: Engages drive to PTO (mower deck) and blower.
- Parking Brake Lever: Pull back to engage parking brake.

Seat

- Type: Standard seat with high back, foam padded cushions.
- Mounting: Seat is hinged to tilt up for access to hydraulic pumps and other components. The seat is held in the tilted position with a link.
- Armrests: None.
- Seat Safety Switch: Integral to the seat frame, serviceable. Time delay module incorporated into the Safety Interlock System eliminates rough ground cut-outs.

Hydrostatic Ground Drive System

- Hydrostatic Pumps: Two Hydro Gear variable displacement piston pumps.

- Wheel Motors: Hydro Gear planetary reduction motors.
- Hydraulic Oil Type: Use Exmark Premium Hydro oil.
- Hydraulic Oil Capacity: 6.0 qt. (5.7 L)
- Hydraulic Filter: Replaceable cartridge type.
  - Summer use above 32°F (0°C):

    P/N 109-4180: 25 microns, 10 psi bypass
  - Winter use below 32°F (0°C):

    P/N 1-523541: 40 microns, 18 psi bypass
- Speeds:
  - 0-7.0 mph (11.3 km/hr) forward.
  - 0-4.5 mph (7.2 km/hr) reverse.
- Drive wheel release valves allow machine to be moved when engine is not running.

Tires & Wheels

	Drive	Front Caster	Rear Caster
	Pneumatic (Air-Filled)	Semi-Pneumatic	Semi-Pneumatic
Quantity	2	2	1
Tread	"Multi-Trac C/S"	Smooth	Smooth
Size	18 x 10.50-10	8 x 3.00-4	13 x 8.00-6
Ply Rating	4		
Pressure	15 psi (103 kPa)		

Cutting Deck

- Cutting Width:
  - 42 inch Deck: 42 inch (106.7 cm)
  - 48 inch Deck: 48 inch (121.9 cm)
- Discharge: Center
- Blade Size: (2 ea.)
  - w/42 inch Deck: 22.00 inches (55.9 cm)
  - w/48 inch Deck: 25.00 inches (63.5 cm)
- Deck Drive:
  - Clutching belt on horizontal engine shaft. Dual "A" section hexagon belt with spring tensioned idler to jackshaft and blower.
  - Heavy-duty cast iron, spiral bevel gearbox is final drive to blades.
  - Gearbox Oil Type: Mobil SHC (synthetic) 75W-90 gear lube; 12oz per box.
- Deck:

  Full floating deck is attached to out-front support frame. Deck design allows for bagging or mulching.
- Deck Depth:
  - 42 inch Deck: 4 5/8 inches (11.7 cm)
  - 48 inch Deck: 4 5/8 inches (11.7 cm)

Dimensions

Overall Width:

Without Deck	42 inch Deck	48 inch Deck
42.6 inches (108.2 cm)	43.2 inches (109.7 cm)	49.2 inches (125.0 cm)

Overall Length:

Without Deck
67.3 inches (170.9 cm)

Deck Down

42 inch Deck	48 inch Deck
91.8 inches (233.2 cm)	94.5 inches (240.0 cm)

Deck Up

42 inch Deck	48 inch Deck
82.4 inches (209.3 cm)	81.8 inches (207.6 cm)

Overall Height:

Without Deck	42 inch Deck	48 inch Deck
51.2 inches (130.0 cm)	51.2 inches (130.0 cm)	51.2 inches (130.0 cm)

Tread Width: (Center to Center of Tires, Widthwise)

	42 inch Deck	48 inch Deck
Drive Wheels	32.7 inches (83.1 cm)	32.7 inches (83.1 cm)

Wheel Base: (Center of Drive Wheel to Center of Rear Caster Wheel)

42 inch Deck	48 inch Deck
44.2 inches (112.3 cm)	44.2 inches (112.3 cm)

Curb Weight:

42 inch Deck	48 inch Deck
1140 lb (517 kg)	1170 lb (531 kg)

Torque Requirements

Bolt Location	Torque
Blade Mounting Bolt	85-110 ft-lb (115-149 N-m)
Engine Mounting Bolts	30-35 ft-lb (41-47 N-m)
Wheel Lug Nuts	85-105 ft-lb (122-129 N-m)
Wheel Motor Mounting Bolts	72-77 ft-lb (115-142 N-m)
Wheel Hub Locknut	275-350 ft-lb (373-475 N-m)
Blade Driver Shear Bolts	80-100 in-lb (922-1130 N-cm)

Product Overview

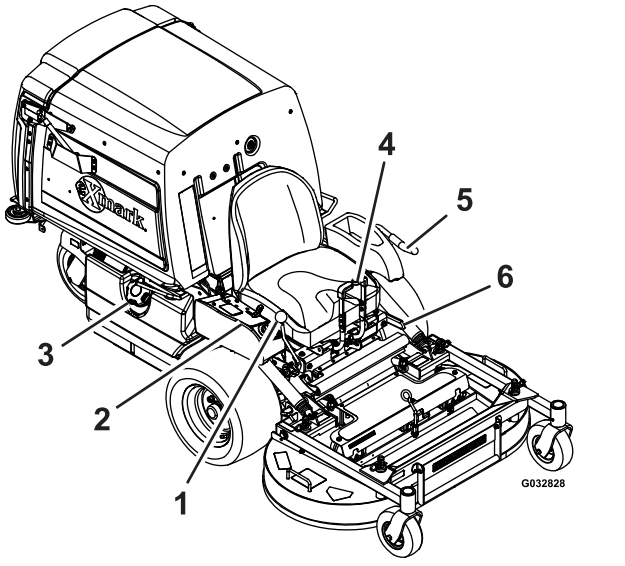

g032828

Figure 3

1. Speed Control Lever
2. Controls
3. Fuel Cap
4. Steering Levers
5. PTO Engagement Lever
6. Parking Brake Lever

Operation

Note: Determine the left and right sides of the machine from the normal operating position.

Controls

Become familiar with all the controls before starting the engine and operating the machine.

Steering Levers

Located in the center in front of the seat.

Pulling back on the steering levers, progressively slows, then reverses the direction of travel of the respective drive wheels.

By moving both steering levers an equal amount back, the machine can be slowed down or travel backward in a straight line.

Steering is controlled by varying the position of the steering levers relative to each other.

Speed Control Lever

Located on right hand console.

The speed control lever sets maximum forward speed.

Moving speed control lever rearward to the neutral position places the drive system in neutral.

Choke Control (All Models Except Kohler EFI)

Located on the control console front right hand side.

Choke is used to aid in starting a cold engine. The choke control is pulled out to be in the "ON" position and pushed in to be in the "OFF" position. Do Not run a warm engine with choke in the "ON" position.

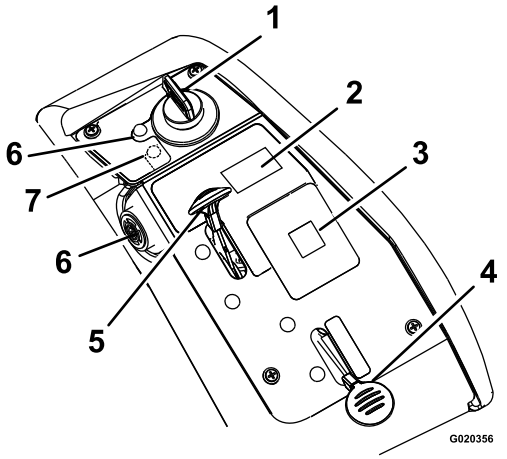

g020356

Figure 4

1. Ignition switch
2. Hopper switch
3. Message display
4. Choke (All Models Except EFI)
5. Throttle
6. Engine oil temperature light and buzzer
7. Check engine light (EFI Models Only)

Throttle Control

Located on right hand console.

The throttle is used to control engine speed. Moving throttle lever forward will increase engine speed and moving throttle lever to the rear will decrease engine speed.

Brake Lever

Located on left side of unit, between the seat and console.

The brake lever engages a parking brake on the drive wheels.

Pull the lever up and rearward to engage the brake.

Push the lever forward and down to disengage the brake.

The unit must be tied down and brake engaged when transporting.

Ignition Switch

Located on the right hand console.

The ignition switch is used to start and stop the engine. The switch has three positions "OFF", "ON" and "START". Insert key into switch and rotate

clockwise to the "ON" position. Rotate clockwise to the next position to engage the starter (key must be held against spring pressure in this position).

Note: Brake must be engaged, speed control lever rearward (neutral position) and PTO disengaged to start engine. (It is not necessary for the operator to be in the seat to start the engine.)

Hour Meter

Located on the right console in the message display (see Figure 4 and Figure 5).

The hour meter records the number of hours that the engine has run.

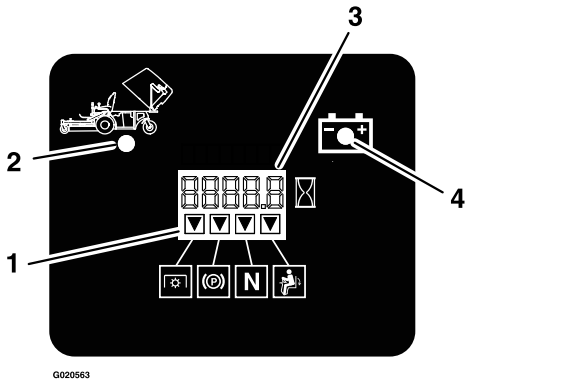

Figure 5

1. LCD Indicators
2. Hopper up
3. Hour/Voltage display
4. Low voltage indicator light

The hour meter is recording when the decimal point is flashing in Hour/Voltage display.

Hours are displayed when the key is off or when the machine is running.

Note: If the ignition key is turned to the "ON" position for a few seconds before cranking the engine, the battery voltage will display in the area where the hours are normally displayed.

Note: The LCD indicators appear when each control meets the "safe to start" mode (e.g. the indicator turns on when the operator is in the seat.)

Drive Wheel Release Valves

Located on the top left front corner of hydrostatic pumps.

Drive wheel release valves are used to release the hydrostatic drive system to allow the machine to be pushed without the engine running. Tilt seat up to gain access to pumps.

With a 7/16 wrench, turn both valves one turn counterclockwise to release drive system. Turn clockwise to reset system. **Do Not overtighten. Do Not tow machine.**

Tracking Adjustment Knob

Located under the seat on the left pump control link.

Rotating this knob allows fine tuning adjustments so that the machine tracks straight with the drive levers in the full forward position.

Drive the machine at 3/4 speed for at least 5 minutes to bring hydraulic oil up to operating temperature. Stop machine and wait for all moving parts to stop. Engage park brake. Tilt seat forward to gain access to the tracking knob. Rotate the knob towards the right to steer right and rotate towards the left to steer left. Adjust in 1/8 turn increments until the machine tracks straight. Check that the machine does not creep when in neutral with the park brakes disengaged.

Important: Do Not rotate the knob too far, as this may cause the machine to creep in neutral. Refer to the Motion Control Linkage Adjustment section in Maintenance.

PTO Engagement Lever

Located immediately left of the left console.

Lever must be moved up to the "ROTATE" position to engage the PTO and blower drives. Lever is moved down to the "STOP" position to stop the drives.

Engine Oil Temperature Light and Buzzer

Located on the right console.

The engine oil temperature light monitors the temperature of the engine oil. An illuminated engine oil temperature light and intermittent buzzing sound signals the engine is overheating.

Electronic Control Unit Malfunction Indicator

Kohler EFI Units Only:

The electronic control unit (ECU) continuously monitors operation of the EFI system. If a problem or fault within the system is detected, the malfunction indicator light (MIL) is illuminated. The MIL is the light located in the right console panel to the left of the ignition switch. Follow the troubleshooting steps outlined in the Kohler engine operator's manual if the MIL is illuminated.

Hopper Switch

Located on the right console (see Figure 4).

The hopper switch raises or lowers the hopper when dumping.

Before Operation

Before Operation Safety

- Evaluate the terrain to determine what accessories and attachments are needed to properly and safely perform the job. Only use accessories and attachments approved by Exmark.
- Inspect the area where the machine is to be used and remove all rocks, toys, sticks, wires, bones, and other foreign objects. These can be thrown or interfere with the operation of the machine and may cause personal injury to the operator or bystanders.
- This mower was designed for one operator only. Do not carry passengers.
- Wear appropriate personal protective equipment such as safety glasses, long pants, substantial slip-resistant footwear, and hearing protection. Tie back long hair and avoid loose clothing and loose jewelry which may get tangled in moving parts.
- This machine produces sound levels in excess of 85 dBA at the operator's ear and can cause hearing loss through extended periods of exposure. Wear hearing protection when operating this machine.
- Check that the following items are in place and in proper working condition: the operator presence controls, safety switches, guards, shields, discharge deflector and/or the entire grass catcher system. Do not operate the machine unless they are in proper working condition. Replace worn or deteriorated parts with genuine Exmark parts when necessary.

⚠ DANGER

It is essential that operator safety mechanisms be connected and in proper operating condition prior to use. Contacting the blade will result in serious personal injury.

Shut off the engine, remove the key, and wait for all moving parts to stop before leaving the operating position. When the key is turned to the "OFF" position, the engine should shut off and the blade should stop. If not, stop using the machine immediately and contact an Authorized Service Dealer.

- Do Not operate the mower when people, especially children, or pets are in the area. Shut off the machine and attachment(s) if anyone enters the area.
- Do Not operate the machine without the entire grass collection system, discharge deflector, or other safety devices in place and in proper working condition. Grass catcher components are subject to wear, damage and deterioration, which could expose moving parts or allow objects to be thrown. Frequently check for worn or deteriorating components and replace them with the manufacturer's recommended parts when necessary.

Fuel Safety

⚠ DANGER

Gasoline is extremely flammable and vapors are explosive.

A fire or explosion from gasoline can burn you, others, and cause property damage.

- **Fill the fuel tank outdoors on level ground, in an open area, when the engine is cold. If fuel is spilled, Do Not attempt to start the engine. Move away from the area of the spill and avoid creating any source of ignition until fuel vapors have dissipated.**
- **Do Not refill the fuel tank or drain the machine indoors or inside an enclosed trailer.**
- **Never smoke when handling gasoline, and stay away from an open flame or where gasoline fumes may be ignited by spark.**
- **Add fuel before starting the engine. Never remove the cap of the fuel tank or add fuel when engine is running or when the engine is hot.**
- **Store gasoline in an approved container and keep it out of the reach of children.**
- **Do Not operate without entire exhaust system in place and in proper working condition.**

- In certain conditions during fueling, static electricity can be released causing a spark which can ignite gasoline vapors.
  - Do Not fill containers inside a vehicle or on a truck or trailer bed with a plastic liner. Always place containers on the ground and away from your vehicle before filling.
  - When practical, remove gas-powered equipment from the truck or trailer and refuel the equipment with its wheels on the ground. If this is not possible, then refuel such equipment on a truck or trailer from a portable container, rather than from a gasoline dispenser nozzle.
  - If a gasoline dispenser nozzle is used, keep the nozzle in contact with the rim of the fuel tank or container opening at all times until fueling is complete. Do Not use a nozzle lock open device.
- Do Not overfill the fuel tank. Fill the fuel tank to the bottom of the filler neck. The empty space in the tank allows gasoline to expand. Overfilling may result in fuel leakage or damage to the engine or emission system.
- Gasoline is harmful or fatal if swallowed. Long-term exposure to vapors may cause serious injury and illness.
  - Avoid prolonged breathing of vapors.
  - Keep face away from nozzle and gas tank/container opening.
  - Keep away from eyes and skin.
- To help prevent fires:
  - Keep engine and engine area free from accumulation of grass, leaves, excessive grease or oil, and other debris which can accumulate in these areas.
  - Clean up oil and fuel spills and remove fuel soaked debris.
  - Allow the machine to cool before storing the machine in any enclosure. Do Not store the machine or fuel container, or refuel, where there is an open flame, spark, or pilot light such as on a water heater or other appliance.

Operating Instructions

During Operation Safety

General Safety Information

The operator must use their full attention when operating the machine. **Do Not** engage in any activity that causes distractions; otherwise, injury or property damage may occur.

⚠ WARNING

Operating engine parts, especially the muffler, become extremely hot. Severe burns can occur on contact and debris, such as leaves, grass, brush, etc. can catch fire.

Clean the machine as stated in the Maintenance section. Keep engine and engine area free from accumulation of grass, leaves, excessive grease or oil, and other debris which can accumulate in these areas.

⚠ WARNING

Operating a Navigator tractor without an approved Exmark front mount attachment increases the possibility of operator entanglement in drive wheels or forward tip over. Entanglement or tip-over could cause serious injury or death.

When operating a Navigator tractor without an approved Exmark front mount attachment, observe the following:

- **Keep feet and clothing away from tires.**
- **Limit operation to minimum required to install a different front mount attachment.**
- **Minimize speed and use extreme caution.**
- **Only operate on a flat level surface.**
- **Do Not operate up or down a trailer ramp.**
- **Avoid sudden acceleration or deceleration.**

- Operate the engine only in well-ventilated areas. Exhaust gases contain carbon monoxide, which is an odorless deadly poison.
- Do Not operate the machine while ill, tired, or under the influence of alcohol or drugs.
- Operate the machine only in good visibility and appropriate weather conditions. Do Not operate the machine when there is the risk of lightning.
- Keep away from holes, ruts, bumps, rocks, and other hidden hazards. Use care when approaching blind corners, shrubs, trees, tall grass or other objects that may hide obstacles or obscure vision. Uneven terrain could overturn the machine.
- Start the engine with your feet well away from the blades.
- Do Not operate the machine without all safety shields, guards, switches, and other devices in place and in proper working condition.
- Keep your hands and feet away from the moving parts. Keep clear of the discharge opening.
- Do Not mow with the discharge deflector raised, removed, or altered unless there is a grass-collection system or mulch kit in place and working properly.
- Never raise the deck with blades running.
- Be aware of the mower discharge path and direct discharge away from others. Avoid discharging material against a wall or obstruction as the material may ricochet back toward the operator. Stop the blades, slow down, and use caution when crossing surfaces other than grass and when transporting the mower to and from the area to be mowed.
- Be alert, slow down and use caution when making turns. Do Not mow in reverse unless it is absolutely necessary. Always look down and behind you before moving the machine in reverse.
- Park the machine on level ground. Stop engine, wait for all moving parts to stop, and remove key.
  - Before checking, cleaning or working on the mower.
  - After striking a foreign object or abnormal vibration occurs (inspect the mower for damage and make repairs before restarting and operating the mower).
  - Before clearing blockages.
  - Whenever you leave the mower. Do Not leave a running machine unattended.
- Stop engine, wait for all moving parts to stop:
  - Before refueling.
  - Before dumping the grass catcher.
  - Before making height adjustments.
- Tragic accidents can occur if the operator is not alert to the presence of children. Children are often attracted to the machine and the mowing activity. Never assume that children will remain where you last saw them.
  - Keep children out of the mowing area and under the watchful care of another responsible adult, not the operator.
  - Be alert and turn the machine off if children enter the area.
  - Before and while backing or changing direction, look behind, down, and side-to-side for small children.
  - Never allow children to operate the machine.
  - Do Not carry children, even with the blades shut off. Children could fall off and be seriously injured or interfere with the safe operation of the machine. Children that have been given rides in the past could suddenly appear in the working area for another ride and be run over or backed over by the machine.
- Do Not use the machine as a towing vehicle unless it has a hitch installed. Attach towed equipment to the machine only at the hitch point.

Slope Safety

- Slopes are a major factor related to loss of control and rollover accidents, which can result in severe injury or death. The operator is responsible for safe slope operation. Operating the machine on any slope requires extra caution. Before using the machine on a slope, the operator must:
  - Review and understand the slope instructions in the manual and on the machine.
  - Use an angle indicator to determine the approximate slope angle of the area.
  - Never operate on slopes greater than 15 degrees.
  - Evaluate the site conditions of the day to determine if the slope is safe for machine operation. Use common sense and good judgment when performing this evaluation. Changes in the terrain, such as moisture, can quickly affect the operation of the machine on a slope.
- Identify hazards at the base of the slope. Do Not operate the machine near drop offs, ditches, embankments, water or other hazards. The machine could suddenly roll over if a wheel goes over the edge or the edge collapses. Keep a safe distance (twice the width of the machine) between the machine and any hazard. Use a walk behind machine or a hand trimmer to mow the grass in these areas.

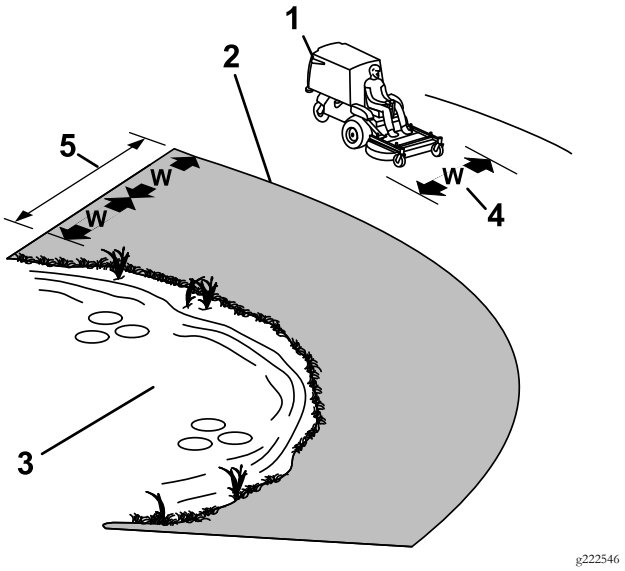

Figure 6

1. Safe Zone-Use the mower here on slopes less than 15 degrees
2. Danger Zone-Use a walk-behind mower and/or hand trimmer on slopes greater than 15 degrees
3. Water
4. W=width of the machine
5. Keep a safe distance (twice the width of the machine) between the machine and any hazard.

- Avoid starting, stopping or turning the machine on slopes. Avoid making sudden changes in speed or direction; turn slowly and gradually.
- Do Not operate a machine under any conditions where traction, steering or stability is in question. Be aware that operating the machine on wet grass, across slopes or downhill may cause the machine to lose traction. Loss of traction to the drive wheels may result in sliding and a loss of braking and steering. The machine can slide even if the drive wheels are stopped.
- Remove or mark obstacles such as ditches, holes, ruts, bumps, rocks or other hidden hazards. Tall grass can hide obstacles. Uneven terrain could overturn the machine.
- Use extra care while operating with accessories or attachments, such as grass collection systems. These can change the stability of the machine and cause a loss of control. Follow directions for counter weights.
- Keep the deck lowered to the ground while operating on slopes. Raising the deck while operating on slopes can cause the machine to become unstable.

Starting the Engine

1. Move the speed control lever to the neutral position.
2. Pull up and back on the parking brake lever to engage the parking brake.
3. Push the PTO engagement lever down to the "STOP" position.

   Note: It is not necessary for the operator to be in the seat to start the engine.
4. Place the throttle midway between the "SLOW" and "FAST" positions.
5. On a cold engine, push the choke lever forward into the "ON" position (except Kohler EFI).

   On a warm engine, leave the choke in the "OFF" position.
6. Turn ignition switch to the "START" position. Release the switch as soon as the engine starts.

   Important: Do Not crank the engine continuously for more than ten seconds at a time. If the engine does not start, allow a 60 second cool-down period between starting attempts. Failure to follow these guidelines can burn out the starter motor.
7. If the choke is in the "ON" position, gradually return choke to the "OFF" position as the engine warms up.

Engaging the PTO

⚠ DANGER

The rotating blades under the mower deck are dangerous. Blade contact will cause serious injury or death.

Do Not put hands or feet under the mower or mower deck when the blades are engaged.

⚠ DANGER

An uncovered discharge opening will allow objects to be thrown in an operator's or bystander's direction. Also, contact with the blower blades could occur. Thrown objects or blade contact can cause serious injury or death.

Never operate the mower with the hopper or hopper door raised, removed, or altered unless there is a mulch kit in place and working properly.

The PTO lever engages the PTO and blower. Be sure that the hopper is down, the hopper door is securely closed, and all persons are clear of the mower deck and discharge area before engaging PTO.

Important: Operator must be in seat before the PTO can be engaged.

1. Set the throttle to the "MIDWAY" position.
2. Pull the PTO lever upward until locked over center.
3. Place the throttle in the "FAST" position to begin mowing.

Disengaging the PTO

1. Set the throttle to the "MIDWAY" position.
2. Push PTO lever down to the "STOP" position stopping the PTO and blower.

Stopping the Engine

1. Bring the unit to a full stop.
2. Disengage the PTO.
3. Move speed control lever to the neutral position.
4. Engage the parking brake.
5. Place the throttle midway between the "SLOW" and "FAST" positions.
6. Allow the engine to run for a minimum of 15 seconds, then turn the ignition switch to the "OFF" position to stop the engine.
7. Remove the key to prevent children or other unauthorized persons from starting engine.

Driving the Machine

⚠ CAUTION

Machine can spin very rapidly by positioning one lever too much ahead of the other. Operator may lose control of the machine, which may cause damage to the machine or injury.

- **Use caution when making turns.**
- **Slow the machine down before making sharp turns.**

Important: To begin movement (forward or backward) the operator must be in the seat, the brake lever must be disengaged (pushed down) before the speed control lever can be moved forward or the engine will stop.

Driving Forward

1. Start the engine.
2. Release the parking brake.
3. To move forward in a straight line move the speed control lever forward.

   To turn left or right, pull one of the steering levers back toward neutral in the direction desired.

   The machine will move faster the farther the speed control lever is moved away from neutral.
4. To stop, pull the speed control lever back to the neutral position.

Driving in Reverse

1. To move rearward in a straight line applying equal pressure pull both steering levers rearward.

   To turn left or right, release pressure on the steering lever toward the direction desired.
2. To stop, release the steering levers to the neutral position.

Adjusting the Cutting Height

The cutting height of the mower deck is adjusted from 1 to 4 inches (2.5 cm to 10.2 cm) in 1/4 inch (.63 cm) increments.

1. Stop the machine and move the speed control levers to the neutral position.
2. Disengage the PTO.
3. Engage the park brake.
4. Stop the engine, remove the key and wait for all moving parts to stop.
5. While keeping the front frame down, lift the deck on one side so the deck support latch engages the fixed pin in the front frame (Figure 7).
6. Move cotter pins on the deck support pins to proper hole for height of cut desired.
7. Lift the deck enough to raise and release the deck support latch and lower the deck.
8. Repeat steps 5-7 for the other side of the deck.

Raising the Mower Deck into Service Position

1. Stop engine, wait for all moving parts to stop and remove key. Engage parking brake.

⚠ WARNING

Incorrectly raising or lowering a mower deck can be dangerous. A dropped mower deck can result in a serious injury or property damage.

- **Always raise and lower deck on flat, dry ground, free of any obstructions.**
- **Firmly grasp the deck lift handle and lower in a slow controlled manner.**
- **Always make sure the deck is securely latched in the "up" or "down" position.**

2. Release the deck locking pins on each side (Figure 7).

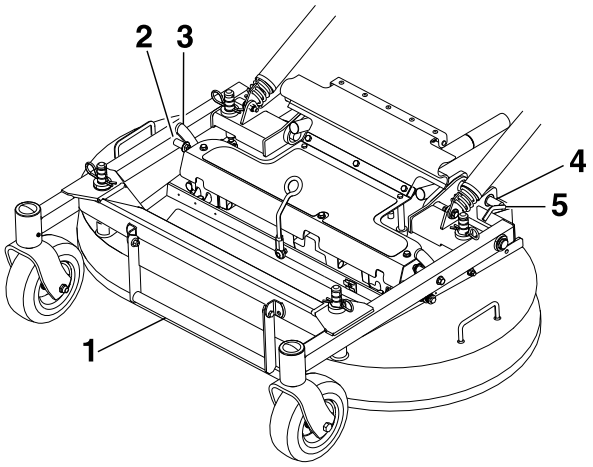

Figure 7

1. Deck lift handle
2. Pin
3. Deck support latch
4. Rotate the deck locking pin toward the rear and pull outward to unlock.
5. Push the deck locking pin in and rotate toward the front to lock.

3. Using deck lift handle, lift deck up and latch in "up" position (latch is located at front center of seat) (see Figure 8).

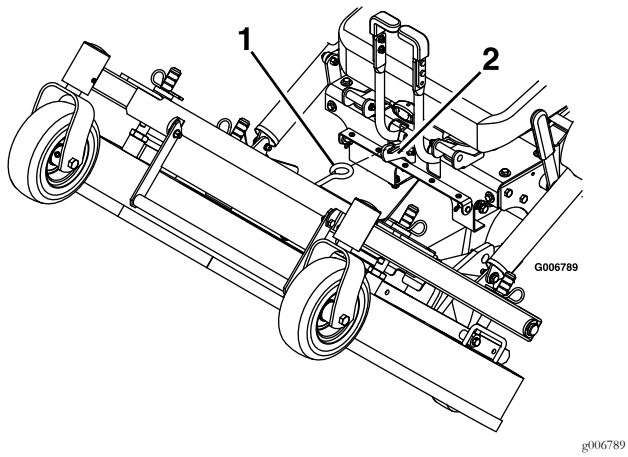

Figure 8

1. Secure the deck in the raised position by securing the deck latch onto the hook.
2. Hook

⚠ WARNING

Operating the mower deck in the raised service position can be dangerous. Engaging the PTO with a deck in the raised position can result in a serious injury or property damage.

Always lower and lock mower deck in the operation position before engaging the PTO.

Lowering the Mower Deck to the Operating Position

1. While firmly holding onto deck lift handle, unhook deck latch from tractor section and slowly lower deck to ground (see Figure 8).
2. Push deck locking pins inward and rotate forward to securely lock deck in lowered position (see Figure 7).

⚠ WARNING

Operating mower without locking pins securely latched can result in the mower deck folding up unexpectedly. The mower deck folding up unexpectedly can cause serious injury.

Always operate mower with locking pins securely latched.

Adjusting Fill Reduction System (FRS) Baffles

The Navigator's exclusive Fill Reduction System has been designed to allow you to reduce the amount of clippings collected by varying degrees.

Advantages include less frequent emptying of the hopper and return of nutrients to the soil.

Possible Configurations:

1. Baffles open, standard blades – Maximum collection
2. Baffles closed, standard blades – Partial mulching
3. Baffles closed, mulch blades – Intermediate mulching
4. Mulch plug installed, mulch blades – Complete mulching (requires mulch kit)

To adjust the FRS baffles:

1. Stop engine, wait for all moving parts to stop and remove key. Engage parking brake.
2. Remove hair pins and clevis pins from both sides of the PTO guard (see Figure 9). Fold guard forward.

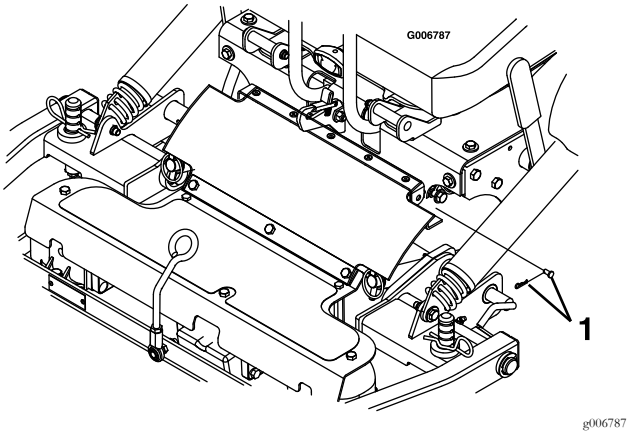

Figure 9

3. Loosen nyloc nuts on the rear studs of the FRS baffles.

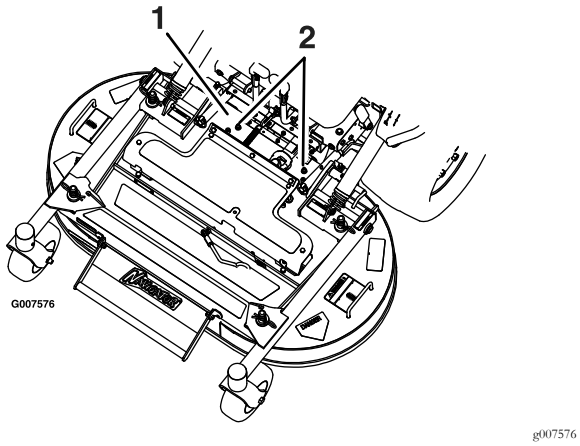

Figure 10

1. PTO guard removed for clarity
2. Loosen nyloc nuts

4. Raise deck as stated in **Raising the Mower Deck to the Service Position** section.
5. Remove bolt and washer at the front of each of the FRS baffles. Rotate baffles into desired position and reinstall bolt and washer.

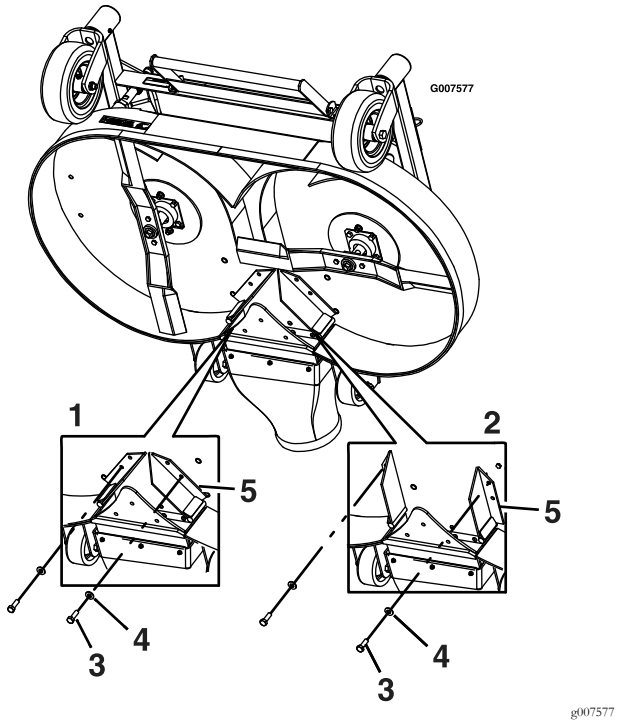

Figure 11

1. Baffles shown in closed position
2. Baffles shown in open position
3. Bolt
4. Washer
5. Baffles

6. Lower deck per **Lowering the Mower Deck to the Operating Position** section.
7. Snug nyloc nuts on the rear studs of the FRS baffles. These nuts may be left slightly loose if frequent baffle adjustment is anticipated.
8. Reinstall PTO guard using clevis pins and hair pins removed in step 2.

Removing the Deck

⚠ WARNING

Operating a Navigator tractor without an approved Exmark front mount attachment increases the possibility of operator entanglement in drive wheels or forward tip over. Entanglement or tip-over could cause serious injury or death.

When operating a Navigator tractor without an approved Exmark front mount attachment, observe the following:

- **Keep feet and clothing away from tires.**
- **Limit operation to minimum required to install a different front mount attachment.**
- **Minimize speed and use extreme caution.**
- **Only operate on a flat level surface.**
- **Do Not operate up or down a trailer ramp.**
- **Avoid sudden acceleration or deceleration.**

Important: Do Not transport Navigator tractor without an approved Exmark front mount attachment.

1. Stop engine, wait for all moving parts to stop, and remove key. Engage parking brake.
2. Raise mower deck up and latch with deck locking pins per **Raising the Mower Deck to the Service Position** section in Operation.
3. Remove hairpins and washers at the top of the deck lift assist spring on each side of the unit (see Figure 12).

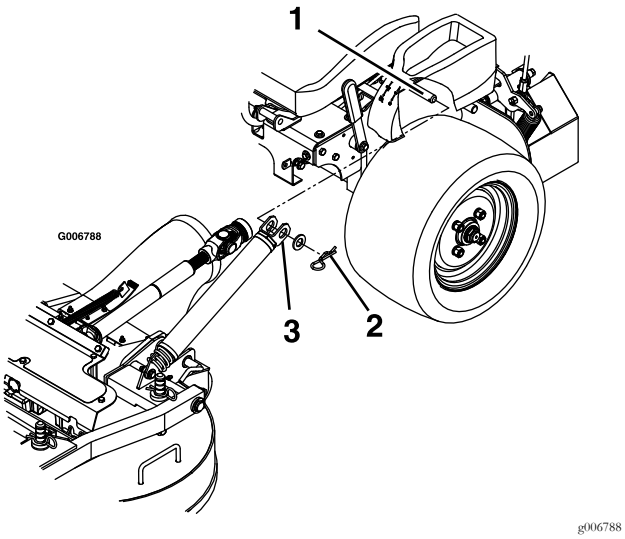

Figure 12

1. Spring anchor pin under console
2. Secure springs with a washer and hairpin
3. Slide spring onto spring anchor pin

4. Remove the spring from the spring anchor. Repeat for other side of unit.
5. Un-latch deck from raised position and slowly lower deck to ground per **Lowering the Mower Deck to the Operation Position** section in Operation.

   Note: Deck will become heavier once springs are removed from the anchors. Lower deck carefully.
6. Remove lynch pins at front of push arms on both sides of the unit (see Figure 13).

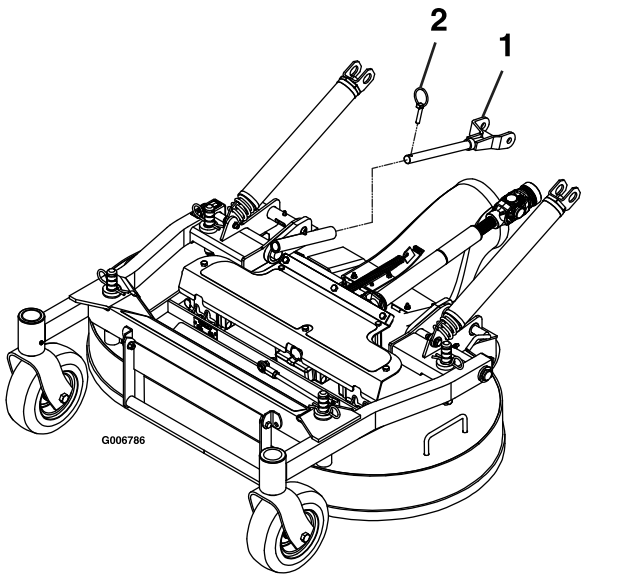

Figure 13

1. Slide the push arm into the deck push arm tube
2. Secure the push pin arm with lynch pin

7. Remove hairpin and clevis from both sides of the PTO guard (see Figure 14).

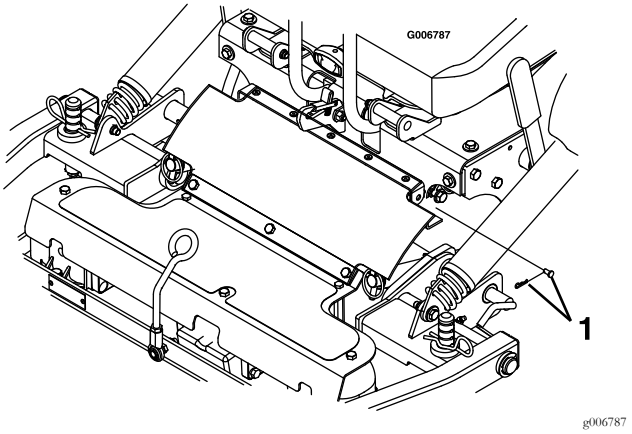

Figure 14

1. Secure PTO guard with clevis pin and hairpin

8. Raise seat and disconnect drive shaft using quick coupler at jackshaft (see Figure 15).

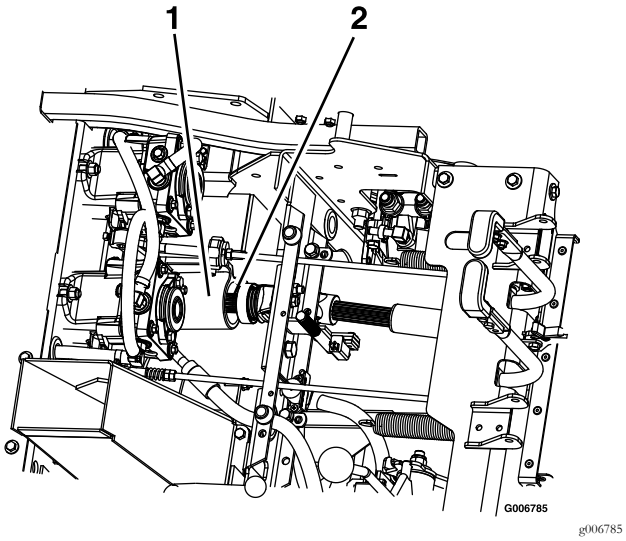

Figure 15

1. Jackshaft
2. Drive shaft

9. Pull mower deck forward to remove from unit.

Installing the Deck

Important: Do Not transport Navigator tractor without an approved Exmark front mount attachment.

1. Stop engine, wait for all moving parts to stop and remove key. Engage parking brake.
2. Roll the mower deck up to the Navigator tractor with the discharge tube down, making sure the deck springs are located above the drive wheel and below the console on each side.
3. Raise seat and install drive shaft onto jackshaft (see Figure 15)
4. Align deck push arm tubes to tractor push arms and push deck rearward. Secure push arms with lynch pins on left and right sides of the unit (see Figure 13).
5. Align upper portion of the PTO rubber guard to the tabs on the front of the console and secure with a clevis pin and hairpin on each side (see Figure 14).
6. Release the deck locking pins on each side, raise mower deck to the service position and secure deck latch onto hook. See **Raising the Deck to the Service Position** section in Operation.
7. Install springs onto the spring anchor pins under the left and right consoles and secure with a washer and hairpin (see Figure 12).
8. Un-latch deck from raised position, slowly lower deck to ground and lock deck locking pins on each side **Lowering the Deck to the Operation Position** section in Operation.

Emptying Hopper

1. A full hopper is indicated by a buzzer located behind the operator in the hopper. Empty hopper when buzzer sounds to prevent clogging of the blower or deck.
2. Disengage PTO, move speed control to neutral, set park brake and dismount unit to dump hopper.
3. Make sure unit is on a dry level surface.
4. Lift the rear door up and allow it to rest on top of hopper.
5. Turn the key to the "ON" position and press the hopper switch to raise the hopper to dump the contents; press the switch to lower the hopper.
6. Turn the key "OFF" and lower the rear door.

Clearing Hopper Screen

Screen may be removed by firmly lifting screen handles (see Figure 16).

Pull screen towards the back to remove. Gently tap debris from the screen as needed.

Excessive build-up on the screen can cause the blower to plug.

Note: In conditions where the screen clogs quickly, the front removable screen panel can be turned and reinstalled under the primary screen to allow free air flow from the hopper.

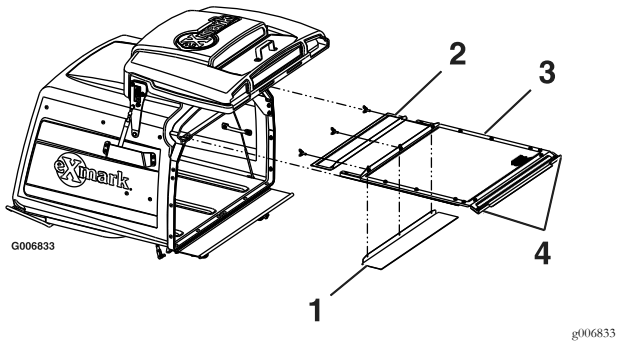

Figure 16

1. Front removable screen can be rotated and stored for wet conditions
2. Front removable screen
3. Primary screen
4. Handles.

After Operation

General Safety

- Park machine on level ground, disengage drives, set parking brake, stop engine, and remove key. Wait for all moving parts to stop before leaving the operator's position. Allow the machine to cool before servicing, adjusting, fueling, cleaning, or storing.
- Clean grass, leaves, excessive grease or oil, and other debris from the mower deck, muffler, drives, grass catcher, and engine area to help prevent fires.
- Close the fuel shut-off valve before storing or transporting the machine.

Transporting

Transporting the Machine

Use a heavy-duty trailer or truck to transport the machine. Ensure that the trailer or truck has all necessary lighting and marking as required by law. Thoroughly read all of the safety instructions. Knowing this information could help you, your family, pets, or bystanders avoid injury.

To transport the machine:

- Lock the brake and block the wheels.
- Be sure the fuel shut-off valve is closed.
- Securely fasten the machine to the trailer or truck with straps, chains, cable, or ropes. If possible, both front and rear straps should be directed down and outward from the machine.
- Secure a trailer to the towing vehicle with safety chains.

⚠ WARNING

Driving on the street or roadway without turn signals, lights, reflective markings, or a slow moving vehicle emblem is dangerous and can lead to accidents causing personal injury.

Do not drive machine on a public street or roadway.

Loading the Machine

Use extreme caution when loading machine on trailers or trucks. One full width ramp is required. If it is not possible to use one full width ramp, use enough individual ramps to simulate a full width continuous ramp.

Ramp should be long enough so that the angles between the ramp and the ground and the ramp and the trailer or truck do not exceed 15°. A steeper angle may cause mower deck components to get caught as the machine moves from ramp to trailer or truck. Steeper angles may also cause the machine to tip. If loading on or near a slope, position the trailer or truck so it is on the down side of the slope and the ramp extends up the slope. This will minimize the ramp angle. The trailer or truck should be as level as possible.

⚠ WARNING

Loading a machine on a trailer or truck increases the possibility of tip-over. Tip-over could cause serious injury or death.

- **Use extreme caution when operating a machine on a ramp.**
- **Use only a single, full width ramp; Do Not use individual ramps for each side of the machine.**
- **If individual ramps must be used, use enough ramps to create an unbroken ramp surface wider than the machine.**
- **Do Not exceed a 15° angle between ramp and ground or between ramp and trailer or truck.**
- **Avoid sudden acceleration while driving machine on a ramp.**

Important: Do Not attempt to turn the machine while on the ramp, you may lose control and drive off the side.

Avoid sudden acceleration when driving on a ramp.

Maintenance

Note: Determine the left and right sides of the machine from the normal operating position.

Maintenance Safety

- Park machine on level ground, disengage drives, set parking brake, stop engine, and remove key. Wait for all moving parts to stop before leaving the operator's position. Allow the machine to cool before servicing, adjusting, fueling, cleaning, or storing.
- If you leave the key in the switch, someone could accidently start the engine and seriously injure you or other bystanders. Remove the key from the switch before you perform any maintenance.
- Never allow untrained personnel to service machine.
- Disconnect battery or remove spark plug wire before making any repairs. Disconnect the negative terminal first and the positive last. Reconnect positive first and negative last.
- Keep all guards, shields, switches, and all safety devices in place and in proper working condition. Frequently check for worn or deteriorating components and replace them with genuine Exmark parts when necessary.

⚠ WARNING

Removal or modification of original equipment, parts and/or accessories may alter the warranty, controllability, and safety of the machine. Unauthorized modifications to the original equipment or failure to use original Exmark parts could lead to serious injury or death. Unauthorized changes to the machine, engine, fuel or venting system, may violate applicable safety standards such as: ANSI, OSHA and NFPA and/or government regulations such as EPA and CARB.

⚠ WARNING

Hydraulic fluid escaping under pressure can penetrate skin and cause injury. Fluid accidentally injected into the skin must be surgically removed within a few hours by a doctor familiar with this form of injury or gangrene may result.

- **If equipped, make sure all hydraulic fluid hoses and lines are in good condition and all hydraulic connections and fittings are tight before applying pressure to hydraulic system.**
- **Keep body and hands away from pinhole leaks or nozzles that eject high pressure hydraulic fluid.**
- **Use cardboard or paper, not your hands, to find hydraulic leaks.**
- **Safely relieve all pressure in the hydraulic system by placing the motion control levers in neutral and shutting off the engine before performing any work on the hydraulic system.**

For Kohler EFI (Electronic Fuel Injection) Units:

⚠ WARNING

Fuel system components are under high pressure. The use of improper components can result in system failure, gasoline leakage and possible explosion.

Use only approved fuel lines and fuel filters for high pressure systems.

- Use care when checking blades. Wrap the blade(s) or wear gloves, and use caution when servicing them. Only replace damaged blades. Never straighten or weld them.
- Do not rely solely on mechanical or hydraulic jacks for support. Use adequate jack stands.
- Carefully release pressure from components with stored energy.

- Keep your hands and feet away from moving parts or hot surfaces. If possible, do not make adjustments with the engine running.
- Keep all parts in good working condition and all hardware tightened, especially the blade-attachment hardware.

Recommended Maintenance Schedule(s)

Maintenance Service Interval	Maintenance Procedure
After the first 5 hours	• Change the engine oil.
After the first 50 hours	• Change oil in all three gearbox housings.
After the first 100 hours	• Change the hydraulic filter and fluid. • Check the wheel hub locknuts torque specification. • Check the wheel lug nut torque specification.
Before each use or daily	• Check the engine oil level. • Check the mower blades. • Check the safety interlock system. • Check stop time of moving drive components. • Check the belts for wear. • Check the brake band. • Check the pulleys. • Check for loose hardware. • Grease the front caster wheel hub. • Remove accumulated debris from engine (see Cleaning section.) • Clean the grass and debris build-up from the machine. • Clean the grass and debris build-up from the cutting deck. • Clean the grass build-up from under the deck.
Every 40 hours	• Check the hydraulic oil level. • Check the tire pressures. • Check the condition of the belts. • Grease the drive shaft.
Every 50 hours	• Service the air cleaner. (May need more often under severe conditions. See the Engine Owner's Manual for additional information.)
Every 80 hours	• Remove engine shrouds and clean cooling fins (see Cleaning section.)
Every 100 hours	• Change the engine oil. (May need more often under severe conditions.) • Check oil in all three gearbox housings. • Grease the deck flip-up. • Grease the pivot arm tubes.
Every 160 hours	• Lubricate the brake handle pivot. • Lubricate the brake rod bushings. • Lubricate the steering linkage rod ends. • Lubricate hopper switch actuator • Check the spark plugs.
Every 500 hours	• Change the hydraulic filter and fluid (Every 250 hours/yearly if using Mobil 1 15W50) • Check the wheel hub locknuts torque specification. • Check the wheel lug nut torque specification.

Maintenance Service Interval	Maintenance Procedure
Every 2,000 hours	• Change oil in all three gearbox housings.
Yearly	• Lubricate grease fittings. • Grease the front caster pivots. • Lubricate the rear caster wheel hubs.

Periodic Maintenance

Engine Maintenance

Important: Refer to the Engine Owner's Manual for additional maintenance procedures.

Engine Safety

⚠ WARNING

The engine can become very hot, especially the muffler and exhaust components. Touching a hot engine can cause severe burns.

Allow the engine to cool completely before service or making repairs around the engine area.

Do Not change the engine governor setting or overspeed the engine.

Check Engine Oil Level

Service Interval: Before each use or daily

1. Stop engine and wait for all moving parts to stop. Make sure unit is on a level surface.
2. Check with engine cold.
3. Raise hopper.
4. Clean area around dipstick. Remove dipstick and wipe oil off. Reinsert the dipstick and push it all the way down into the tube. Remove the dipstick and read the oil level.
5. If the oil level is low, wipe off the area around the oil fill cap, remove cap and fill to the "FULL" mark on the dipstick. Exmark 4-Cycle Premium Engine Oil is recommended; refer to the Engine Owner's manual for an appropriate API rating and viscosity. **Do Not** overfill.

Important: Do Not operate the engine with the oil level below the "LOW" (or "ADD") mark on the dipstick, or over the "FULL" mark.

Check Battery Charge

Service Interval: As required

Allowing batteries to stand for an extended period of time without recharging them will result in reduced performance and service life. To preserve optimum battery performance and life, recharge batteries in storage when the open circuit voltage drops to 12.4 volts.

Note: To prevent damage due to freezing, battery should be fully charged before putting away for winter storage.

Charge batteries in an open well ventilated area, away from spark and flames. Unplug charger before connecting or disconnecting from battery. Wear protective clothing and use insulated tools.

⚠ DANGER

Charging or jump starting the battery may produce explosive gases. Battery gases can explode causing serious injury.

- **Keep sparks, flames, or cigarettes away from battery.**
- **Ventilate when charging or using battery in an enclosed space.**
- **Make sure venting path of battery is always open once battery is filled with acid.**
- **Always shield eyes and face from battery.**

⚠ DANGER

Battery electrolyte contains sulfuric acid, which is poisonous and can cause severe burns. Swallowing electrolyte can be fatal or if it touches skin can cause severe burns.

- **Wear safety glasses to shield eyes, and rubber gloves to protect skin and clothing when handling electrolyte.**
- **Do Not swallow electrolyte.**
- **In the event of an accident, flush with water and call a doctor immediately.**

⚠ CAUTION

If the ignition is in the "ON" position there is potential for sparks and engagement of components. Sparks could cause an explosion or moving parts could accidentally engage causing personal injury.

Be sure ignition switch is in the "OFF" position before charging the battery.

Check the voltage of the battery with a digital voltmeter or with the message display. If the ignition key is turned to the "on" position for a few seconds, the battery voltage will be displayed in the area where the hours are normally displayed. Locate the voltage reading of the battery in the table and charge the battery for the recommended time interval to bring the charge up to a full charge of 12.6 volts or greater.

Important: Make sure the negative battery cable is disconnected and the battery charger used for charging the battery should have an output of 16 volts and 7 amps or less to avoid damaging the battery (see chart for recommended charger settings). This is especially important on Kohler EFI (Electronic Fuel Injection) units. Failure to do so may damage the ECU (Electronic Control Unit).

Voltage Reading	Percent Charge	Maximum Charger Settings	Charging Interval
12.6 or greater	100%	16 volts/7 amps	No Charging Required
12.4 – 12.6	75–100%	16 volts/7 amps	30 Minutes
12.2 – 12.4	50–75%	16 volts/7 amps	1 Hour
12.0–12.2	25–50%	14.4 volts/4 amps	2 Hours
11.7–12.0	0–25%	14.4 volts/4 amps	3 Hours
11.7 or less	0%	14.4 volts/2 amps	6 Hours or More

Important: For Kohler EFI units: Unplug the harness from the ECU before performing any welding on the equipment.

Recommended Jump Starting Procedure

Service Interval: As required

1. Check the weak battery for terminal corrosion (white, green, or blue "snow"), it must be cleaned off prior to jump starting. Clean and tighten connections as necessary.

⚠ CAUTION

Corrosion or loose connections can cause unwanted electrical voltage spikes at anytime during the jump starting procedure.

Do Not attempt to jump start with loose or corroded battery terminals or damage to the engine or EFI may occur.

⚠ DANGER

Jump starting a weak battery that is cracked, frozen, has low electrolyte level, or an open/shorted battery cell, can cause an explosion resulting in serious personal injury.

Do Not jump start a weak battery if these conditions exist.

2. Make sure the booster is a good and fully charged lead acid battery at 12.6 volts or greater. Use properly sized jumper cables (4 to 6 AWG) with short lengths to reduce voltage drop between

systems. Make sure the cables are color coded or labeled for the correct polarity.

⚠ CAUTION

Connecting the jumper cables incorrectly (wrong polarity) can immediately damage the electrical and/or EFI system.

Be certain of battery terminal polarity and jumper cable polarity when hooking up batteries.

Note: The following instructions are adapted from the SAE J1494 Rev. Dec. 2001 – Battery Booster Cables – Surface Vehicle Recommended Practice (SAE – Society of Automotive Engineers).

⚠ WARNING

Batteries contain acid and produce explosive gases.

- **Shield the eyes and face from the batteries at all times.**
- **Do Not lean over the batteries.**

Note: Be sure the vent caps are tight and level. Place a damp cloth, if available, over any vent caps on both batteries. Be sure the vehicles do not touch and that both electrical systems are off and at the same rated system voltage. These instructions are for negative ground systems only.

3. Connect the positive (+) cable to the positive (+) terminal of the discharged battery that is wired to the starter or solenoid as shown in Figure 17.

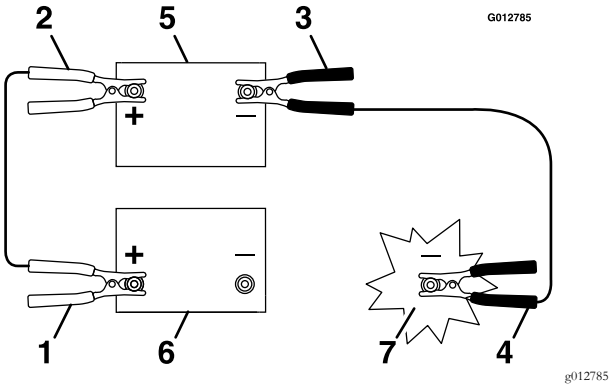

Figure 17

1. Positive (+) cable on discharged battery
2. Positive (+) cable on booster battery
3. Negative (–) cable on the booster battery
4. Negative (–) cable on the engine block
5. Booster battery
6. Discharged battery
7. Engine block

4. Connect the other end of the positive cable to the positive terminal of the booster battery.
5. Connect the black negative (–) cable to the other terminal (negative) of the booster battery.
6. MAKE THE FINAL CONNECTION ON THE ENGINE BLOCK OF THE STALLED VEHICLE (NOT TO THE NEGATIVE POST) AWAY FROM THE BATTERY. STAND BACK.
7. Start the vehicle and remove the cables in the reverse order of connection (the engine block (black) connection is the first to disconnect).

Check Mower Blades

Service Interval: Before each use or daily

1. Stop engine, wait for all moving parts to stop, and remove key. Engage parking brake.
2. Lift deck and secure in raised position as stated in section **Raising the Mower Deck to the Service Position**.
3. Inspect blades and sharpen or replace as required.
4. To remove blade, use a block of wood or locking pliers to hold blade in place and remove the 1/2-20 x 2 1/4 inch blade bolt that secures the blade and blade driver.
5. Re-install the blade driver (with new blades) by using a block of wood or locking pliers to hold

the blade in place and torque the blade bolts to 85-110 ft-lb (115-149 N-m).

Note: Blade driver flats must be aligned with the flats on the shaft when installing blade on the mower deck.

6. Lower the mower deck to the operation position (see section **Lowering the Mower Deck to the Operation Position**).

⚠ WARNING

Operating a mower deck with loose or weakened blade bolts can be dangerous. A loose or weakened blade bolt could allow a blade rotating at a high speed to come out from under the deck, causing serious injury or property damage.

- **Replace the blade bolt after striking a foreign object.**
- **Use only genuine Exmark replacement parts.**
- **Do Not lubricate the threads of the bolt or spindle before assembly.**
- **Torque the blade bolt to 85-110 ft-lb (115-149 N-m).**
- **Torque the shear bolts to 80-100 in-lb (922-1130 N-cm).**

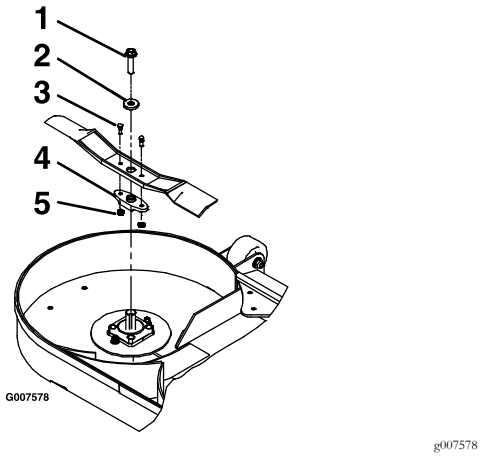

Figure 18

1. 1/2-20 x 2 1/4 blade bolt— torque to 85-110 ft-lb (115-149 N-m).
2. Washer
3. Shear bolts—torque to 80–100 in-lb (922-1130 N-cm)
4. Blade driver
5. 1/4-20 nyloc nuts

Check Safety Interlock System

Service Interval: Before each use or daily

Important: It is essential that operator safety mechanisms be connected and in proper operating condition prior to use.

Note: If machine does not pass any of these tests, **Do Not** operate. Contact an Authorized Service Dealer.

Note: To prevent engine cut-outs on rough terrain, the seat has a 1/2 second time delay before the engine begins to shutdown.

Check the Normal Engine Starting Chart

	System				
	Parking Brake	**PTO**	**Speed Control Lever**	**Operator**	**Outcome**
State of System	Engaged 	Disengaged (Blades) 	In Neutral **N**	In seat or out of the seat 	Starter should crank 

Check Engine Starting Circuit Chart

Note: In the **Check Engine Starting Circuit Chart**, the state of system item that is bold is being checked in each scenario.

	System				
	Parking Brake	**PTO (Blades)**	**Speed Control Lever**	**Operator**	**Outcome**
State of System	Engaged 	Disengaged 	**Not In Neutral** 	Operator in seat 	Starter must not crank 
	Disengaged 	Disengaged 	In Neutral **N**	Operator in seat 	Starter must not crank 
	Engaged 	**Engaged** 	In Neutral **N**	Operator in seat 	Starter must not crank 

Check Shutdown Circuit Chart

Note: In the **Check Engine Starting Circuit Chart**, the state of system item that is bold is being checked in each scenario.

	System					
	Engine	**Parking Brake**	**PTO (Blades)**	**Speed Control Lever**	**Operator**	**Outcome**
State of System	Running idle (1/3 throttle) 	**Disengaged** 	Disengaged 	**In Neutral** **N**	**Raise off of seat (but don't get off)** 	Engine must begin shutdown within 1 second 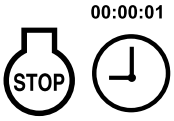
	Running idle (1/3 throttle) 	Disengaged 	**Engaged** 	In Neutral **N**	Raise off of seat (but don't get off) 	Engine must begin shutdown within 1 second 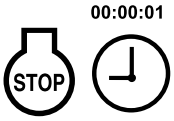

Check Stop Time of Moving Drive Components

Service Interval: Before each use or daily

1. Stop engine, wait for all moving parts to stop, and remove key. Engage parking brake.
2. Check that the hopper is down and the hopper door is securely closed.
3. Remove fuel tank mounting nuts and swing out fuel tank.
4. Sit on the seat, start the engine, and disengage the parking brake. Be sure all persons are clear of the mower deck and discharge area before engaging PTO.
5. With the throttle set to the "MIDWAY" position, pull the PTO lever upward and then place the throttle in the "FAST" position. Allow the machine to run for a few seconds before stopping the PTO and turning off the machine.
6. Look at the RH side of the machine to see if the belts and blower sheave have stopped. The components should stop in less than seven seconds.

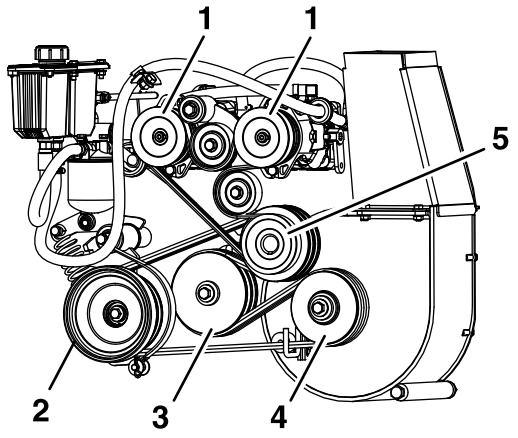

g324815

Figure 19

1. Pump sheave
2. Idler sheave
3. Jackshaft sheave
4. Engine sheave
5. Blower sheave

7. If there is movement of belts and blower sheave, check the following:
   - **Deck Drive:** Confirm all moving parts of the drive system have stopped; movement may not be audible.
   - **Belt Guides and Belts:** The belt guides may need to be adjusted or replaced; refer to **Belt Guide Adjustment** section or contact an Authorized Service Dealer. Check pump and PTO drive belts for wear, cracking, or contamination; replace if necessary.
   - **Brake Band:** Check for oil spilled or vented from an overfilled hydraulic reservoir. Replace the brake band if it becomes contaminated with oil.
   - **Pulleys:** Check the alignment of the pulleys. An adjustment or replacement may be necessary; refer to the **PTO Drive Pulley Alignment** and/or **Pump Drive Pulley Alignment** sections or contact an Authorized Service Dealer.

     Inspect the grooves for excessive wear. Place a sheave gauge or straight edge along the groove. If there is a 1/32 inch (.8 mm) gap or more, replace the sheave (see Figure 20).

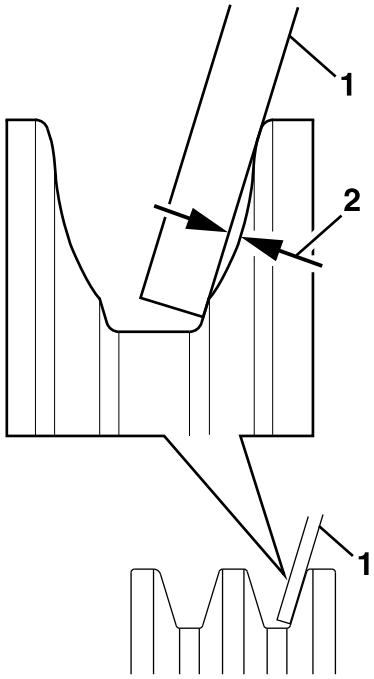

g324794

Figure 20

1. Sheave gauge or straight edge
2. 1/32 inch (.8 mm) gap or more

   - **Belt Ride:** Check for belt ride in the groove. The belt ride should be uniform in all grooves. The bottom of the groove should not show signs of belt contact. Worn sheaves will cause premature belt wear.

Check for Loose Hardware

Service Interval: Before each use or daily

1. Stop engine, wait for all moving parts to stop, and remove key. Engage parking brake.
2. Visually inspect machine for any loose hardware or any other possible problem. Tighten hardware or correct the problem before operating.

Service Air Cleaner

Service Interval: Every 50 hours—Service the air cleaner. (May need more often under severe conditions. See the Engine Owner's Manual for additional information.)

1. Stop engine, wait for all moving parts to stop, and remove key. Engage parking brake.
2. Tilt hopper up to gain access to the air cleaner.
3. Loosen retaining clips and remove air cleaner compartment cover.
4. Remove paper element. Check the condition of the paper element. Replace if dirty, bent or damaged.
5. Check the condition of the inner element. Replace whenever it appears dirty, typically every other time the paper element is replaced. Clean the base around the inner element before removing, so dirt does not get into the engine.
6. **Do Not** wash or use pressurized air to clean paper element or inner element.
7. Reinstall elements. Position the cover so that the rubber dust ejector is pointing downward and secure with retaining clips.

Change Engine Oil

Service Interval: After the first 5 hours

Every 100 hours (May need more often under severe conditions.)

1. Stop engine, wait for all moving parts to stop, and remove key. Engage parking brake.
2. Drain oil while engine is warm from operation.
3. Tilt hopper up to gain access to the engine area.
4. The oil drain valve is located on right hand side of engine at the back of the unit. Place pan under machine to catch oil. Remove plug from end of drain hose. Allow oil to drain and replace oil drain plug. Torque plug to 20-24 ft-lb.
5. Replace the oil filter every other oil change. Clean around oil filter and unscrew filter to remove. Before reinstalling new filter, apply a thin coating of Exmark 4–Cycle Premium Engine Oil on the surface of the rubber seal. Turn filter clockwise until rubber seal contacts the filter adapter then tighten filter an additional 1/2 to 3/4 turn.
6. Clean around oil fill cap and remove cap. Fill to specified capacity and replace cap.
7. Remove drain hose, close fuel tank, and lower hopper.
8. Use oil recommended in the **Check Engine Oil Level** section. **Do Not** overfill. Start the engine and check for leaks.
9. Wipe up any spilled oil from engine deck mounting surfaces.

Check Hydraulic Oil Level

Service Interval: Every 40 hours

⚠ WARNING

Oil spilled or vented from an overfilled hydraulic reservoir onto the PTO brake band will cause a longer stopping time for the deck and blower rotating components. The deck and blower rotating components can cause serious injury.

- **Wait for all moving parts to come to a complete stop before servicing.**
- **Do Not overfill the hydraulic reservoir. Carefully fill only to the recommended level.**
- **Replace the brake band if it becomes contaminated with oil.**

1. Stop engine and wait for all moving parts to stop. Engage parking brake.
2. Wait until the unit cools before checking the hydraulic oil.
3. Tilt hopper up.
4. Clean area around hydraulic reservoir cap and remove cap.

5. Wipe the dipstick clean and re-insert the cap back into the hydro. Lightly tighten the cap.
6. Remove the cap again and check the level of the oil on the dipstick. See Figure 21 for oil levels.

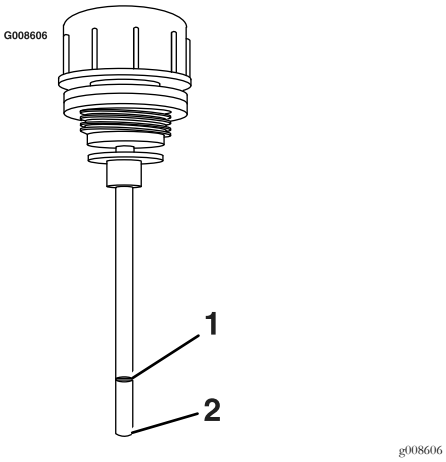

Figure 21

1. Full
2. Add

Note: The oil level on the dipstick will be incorrect if the oil is checked when the unit is hot.

7. If the dipstick oil level does not register on the dipstick, add Exmark Premium Hydro Oil. **Do Not overfill.**
8. Replace hydraulic reservoir cap and tighten until snug. **Do Not overtighten.**

Check Tire Pressures

Service Interval: Every 40 hours

1. Stop engine, wait for all moving parts to stop, and remove key. Engage parking brake.
2. Check tire pressure in drive tires.
3. Inflate drive tires to 15 psi (103 kPa).
4. The rear caster tire is semi-pneumatic and does not need to be inflated.

Note: Do Not add any type of tire liner or foam fill material to the tires. Excessive loads created by foam filled tires may cause failures to the hydro drive system, frame, and other components. Foam filling tires will void the warranty.

Check Condition Of Belts

Service Interval: Every 40 hours

1. Stop engine, wait for all moving parts to stop, and remove key. Engage parking brake.
2. Tilt hopper up and check pump and PTO drive belts for wear, cracking, or contamination.
3. Belts are spring tensioned and no adjustment is necessary unless belts are replaced. See **PTO Belt Replacement** and **Pump Drive Belt Replacement** sections for belt replacement.

Change Gearbox Oil

Service Interval: After the first 50 hours

Every 2,000 hours thereafter

1. Stop engine, wait for all moving parts to stop, and remove key. Engage parking brake.
2. Place unit on a level surface.
3. Remove the gearbox and drive shaft assembly from the mower deck. Retain hardware for re-use.
4. Remove the large oil drain plug on the front of each of the three gearbox sections and drain oil (Figure 22).

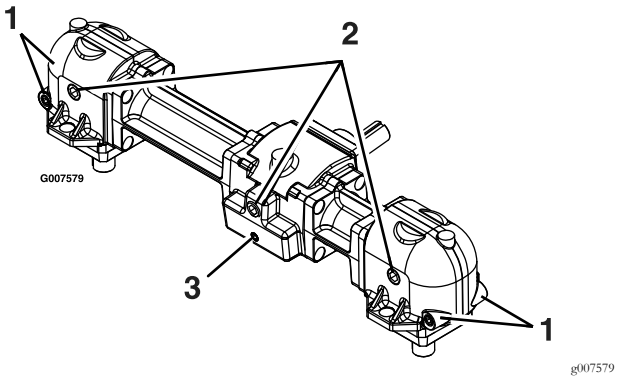

Figure 22

1. Small magnetic plugs (front and back)
2. Large oil drain/fill plug
3. Small magnetic plug (front only)

5. Remove small magnetic plugs and wipe away any material accumulated on the plugs.
6. Apply a Teflon pipe sealant to all small magnetic plugs and re-install into the gearbox.
7. Re-install the gearbox and drive shaft assembly to the mower deck.
8. Fill gearbox with Mobil SHC (synthetic) 75W-90 gear lube oil until level with oil drain/fill plug. Each of the gearbox sections must be filled separately.

Note: Mower deck should remain level to the ground when filling gearbox with oil. Do Not fill gearbox with deck raised in the service position.

9. Apply a Teflon pipe sealant to the 3 large oil plugs and re-install into the gearbox.

Check Gearbox Oil

Service Interval: Every 100 hours

1. Stop engine, wait for all moving parts to stop, and remove key. Engage parking brake.
2. Place unit on a level surface.
3. Add oil as needed until level with oil drain plug; see **Change Gearbox Oil** section.

Lubricate Grease Fittings

Note: See chart for service intervals.

1. Stop engine, wait for all moving parts to stop, and remove key. Engage parking brake.
2. Lubricate fittings with one to two pumps of NLGI grade #2 multi-purpose gun grease.

   Refer to the Lubrication Chart for fitting locations and lubrication schedule.

Lubrication Chart

Fitting Locations	Initial Pumps	Number of Places	Service Interval
1. Caster Pivot	*0	3	*Yearly
2. PTO Idler	1	1	Yearly
3. Pump Idler	1	1	Yearly
4. Rear Caster Hub	*0	1	*Yearly
5. Drive Shaft	1	3	40 Hours
6. Front Caster Wheel Hub	1	2	8 Hours
7. Deck Flip-Up	1	4	100 Hours

Lubrication Chart (cont'd.)

Fitting Locations	Initial Pumps	Number of Places	Service Interval
8. Push Arm Tubes	1	2	100 Hours
9. Front Caster Pivots	*0	2	*Yearly

* See step 3 for special lubrication instructions on the front and rear caster pivots and the **Lubricate Rear Caster Wheel Hubs** section for special lubrication instructions on the rear caster wheel hubs.

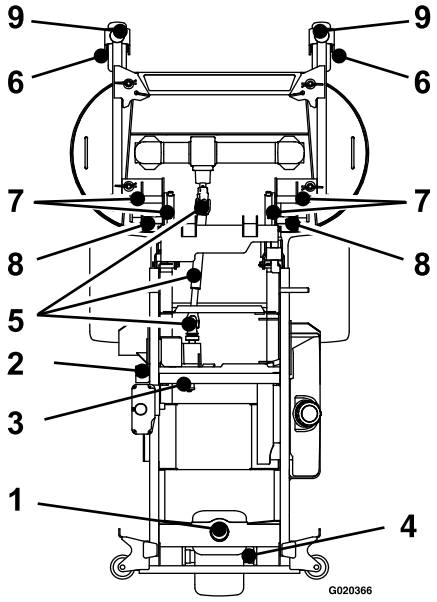

Deck shown for reference only. See attachment manual for lubrication schedule.

3. Lubricate caster pivots once a year. Remove hex plug and cap. Thread grease zerk in hole and pump with grease until it oozes out around top bearing. Remove grease zerk and thread plug back in. Place cap back on.

Lubricate Rear Caster Wheel Hubs

Service Interval: Yearly

1. Stop engine, wait for all moving parts to stop, and remove key. Engage parking brake.

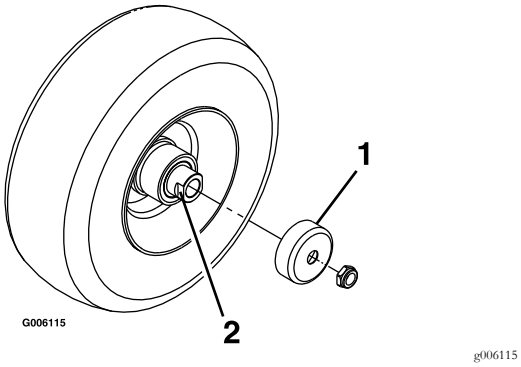

Figure 23

1. Seal guard
2. Spacer nut with wrench flats

2. Remove caster wheel from caster forks.
3. Remove seal guards from the wheel hub.
4. Remove one of the spacer nuts from the axle assembly in the caster wheel. Note that thread locking adhesive has been applied to lock the spacer nuts to the axle. Remove the axle (with the other spacer nut still assembled to it) from the wheel assembly.
5. Pry out seals, and inspect bearings for wear or damage and replace if necessary.
6. Pack the bearings with a NLGI grade #1 multi-purpose grease.
7. Insert one bearing, one new seal into the wheel.

   Note: Seals (Exmark PN 103-0063) must be replaced.
8. If the axle assembly has had both spacer nuts removed (or broken loose), apply a thread locking adhesive to one spacer nut and thread onto the axle with the wrench flats facing outward. Do Not thread spacer nut all of the way onto the end of the axle. Leave approximately 1/8 inch (3 mm) from the outer surface of the spacer nut to the end of the axle inside the nut.
9. Insert the assembled nut and axle into the wheel on the side of the wheel with the new seal and bearing.
10. With the open end of the wheel facing up, fill the area inside the wheel around the axle full of NLGI grade #1 multi-purpose grease.
11. Insert the second bearing and new seal into the wheel.
12. Apply a thread locking adhesive to the 2nd spacer nut and thread onto the axle with the wrench flats facing outward.
13. Torque the nut to 75-80 in-lb (8-9 N-m), loosen, then re-torque to 20-25 in-lb (2-3 N-m). Make sure axle does not extend beyond either nut.
14. Reinstall the seal guards over the wheel hub and insert wheel into caster fork. Reinstall caster bolt and tighten nut fully.

Important: To prevent seal and bearing damage, check the bearing adjustment often. Spin the caster tire. The tire should not spin freely (more than 1 or 2 revolutions) or have any side play. If the wheel spins freely, adjust torque on spacer nut until there is a slight amount of drag. Reapply thread locking adhesive.

Lubricate Brake Handle Pivot

Service Interval: Every 160 hours

1. Stop engine, wait for all moving parts to stop, and remove key. Engage parking brake.
2. Lubricate bronze bushings on brake handle pivot with a spray type lubricant or light oil (see Figure 24).

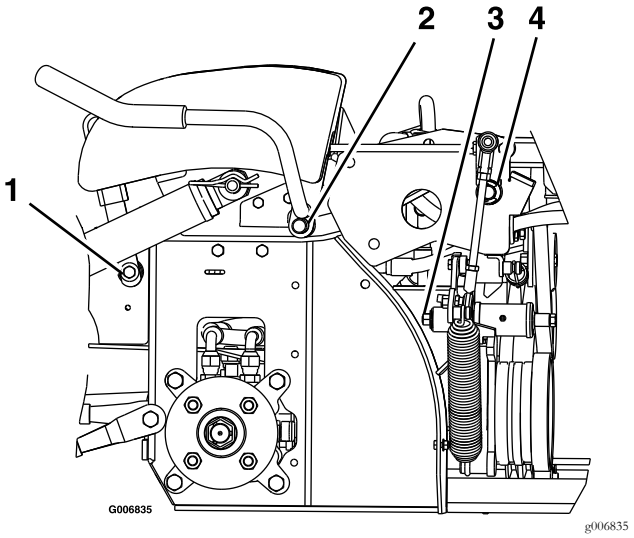

Figure 24
Left Side of Unit Shown

1. Brake Handle Pivot
2. PTO Handle Pivot
3. Spring Arm Pivot
4. Toggle Pivot

Lubricate Brake Rod Bushings

Service Interval: Every 160 hours

1. Stop engine, wait for all moving parts to stop, and remove key. Engage parking brake.
2. Unhook seat latch and tilt seat up.
3. Lubricate bronze bushings on each end of brake rod shaft with a spray type lubricant or a light oil (bushings are located to the inside of the flange bearings).

Lubricate Steering Linkage Rod Ends

Service Interval: Every 160 hours

1. Stop engine, wait for all moving parts to stop, and remove key. Engage parking brake.
2. Unhook seat latch and tilt seat up.
3. Lubricate each end of both steering linkage rods with a spray lubricant or a light oil.

Lubricate Hopper Switch Actuator

Service Interval: Every 160 hours

1. Stop engine, wait for all moving parts to stop, and remove key. Engage parking brake.
2. Raise hopper and locate actuator on right hand side of mainframe.
3. Lubricate switch actuator rod with a spray lubricant or a light oil.

Check Spark Plugs

Service Interval: Every 160 hours

Remove spark plugs, check condition and reset gaps, or replace with new plugs. See Engine Owner's Manual.

Change Fuel Filter

Service Interval: As required

A fuel filter is installed between the fuel tank and the engine. Replace when necessary.

Replacement Filter: Kohler P/N 24 050 13-S

Change Hydraulic System Filter and Fluid

Service Interval: After the first 100 hours

Every 500 hours/Yearly (whichever comes first) thereafter (Every 250 hours/Yearly if using Mobil 1 15W50)

Note: Use only Exmark Part No. 109-4180 for Summer use above 32°F (0°C) or P/N 1-523541 for Winter use below 32°F (0°C). (Refer to the **Hydrostatic Ground Drive System** section in Specifications for filter specifications.)

1. Stop engine, wait for all moving parts to stop, and remove key. Engage parking brake.
2. Carefully clean area around filter. It is important that no dirt or contamination enter hydraulic system.
3. Unscrew filter to remove and allow oil to drain from reservoir.

   Important: Before reinstalling new filter, fill it with Exmark Premium Hydro oil and apply a thin coat of oil on the surface of the rubber seal.

   Turn filter clockwise until rubber seal contacts the filter adapter, then tighten the filter an additional 2/3 to 3/4 turn.
4. Fill reservoir as stated in **Check Hydraulic Oil Level** section.

   Exmark Premium Hydro Oil is recommended. Refer to the chart for an acceptable alternative:

Hydro Oil	Change Interval
Exmark Premium Hydro Oil (Preferred)	After first 100 hours *Every 500 hours/yearly thereafter
Mobil 1 15W50	After first 100 hours *Every 250 hours/yearly thereafter

   *May need more often under severe conditions.
5. Raise the rear of machine up and support with jack stands (or equivalent support) just high enough to allow drive wheels to turn freely.
6. Start engine and move throttle control ahead to full throttle position. Move the speed control levers to the full speed and run for several minutes. Shut down machine and recheck oil level.

Note: Do Not change hydraulic system oil (except for what can be drained when changing filter), unless

it is felt the oil has been contaminated or been extremely hot.

Changing oil unnecessarily could damage hydraulic system by introducing contaminates into the system.

Check Wheel Hub Locknuts

Service Interval: After the first 100 hours
Every 500 hours thereafter

Torque to 275–350 ft-lb (373–475 N-m).

Check Wheel Lug Nuts

Service Interval: After the first 100 hours
Every 500 hours thereafter

Torque to 85-105 ft-lb (122-129 N-m) cross pattern.

Fuel Tank — Mounting Hardware Specifications

Service Interval: As required

When installing the nuts on the fuel tank studs, fully tighten the nyloc nut and back off 1/2 turn. This allows for normal fuel tank expansion and contraction with changes in temperature and fuel levels.

Thread Locking Adhesives

Thread locking adhesives such as "Loctite 242" or "Fel-Pro, Pro-Lock Nut Type" are used on the following fasteners:

- Pump drive sheave set screws.
- Square head setscrews on Hydro pump control arms.
- Sheave retaining bolt in the end of engine crankshaft, blower shaft and jackshaft.
- Caster wheel spacer nuts.
- Fuel tank bulkhead fitting nuts.

Adhesives such as "Loctite RC/609 or RC/680" or "Fel-Pro Pro-Lock Retaining I or Retaining II" are used on the following:

Fuel tank studs, where studs are inserted into tank.

Dielectric Grease

Dielectric grease is used on all blade type electrical connections to prevent corrosion and loss of contact.

Dielectric grease should not be applied to sealed connectors.

Adjustments

Note: Disengage PTO, shut off engine, wait for all moving parts to stop, engage parking brake, and remove key before servicing, cleaning, or making any adjustments to the machine.

Deck Leveling

1. Position mower on a flat surface.
2. Stop engine, wait for all moving parts to stop, and remove key. Engage parking brake.
3. Inflate drive tires to 15 psi (103 kPa).
4. Verify all hairpins are in the 3 inch deck height holes with the spacers under the hair pins (Figure 25).

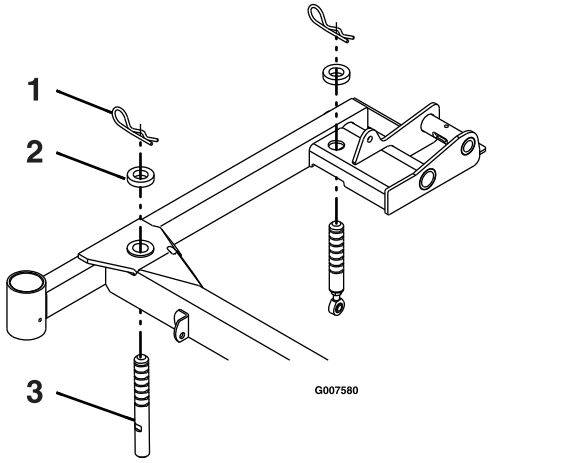

Figure 25
Right Hand Side Shown

1. Hairpin
2. Spacer
3. Deck support pin

5. Shorten/lengthen each deck support pin to obtain blade tip height of 3 inches at the front of the deck and 3 1/4 inches at the rear of the deck.

PTO Drive Belt Tension

Self-tensioning - No adjustment necessary.

Pump Drive Belt Tension

Self-tensioning - No adjustment necessary.

PTO Belt Replacement

1. Stop engine, wait for all moving parts to stop, and remove key. Engage parking brake.
2. With engine "off", engage PTO lever, then remove the hairpin and clevis pin at the bottom of the PTO brake band.
3. Rotate the brake band upwards out of the way of the belts keeping clear of the belt drive.
4. Disengage PTO lever.
5. Loosen belt guides "A" and "B" (See Figure 26).
6. Remove current belts
7. Route new belts onto sheaves as shown in the decal located on the back of the left drive shield (see Figure 26).

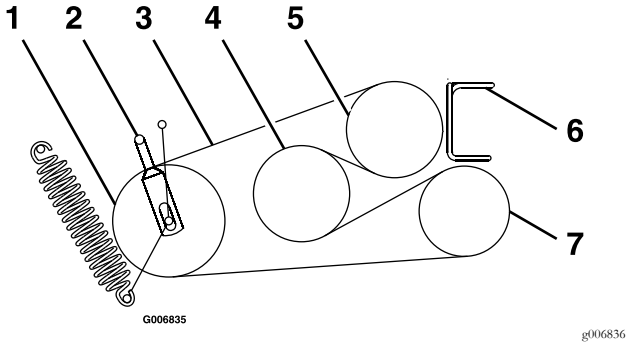

Figure 26

1. Idler
2. Belt Guide "B"
3. PTO Belt
4. Jackshaft
5. Engine
6. Belt Guide "A"
7. Blower

8. Engage the PTO lever
9. Rotate brake band back down into original position
10. Re-install clevis pin and hairpin to secure brake band.
11. Engage the PTO lever.
12. Loosen the jam nuts and adjust linkage until the top of the idler arm is aligned with the bottom of notch on tension arm as shown in Figure 27.

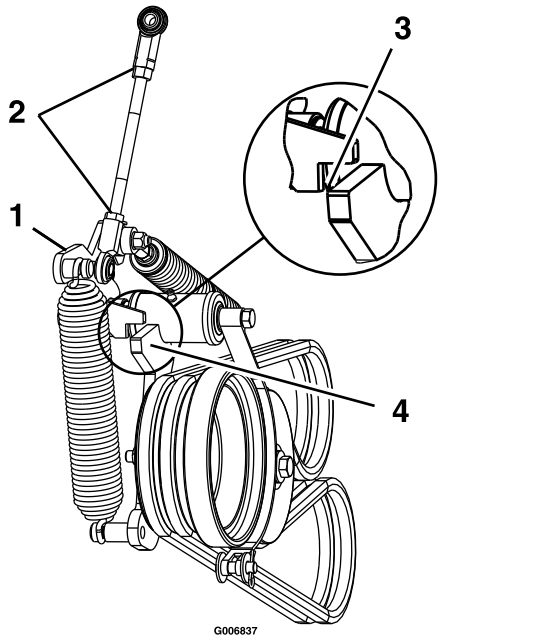

Figure 27

1. Tension Arm
2. Loosen jam nuts
3. When PTO is engaged, align top of idler arm with bottom of notch on tension arm, as shown.
4. Idler Arm

13. Tighten jam nuts and disengage PTO lever. Re-engage PTO lever and check alignment.
14. Check and adjust belt guides as stated in **Belt Guide Adjustment** section.

Pump Drive Belt Replacement

1. Stop engine, wait for all moving parts to stop, and remove key. Engage parking brake.
2. Remove PTO Belts. See **PTO Belt Replacement** section for removal instructions.
3. Pull spring idler or remove spring to relieve pump drive belt tension. Remove old belt.
4. Route new belt onto sheaves as shown in the decal located on the back of the left drive shield (see Figure 28).

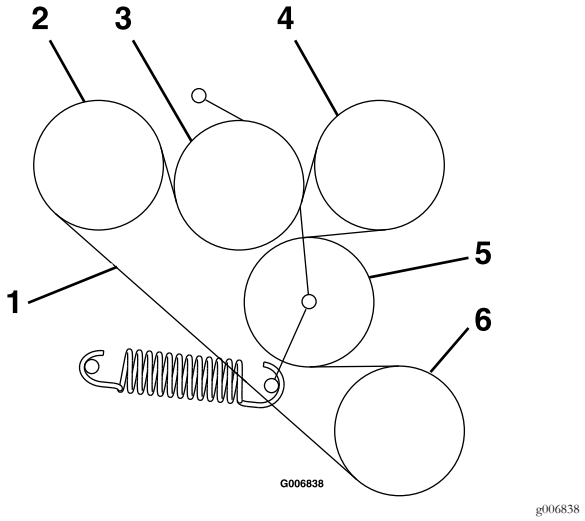

Figure 28

1. Pump Drive Belt
2. Pump
3. Idler
4. Pump
5. Idler
6. Engine

5. Reinstall PTO Belts as stated in the **PTO Belt Replacement** section

Belt Guide Adjustment

1. Stop engine, wait for all moving parts to stop, and remove key. Engage parking brake.
2. Engage PTO lever.
3. Adjust belt guides as shown in Figure 29.

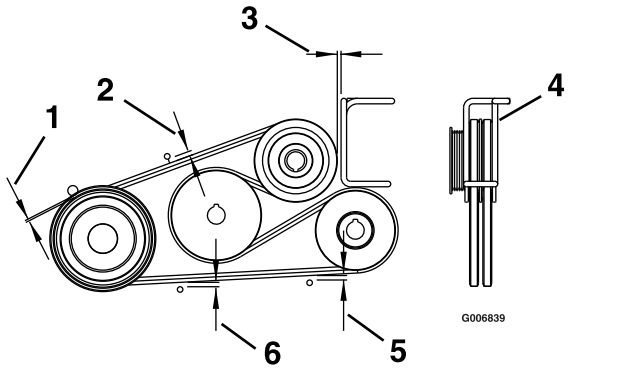

Figure 29

1. 1/8 inch (3 mm)
2. 7/16 inch (11 mm)
3. 1/8 inch (3 mm) Clearance
4. Rotate wireform guide to center belts in guide.
5. 1/4 inch (6 mm)
6. 5/16 inch (8 mm)

Adjust Safety Switch

Adjust all safety switches so plunger extends 3/16 inch to 1/4 inch (4.8 mm-6.4 mm) from switch body when plunger is compressed (see Figure 30).

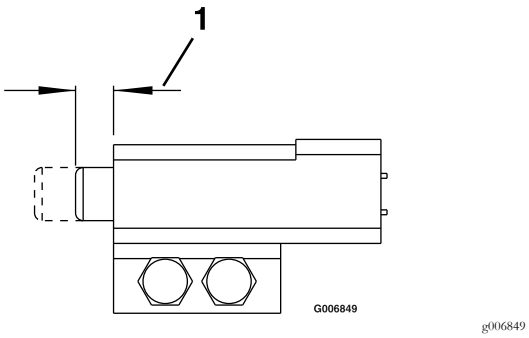

Figure 30

1. 3/16 inch to 1/4 inch (4.8 mm-6.4 mm)

Parking Brake Adjustment

Check to make sure each brake is adjusted properly.

1. Stop engine, wait for all moving parts to stop, and remove key.
2. Release the parking brake.
3. Unhook the seat latch and tip the seat forward.
4. There should be no slack between the park brake handle and the linkage .If an adjustment is necessary, remove the clevis pin and rotate the linkage counterclockwise to lengthen or clockwise to shorten.

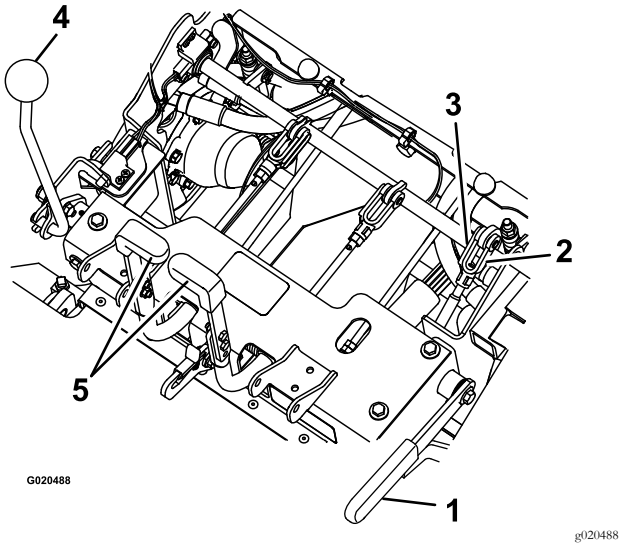

Figure 31

1. Parking brake
2. Rotate yoke
3. Clevis pin
4. Speed control lever
5. Steering levers

5. Measure the compressed spring length on both vertical spring assemblies. The spring should measure between 2.35-2.85 inches (6-7 cm). If necessary, adjust the nut at the top of the vertical spring assembly to achieve this distance.

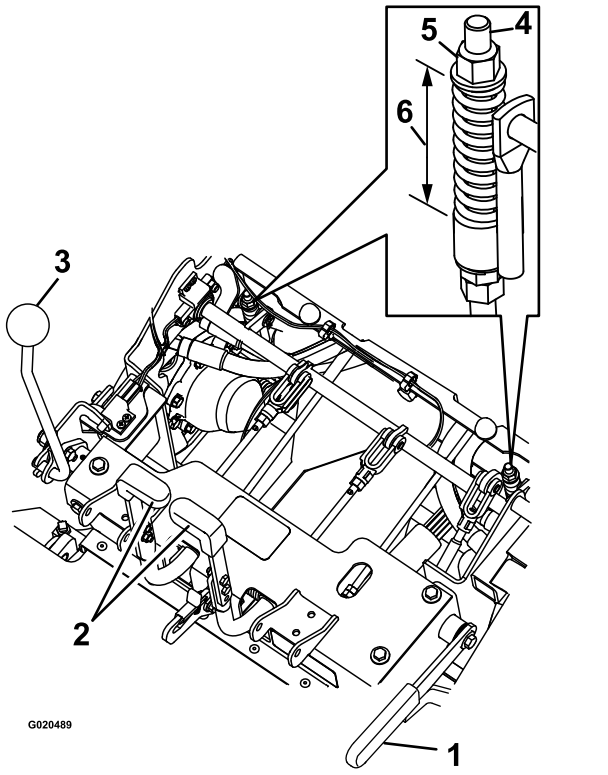

Figure 32

1. Parking brake
2. Steering lever
3. Speed control lever
4. Vertical spring assembly
5. Nut
6. 2.35-2.85 inches (6-7 cm)

6. The linkage length is adjusted with two nuts at the bottom of the vertical spring assembly. The linkage should measure 8.92–9.16 inches (22.7–23.3 cm).

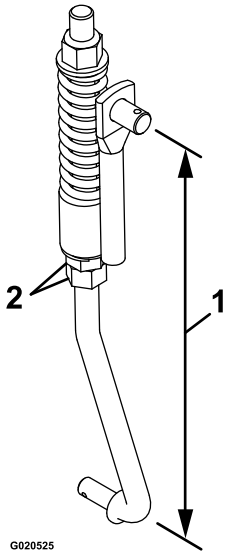

Figure 33

1. 8.92–9.16 inches (22.7–23.3 cm)
2. Nuts

7. Engage and disengage the brakes to check for proper engagement and disengagement. Readjust if necessary. When the brakes are disengaged, there should be little to no free play in the brake linkage with no dragging in the brakes.

Reverse Stop Rod Adjustment

1. Stop engine, wait for all moving parts to stop, and remove key.
2. Engage the parking brake and check the movement of the steering levers:
   - If the levers move slightly forward (up to 1/8 inch (3 mm) then no adjustment is necessary.
   - If the levers do not move, then proceed with the following steps:
     A. Flip up the seat or remove the seat frame assembly (with the seat attached) to obtain a clear view of the steering control shaft to complete this adjustment.
     B. Place the speed control lever in the neutral position.
     C. Release the park brake.
     D. Slightly adjust the length of the rod by loosening the jam nut and by rotating the rod.

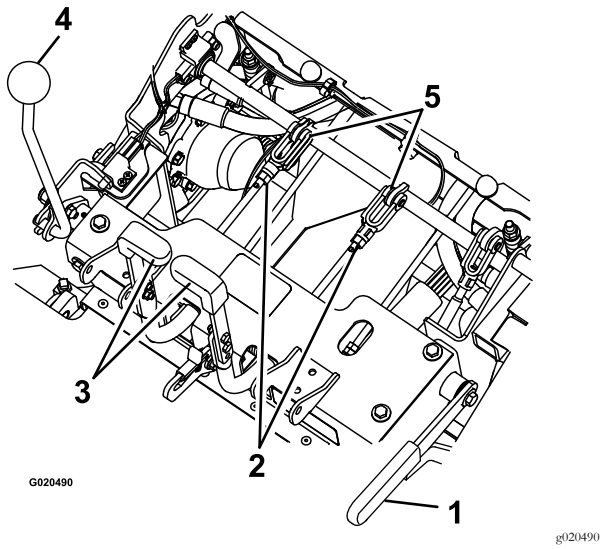

Figure 34

1. Parking brake
2. Nut
3. Steering lever
4. Speed control lever
5. Clevis pin and stop rod

E. Engage the parking brake and check the steering levers.

Repeat steps C through E until up to 1/8 inch (3 mm) movement is achieved.

F. Reinstall the seat frame assembly, if removed in step A.

Adjust Speed Control Lever Tension

1. Stop engine, wait for all moving parts to stop, and remove key. Engage parking brake.
2. Tension in speed control lever can be adjusted by adjusting the tightness of the lever pivot nut which is located at the end of the motion control shaft in front of the RH console (see Figure 35).

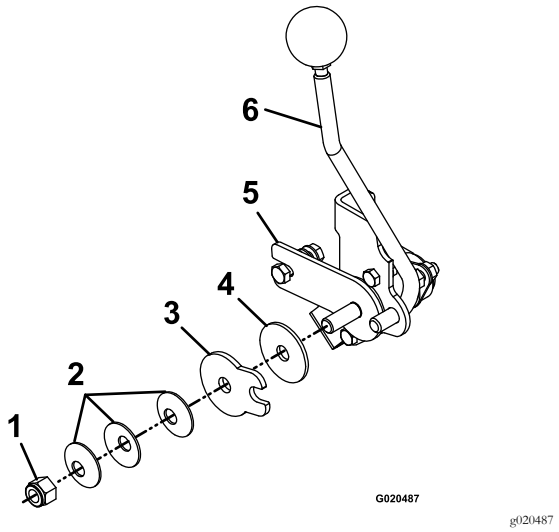

Figure 35

1. Nut
2. Spring disc washers
3. Speed control friction plate
4. Friction disc
5. Speed control friction bracket
6. Speed control lever

3. Set the tension high enough that the speed control lever position is maintained during operation and loose enough to be moved comfortably by the operator.

Motion Control Linkage Adjustment

Set neutral:

1. Remove the electrical connection from the seat safety switch, located directly in front of the seat switch assembly.
2. The neutral adjustment must be made with the drive wheels turning. Raise the frame and place on jack stands so that drive wheels can rotate freely. Temporarily install a jumper wire across the terminals in the connector of the wiring harness.
3. Start the engine.
4. Run the unit at least 5 minutes with the speed control lever at full forward speed to bring hydraulic system oil up to operating temperature. Return speed control lever to neutral (full rear) position.
5. To obtain the neutral position, adjust the left and right pump control rod linkages that connect the steering control to the pump control arms until the wheels stop, or creep slightly in reverse.

6. Adjust the left pump linkage by rotating the tracking adjustment knob.
7. Adjust the right pump linkage by using a wrench to turn the double nuts on the assembly (see Figure 36)

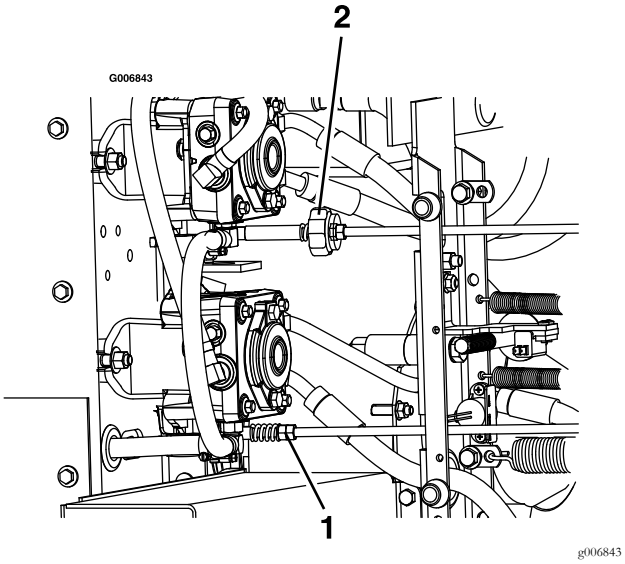

Figure 36

1. Rotate tracking knob on left side
2. Rotate double nuts on right side

8. Move the steering levers to the reverse position. While applying slight pressure to the levers, allow the steering levers to return to neutral. The wheels must stop turning (or slightly creep in reverse).
9. Stop engine and wait for all moving parts to stop. Remove jumper wire from wire harness connector and plug connector into seat switch.
10. Lower from jackstands.

Tracking Adjustment

See **Motion Control Linkage Adjustment** section

PTO Drive Pulley Alignment

PTO drive pulley alignment is necessary for any of the following conditions:

- The blower has been removed or replaced.
- The engine mounting bolts have been loosened or the engine has been moved or replaced.
- The jackshaft mounting bolts have been loosened or the jackshaft has been moved or replaced.

1. Stop engine, wait for all moving parts to stop, and remove key. Engage parking brake.
2. Move the speed control lever to the neutral position.
3. Disengage the PTO lever.
4. Remove fuel tank mounting nuts and swing out fuel tank.
5. Verify that the blower is installed and secured tightly.
6. Loosen the four engine mounting bolts.
7. Unhook the pump belt tension spring.
8. Loosen the four jackshaft mounting bolts.
9. Measuring from the blower pulley as a baseline, move the engine and jackshaft until the rear surface of all three pulleys are aligned within 1/32 inch to 1/16 inch (0.8-1.6 mm). Use a straight edge to align all three surfaces (see Figure 37).

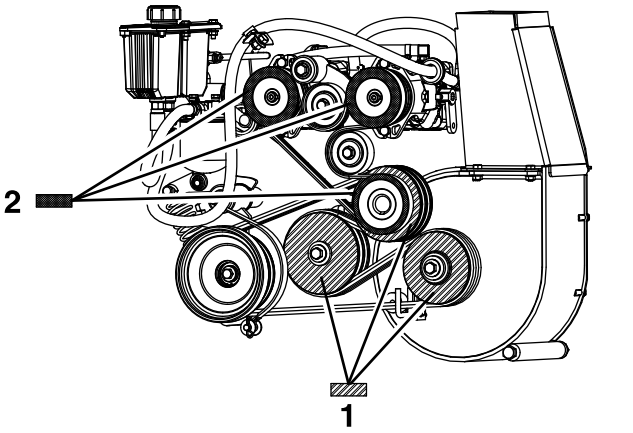

Figure 37

1. Align three pump drive pulley surfaces shown with this pattern within 1/32 inch to 1/16 inch (0.8-1.6 mm).
2. Align three PTO drive pulley surfaces shown with this pattern within 1/32 inch to 1/16 inch (0.8-1.6 mm).

10. Tighten the four engine mounting bolts and four jackshaft mounting bolts. Check alignment after tightening.
11. Re-install pump belt tension spring.
12. Swing fuel tank in and re-install tank mounting nuts.
13. Complete the **Pump Drive Pulley Alignment** section.

Pump Drive Pulley Alignment

Pump drive pulley alignment is necessary for any of the following conditions:

- The engine mounting bolts have been loosened or the engine has been moved or replaced.
- The pump pulleys have been loosened, moved, or replaced.
- The PTO pulley alignment has been performed (see **PTO Drive Pulley Alignment** section).

1. Stop engine, wait for all moving parts to stop, and remove key. Engage parking brake.
2. Loosen set screws on both pump pulleys.
3. Using a straight edge, align each pump pulley with the engine pulley by sliding along the pump shaft (see Figure 37).
4. Re-tighten pulley set screws and recheck alignment.

Caster Pivot Bearings Pre-Load Adjustment

Remove dust cap from caster and tighten nyloc nut until washers are flat. Back off 1/4 of a turn to properly set the pre-load on the bearings. If disassembled, make sure the spring disc washers are reinstalled as shown in Figure 38 and Figure 39.

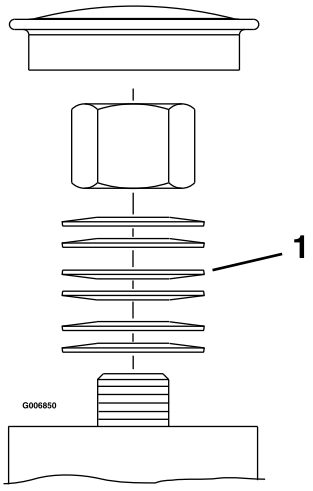

Figure 38
Rear Caster

1. Spring disc washers

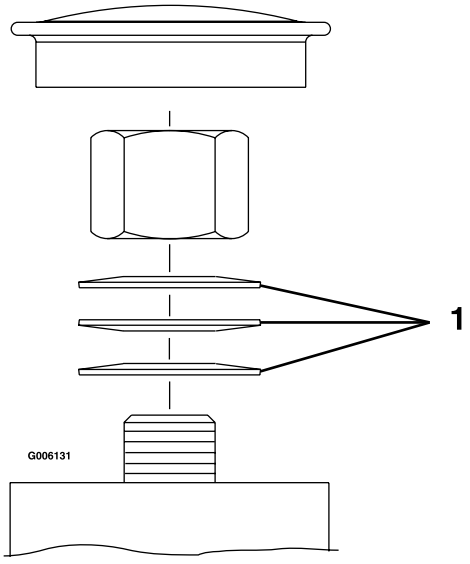

Figure 39
Front Caster

Hopper Door Adjustment

Door Closing:

Loosen six door hinge nuts (see Figure 40).

Open door and place a 3/8 inch rubber strip or 3/8 inch diameter hose between the hopper and hopper door (see Figure 40).

Close door and push tight against hopper.

Tighten hinge hardware. Open hopper door and remove rubber strip.

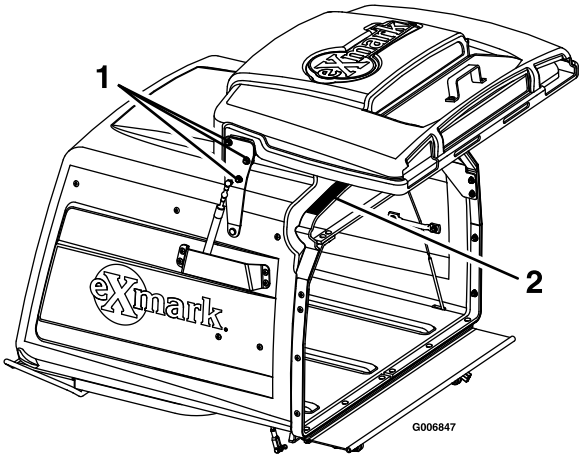

Figure 40

1. Loosen door hinge nuts-three per side
2. Place a piece of 3/8 inch (9.5 mm) rubber on this surface

PTO Brake Spring Adjustment

PTO brake spring adjustment is only necessary if the blower has been removed or replaced or if the PTO drive idler arm has been disassembled.

1. Stop engine, wait for all moving parts to stop, and remove key. Engage parking brake.
2. Locate the brake spring and thread the two jam nuts out to the end of the brake spring rod (see Figure 41).
3. Tighten jam nuts together at end of brake spring rod.

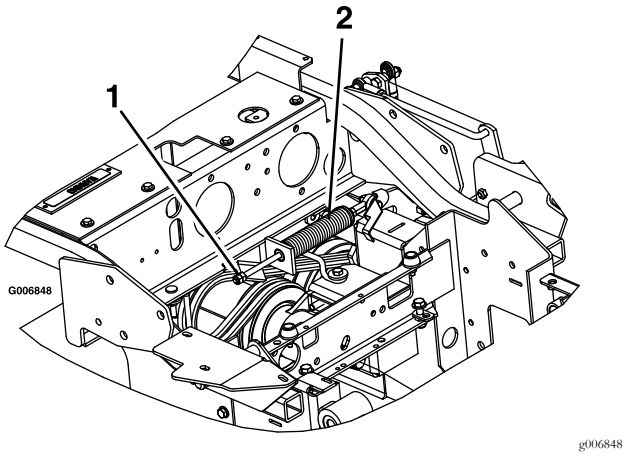

Figure 41

1. Tighten jam nuts here
2. PTO Brake spring assembly

Deck Locking Pin Stop Adjustment

1. Slide deck locking pins in on both sides and rotate to lock the deck in the “operation” position.
2. Loosen the jam nut and turn the stop screw clockwise until the locking pins is tight and cannot be rotated by hand (Figure 42).

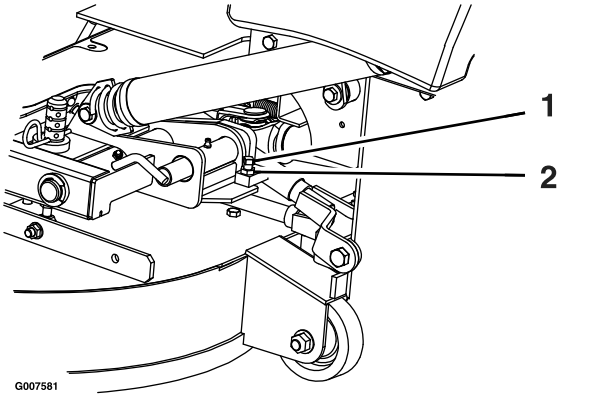

Figure 42

1. Rotate stop screw clockwise until locking pin is tight, then back off 1/2 turn.
2. Loosen jam nut

3. Loosen the stop screw counter clockwise 1/2 turn and tighten the jam nut
4. Test the locking pin to make sure it slides freely. Readjust if necessary.

Cleaning

Cleaning and Storing Safety

- Park machine on level ground, disengage drives, set parking brake, stop engine, and remove key. Wait for all moving parts to stop before leaving the operator's position. Allow the machine to cool before servicing, adjusting, fueling, cleaning, or storing.
- Clean grass and debris from the cutting unit, muffler, drives, grass catcher, and engine compartment to prevent fires.
- Allow the machine to cool before storing the machine in any enclosure. Do Not store the machine or fuel container, or refuel, where there is an open flame, spark, or pilot light such as on a water heater or other appliance.

Clean Engine and Exhaust System Area

Service Interval: Before each use or daily (May be required more often in dry or dirty conditions.)

⚠ CAUTION

Excessive debris around the engine cooling air intake and inside of the pump drive belt compartment and damaged or missing rubber baffles can cause the engine and hydraulic system to overheat which can create a fire hazard.

Clean all debris from inside of pump drive belt compartment daily.

1. Stop engine, wait for all moving parts to stop, and remove key. Engage parking brake.
2. Clean all debris from rotating engine air intake screen and from around engine shrouding and exhaust system area.
3. Clean all debris from around engine, drive belts, and exhaust system area.

Remove Engine Shrouds and Clean Cooling Fins

Service Interval: Every 80 hours

1. Stop engine, wait for all moving parts to stop, and remove key. Engage parking brake.
2. Remove cooling shroud clean-out covers from engine and clean cooling fins. Also clean dust, dirt, and oil from external surfaces of engine, which can cause improper cooling.
3. Make sure cooling shroud clean-out covers are reinstalled. Operating the engine without cooling shroud clean-out covers will cause engine damage due to overheating.
4. For Kohler EFI units: Swing out the fuel tank and remove debris from around the oil cooler positioned at right front corner of engine.

Important: Do Not use water to clean engine. Use low pressure compressed air. See Engine Owner's Manual.

Clean Debris From Machine

Service Interval: Before each use or daily

1. Stop engine, wait for all moving parts to stop, and remove key. Engage parking brake.
2. Clean off any oil, debris, or grass build-up on the machine, especially around the fuel tank, around engine and exhaust area.

Important: You can wash the machine with mild detergent and water. Do not pressure wash the machine. Avoid excessive use of water, especially near the control panel, under the seat, around the engine, hydraulic pumps, and motors.

Clean Debris From Cutting Deck

Service Interval: Before each use or daily

1. Stop engine, wait for all moving parts to stop, and remove key. Engage parking brake.
2. Clean off any oil, debris, or grass build-up on the cutting deck, especially under deck belt shields.

Clean Grass Build-Up Under Deck

Service Interval: Before each use or daily

1. Stop engine, wait for all moving parts to stop, and remove key. Engage parking brake.
2. Raise mower deck and secure in latched position (see **Raising the Mower Deck to the Service Position** section in Operation).
3. Clean out any grass build-up from underside of deck and in discharge chute.
4. Lower deck to cutting position and lock deck locking pins (see **Lowering the Mower Deck to the Operation Position** section in Operation.

Waste Disposal

Motor Oil Disposal

Engine oil and hydraulic oil are both pollutants to the environment. Dispose of used oil at a certified recycling center or according to your state and local regulations.

Battery Disposal

⚠ DANGER

Battery electrolyte contains sulfuric acid, which is poisonous and can cause severe burns. Swallowing electrolyte can be fatal or if it touches skin can cause severe burns.

- **Wear safety glasses to shield eyes, and rubber gloves to protect skin and clothing when handling electrolyte.**
- **Do Not swallow electrolyte.**
- **In the event of an accident, flush with water and call a doctor immediately.**

Federal law states that batteries should not be placed in the garbage. Management and disposal practices must be within relevant federal, state, or local laws.

If a battery is being replaced or if the unit containing the battery is no longer operating and is being scrapped, take the battery to a local certified recycling center. If no local recycling is available return the battery to any certified battery reseller.

Troubleshooting

Important: It is essential that all operator safety mechanisms be connected and in proper operating condition prior to mower use.

When a problem occurs, do not overlook the simple causes. For example: starting problems could be caused by an empty fuel tank.

The following table lists some of the common causes of trouble. Do Not attempt to service or replace major items or any items that call for special timing or adjustments procedures (such as valves, governor, etc.). Have this work done by your **Engine Service Dealer**.

Note: When disconnecting electrical connectors Do Not pull on the wires to separate the connectors.

Problem	Possible Cause	Corrective Action
Starter does not crank.	1. PTO is engaged.	1. Disengage the PTO.
	2. Parking brake is not set.	2. Set the parking brake.
	3. Speed control lever is not in neutral position.	3. Ensure the speed control lever is in the neutral position.
	4. Battery does not have a full charge.	4. Charge the battery. See **Check Battery Charge** and **Recommended Jump Starting Procedure** sections in Maintenance.
	5. Electrical connections are corroded, loose or faulty.	5. Check the electrical connections for good contact. Clean connector terminals thoroughly with electrical contact cleaner, apply dielectric grease and reconnect.
	6. Fuse is blown.	6. Replace the blown fuse.
	7. Relay or switch is defective.	7. Contact an Authorized Service Dealer.
Engine will not start, starts hard, or fails to keep running.	1. Fuel tank is empty.	1. Fill the fuel tank.
	2. Oil level in the crankcase is low.	2. Add oil to the crankcase.
	3. The throttle and choke are not in the correct position.	3. Be sure the throttle control is midway between the "SLOW" and "FAST" positions, and the choke is in the "ON" position for a cold engine (except Kohler EFI) or the "OFF" position for a warm engine.
	4. Dirt in fuel filter.	4. Replace the fuel filter.
	5. Dirt, water, or stale fuel is in the fuel system.	5. Contact an Authorized Service Dealer.
	6. Air cleaner is dirty.	6. Clean or replace the air cleaner element.
	7. Electrical connections are corroded, loose or faulty.	7. Check the electrical connections for good contact. Clean connector terminals thoroughly with electrical contact cleaner, apply dielectric grease and reconnect.
	8. Relay or switch is defective.	8. Contact an Authorized Service Dealer.
	9. Faulty spark plug.	9. Clean, adjust or replace spark plug.
	10. Spark plug wire is not connected.	10. Check the spark plug wire connection.
Engine loses power.	1. Engine load is excessive.	1. Reduce the ground speed.
	2. Air cleaner is dirty.	2. Clean or replace the air cleaner element.
	3. Oil level in the crankcase is low.	3. Add oil to the crankcase.
	4. Cooling fins and air passages for the engine are plugged.	4. Remove the obstructions from the cooling fins and air passages.
	5. Fuel tank vent system is plugged.	5. Clean or replace the plugged component.
	6. Dirt in fuel filter.	6. Replace the fuel filter.
	7. Dirt, water, or stale fuel is in the fuel system.	7. Contact an Authorized Service Dealer.

Troubleshooting

Problem	Possible Cause	Corrective Action
Engine overheats.	1. Engine load is excessive. 2. Oil level in the crankcase is low. 3. Cooling fins and air passages for the engine are plugged.	1. Reduce the ground speed. 2. Add oil to the crankcase. 3. Remove the obstructions from the cooling fins and air passages.
Mower pulls left or right (with levers fully forward).	1. Tracking needs adjustment. 2. Tire pressure in drive tires not correct. 3. Reverse indicator and speed control linkage need adjustment.	1. Adjust the tracking. 2. Adjust tire pressure in the drive tires. 3. Adjust the reverse indicator and the speed control linkage.
Machine does not drive.	1. Bypass valve is not closed tight. 2. Drive or pump belt is worn, loose or broken. 3. Drive or pump belt is off a pulley. 4. Broken or missing idler spring. 5. Hydraulic fluid level is low or too hot.	1. Tighten the bypass valve. 2. Change the belt. 3. Change the belt. 4. Replace the spring. 5. Add hydraulic fluid to reservoir or let it cool down.
Abnormal vibration.	1. Cutting blade(s) is/are bent or unbalanced. 2. Blade mounting bolt is loose. 3. Engine mounting bolts are loose. 4. Loose engine pulley, idler pulley, or blade pulley. 5. Engine pulley is damaged. 6. Blade spindle is bent. 7. Belt is damaged.	1. Install new cutting blade(s). 2. Tighten the blade mounting bolt. 3. Tighten the engine mounting bolts. 4. Tighten the appropriate pulley. 5. Contact an Authorized Service Dealer. 6. Contact an Authorized Service Dealer. 7. Install new belt.
Uneven cutting height.	1. Blade(s) not sharp. 2. Cutting blade(s) is/are bent. 3. Mower deck is not level. 4. Underside of mower is dirty. 5. Tire pressure in drive tires not correct. 6. Spacers are in wrong location. 7. Tips of adjacent blades are at an uneven cutting height. Blades tips should be even within 3/16 inch which is approximately one blade thickness.	1. Sharpen the blade(s). 2. Install new cutting blade(s). 3. Level mower deck from side-to-side and front-to-rear. 4. Clean the underside of the mower. 5. Adjust tire pressure in the drive tires. 6. Position spacers under hairpins. 7. Replace blades, spindles and (or) check for damage to mower deck.
Blades do not rotate.	1. PTO belt is worn, loose, or broken. 2. PTO shaft is not connected. 3. PTO belt is off pulley.	1. Check belt tension or replace belt 2. Connect PTO shaft. 3. Check belt for damage. Install belt and check adjusting shafts and belt guides for correct position.

Schematics

Electrical Schematic — All Units Except Kohler EFI

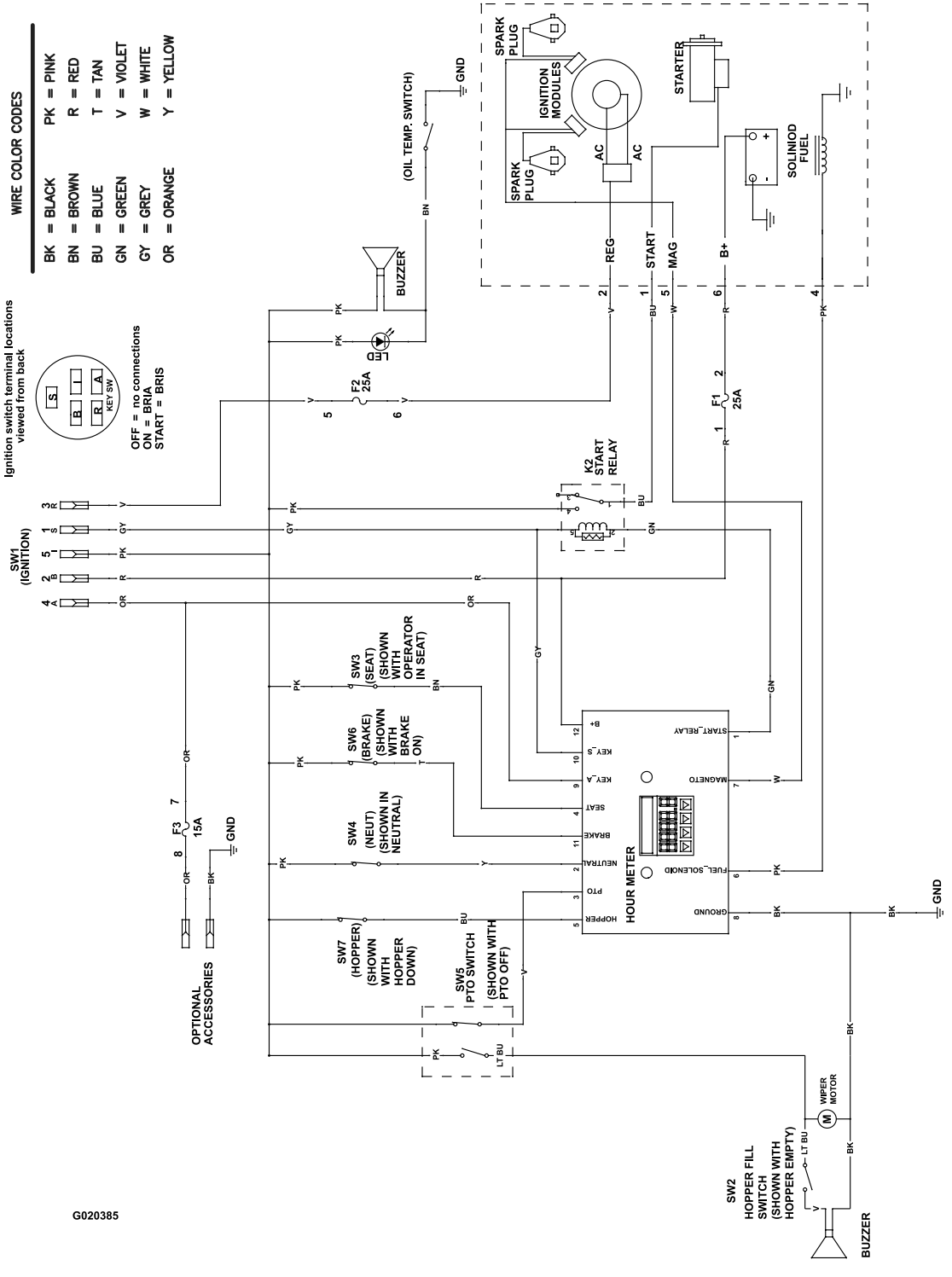

Electrical Schematic — Kohler EFI

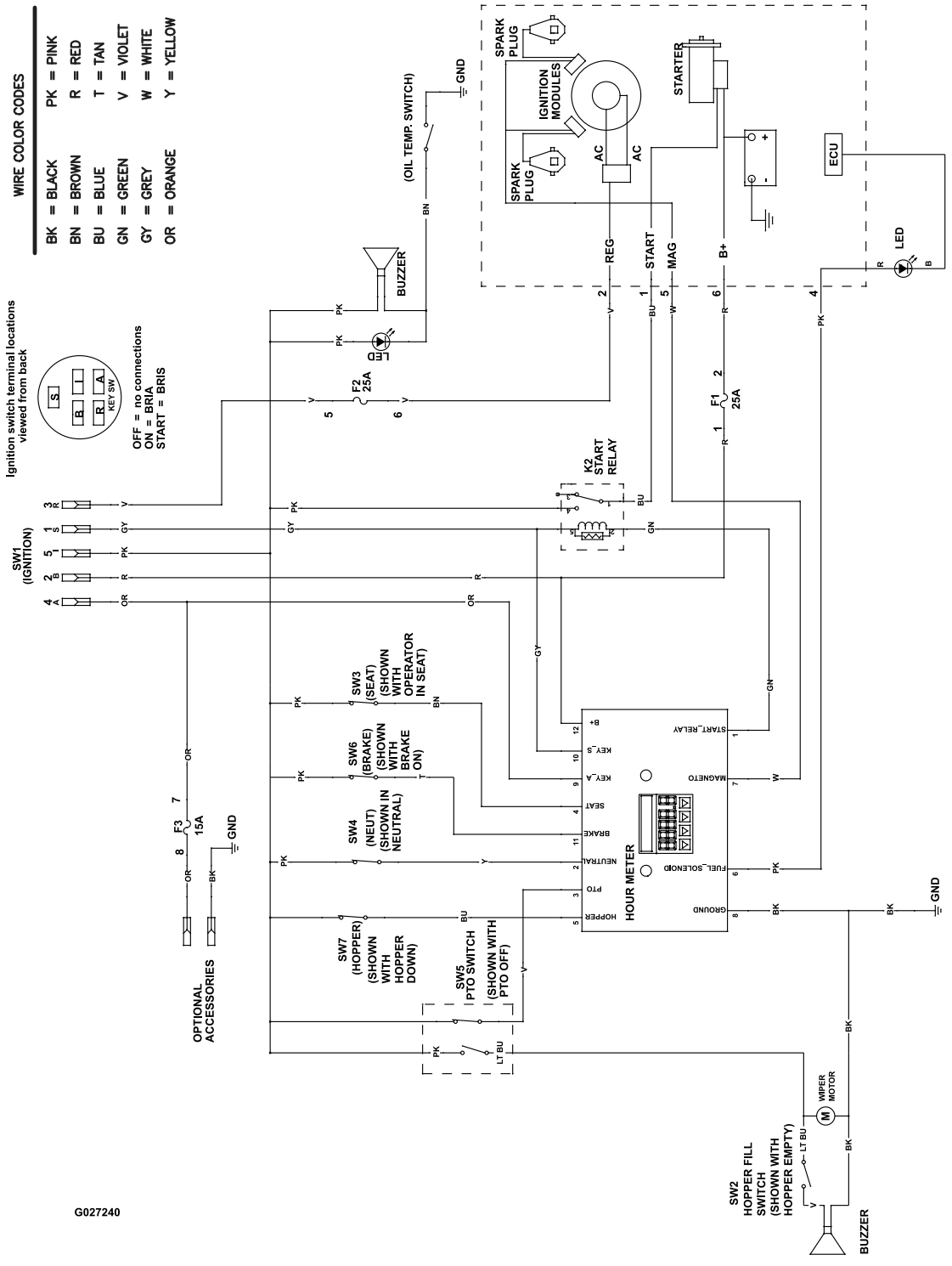

Hydraulic Diagram

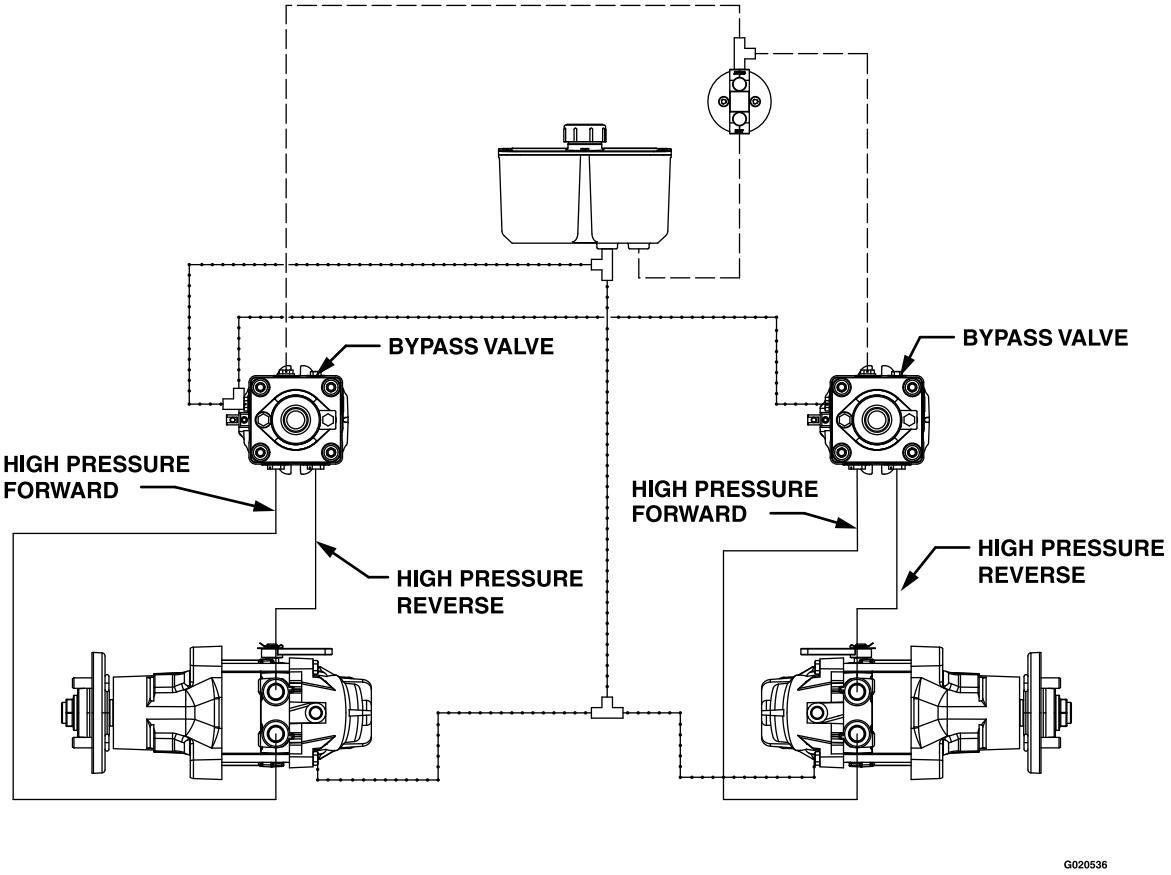

HIGH PRESSURE
CHARGE PUMP
CASE DRAIN

g020536

California Proposition 65 Warning Information

What is this warning?

You may see a product for sale that has a warning label like the following:



WARNING: Cancer and Reproductive Harm—www.p65Warnings.ca.gov.

What is Prop 65?

Prop 65 applies to any company operating in California, selling products in California, or manufacturing products that may be sold in or brought into California. It mandates that the Governor of California maintain and publish a list of chemicals known to cause cancer, birth defects, and/or other reproductive harm. The list, which is updated annually, includes hundreds of chemicals found in many everyday items. The purpose of Prop 65 is to inform the public about exposure to these chemicals.

Prop 65 does not ban the sale of products containing these chemicals but instead requires warnings on any product, product packaging, or literature with the product. Moreover, a Prop 65 warning does not mean that a product is in violation of any product safety standards or requirements. In fact, the California government has clarified that a Prop 65 warning "is not the same as a regulatory decision that a product is 'safe' or 'unsafe.'" Many of these chemicals have been used in everyday products for years without documented harm. For more information, go to https://oag.ca.gov/prop65/faqs-view-all.

A Prop 65 warning means that a company has either (1) evaluated the exposure and has concluded that it exceeds the "no significant risk level"; or (2) has chosen to provide a warning based on its understanding about the presence of a listed chemical without attempting to evaluate the exposure.

Does this law apply everywhere?

Prop 65 warnings are required under California law only. These warnings are seen throughout California in a wide range of settings, including but not limited to restaurants, grocery stores, hotels, schools, and hospitals, and on a wide variety of products. Additionally, some online and mail order retailers provide Prop 65 warnings on their websites or in catalogs.

How do the California warnings compare to federal limits?

Prop 65 standards are often more stringent than federal and international standards. There are various substances that require a Prop 65 warning at levels that are far lower than federal action limits. For example, the Prop 65 standard for warnings for lead is 0.5 µg/day, which is well below the federal and international standards.

Why don't all similar products carry the warning?

- Products sold in California require Prop 65 labelling while similar products sold elsewhere do not.
- A company involved in a Prop 65 lawsuit reaching a settlement may be required to use Prop 65 warnings for its products, but other companies making similar products may have no such requirement.
- The enforcement of Prop 65 is inconsistent.
- Companies may elect not to provide warnings because they conclude that they are not required to do so under Prop 65; a lack of warnings for a product does not mean that the product is free of listed chemicals at similar levels.

Why does Exmark include this warning?

Exmark has chosen to provide consumers with as much information as possible so that they can make informed decisions about the products they buy and use. Exmark provides warnings in certain cases based on its knowledge of the presence of one or more listed chemicals without evaluating the level of exposure, as not all the listed chemicals provide exposure limit requirements. While the exposure from Exmark products may be negligible or well within the "no significant risk" range, out of an abundance of caution, Exmark has elected to provide the Prop 65 warnings. Moreover, if Exmark does not provide these warnings, it could be sued by the State of California or by private parties seeking to enforce Prop 65 and subject to substantial penalties.

Service Record

Date:	Description of Work Done:	Service Done By:

MAXIMIZE THE PERFORMANCE OF YOUR EXMARK MACHINE.



EXMARK® PREMIUM ENGINE OIL

Exmark now offers a family of engine oil viscosities to perform well in any environment. Each viscosity has the same synthetic formulation to give you what you need in punishing conditions. We designed each grade to the highest quality, making it ideal even for diesel applications. Coupled with Exmark Premium Fuel Treatment, we have the performance products to make your machine hum.

EXMARK PREMIUM ENGINE OIL SAE 30/10W-30

- Meets zero shear requirements of a straight grade SAE 30 as well as the cold temp properties of a 10W-30.
- Most versatile oil in the industry.
- Superior corrosion protection over conventional oil - even in corrosive, humid environments.

EXMARK PREMIUM ENGINE OIL SAE 10W-50

- Full synthetic formulation gives you peak performance. Don't settle for less.
- Wide span multi-grade combines easy starting in cold weather with maximum protection in high temperature operation.
- Reduce friction & wear over standard mineral formulations.

EXMARK PREMIUM ENGINE OIL UTV FORMULATION

- 4-cycle high-temp formulation.
- Heavier viscosity, full synthetic, perfect for your UTV.

EXMARK PREMIUM ENGINE OIL SAE 20W-50

- Perfect for your big block engine, or any application in severe service.
- Same full synthetic formulation as all other Exmark Premium viscosities.
- Also effective for use in severe service small block engines.

EXMARK PREMIUM ENGINE OIL SAE 0W-40

- The perfect choice for when the weather turns cold or unpredictable, and your Exmark UTV has to perform.
- Commercial quality for severe service.
- Advanced additive package helps prevent corrosion from long-term storage.

EXMARK PREMIUM UTV EXTREME CONDITIONS GEAR OIL

- SAE 80W-90, designed to keep your UTV performing at its peak.
- Shear stable, hypoid gear lube.
- Includes a premium additive system to combat wear, oxidation, rust & corrosion.

Available from your local Exmark dealer. Find your closest dealer at exmark.com

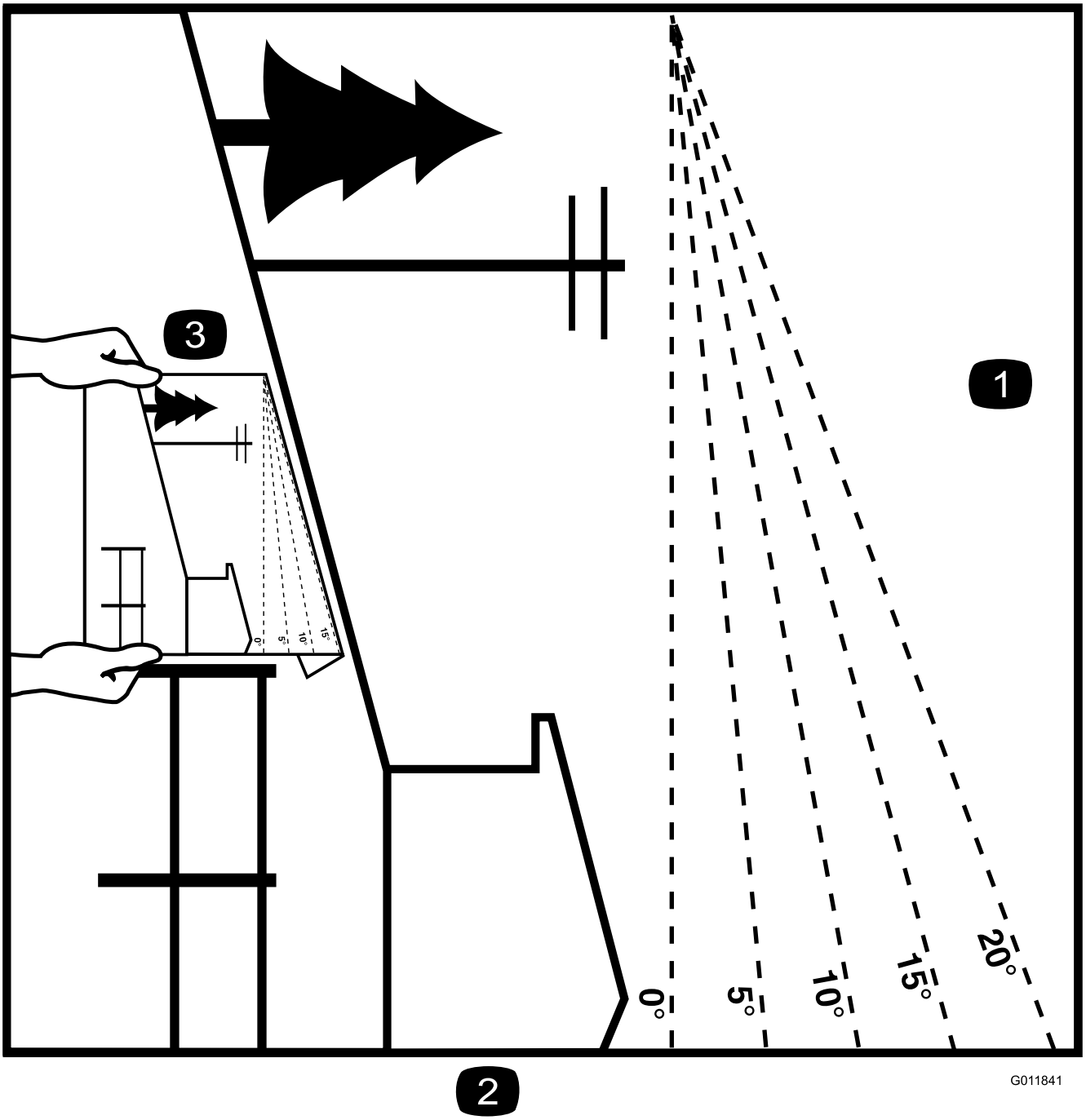

Figure 43

This page may be copied for personal use.

1. The maximum slope you can operate the machine on is **15 degrees**. Use the slope indicator to determine the degree of slope of hills before operating. **Do Not operate this machine on a slope greater than 15 degrees.** Fold along the appropriate line to match the recommended slope.
2. Align this edge with a vertical surface, a tree, building, fence pole, etc.
3. Example of how to compare slope with folded edge.

EXMARK ACCESSORIES AND OPTIONS*

MID-MOUNT RIDING ACCESSORIES AND OPTIONS

CUSTOM RIDE SEAT SUSPENSION SYSTEM
FULL SUSPENSION SEAT
DECK LIFT ASSIST KIT
HITCH KIT
LIGHT KIT
12V POWER PORT
MICRO-MULCH SYSTEM
OPERATOR CONTROLLED DISCHARGE
SUN SHADE
TRASH CONTAINER
TURF STRIPER
ULTRA VAC COLLECTION SYSTEM
ULTRA VAC QUICK DISPOSAL SYSTEM

OUT-FRONT RIDING ACCESSORIES AND OPTIONS

CUSTOM RIDE SEAT SUSPENSION SYSTEM
DUAL-TAIL WHEEL
FLOOR PAN EXTENDER
HITCH KIT
LIGHT KIT
MICRO-MULCH SYSTEM
ROLL OVER PROTECTION SYSTEM (ROPS)
SNOW BLADE
SNOWBLOWER
SUN SHADE
TRASH CONTAINER
ULTRA VAC COLLECTION SYSTEM
ULTRA VAC QUICK DISPOSAL SYSTEM
WEATHER CAB

WALK-BEHIND ACCESSORIES AND OPTIONS

GRASS CATCHER
MICRO-MULCH SYSTEM
TURF STRIPER
STANDON

*Some accessories and options not available for some models.

Place Model No. and Serial No. Label Here (Included in the Literature Pack) or Fill in Below

Model No. _____

Serial No. _____

Date Purchased _____

Engine Model No. and Spec. No. _____

Engine Serial No. (E/No) _____

©2026 Exmark Mfg. Co., Inc.
415 Industrial Row
Beatrice, NE 68310
All Rights Reserved

Part No. 3480-847 Rev. A
(402) 223-6375
Printed in the USA



www.exmark.com