封面

There are two options available for your use.
*When mounting the device on the wall and connecting it to a DC input through the access control port, please do not connect the power adapter to the Type-C port at the same time.

Option A

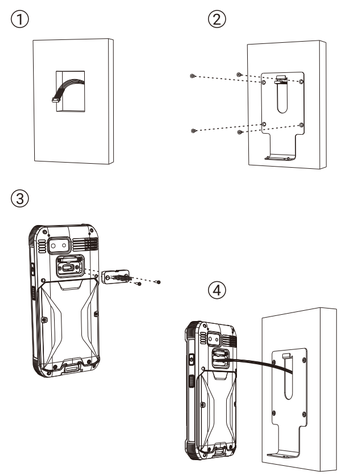

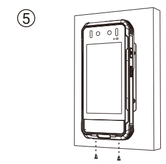

Option B

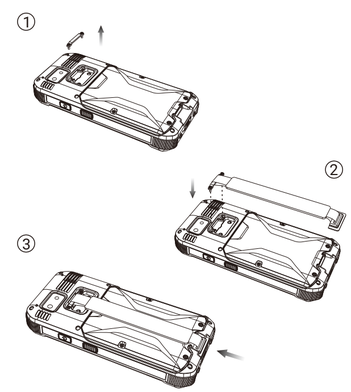

Accessories

Main Device	1Set
Power Adapter	1Piece
Battery	1Piece
User Guide	1Volume
Screwdriver	1Volume
USB Cable	1Piece
Bracket	1piece
Wristband	1Piece

Before using the device, ensure that all the accessories above are included in the package.

If you have any problems, please contact the services provider of the distributors.

Rugged Mobile Terminal

User Guide

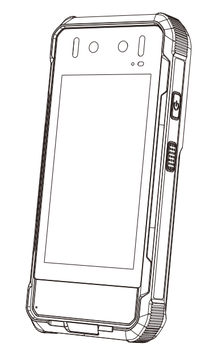

材质为105铜版纸，页面1和页面2，双面印刷，成品尺寸为90*150mm，风琴折

Product Description

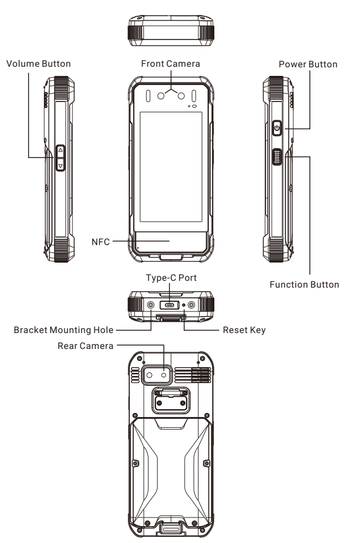

NFC Card Reading

1. Put the NFC card above the NFC board and hold.

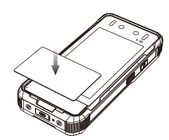

SIM Card, SAM Card & TF Card Installation

1. Remove the four screws and remove the battery cover as figure. Take out the battery and remove the sticker.

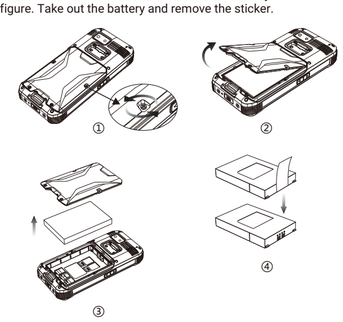

2. Push the SIM card into the socket correctly. Be sure the SIM card is in right position.

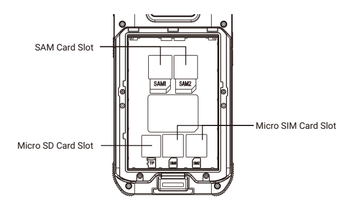

Specific Absorption Rate (SAR) information:
This Rugged Mobile Terminal meets the government's requirements for exposure to radiowaves. The guidelines are based on standards that were developed by independentscientific organizations through periodic and thorough evaluation of scientific studies.The standards include a substantial safety margin designed to assure the safety of allpersons regardless of age or health. FCC RF Exposure Information and Statementthe SAR limit of USA (FCC) is 1.6 W/kg averaged over one gram of tissue. Devicetypes: Rugged Mobile Terminal has also been tested against this SAR limit. This devicewas tested for typical body-worn operations with the back of the device kept 0mmfrom the body. To maintain compliance with FCC RF exposure requirements, useaccessories that maintain an 0mm separation distance between the user's body andthe back of the device. The use of belt clips, holsters and similar accessories shouldnot contain metallic components in its assembly. The use of accessories that do notsatisfy these requirements may not comply with FCC RF exposure requirements, andshould be avoided.

Battery Installation

1. Put the battery into the holder and install the battery cover as figure. Then lock the battery cover with four screws.

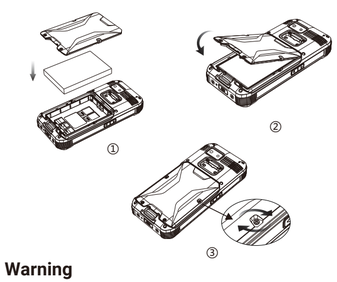

Warning

1. This device uses a custom battery. Please not replace other types of batteries.
   CAUTION: Attempting to replace the incorrect battery can cause an explosion from the battery.
2. Do not put the battery into the fire or a hot oven, or undergo mechanical shock or crush, there is a danger of explosion.
3. If the battery is not used for a long time (>6 months), please charge it to 50%~70%, then remove it from the device, and store it in the environment of 10°C~35°C, 45%RH~85%RH. It is recommended that the battery should be recharged every 3 months to avoid damaging.
4. If the device is not used for more than 2 weeks, please unplug the battery to prevent overcharge.

FCC Statement

This equipment has been tested and found to comply with the limits for a Class B digital device, pursuant to part 15 of the FCC Rules. These limits are designed to provide reasonable protection against harmful interference in a residential installation. This equipment generates, uses and can radiate radio frequency energy and, if not installed and used in accordance with the instructions, may cause harmful interference to radio communications. However, there is no guarantee that interference will not occur in a particular installation. If this equipment does cause harmful interference to radio or television reception, which can be determined by turning the equipment off and on, the user is encouraged to try to correct the interference by one or more of the following measures:
•Reorient or relocate the receiving antenna.
•Increase the separation between the equipment and receiver.
•Connect the equipment into an outlet on a circuit different from that to which the receiver is connected.
•Consult the dealer or an experienced radio/TV technician for help.
Caution: Any changes or modifications to this device not explicitly approved by manufacturer could void your authority to operate this equipment.
This device complies with part 15 of the FCC Rules. Operation is subject to the following two conditions: (1) This device may not cause harmful interference, and (2) this device must accept any interference received, including interference that may cause undesired operation.

封底