GP-RGB-SBAR

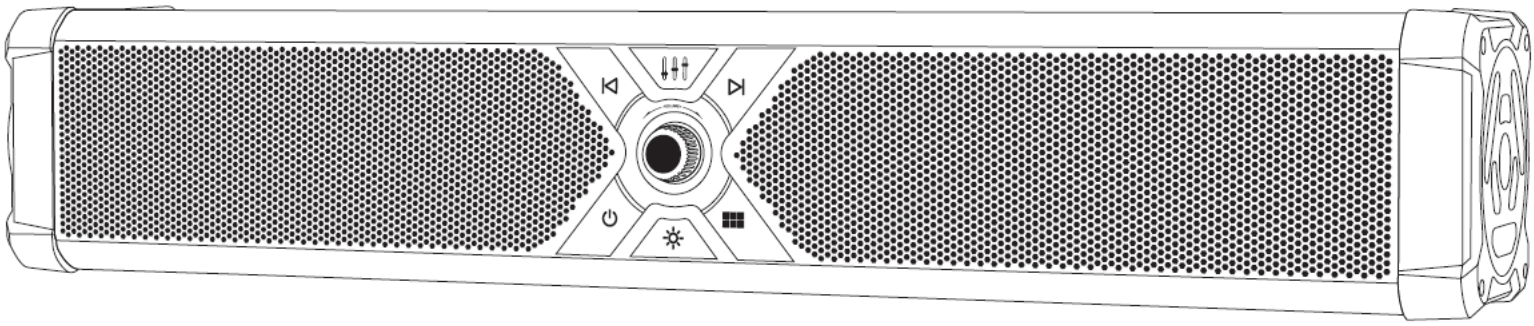

Alpine GloSix

Software Tool Update	
PSS-CAM	2

Types of Precautions

Forbidden	Indicates actions that are forbidden (must not be performed)
Forbidden	Indicates that disassembly is forbidden.
Mandatory	Indicates actions that are mandatory (must be performed)
	Marks content that should receive your full attention.

Warning

Do not disassemble or modify the product. Doing so could lead to an accident, fire, or electric shock. Forbidden

Store screws and other small objects where children cannot reach them. If one of those small objects is swallowed, consult with a doctor immediately.

When replacing fuses be sure to use the fuses with the specified current rating. Failing to do so could lead to an accident or fire. Mandatory Forbidden

Only connect the product to a 12 VDC negative ground car. Failing to do so could lead to an accident or fire. Mandatory

Since this vehicle has two batteries, disconnecting the battery is not a good option. Take caution when testing circuits. Failing to do so could lead to electric shock or injury.

Do not cut the insulation on a cord and take power from another device. Doing so could lead to fire or electric shock. Forbidden

Do not install the product in a location where it willl obstruct the driver's forward view; interfere with the operation of the steering wheel, gear shift, or the like; or pose a threat to passengers. Doing so could lead to an accident or injury. Forbidden

When making a hole in the vehicle body, be careful to avoid damaging pipes, the fuel tank, electrical wiring, and the like. This kind of damage could lead to an accident or fire.

When installing and grounding the product, do not use any of the bolts or nuts of the steering wheel, brakes, fuel tank, or the like. Doing so could make the brakes stop working or could lead to fire. Forbidden

Do not install the product near the passengerside airbag. Doing so could interfere with the operation of the airbag and lead to an accident or injury. Forbidden

Bundle cords so that they don't interfere with driving. Wrapping cords around the steering wheel, gearshift, brake pedal, or the like could lead to an accident or damage equipment.

Caution

Connect the product properly according to the instructions. Failing to do so could lead to fire or an accident. Forbidden

Do not sandwich cords between the seat railing or allow them to touch protrusions. Resulting breaks or shorts could lead to electric shock or fire.

Do not block vents or heat sinks. Doing so could lead to fire or damage equipment.

Use the accessories according to the instructions, and attach them securely. Failing to do so could lead to an accident or damage equipment. Forbidden

Do not install the product where it may be exposed to water or in a place with high levels of humidity or dust. Doing so could lead to fire or damage equipment. Forbidden

The installation and wiring of this product requires specialized skills and experience. Have the product installed by an Alpine authorized dealer.

What's in the box

A: Alpine GloSix
B: Tube Mounting Bracket Set
C: L-Shaped Allen Wrench
D: Power Cable
E: Bluetooth Remote Control and USB-C Charging cable

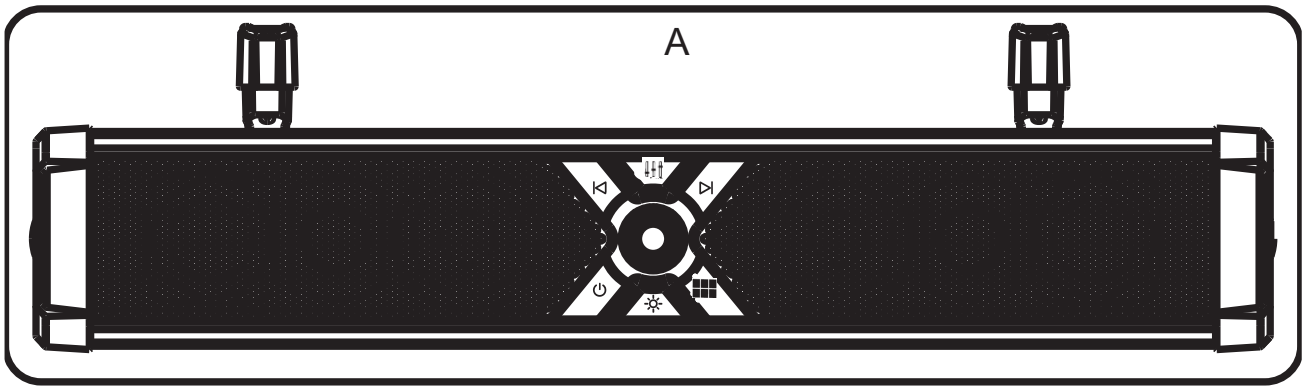

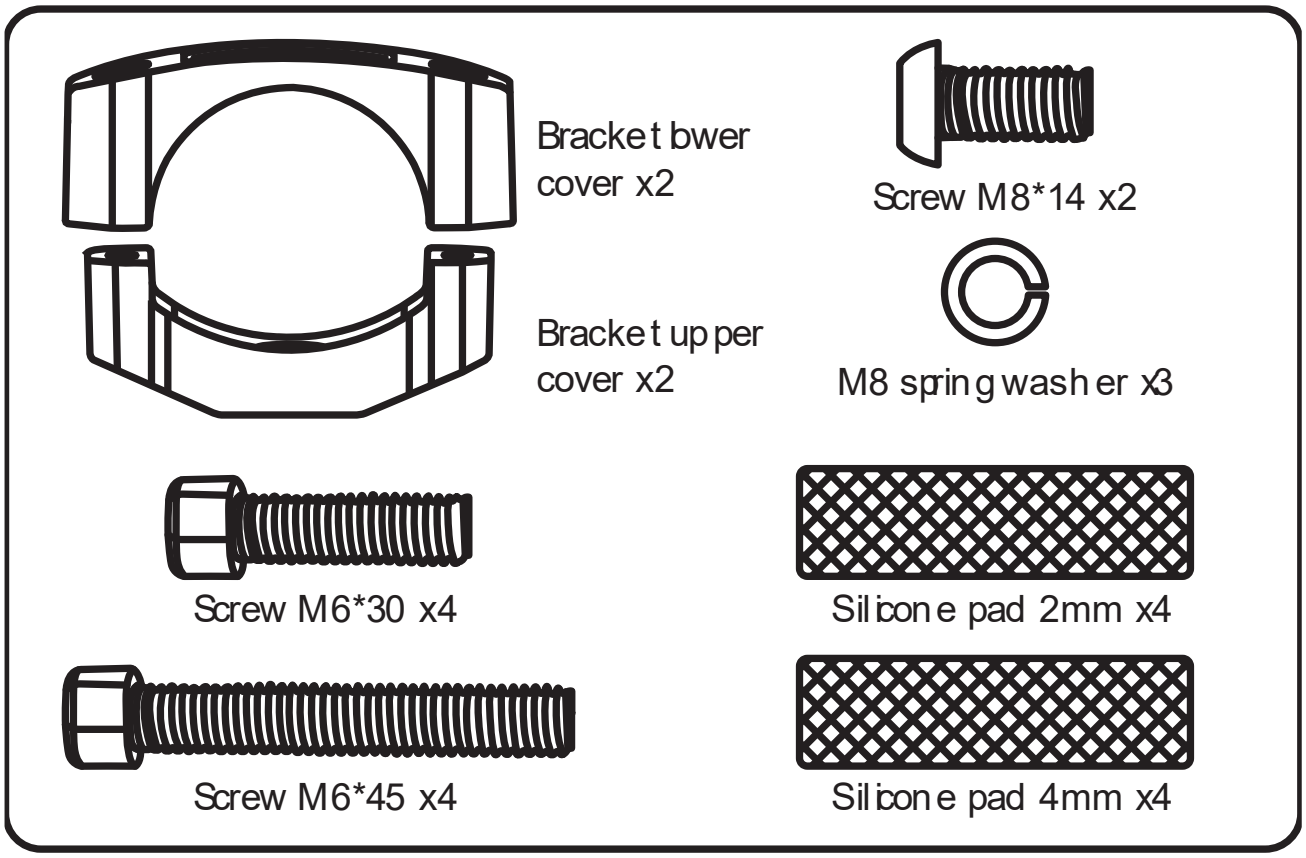

What's in the Box

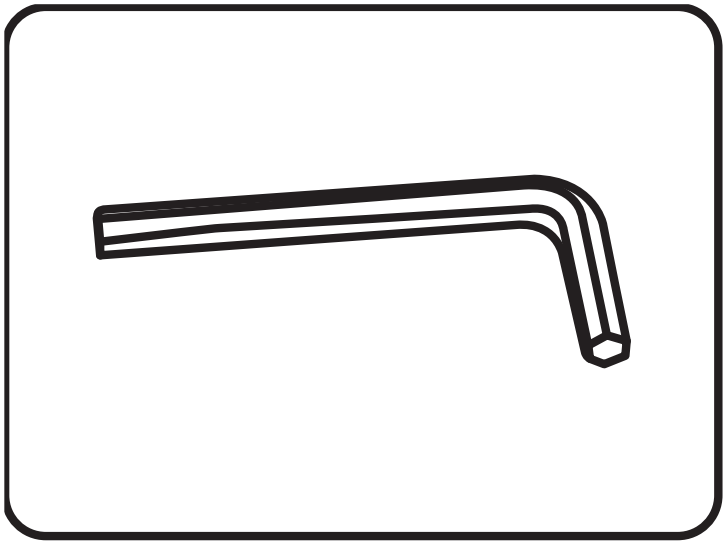

C

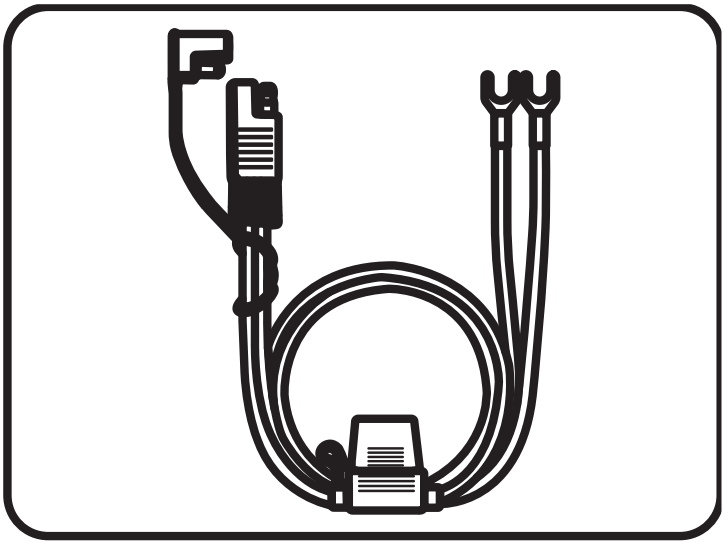

D

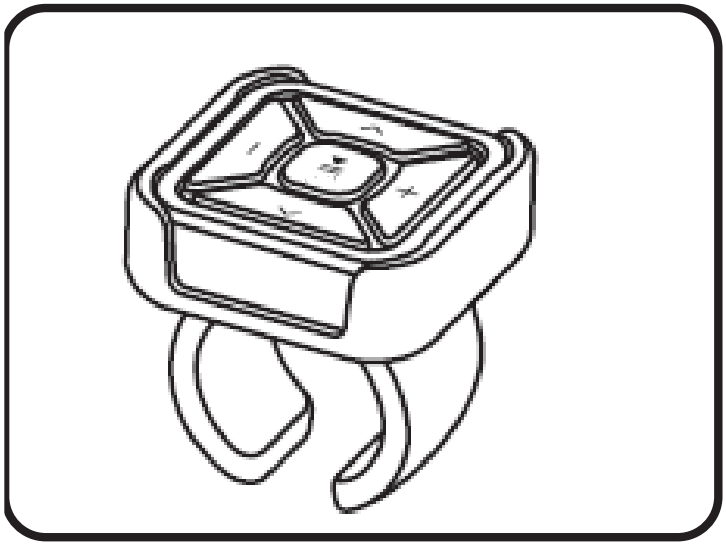

E

Basic Function

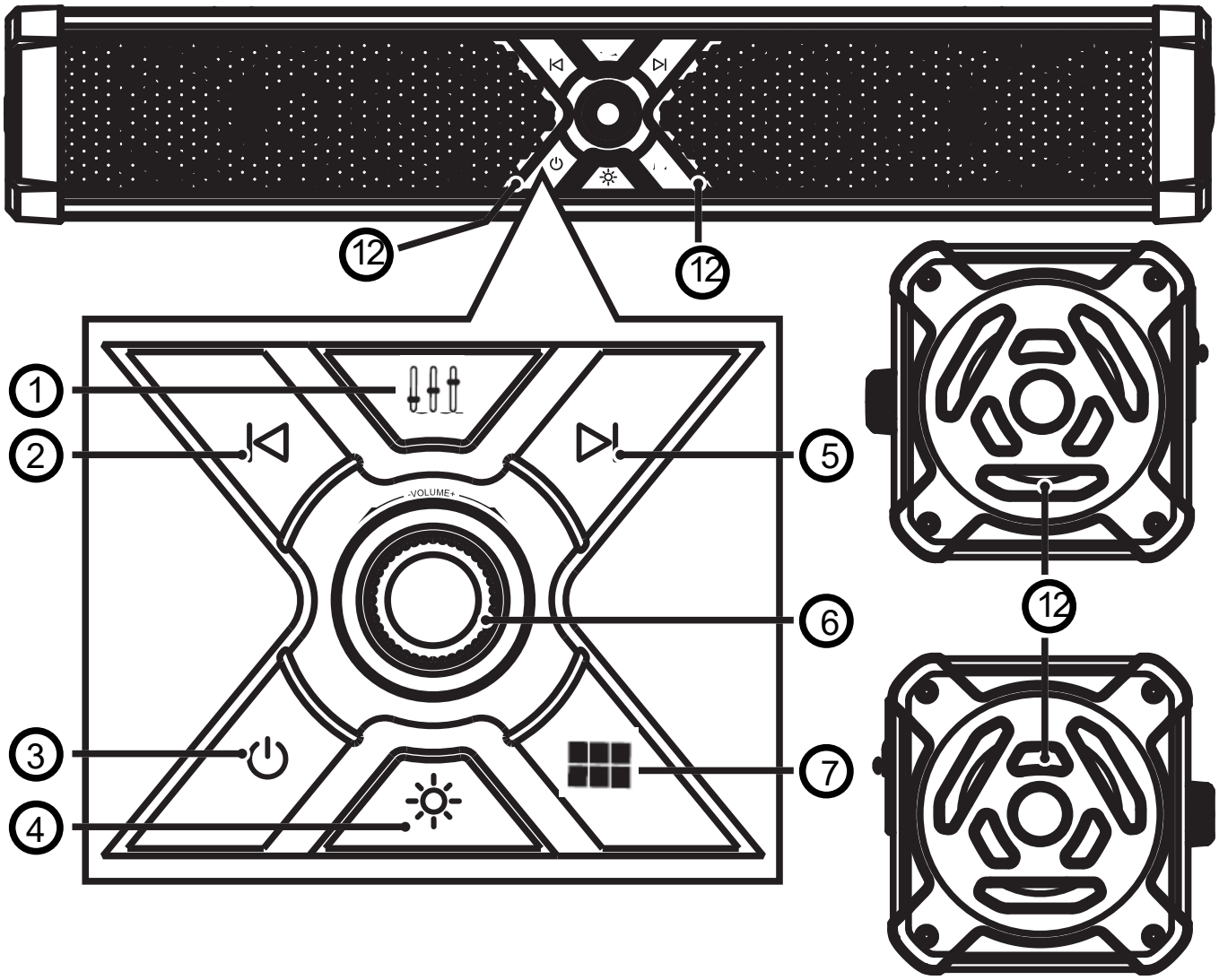

1 EQ Selection Switch

2 Previous Track

3 Power On/Off

4 Lighting Mode

5 Next Track

6 Multifunction Knob

7 Audio Source Selection Switch

Basic Function

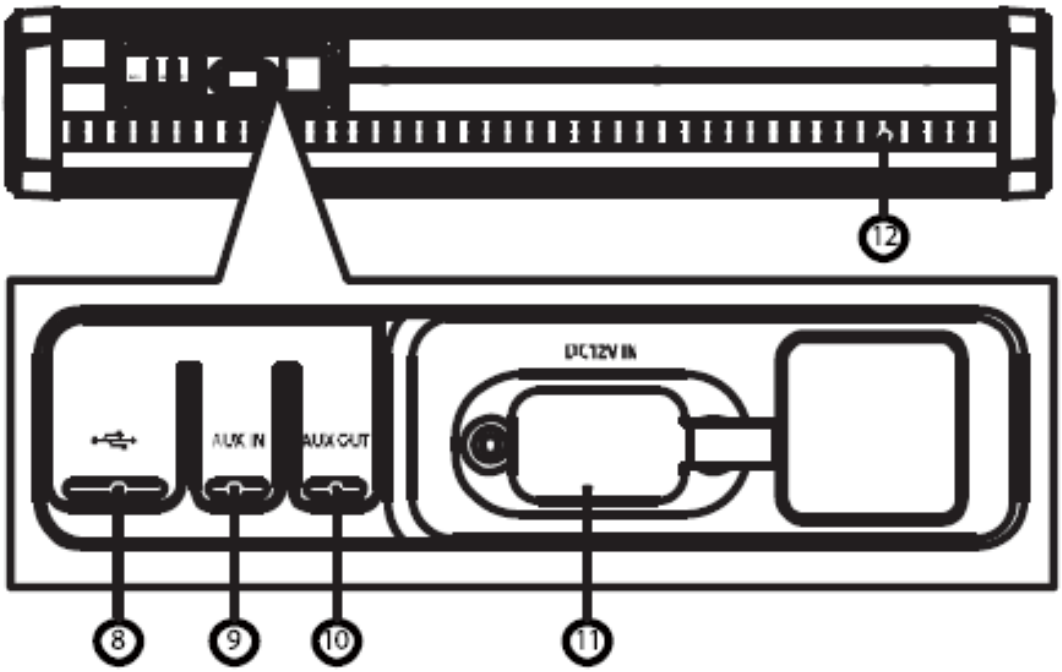

8 USB Flash Drive Port

9 AUX In Port

10 AUX Out Port

11 Power Cable Connection Port

12 Front Panel, Left, Right, Rear lighting

Operation Guide

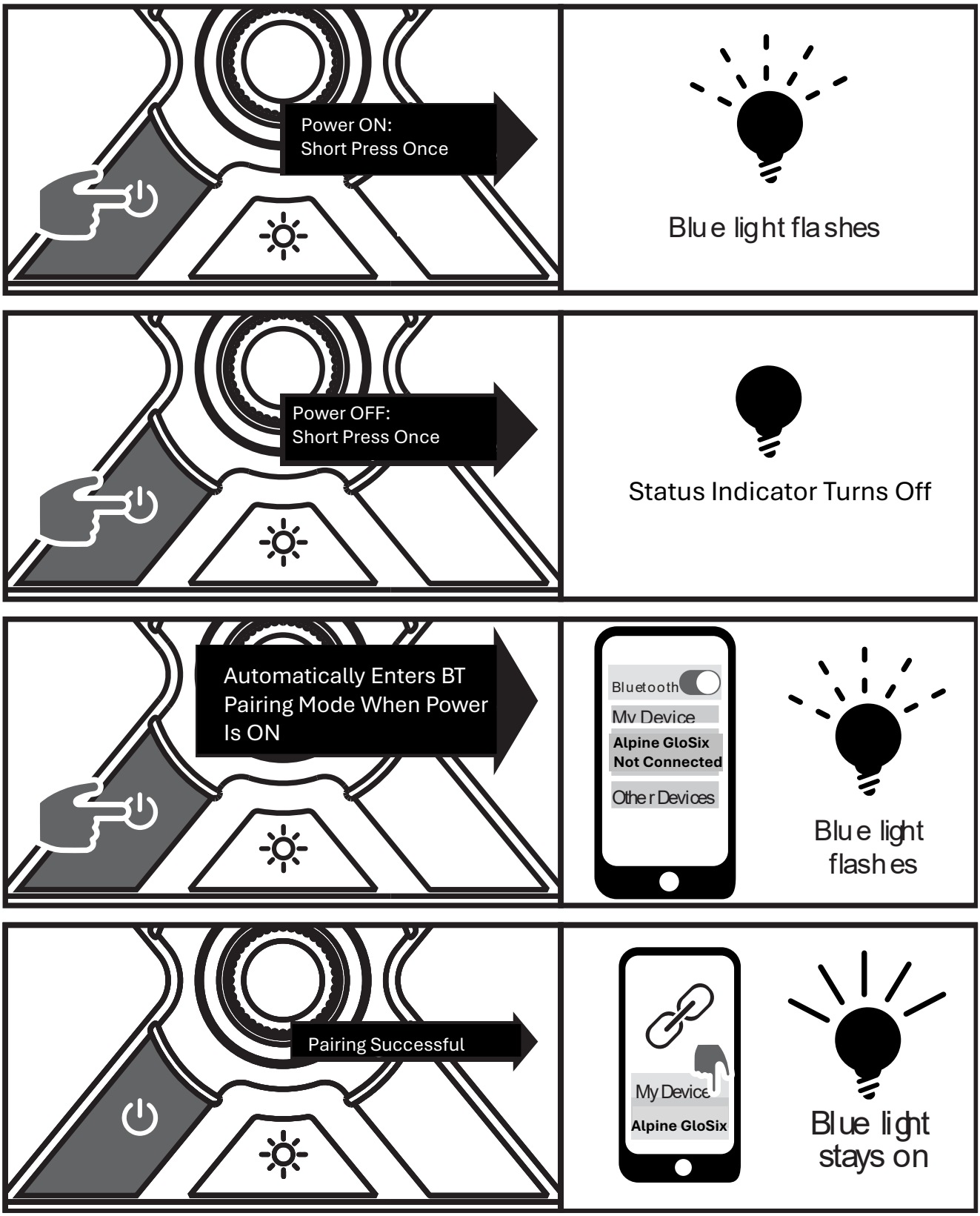

Operation Guide

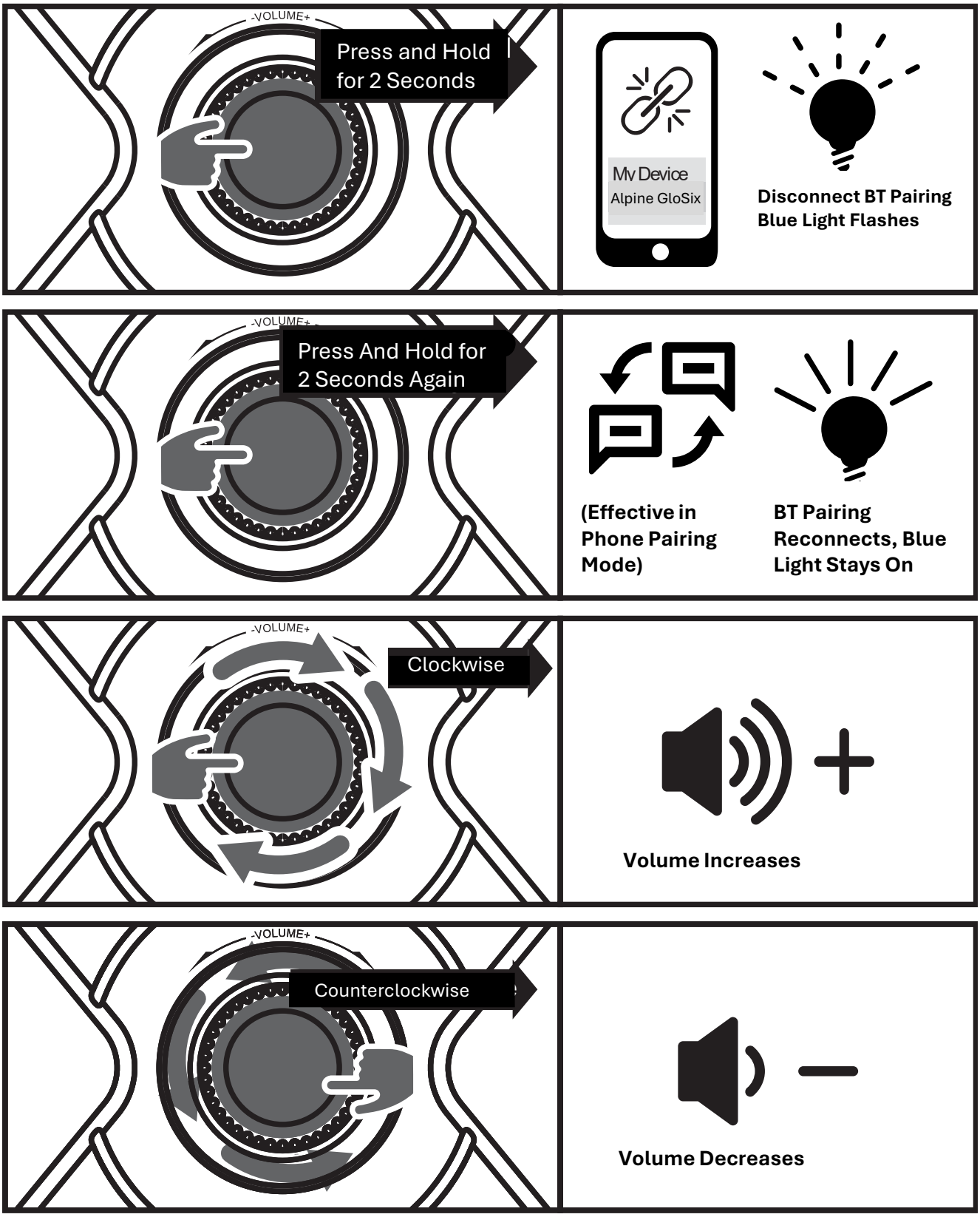

Operation Guide

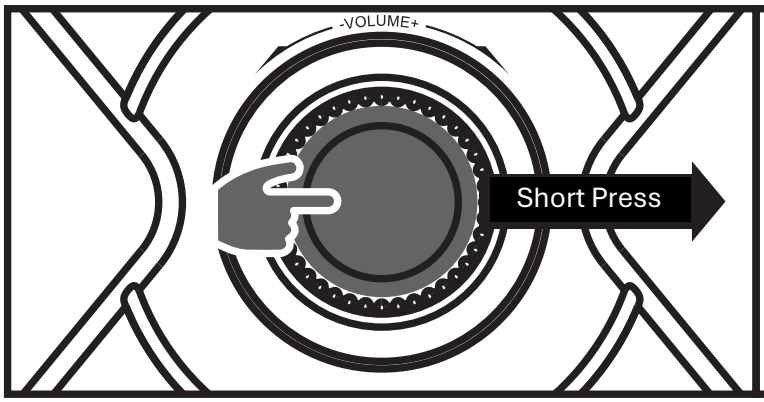

BT Mode: Pauses Playback
AUX Mode: Mutes Audio

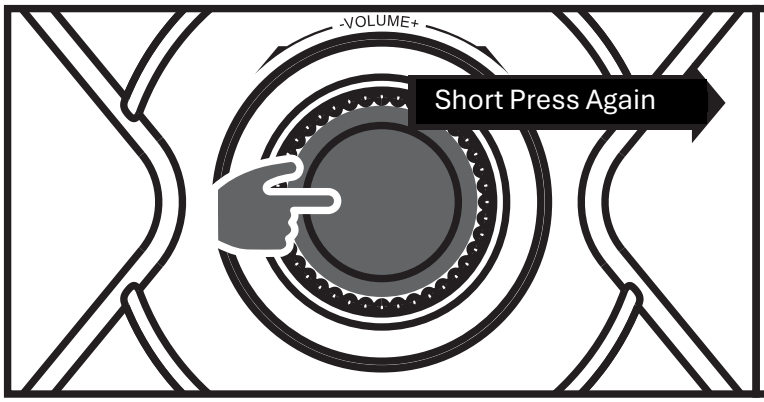

BT Mode: Resumes Playback
AUX Mode: Unmutes Audio

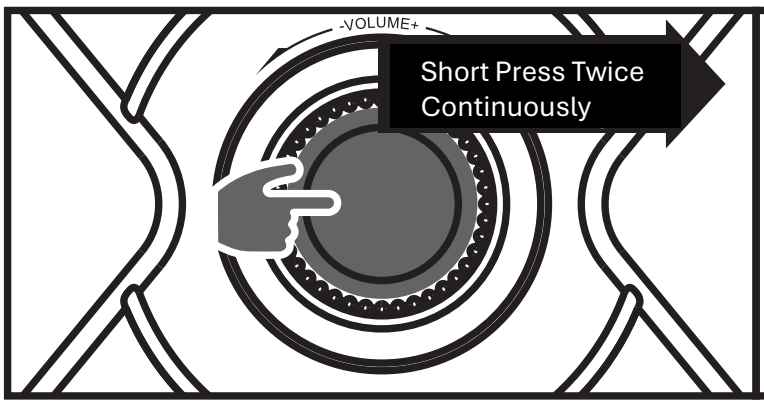

Clears BT Pairing

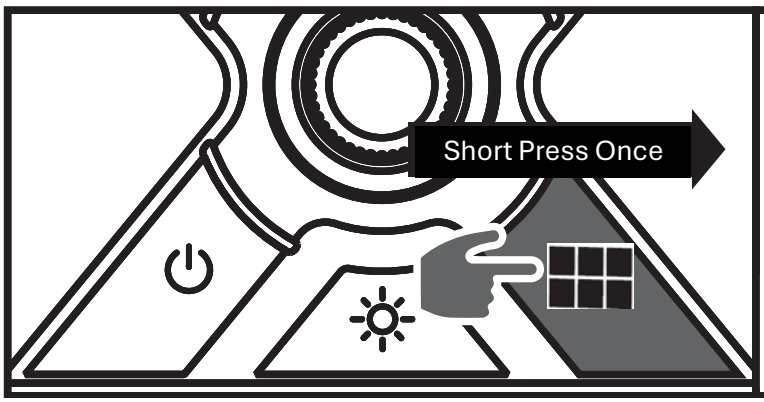

Audio Source Selection

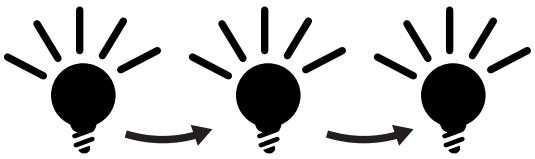

Blue = Bluetooth	Green = AUX Input	Orange = USB Input

Operation Guide – TWS Mode

TWS Mode allows the connection of 2 GloSix soundbars to play music from a single BT equipped smartphone

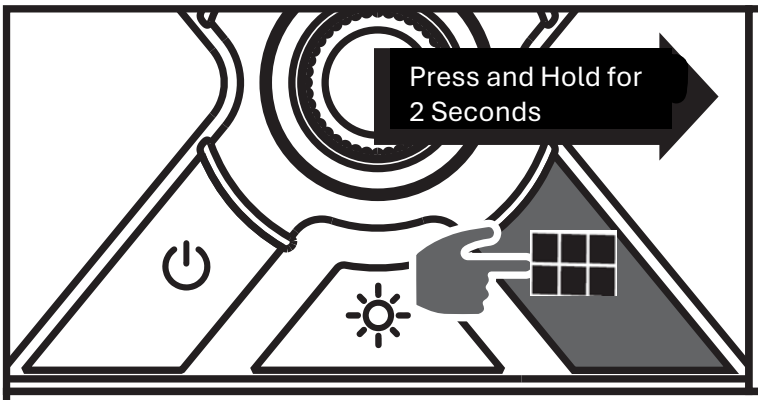

Press and hold for 2 seconds on both GloSix soundbars to start TWS Connection mode

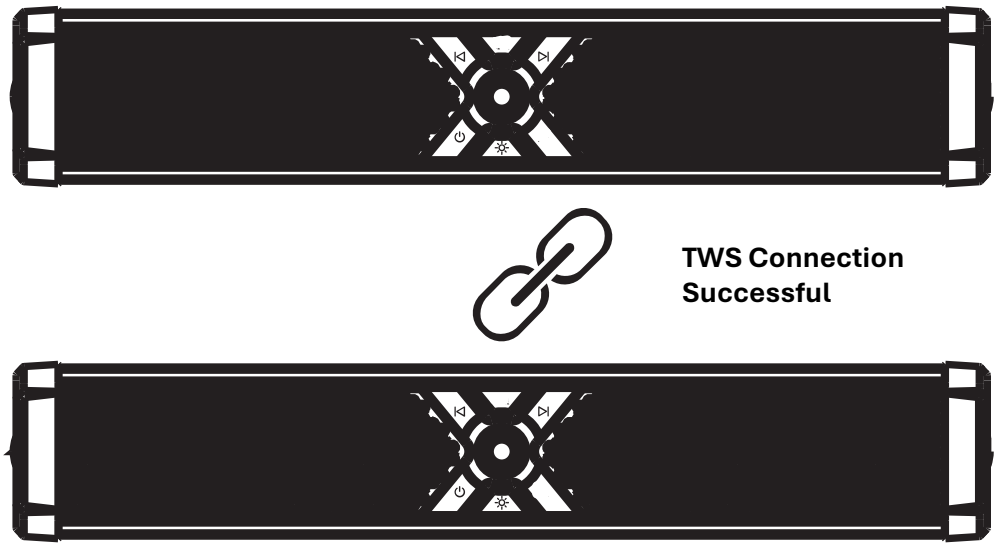

TWS Connection Successful

Primary GloSix status indicator flashes, secondary GloSix status indicator lights continuously

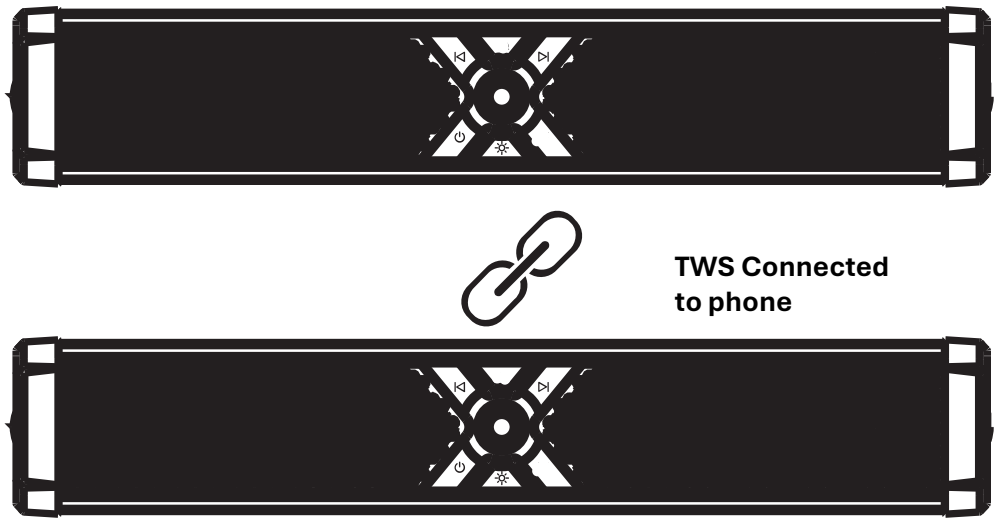

TWS Connected to phone

Primary GloSix status indicator lights continuously

Operation Guide

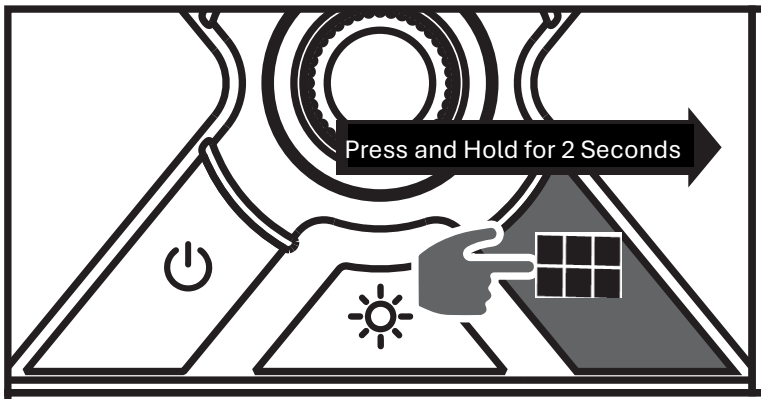

Disconnect TWS Connection

If the primary GloSix is connected to a phone playing music, after TWS disconnection the primary GloSix continues to play music, while the secondary GloSix enters BT pairing mode

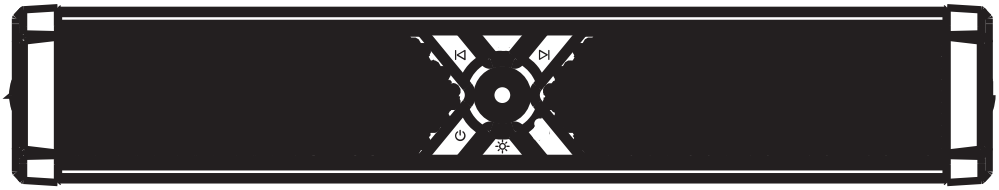

Secondary GloSix indicator flashes blue

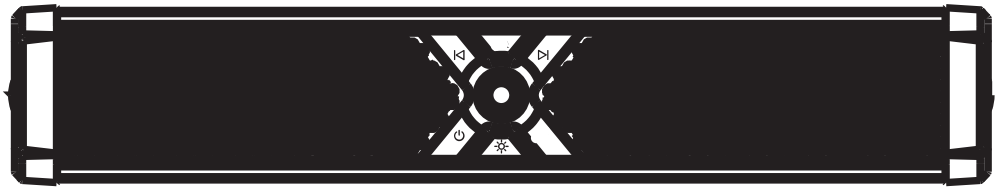

If the Primary GloSix is not connected to a phone after TWS disconnection, both primary and secondary GloSix units enter BT pairing mode

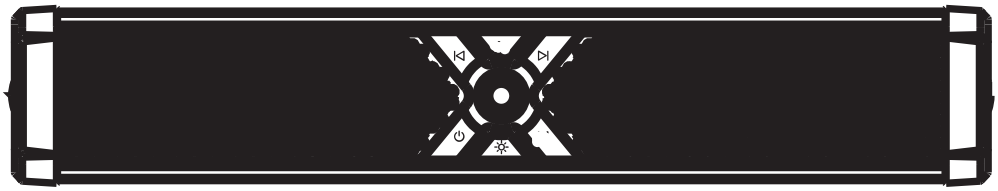

Primary and secondary GloSix units show flashing blue lights

Operation Guide

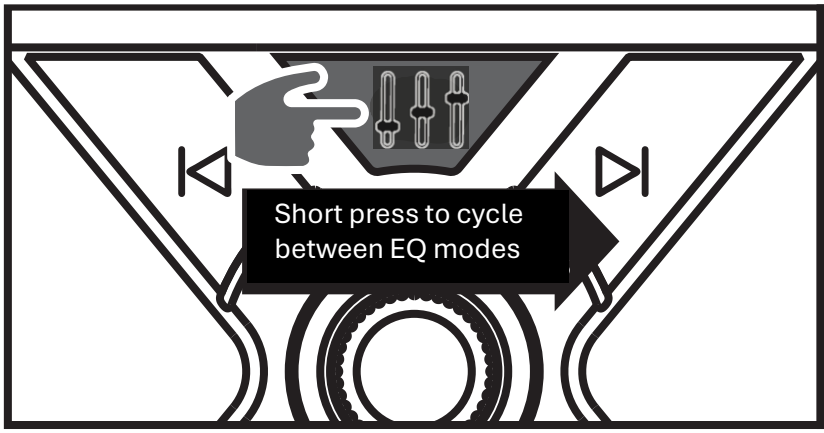

Choose from 3 Equalization Sound Modes:

- **Balanced (default mode)**
- **Alpine**
- **Classic**

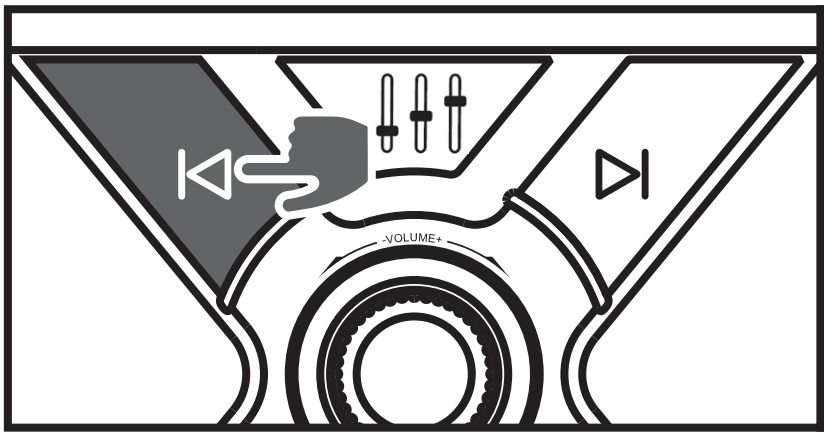

Short Press:
BT Mode: Switch to previous track

USB Mode: Press and hold for 2 seconds to switch to the first track

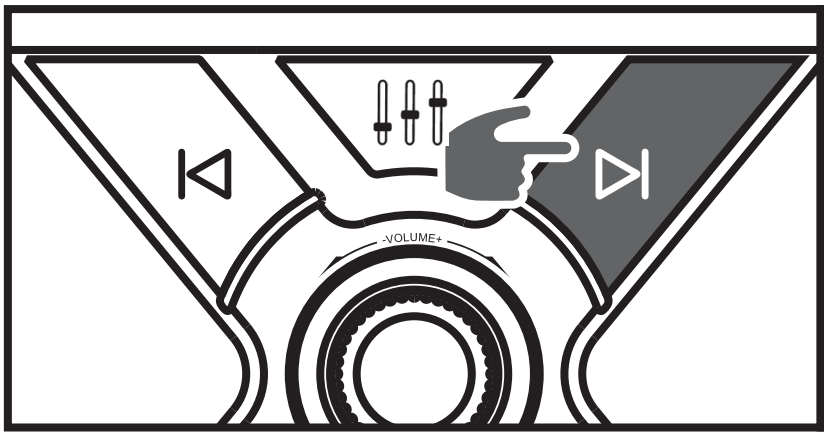

Short Press:
BT Mode: Switch to next track

USB Mode: Press and hold for 2 seconds to switch to the last track

Operation Guide

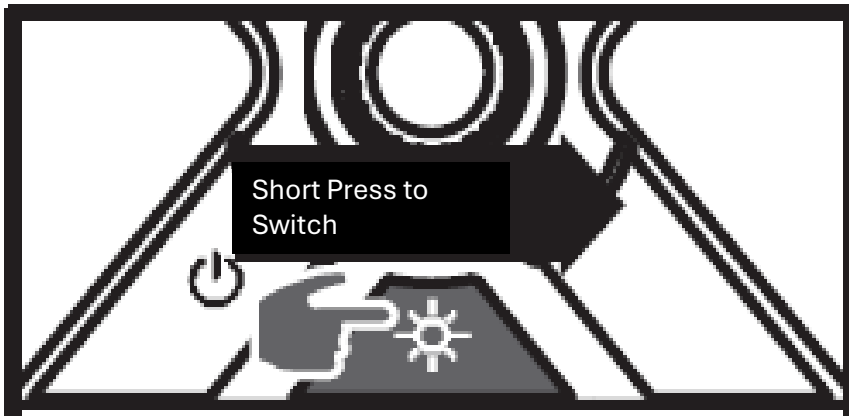

Switch to cycle between 9 colorful light modes. Up to 100 modes can be selected via the smartphone App

Free lighting controller smartphone application (IOS and Android available)

Scan the QR code shown, enter the app store to download and install the free lighting controller app. After installation, turn on the GloSix and smartphone to connect to the GloSix and control up to 100 modes of lighting effects via the app.

Operation Guide

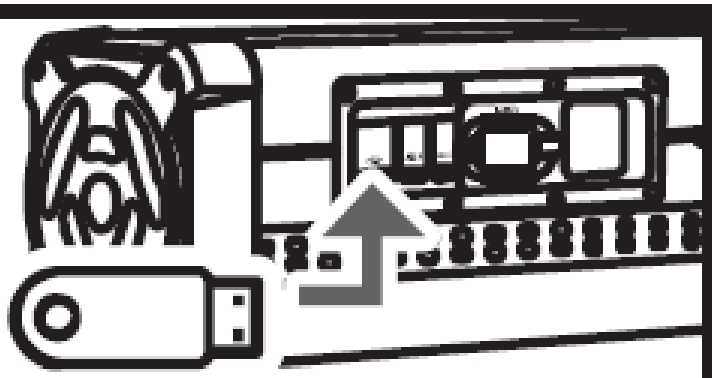

Insert a USB Flash Drive to automatically switch to play music via the USB drive. Status indicator on GloSix will light up Orange

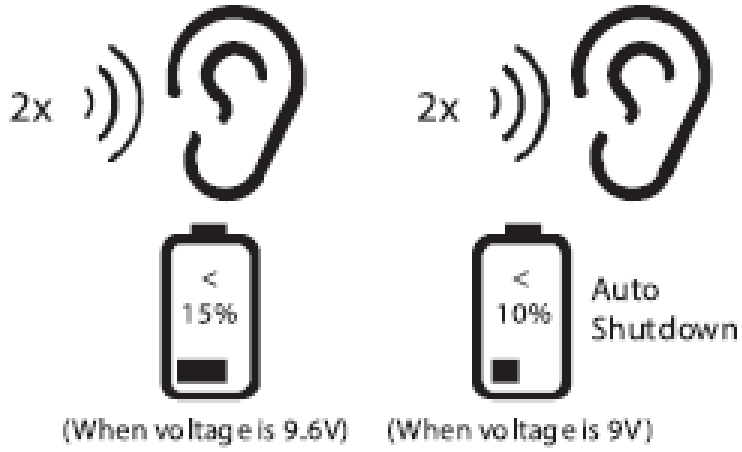

If the vehicle's battery voltage falls below 9.6V, the GloSix will emit 2 beeps through the speakers. This is a warning that the battery's voltage is in critical condition. If the vehicle's battery voltage falls below 9V, the GloSix will emit 2 more beeps, and then will auto shutdown until the battery voltage is restored.

Bluetooth Remote Instructions

The Bluetooth remote puts media control and at your fingertips. Attach the control to the steering wheel or dashboard to safely and conveniently control functions even when your smartphone is out of reach. Play/Pause, Volume and Track Up/Down are available.

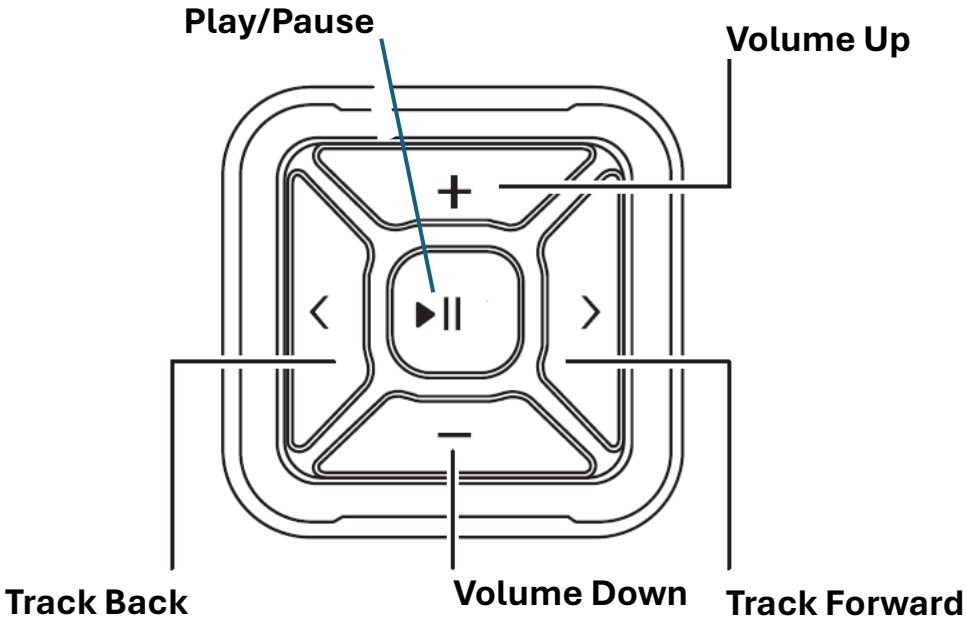

1. **Plug the supplied USB C cable into the port on the back of the remote to make sure the remote is fully charged. It may take 3 hours for the remote to charge.**
2. **Make sure the Bluetooth setting on the smart phone is "ON".**
3. **Check for "GP-BT" on the list of connected devices.**
4. **Select "GP-BT"and wait for the pop-up menu.**
5. **Select "Pair" on the smartphone menu.**

NOTE: If Bluetooth is disconnected, long press the ▶|| button and a green LED will start to blink. The remote will then re-connect to the phone.

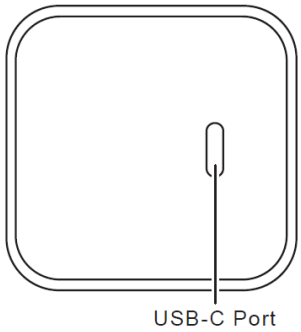

Installation Instructions

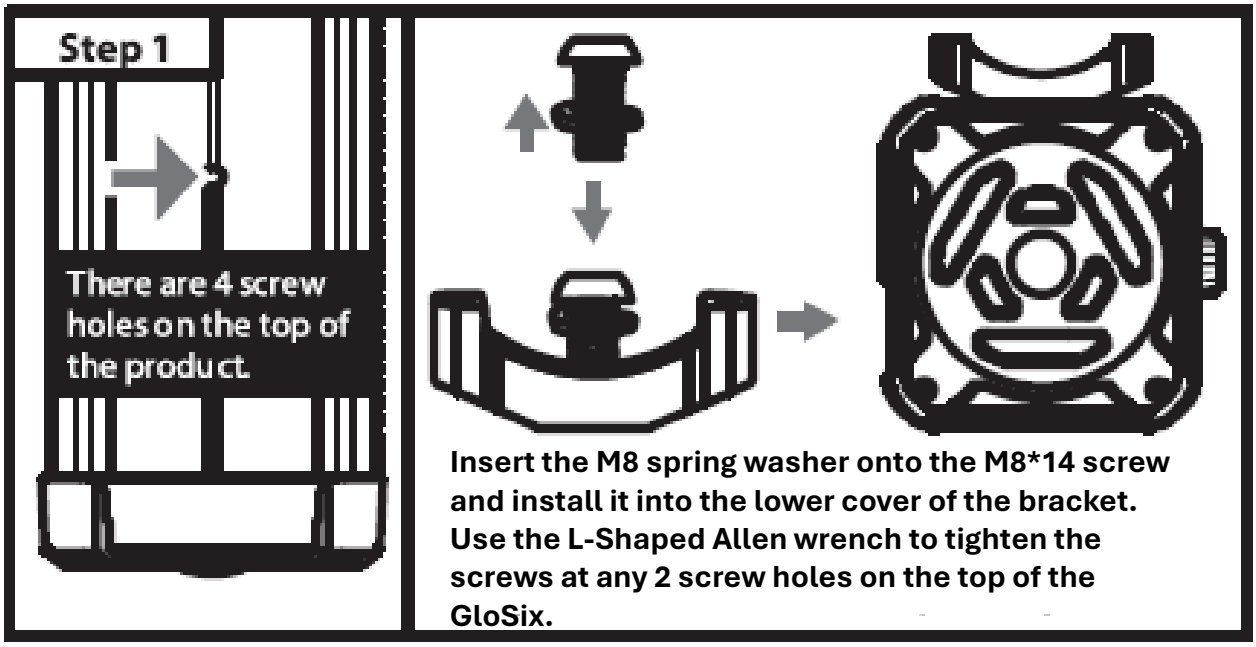

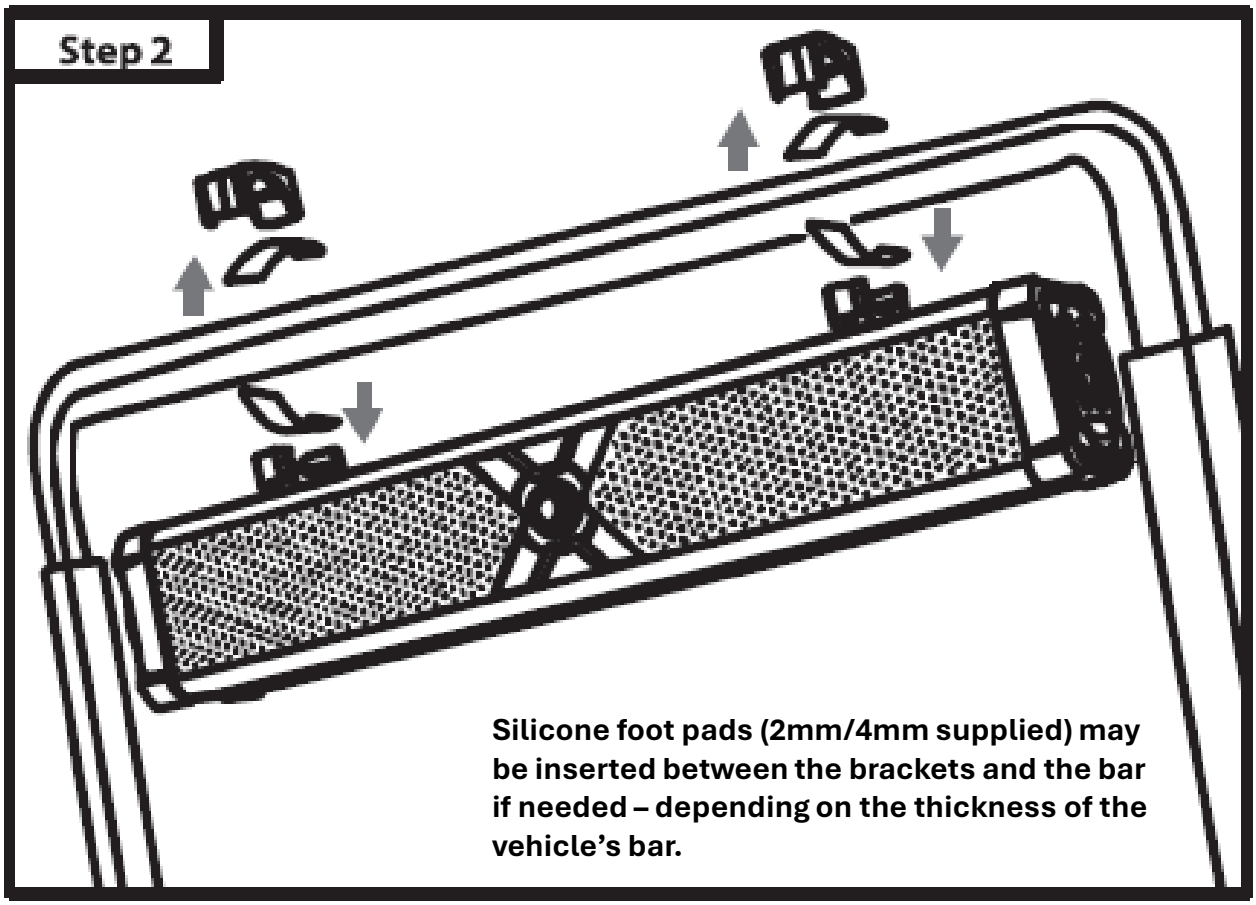

Installation Instructions

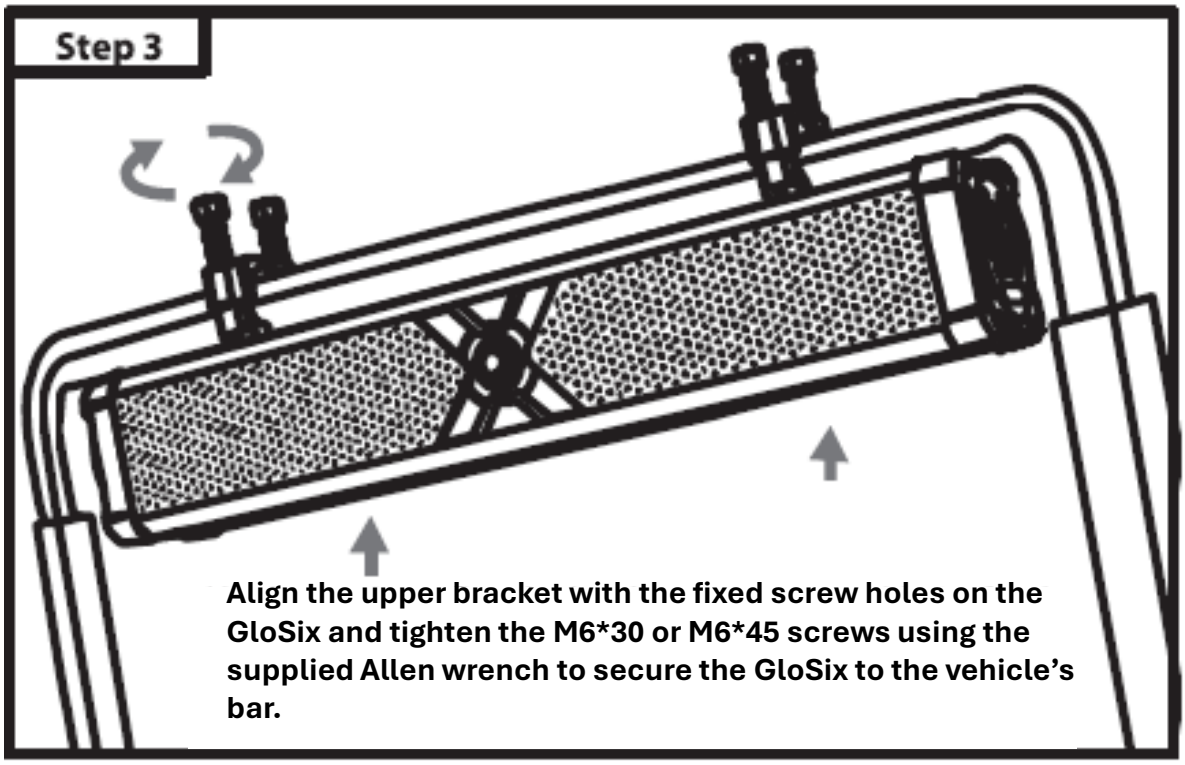

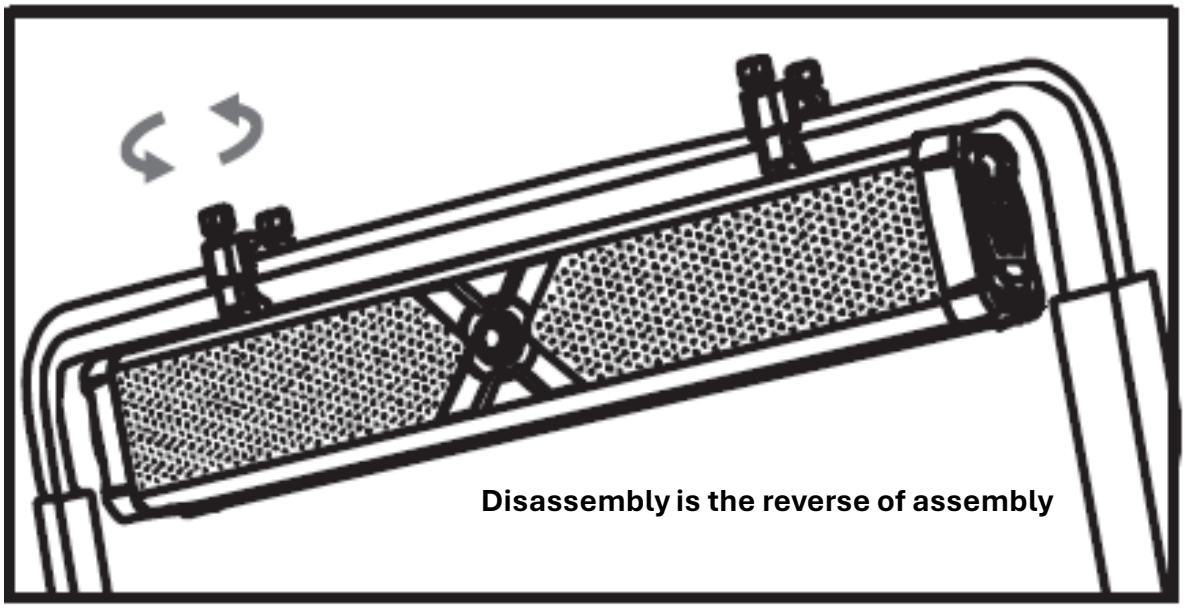

Power Wiring Instructions

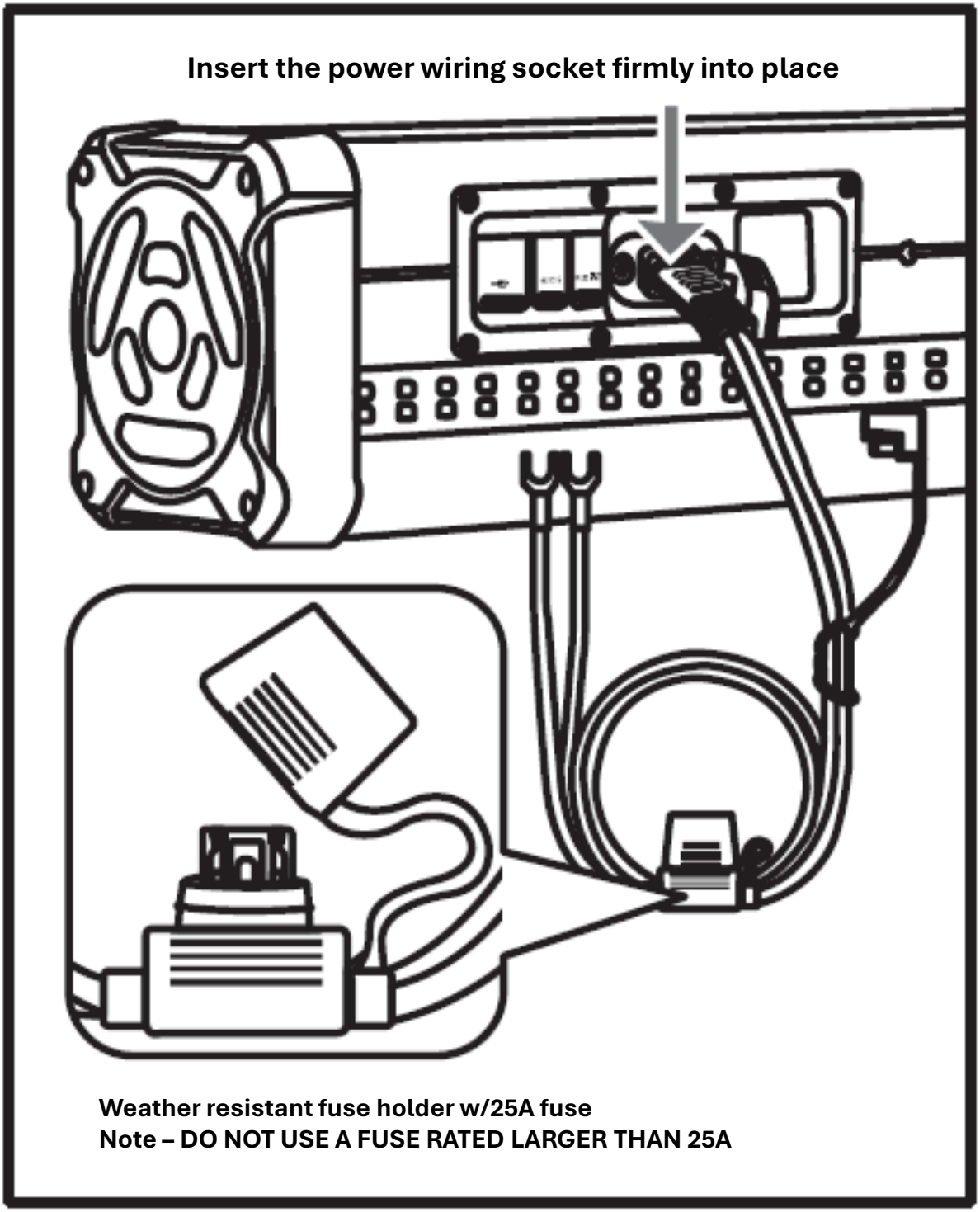

Power Wiring Instructions

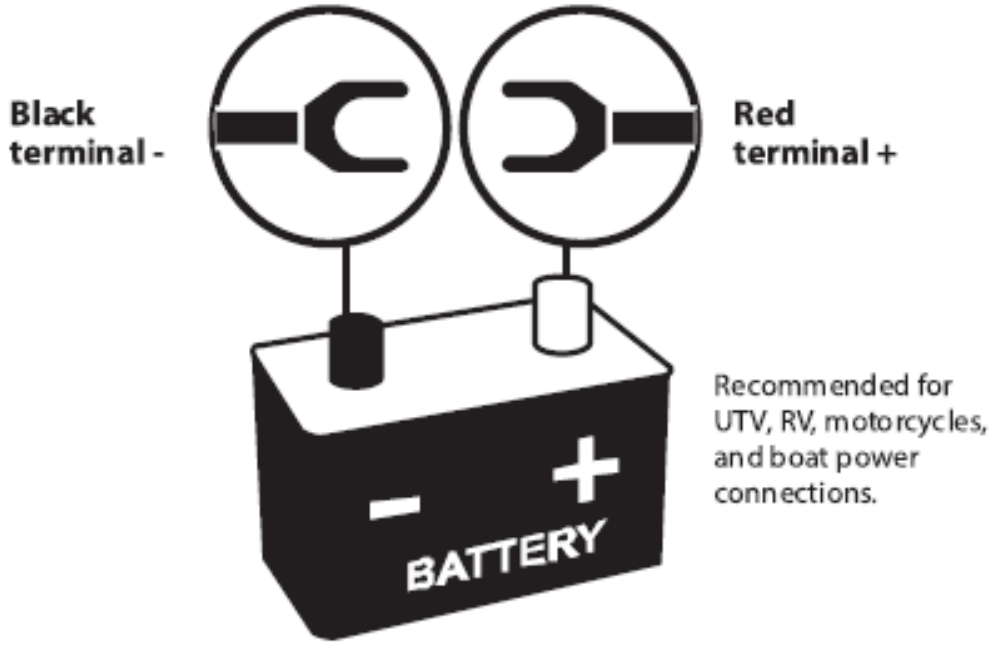

Power Wiring and Signal Connection Instructions

- **Red Wire:** This is the main power wire and should be connected directly to the positive terminal of the 12V battery. Connection directly to the battery will maximize current flow and ensure best performance.
- **Black Ground Wire:** This is the negative power wire and should be connected directly to the negative terminal of the 12V battery. If the installation is in a vehicle with a chassis, an alternative would be to affix this wire to a clean & paint free place on the chassis. Use a screw or a bolt with a star washer to ensure the best connection.
- **AUX IN Input:** This is designed to accept an audio input from a source unit producing 250mV to 2 volts of audio output.
- **AUX OUT Output:** This has a max output of 2V and may be used to drive an external amplifier or an additional GloSix. This is a full range variable output that is controlled by the GloSix main volume control.

Product Parameters

Model Names	GP-RGB-SBAR GP-BT
RMS Power (Watts)	250W
Peak Power (Watts)	500W
AUX Input Sensitivity	250mV - 2Volts
AUX Output	2Volts max
Input Voltage	DC12V (9.6V - 16V allowable range)
Input Current	25A (10A - 25A allowable Range)
Frequency Response	45Hz - 22kHz
Signal/Noise Ratio	>85dB
Total Harmonic Distortion (THD)	< 1%
USB-A Port Format	MP3, WMA, WAV Files
Bluetooth Frequency	2.4GHz
Bluetooth Protocol	V5.3
Speaker Specifications	Mid/Low: 95mm, 60W 4Ω Midrange: 78mm, 40W/4 Ω Tweeter: 40mm, 25W/8Ω
Product Dimensions	723.8mm x 128.9mm x 131.8mm
Product Weight	7.23kg

Frequently Asked Questions

- **What battery specifications should I be using to power my GloSix?**
  - Alpine recommends a 12V battery – either lead acid or lithium that can supply a minimum of 10A. Note: If the battery capacity falls below9.6V, it will affect the audio performance of the GloSix.
- **Why is the playback intermittent or noisy?**
  - In an unobstructed environment, the range of Bluetooth is normally around 15m (about 50 ft). So, if using the BT connection make sure to have the phone no farther than that distance from the GloSix.
- **My GloSix is not connecting to a previously paired phone.**
  - Try deleting the GloSix from the phone's Bluetooth device list, then re-pair manually and re-connect.
- **My GloSix is not powering on, or it is frozen.**
  - Check if the power connection is supplying 12v to the GloSix, both at the battery of the vehicle and at the point where the power cable inserts into the GloSix. Also check the fuse & replace if necessary. If everything above is OK, unplug the power connection from the back of the GloSix, wait 10 seconds and plug it back in. Then press and hold the power button for more than 5 seconds to reset
- **Who can help me if I still have questions?**
  - Alpine Tech Support is available by phone at **1-800-TECH-101**
  - Visit the dealer locator at www.alpine-usa.com to find an authorized Alpine dealer close to you.

Usage Notes and Safe Volume Settings

1. Please read this manual carefully before use and refer back to it for future reference.
2. Before installation, be sure to check the polarity and voltage of the battery in the vehicle. The GloSix is designed exclusively for 12V batteries with a negative ground. Use of any other battery or power supply could damage the GloSix or the vehicle's electrical system.
3. Do not use the GloSix in extremely hot or cold environments. If used outside the range of -10◦C/14◦F to 45◦C/113◦F, the performance will be affected negatively.
4. Listening to music at high volume may cause hearing damage. The sound pressure level of this product may cause hearing loss in normal humans, even if only temporarily. Sound can be deceptive, and your perception of "appropriate" sound levels may change over time. The perceived "appropriate" sound level may actually be louder than you realize. Therefore, before adapting to a sound level that could be inappropriate and damaging to your hearing, set the volume at a safe level and only change it carefully. Start with the volume at a lower level and increase the volume until you hear a clear sound image and appropriate bass without distortion.
5. Do not immerse the GloSix in water. It is water resistant (IPX6) but not designed for underwater use.
6. Recommended storage environment temperature is -5◦C/23◦F to 35◦C/95◦F. Maximum ambient temperature should not exceed 45◦C/113◦F.

Federal Communications Commission (FCC) Statement

This device complies with part 15 of the FCC Rules. Operation is subject to the following two conditions: (1) This device may not cause harmful interference, and (2) this device must accept any interference received, including interference that may cause undesired operation. Note: This equipment has been tested and found to comply with the limits for a Class B digital device, pursuant to part 15 of the FCC Rules. These limits are designed to provide reasonable protection against harmful interference in a residential installation. This equipment generates, uses and can radiate radio frequency energy and, if not installed and used in accordance with the instructions, may cause harmful interference to radio communications. However, there is no guarantee that interference will not occur in a particular installation. If this equipment does cause harmful interference to radio or television reception, which can be determined by turning the equipment off and on, the user is encouraged to try to correct the interference by one or more of the following measures:

●Reorient or relocate the receiving antenna.

●Increase the separation between the equipment and receiver.

●Connect the equipment into an outlet on a circuit different from that to which the receiver is connected.

●Consult the dealer or an experienced radio/TV technician for help. **Warning:** Changes or modifications not expressly approved by the party responsible for compliance could void the user's authority to operate the equipment.

Note: The manufacturer is not responsible for any radio or TV interference caused by unauthorized modifications to this equipment. Such modifications could void the user's authority to operate the equipment.

RF exposure statement:

The transmitter must not be collocated or operated in conjunction with any other antenna or transmitter. This equipment complies with the FCC RF radiation exposure limits set forth for an uncontrolled environment. This equipment should be installed and operated with a Minimum distance of 20cm between the radiator and any part of your body.

ISED Statement

This device contains licence-exempt transmitter(s)/receiver(s) that comply with Innovation, Science and Economic Development Canada's licence-exempt RSS(s).
Operation is subject to the following two conditions:

1. This device may not cause interference.
2. This device must accept any interference, including interference that may cause undesired operation of the device.

Déclaration ise

Cet appareil contient des émetteurs/récepteurs exemptés de licence qui sont conformes aux RSS exemptés de licence d'innovation, sciences et développement économique Canada. Le fonctionnement est soumis aux deux conditions suivantes:

1. Cet appareil ne peut pas causer d'interférences.
2. Cet appareil doit accepter toute interférence, y compris les interférences qui peuvent causer un fonctionnement indésirable de l'appareil.

For Receiver:

This device meets the exemption from the routine evaluation limits in section 6.6 of RSS 102 and compliance with RSS 102 RF exposure, users can obtain Canadian information on RF exposure and compliance.
Cet appareil satisfait à l'exemption des limites d'évaluation de routine de la section 6.6 du RSS 102 et conformité au RSS 102 exposition aux RF. Les utilisateurs peuvent obtenir de l'information canadienne sur l'exposition aux RF et la conformité.

This equipment complies with Canada radiation exposure limits set forth for an uncontrolled environment. The device is installed and operated without restriction.
Cet équipement est conforme Canada limites d'exposition aux radiations dans un environnement non contrôlé. Die Installation und der Betrieb der Ausrüstung sind uneingeschränkt.

For Transmitter:

This device meets the exemption from the routine evaluation limits in section 6.6 of RSS 102 and compliance with RSS 102 RF exposure, users can obtain Canadian information on RF exposure and compliance.The transmitter must not be colocated or operated in conjunction with any other antenna or transmitter.This equipment should be installed and operated with a Minimum distance of 20cm between the radiator and any part of your body. Cet appareil satisfait à l'exemption des limites d'évaluation de routine de la section 6.6 du RSS 102et conformité au RSS 102 exposition aux RF. Les utilisateurs peuvent obtenir de l'information canadienne sur l'exposition aux RF et la conformité. L'émetteur ne doit pas être localisé ou utilisé conjointement avec une autre antenne ou un autre émetteur. Cet équipement doit être installé et utilisé à une distance minimale de 20cm entre le radiateur et n'importe quelle partie de votre corps.

RoHS

MADE IN CHINA