PRORUN®

60V LITHIUM-ION

OPERATOR'S MANUAL

CORDLESS SINGLE-STAGE SNOW THROWER

MODEL: PSB160SS

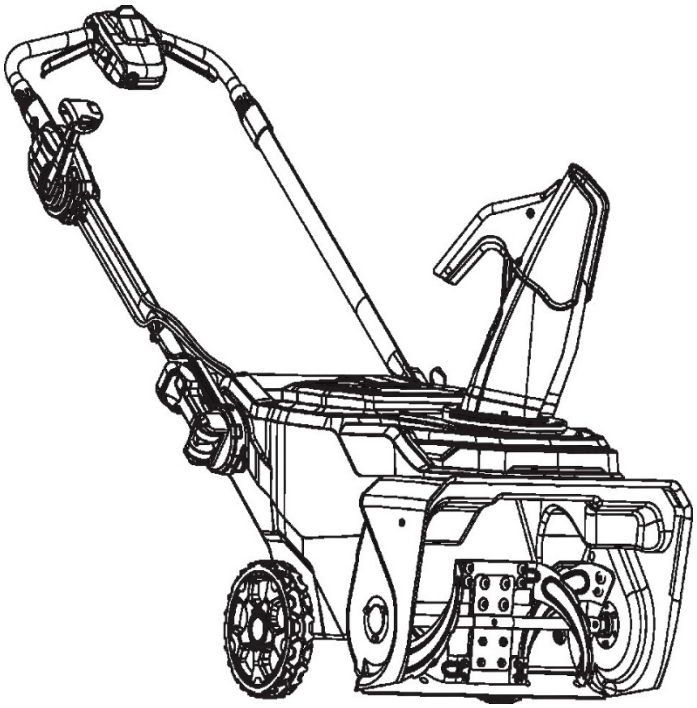

Everything PRORUN

Before using, read the instructions.

⚠ **IMPORTANT – READ CAREFULLY BEFORE USE.**

⚠ **IMPORTANT SAFETY INSTRUCTIONS – SAVE THESE INSTRUCTIONS**

WARNING: To reduce the risk of injury, the user must read and understand the User manual before using this product. Keep these instructions for future reference.

Please let us know what you think. To leave a comment and see our complete product line,

Visit:

PRORUNTOOLS.COM ★★★★★

1-844-905-0882, info@proruntech.com

Version: A – Issue Date: 1/20/2026

1. PRODUCT SPECIFICATION

Model:

Model	PSB160SS
Moter Type	BLDC (Brushless DC Motor)
Voltage	DC 60V
IP Rating	IPX4

Mechanical Specifications

Maximum Spring Speed	**High**	**2000 r/min**
Moter Type	Low	1300 r/min
Working Width	21 inches (533 mm)	
Blade Diameter	7 inches (180 mm)	
Maximum Working Depth	8 inches (203 mm)	
Weight (Without Battery)	55.15 lbs (25 kg)	

Sound & Noise Data

According to IEC 62841-4-3	
Sound Pressure Level (LpA)	66.8 dB(A)
Noise Uncertainty (K)	3.0 dB(A)
Sound Power Level (LwA)	79.8 dB(A)
Noise Uncertainty (K)	3.0 dB(A)
According to Directive 2000/14/EC	
Declared Sound Power Level (Lw)	83 dB(A)

Vibration Data

According to IEC 62841-4-1	
Left Handle	1.11 m/s2
Right Handle	1.19 m/s2
Vibration Uncertainty (K)	1.5 m/s2

Battery & Charger

Charger (Model BC160-100)	
Input	AC 100-240 V, 50/60 Hz, 170 W
Output	DC 62.4 V, 2.6 A
Battery Options	
Model	PB16050-5.0 Ah
Model	PB160100-10.0 Ah
Rated Parameters	DC 54 V, 5.0 Ah or 10.0 Ah

The declared vibration total value(s) and the declared noise emission value(s) have been measured in accordance with a standard test method and may be used for comparing one tool with another.
The declared vibration total value(s) and the declared noise emission value(s) may also be used in a preliminary assessment of exposure.
The vibration and noise emissions during actual use of the power tool can differ from the declared values depending on the ways in which the tool is used, especially what kind of workpiece is processed. Wear hearing protection and protective gloves.

2. TABLE TO CONTENTS

1. PRODUCT SPECIFICATIONS 2
2. TABLE OF CONTENTS 3
3. IMPORTANT SAFETY INSTRUCTIONS 4
4. GENERAL MACHINE SAFETY WARNINGS 4
5. SYMBOLS 11
6. COMPONENTS AND CONTROLS 13
7. BATTERY & CHARGER OPERATION 14
8. ASSEMBLY INSTRUCTIONS 17
9. OPERATIONS 21
10. MAINTENANCE AND REPAIRS 23
11. TRANSPORTATION AND STORAGE 27
12. TROUBLESHOOTING 29
13. DISPOSAL 30
14. EXPLODED VIEWS AND PARTS LIST 31

3. IMPORTANT SAFETY INSTRUCTIONS

WARNING DEFINITIONS

This is the safety alert symbol. It is used to alert you to potential personal injury hazards. Obey all safety messages that follow this symbol to avoid possible injury or death.

⚠ **DANGER!**

Indicates a hazardous situation which, if not avoided, will result in death or serious injury.

⚠ **WARNING!**

Indicates a hazardous situation which, if not avoided, could result in death or serious injury.

⚠ **CAUTION!**

Indicates a hazardous situation which, if not avoided, could result in minor or moderate injury.

⚠ **NOTE:**

Addresses practices not related to personal injury.

SAVE THESE INSTRUCTIONS

This manual contains important instructions that should be followed during setup, operation, and maintenance of the chainsaw.

4. GENERAL MACHINE SAFETY WARNINGS

⚠ **WARNING!**

Read all safety warnings, instructions, illustrations, and specifications provided with this machine.

Failure to follow the warnings and instructions may result in electric shock, fire, and/or serious injuries.

Save all warnings and instructions for future reference.

The term “machine” in all of the warnings listed below refers to your battery-operated (cordless) machine.

1. WORK AREA SAFETY

A. **Keep work area clean and well-lit.** Cluttered or dark areas invite accidents.
B. **Do not operate machines in explosive atmospheres, such as in the presence of flammable liquids, gases, or dust.** Machines create sparks that may ignite the dust or fumes.
C. **Keep children and bystanders away while operating a machine.** Distractions can cause you to lose control.

2. ELECTRICAL SAFETY

A. **Machine plugs must match the outlet. Never modify the plug in any way. Do not use any adapter plugs with earthed (grounded) machines.** Unmodified plugs and matching outlets will reduce the risk of electric shock.

B. **Avoid body contact with earthed or grounded surfaces such as pipes, radiators, ranges, and refrigerators.** There is an increased risk of electric shock if your body is earthed or grounded.
C. **Do not expose machines to rain or wet conditions.** Water entering a machine will increase the risk of electric shock.
D. **Do not abuse the cord. Never use the cord for carrying. Keep the cord away from heat, oil, sharp edges, or moving parts.** Damaged or entangled cords increase the risk of electric shock.

3. PERSONAL SAFETY

A. **Stay alert, watch what you are doing, and use common sense when operating a machine. Do not use a machine while you are tired or under the influence of drugs, alcohol, or medication.** A moment of inattention while operating machines may result in serious personal injury.
B. **Use personal protective equipment. Always wear eye protection.** Protective equipment, such as a dust mask, non-skid safety shoes, a hard hat, or hearing protection, used for appropriate conditions, will reduce personal injuries.
C. **Prevent unintentional starting. Ensure the switch is in the off-position before connecting to a power source and/or battery pack, picking up or carrying the machine.** Carrying machines with your finger on the switch or energizing machines that have the switch on invites accidents.
D. **Remove any adjusting key or wrench before turning the machine on.** A wrench or a key left attached to a rotating part of the machine may result in personal injury.
E. **Do not overreach. Keep proper footing and balance at all times.** This enables better control of the machine in unexpected situations.
F. **Dress properly. Do not wear loose clothing or jewelry. Keep your hair, clothing, and gloves away from moving parts.** Loose clothes, jewelry, or long hair can be caught in moving parts.
G. **If devices are provided for the connection of dust extraction and collection facilities, ensure these are connected and properly used.** Use of these devices can reduce dust-related hazards.
H. **Do not let familiarity gained from frequent use of tools allow you to become complacent and ignore tool safety principles.** A careless action can cause severe injury within a fraction of a second.

4. MACHINE USE AND CARE

A. **Do not force the machine. Use the correct machine for your application.** The correct machine will do the job better and safer at the rate for which it was designed.
B. **Do not use the machine if the switch does not turn it on and off.** Any machine that cannot be controlled with the switch is dangerous and must be repaired.
C. **Remove the battery pack from the machine before making any adjustments, changing accessories, or storing machines.** Such preventive safety measures reduce the risk of starting the power tool accidentally.
D. **Store idle machines out of the reach of children and do not allow persons unfamiliar with the machine or these instructions to operate the machine.** Machines are dangerous in the hands of untrained users.

E. **Maintain machines and accessories. Check for misalignment or binding of moving parts, breakage of parts, and any other condition that may affect the machine's operation. If damaged, have the machine repaired before use.** Many accidents are caused by poorly maintained machines.
F. **Keep cutting tools sharp and clean.** Properly maintained cutting tools with sharp cutting edges are less likely to bind and are easier to control.
G. **Use the machine, accessories, and tool bits, etc., in accordance with these instructions, taking into account the working conditions and the work to be performed.** Use of the machine for operations different from those intended could result in a hazardous situation.
H. **Keep handles and grasping surfaces dry, clean, and free from oil and grease.** Slippery handles and grasping surfaces do not allow for safe handling and control of the tool in unexpected situations.

5. BATTERY TOOL USE AND CARE

A. **Recharge only with the charger specified by the manufacturer.** A charger that is suitable for one type of battery pack may create a risk of fire when used with another battery pack.
B. **Use machines only with specifically designated battery packs.** Use of any other battery packs may create a risk of injury and fire.
C. **When the battery pack is not in use, keep it away from other metal objects, like paper clips, coins, keys, nails, screws, or other small metal objects, that can make a connection from one terminal to another.** Shorting the battery terminals together may cause burns or a fire.
D. **Under abusive conditions, liquid may be ejected from the battery; avoid contact. If contact accidentally occurs, flush with water. If liquid contacts the eyes, additionally seek medical help.** Liquid ejected from the battery may cause irritation or burns.
E. **Do not use a battery pack or tool that is damaged or modified.** Damaged or modified batteries may exhibit unpredictable behavior, resulting in fire, explosion, or risk of injury.
F. **Do not expose a battery pack or tool to fire or excessive temperature.** Exposure to fire or temperature above 130 °C may cause an explosion.
G. **Follow all charging instructions and do not charge the battery pack or tool outside the temperature range specified in the instructions.** Charging improperly or at temperatures outside the specified range may damage the battery and increase the risk of fire.

6. SERVICE

A. **Have your power tool serviced by a qualified repair person using only identical replacement parts.** This will ensure that the safety of the power tool is maintained.
B. **The service never damaged battery packs.** Service of battery packs should only be performed by the manufacturer or authorized service providers.

SAFE OPERATION PRACTICES FOR PEDESTRIAN-CONTROLLED SNOW THROWERS

1. GENERAL

This machine is capable of amputating hands and feet and throwing objects. Failure to observe the following safety instructions could result in serious injury.

2. TRAINING

A. Read, understand, and follow all instructions on the machine and in the manual(s) before operating this unit. Be thoroughly familiar with the controls and the proper use of the machine. Know how to stop the unit and disengage the controls quickly.

B. Never allow children to operate the machine. Never allow adults to operate the machine without proper instruction.

C. Keep the area of operation clear of all people, particularly small children.

D. Exercise caution to avoid slipping or falling, especially when operating the machine in reverse.

3. PREPARATION

A. Thoroughly inspect the area where the machine is to be used and remove all doormats, sleds, boards, wires, and other foreign objects.

B. Disengage all the clutches and shift into neutral before starting the motor.

C. Do not operate the machine without wearing adequate winter garments. Avoid loose-fitting clothing that can get caught in moving parts. Wear footwear that will improve footing on slippery surfaces.

D. Always wear safety glasses or eye shields during operation or while performing an adjustment or repair to protect eyes from foreign objects that may be thrown from the machine.

E. Adjust the collector housing height to clear the gravel or crushed rock surface.

F. Never attempt to make any adjustments while the motor is running (except when specifically recommended by the manufacturer).

4. OPERATION

A. Do not put hands or feet near or under rotating parts. Keep clear of the discharge opening at all times.

B. Exercise extreme caution when operating on or crossing gravel drives or walks. Stay alert for hidden hazards or operating near public roads.

C. After striking a foreign object, stop the motor, remove the battery from the machine, thoroughly inspect the snow thrower for any damage, and repair the damage before restarting and operating the snow thrower.

D. If the machine should start to vibrate abnormally, stop the motor and check immediately for the cause. Vibration is generally a warning of trouble.

E. Stop the motor whenever you leave the operating position, before unclogging the collector/impeller housing or discharge chute, and when making any repairs, adjustments, or inspections.

F. Exercise extreme caution when operating on slopes.

G. Never operate the machine without proper guards and other safety protective devices in place and working.

H. Never direct the discharge toward people or areas where property damage can occur. Keep children and others away.
I. Do not overload the machine capacity by attempting to clear snow at too fast a rate.
J. Disengage the power to the collector/impeller when the machine is transported or not in use.
K. Use only attachments and accessories approved by the manufacturer of the machine (such as wheel weights, counterweights, or cabs).
L. Never operate the machine without good visibility or light. Always be sure of your footing, and keep a firm hold on the handles. Walk; never run.
M. Hand contact with the rotating impeller inside the discharge chute is the most common cause of injury associated with snow throwers. Never use your hand to clean out the discharge chute.
N. To clear the chute:
  A. SWITCH OFF THE MOTOR! Remove the batteries.
  B. Wait 10 seconds to be sure the impeller blades have stopped rotating.
  C. Always use a clean-out tool, not your hands.

5. MAINTENANCE AND STORAGE

A. Check shear bolts and other bolts at frequent intervals for proper tightness to be sure the equipment is in a safe working condition.
B. Always refer to the instruction handbook for important details if the snow thrower is to be stored for an extended period.
C. Maintain or replace safety labels, as necessary.
D. Run the machine a few minutes after throwing snow to prevent freeze-up of the collector/impeller.
E. When cleaning, repairing, or inspecting the snow thrower, stop the motor and make certain the collector/impeller and all moving parts have stopped. Remove the batteries from the machine to prevent someone from accidentally starting the engine.

BATTERY AND BATTERY CHARGER

This section describes the battery and battery charger safety for your battery product.
Only use original batteries for products and only charge them in an original battery charger.

1. BATTERY CHARGER

The battery chargers are only used for fast charging of PRORUN replacement batteries. This manual contains important safety and operating instructions for battery chargers.
Before using the battery charger, read all instructions and cautionary markings on the battery charger and the product using the battery.

⚠ **CAUTION!**
Charge only Li-ion batteries recommended by the manufacturer.
Other types of batteries may burst, causing personal injury and damage.

⚠ **CAUTION!**
If the shape of the plug does not fit the power outlet, use an attachment plug adapter of the proper configuration for the power outlet.

⚠ **WARNING!**

Minimize the risk of electric shock or short circuit as follows:

- Never insert any object into the charger's cooling slots.
- Do not try to dismantle the battery charger.
- Never connect the charger terminals to metal objects, as this can short-circuit the battery charger.
- Use approved and intact wall sockets.

⚠ **WARNING!**

This machine produces an electromagnetic field during operation.

This field may, under some circumstances, interfere with active or passive medical implants. To reduce the risk of serious or fatal injury, we recommend that people with medical implants consult their physician and the medical implant manufacturer before operating this machine. Do not use the product when a thunderstorm is approaching.

- Unplug the charger from the wall outlet before inspecting or cleaning the charger.
- Regularly check that the battery charger connection wire is intact and that there are no cracks in it. Replace the charger if the power supply cord becomes worn or damaged. The power supply cord cannot be repaired or replaced.
- Never carry the battery charger using the cord, and never pull out the plug by pulling the cord.
- Keep all cords and extension cords away from water, oil, and sharp edges. Make sure the cord is not pinched in doors, fences, or the like.
- Otherwise, it can cause the object to become alive.
- Never clean the battery or the battery charger with water.
- Never allow the children to use the battery charger.
- When charging, the charger must be placed in a well-ventilated area and under a roof to keep out moisture.

⚠ **WARNING!**

Do not charge non-rechargeable batteries in the battery charger or use them in the machine.

⚠ **WARNING!**

Do not use the battery charger close to corrosive or flammable materials. Do not cover the battery charger.

- Pull out the plug to the battery charger in the event of smoke or fire. Risk of fire.
- Use the battery charger only when the surrounding temperature is between 41 °F (5 °C) and 113 °F (45 °C). Use the charger in an environment that is well ventilated, dry, and free from dust.

Do not use:

- A faulty or damaged battery charger
- The battery in the battery charger is outdoors.

Do not charge:

- Or never use a faulty, damaged, or deformed battery.
- The battery in the rain or in wet conditions.
- The battery in direct sunlight.
- The battery in the battery charger is outdoors.

2. BATTERY

⚠ **CAUTION!**

Use only Li-ion batteries recommended by manufacturer.

Other types of batteries may burst, causing personal injury and damage.

- Do not dismantle, open, or shred secondary batteries.
- Keep batteries out of the reach of children.
- Do not expose batteries to heat or fire. Avoid storage in direct sunlight.
- Do not short-circuit a battery.
- Do not store batteries haphazardly in a box or drawer where they may short-circuit each other or be short-circuited by other metal objects.
- Do not remove a battery from its original packaging until required for use.
- Do not subject batteries to mechanical shock.
- In the event of a cell leaking, do not allow the liquid to come in contact with the skin or eyes. If contact has been made, wash the affected area with copious amounts of water and seek medical advice.
- Do not use any charger other than that specifically provided for use with the equipment.
- Do not use any battery that is not designed for use with the equipment.
- Always purchase the battery recommended by the device manufacturer for the equipment.
- Keep batteries clean and dry.
- Wipe the battery terminals with a clean, dry cloth if they become dirty.
- Secondary batteries need to be charged before each use. Always use the correct charger and refer to the manufacturer's instructions or equipment manual for proper charging instructions.
- Do not leave the battery on prolonged charge when not in use.
- After extended periods of storage, it may be necessary to charge and discharge the batteries several times to obtain maximum performance.
- Retain the original product literature for future reference.
- Use the battery only in the application for which it was intended.
- When possible, remove the battery from the equipment when not in use.
- Dispose of properly.

5. SYMBOLS

This page depicts and describes safety symbols that may appear on this product. Read, understand, and follow all the instructions on the machine before attempting to assemble and operate it.

SYMBOL	SIGNIFICATION
	**Safety Alert** Because a snow thrower is a high-speed cutting tool, special safety precautions must be observed to reduce the risk of personal injury.
	**Read the User's Manual** It is important that you read, fully understand, and observe the following safety precautions and warnings. Read the instruction manual and the safety precautions periodically.
	**Do Not Expose to Rain** Protect the tool, battery, and charger from rain, water, liquids, and damp conditions. Keep the tool, battery, and charger dry. Keep all people away from the work area whilst using it.
	**Beware of Thrown Objects** Watch out for thrown objects and ricochets to reduce the risk of serious or fatal injury to the operator or bystanders.
	**Keep Bystanders Away** Keep the area of operation clear of all people, particularly small children.
	**Steep Slope Hazard** Exercise extreme caution when operating on slopes.
	**Wear Eye and Ear Protection** To reduce the risk of injury to you, always wear safety goggles or safety glasses and sound barriers when operating this product.
	**Wear Protective Gloves** Always wear heavy-duty, nonslip gloves when handling the machine.
	**Wear Safety Footwear** Wear sturdy boots with nonslip soles. Never wear sandals, flip-flops, or go barefoot.
	**Remove the Battery** Disconnect or remove the battery before cleaning or maintenance.
	**Hand or Arm Entanglement** Do not touch or reach the collector/impeller to avoid the cutting or entanglement of the hand, arm, or upper torso.
	**Cutting or Entanglement of the Foot** Do not touch or reach into the collector/impeller to avoid the cutting or entanglement of your foot.
	**Never Touch Before Completely Stopping** Wait until all machine components have completely stopped before touching them.
	**Cutting Hazards** Do not touch or reach into the collector/impeller to avoid the cutting of fingers, hands, or feet.
	**Never Open or Remove Shields** Do not open or remove safety shields while the motor is running. Never operate the machine without proper guards and other safety protective devices in place and working.
	**Never Reach into Collector / Impeller** Hand contact with the rotating impeller inside the discharge chute will result in serious injury. Never reach into the collector/impeller while the motor is running.

	**Never Expose to Fire** Risk of fire, explosion, and/or burns, including chemical burns. Never incinerate or place the battery in or near fires, stoves, or other high-temperature locations.
	**Never Heat the Battery** Do not disassemble, crush, or heat above 212°F (100°C). Never expose the battery to high pressure.
	**Never Immerse in Water** To reduce the risk of personal injury or property damage from a short circuit, fire, or explosion. Never immerse the battery in water or other liquids.
	**Recycling** Take the machine, charger, accessories, and packaging to an approved disposal site for environmentally friendly recycling.
	**Waste** Symbols on the product or its packaging indicate that this product cannot be handled as domestic waste. This product must be deposited at an appropriate recycling facility.
	**Indoor Use Only** Use and store the charger only indoors in dry rooms.
	**Class II Tool** A battery charger belongs to Class II tools. It is intended for charging Li-ion batteries and having an output at a safety extra-low voltage.
	**Fuse** T3.15A time-lag miniature fuse-link
	**Alternating Current** Type of current
Li-Ion	**Lithium-ion Battery** Type of battery
	**Direct Current** Type of characteristic of the current

The following units may be used in this manual:

V	Volts	Voltage
A	Amperes	Current
Hz	Hertz	Frequency (cycles per second)
W	Watts	Power
Min	Minutes	Time
mm	Millimeters	Length or size
In.	Inch	Length or size
Kg	Kilogram	Weight
Lbs.	Pound	Weight
RPM	Revolutions per minute	Rotational speed

⚠ **DANGER!**

People with electronic devices, such as pacemakers, should consult their physician(s) before using this product. Operation of electrical equipment in close proximity to a heart pacemaker could cause interference or failure of the pacemaker.

6. KNOW YOUR MACHINE

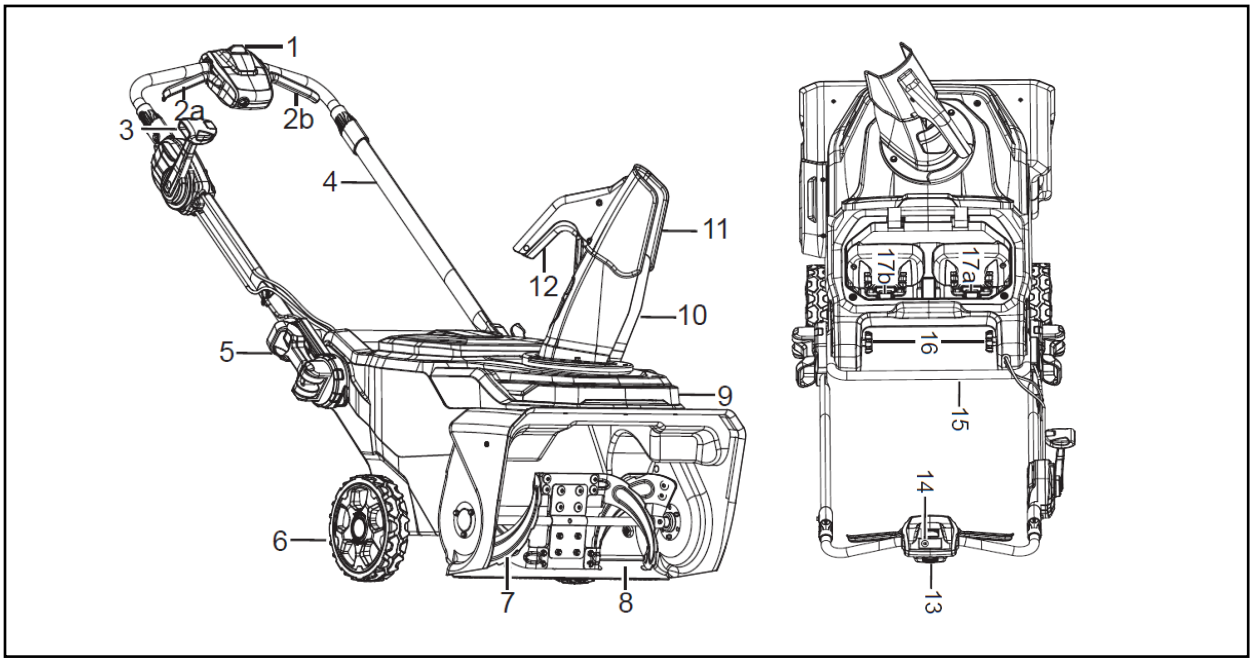

#	NAME	DESCRIPTION
1	Auger Drive Switch	Switches ON/OFF, preventing the Auger from starting unintentionally.
2	Power Switch Handle	Switches ON/OFF the power source.
3	Adjusting Handle	Adjusting the direction of the discharge chute.
4	Handlebar	Grasp and control the snow thrower.
5	Locking Handle	Locking the handlebars
6	Rear Wheels	4-inch high-strength plastic wheels
7	Auger	The moving parts of the snow thrower, which transport the snow out.
8	Scraper Bar	Scrape the snow on the ground flat.
9	LED Headlights	Used to illuminate the forward path in the dark.
10	Discharge Chute	Snow removal channel.
11	Chute Deflector	Changing the direction of snow discharge.
12	Chute Deflector Handle	Adjusting the direction of the chute deflector
13	Motor Speed Knob	Adjusts the motor speed.
14	Light Switch	Switches ON/OFF the light.
15	Lower Frame	Used to secure the handlebars
16	Lower Handle Knob	Used to secure the handlebars
17	Battery Release Buttons.	Secures the battery in the machine and releases it from the machine.

The safe use of this product requires an understanding of the information on the product and in this operator's manual, as well as a knowledge of the project you are attempting. Before using this product, familiarize yourself with all operating features and safety rules.

7. BATTERY AND CHARGER OPERATION

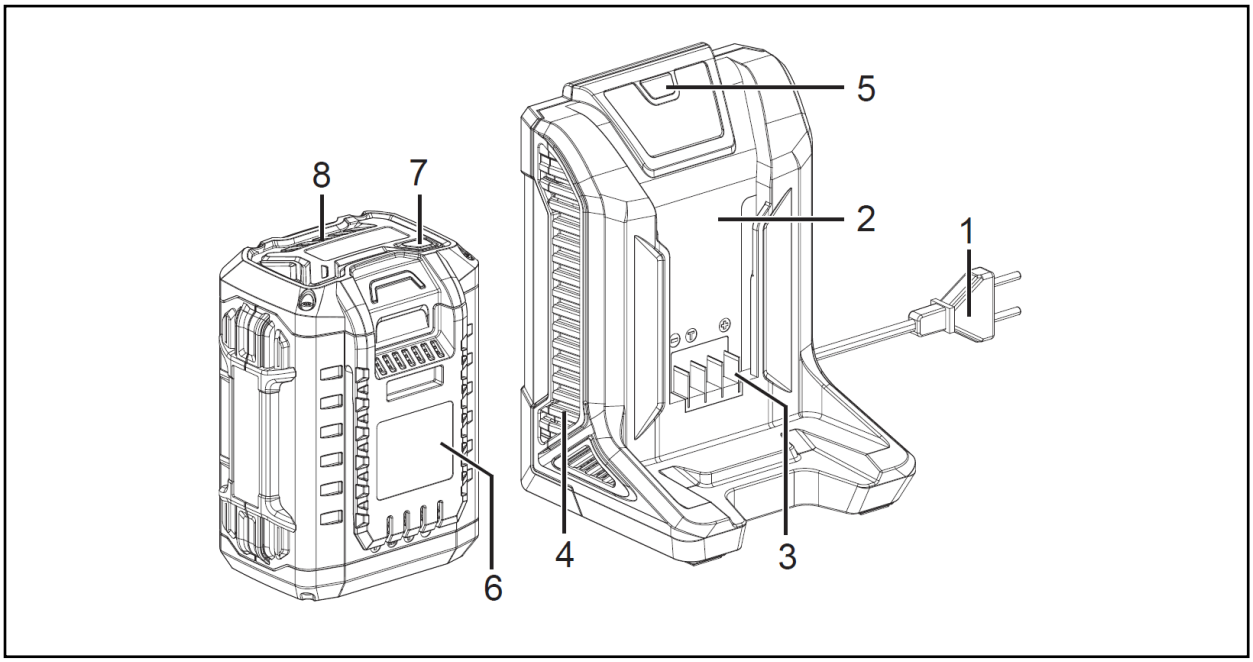

#	NAME
1	Electric Plug
2	Battery Charger
3	Electrical Terminal
4	Cooling Slots
5	Charger LED light
6	Battery
7	Electric Energy Button
8	Electric Energy LED light

⚠ **NOTE:**

The specifications of the plugs are inconsistent in different countries; the picture is only for reference, please make the object the standard.

⚠ **WARNING!**

Risk of electric shock and short circuiting. Use approved and intact wall sockets. Make sure that the power cord is not damaged. Replace the power cord if it appears to be damaged in any way.

1. CONNECT THE BATTERY

Connect the battery charger to the voltage and frequency specified on the rating plate. Put the electric plug in an earthed socket outlet. The charging LED light lit green in the first 5s, then the light will turn off if there is no battery in the charger.

2. CONNECT THE BATTERY TO THE BATTERY CHARGER

The battery must be charged before using it for the first time. The battery is only 30% charged when delivered.

⚠ **NOTE:**

During charging monitoring the charging process and never leave the battery in the charger When charging is complete.

Push the battery into the battery charger.



The Charger LED Light always flashes GREEN when the battery is charging.



The Charger LED Light always lights up if the battery is fully charged.



The battery will not be charged if the battery temperature is deviating. In that case, the LED light flashes red until the battery cools down or heats to normal temperature.



The battery will never be charged if it is damaged. In that case, the charger LED light always lit red.

- The electric energy is divided into 5 grades. If you want to check the electric energy of the battery, you need to press the electric energy button.
- When the battery is fully charged, the battery charger will stop charging (switch to stand by). There are no restrictions on how long a battery can remain in the charger. Recommended to remove the battery from the battery charger when the battery is fully charged, or the charger is disconnected from the supply.
- Pull out the plug. Never jerk the power supply cable to disconnect it from the wall socket.

3. MAINTENANCE

- Make sure the battery and battery charger are clean and that the terminals on the battery and the battery charger are always clean and dry before the battery is placed in the battery charger.
- Keep the battery-guided tracks clean. Clean plastic parts with a clean and dry cloth.

4. TRANSPORT AND STORAGE

- Store the equipment in a lockable area so that it is out of reach of children and unauthorized people.
- Store the battery and the battery charger in a dry, moisture-free, and frost-free space.
- Store the battery where the temperature is between 41 °F (5 °C) and 77 °F (25 °C) and never in direct sunlight.
- Store the battery charger only in an enclosed and dry space.
- Be sure to store the battery separately from the battery charger.

LED Display	Possible Faults	Possible Action
Charger LED flashing red.	The battery is ok, but temperature deviation.	Charge the battery in surroundings where the temperature is between 41 °F (5 °C) and 113 °F (45 °C). Wait for the battery to cool down.
Charger LED is always light red.	The Battery is damaged. The Charger is damaged.	Contact your service agent.

8. ASSEMBLY INSTRUCTIONS

1. UNPACKING

- Carefully remove the product and any accessories from the box. Make sure that all items listed in the packing list are included.
- Inspect the product carefully to make sure there is no damage during shipping.
- Do not discard the packing material until you have inspected and operated the product.

2. PACKING LIST

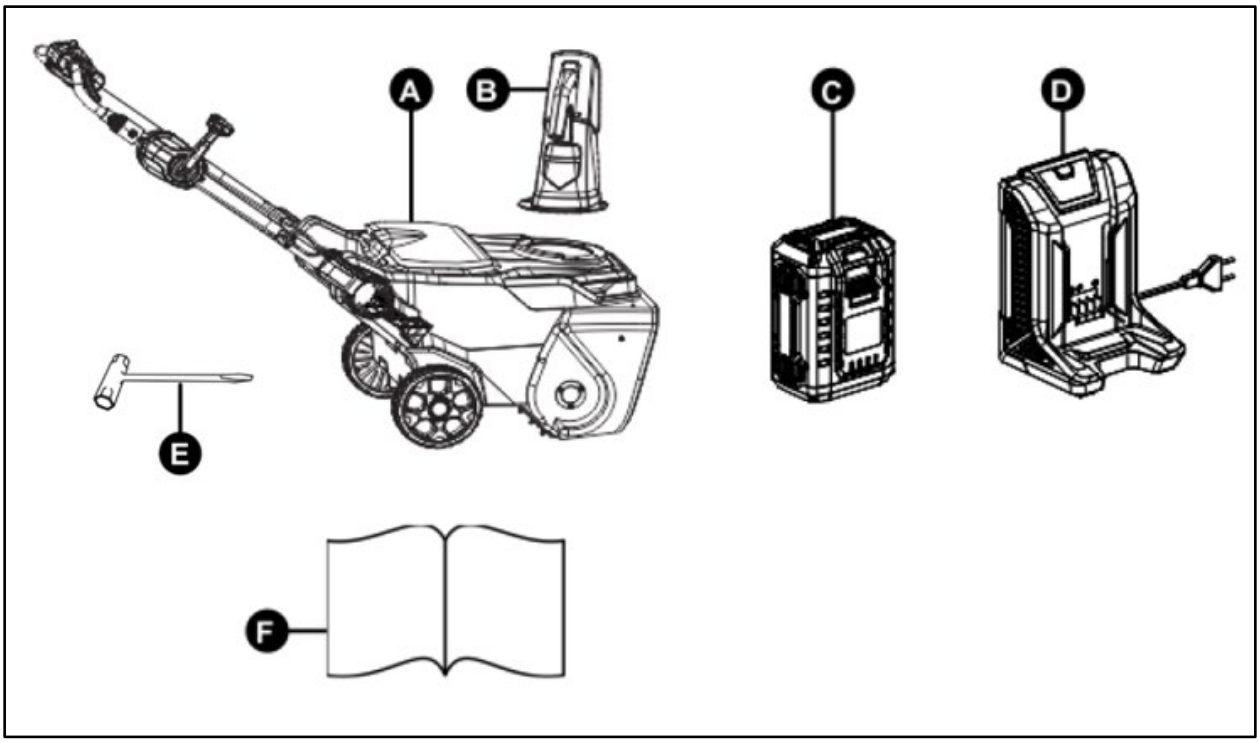

A	**Snow Thrower (Whole Machine)**
B	**Discharge Chute Assembly**
C	**Battery Charger**
D	**Battery**
E	**Spanner (Wrench)**
F	**Operator's Manual**

3. SETTING UP THE SNOW THROWER

1. While assembling, ensure it is assembled on a flat, firm surface.
2. Remove the connecting block that is inside the left arm of the handle (the side with the cable). Then insert the upper handle into the arms on both sides until the screw holes align. **Refer to (Figure 1A)**

3. Screw the handles into place. **Refer to (Figure 1B)**

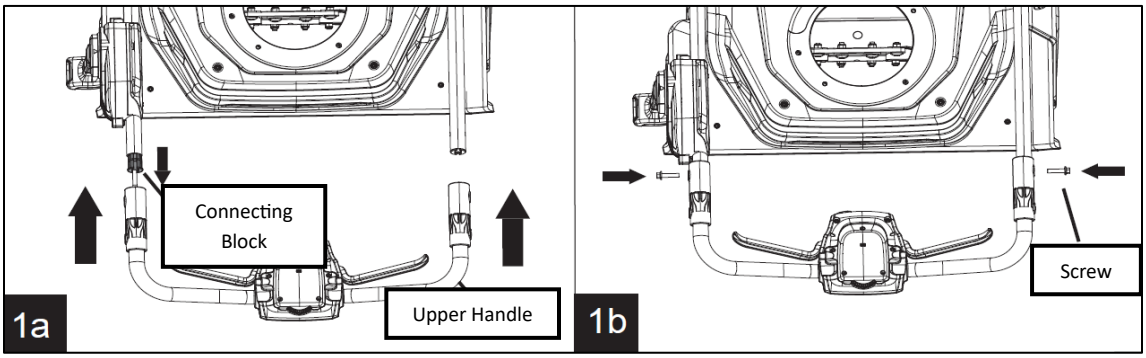

4. The snow thrower is packed in a folded position. Flip the handlebar **(4 Refer to (Page 13, Know your machine).** Over to the lower frame pin and insert it into the hole position of the handlebar. Fold and lock the locking handle **(5 Refer to (Page 13, Know your machine)** and then tighten the lower handle knob **(16). (Refer to Figure 1D.)**
5. Align the two slots on the discharge chute **(10)**, slide the discharge chute into place on the snow thrower, and finally tighten it into place with two screws. (**Refer to Figure 1E & 1F)**

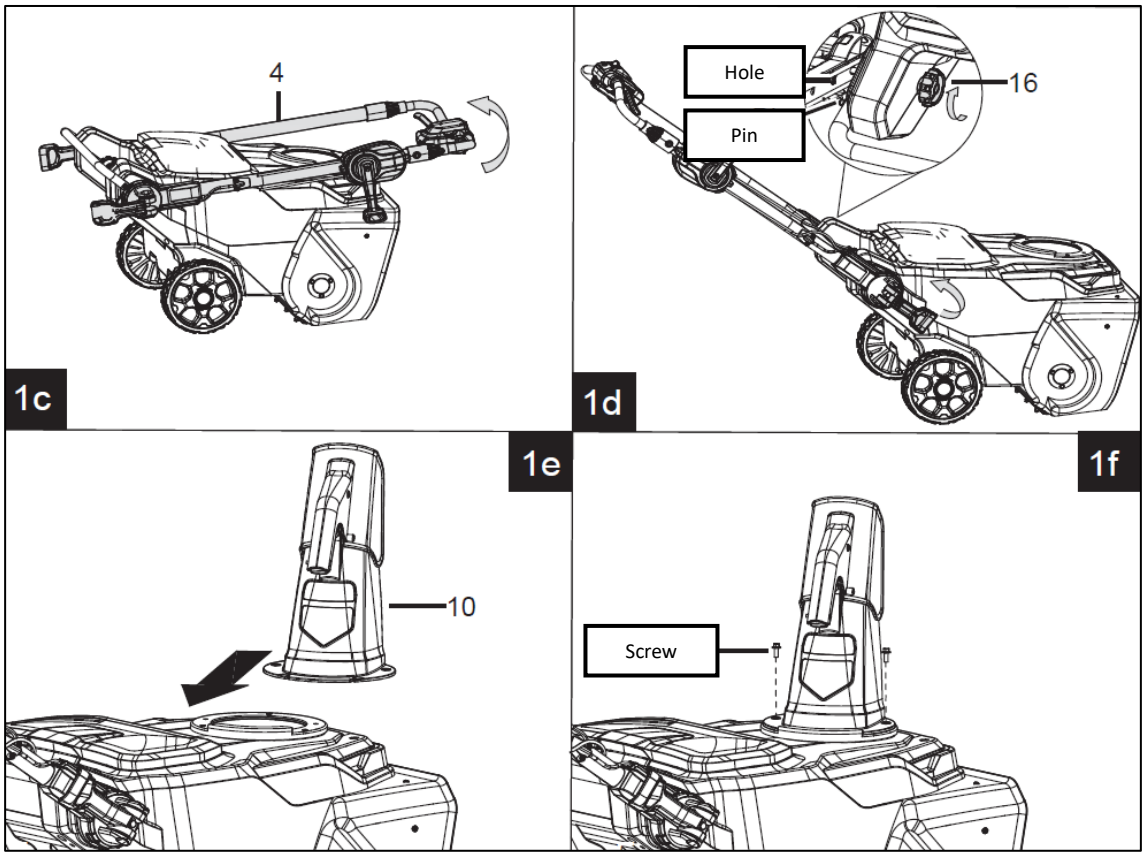

4. ADJUSTING THROW DIRECTION AND THROW HEIGHT

⚠ **WARNING!**

Never direct the discharge chute at the operator, at bystanders, at vehicles, or at nearby windows. The discharged snow and foreign objects accidentally picked up by the snow thrower can cause serious damage and personal injury. Always orient the discharge chute in

the opposite direction from where you, bystanders, surrounding vehicles, or windows are located.

1. The Discharge Chute **(10)** can be adjusted 180 degrees by pushing and pulling the Adjusting Handle **(3)**. Pushing the Adjusting Handle **(3)** forward will rotate the Discharge Chute **(10)** to the right, and pulling the Adjusting Handle **(3)** backward will move the Discharge Chute **(10)** to the left. **(Refer to Figure 2)**

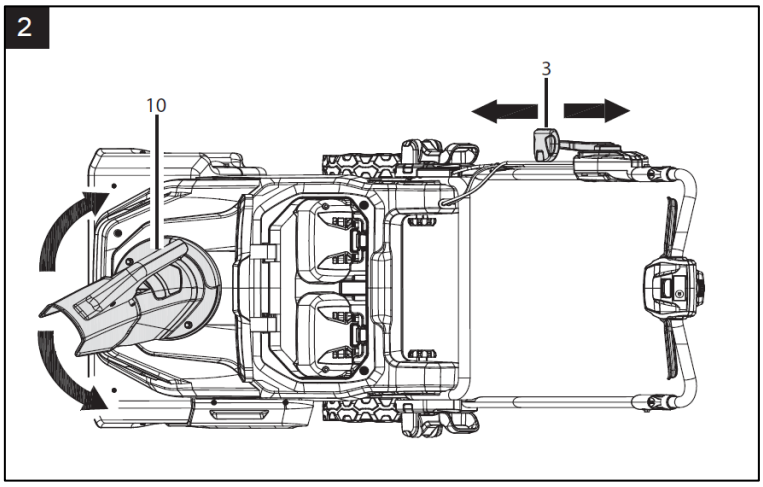

2. The Chute Deflector **(11)** on the top of the Discharge Chute **(10)** controls the height of the snow stream. Press the Discharge Chute Handle **(12)** to raise or lower the Chute Deflector **(11)** to the desired height and distance of snow you wish to throw. **(Refer to Figure 3)**

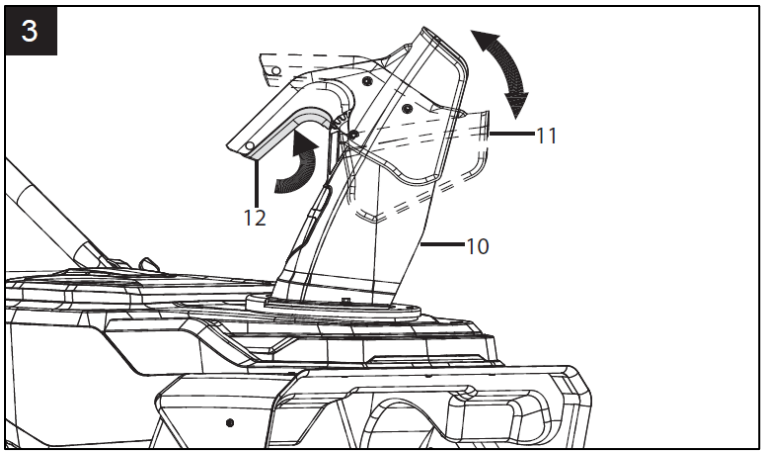

4. HEADLIGHTS

The snow thrower is equipped headlight that can be used to illuminate the forward path in the dark. To use the lights, turn on the light switch **(14)**. **(Refer to Figure 4)**

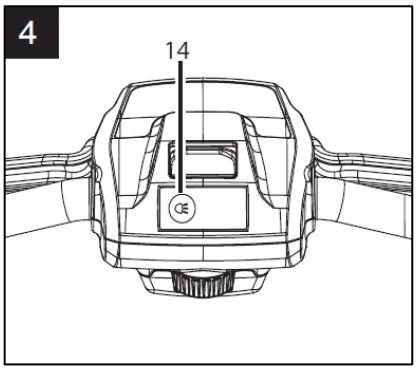

⚠ **NOTE:**

After finishing your work session, remember to turn off the light switch.

5. INSTALLING/REMOVING THE BATTERY PACK (Refer to Figure 5)

INSTALL THE BATTERY PACK:

Open the battery chamber cover **(a)** and insert the batteries **(b)**. Insert the battery pack into the bottom of the battery chamber until it clicks, and ensure that the battery pack is securely in place before operating the product. Close the battery chamber cover.

REMOVE THE BATTERY PACK:

Open the battery chamber cover. Depress the battery release buttons **(c)** and pull out **(d)** the battery simultaneously.

⚠ **WARNING!**

Make sure the battery pack is fully seated and secure in the battery chamber before beginning operation. Failure to securely seat the batteries could cause the batteries to fall out, resulting in serious personal injury or machine damage.

A battery can operate the mower. Using a second battery can achieve a longer operation time.

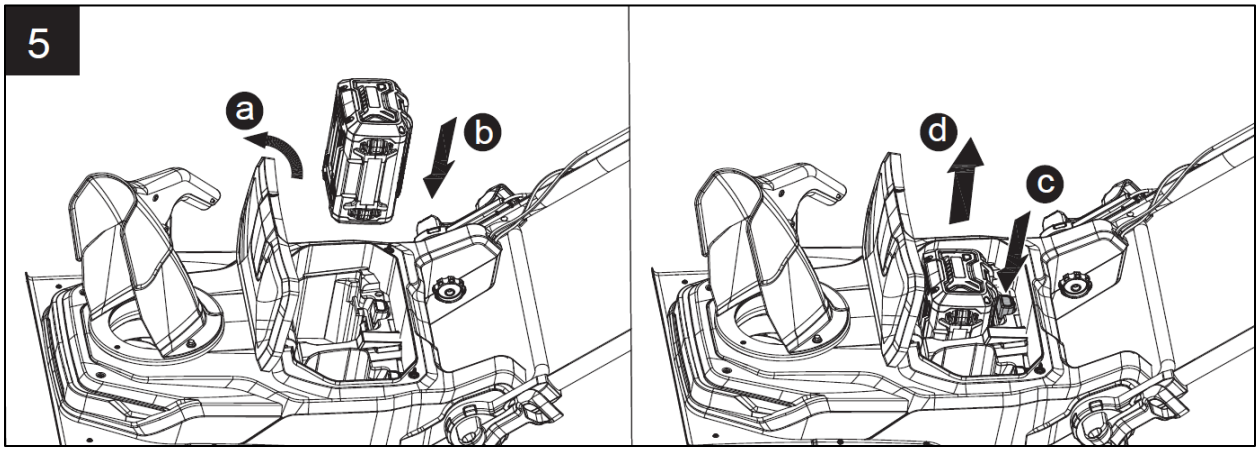

9. OPERATIONS

GENERAL WORKING INSTRUCTIONS

⚠ **WARNING!**

Read the "safety warning" and "safety instructions" sections at the beginning of this manual, including all text under subheadings therein, before using this product.

⚠ **WARNING!**

When the motor has been switched off, the auger may run for several additional seconds. Do not touch the auger.

- Daily inspection before use, do not use the machine if it is damaged or shows wear.
- Double-check that accessories and the attachment are properly fixed.
- Wear correct personal protective equipment to protect yourself from hidden objects that may be thrown from the cutting attachments.
- Check that handgrips and protection devices are clean and dry, correctly mounted, and well fastened to the machine; Always hold the machine by its handles.
- Ensure the area to be worked is clear of stones, sticks, wires, electrical lines, etc., or other objects that could damage the tool.
- The battery is not fully charged at the time of purchase. Charge the battery fully before using the product for the first time.

⚠ **WARNING!**

If you strike a foreign object, stop the motor, thoroughly inspect the snow thrower for any damage, and repair the damage before restarting and operating the snow thrower.

- Stop the machine immediately if you are disturbed while working by other people entering the working area.
- Do not overwork yourself. Take regular breaks to ensure that you can concentrate on the work and have full control over the machine.
- Understand the purpose and use of all safety equipment.
- The operator must pay extra attention to what is going on in the work area. Do not get distracted and always concentrate on the task.
- Keep the area of operation free of foreign objects that can become thrown by the auger.
- Perform a thorough inspection of the area since some objects may be hidden from view by surrounding snow. If the snow thrower hits an obstruction or picks up a foreign object during use, stop the snow thrower, remove the obstruction, and inspect the unit for damage. Repair or replace any damaged part before restarting and operating the unit.
- Keep children, pets, and bystanders away from the area of operation. Be aware that the normal noise of the machine while running may make it difficult for you to hear approaching people.
- When moving the snow thrower, use the wheels on one side as the pivot point. Slightly tilt the snow thrower on this pivot point to move it forward or backward.
- Note the direction of the wind. If possible, move in the same direction as the wind so that the snow is not thrown against the wind (and thus back into your face and onto the just cleared path).
- Do not push the snow thrower with excessive force. You should push the machine gently and evenly in accordance with the unit's throw rate.

- Some parts of the snow thrower may freeze under extreme temperature conditions.
- Do not attempt to operate the snow thrower with frozen parts. If the parts freeze while the snow thrower is in use, stop the snow thrower and inspect frozen parts. Free all parts of ice before restarting or operating the snow thrower. Never force controls that have frozen.
- When working on pebbles, gravel, or unpaved surfaces, avoid throwing loose surface material along with the snow by pushing down on the handle to raise the scraper bar at the base of the unit above the pebbles or gravel.

1. POWER ON THE SNOW THROWER

Push the power switch handle **(2)** in the direction of the handlebar **(4)**. The mower is powered on. **(Refer to Figure 6)**

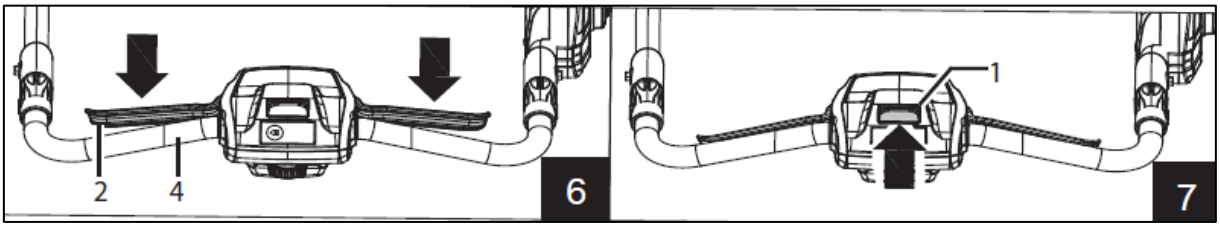

TO START THE AUGER

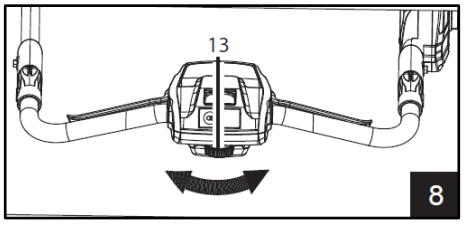

- Push the auger drive switch **(1)** forward to start the auger. Once the auger has started, you may release the auger drive switch. The auger will rotate all the way before the power switch handle is released. **(Refer to Figure 7)**
- The auger speed can be adjusted variously; turn the motor speed knob **(13)** right to increase the auger speed, turn it left to decrease the speed. **(Refer to Figure 8)**

TO STOP THE MACHINE

- Release the power switch handle to stop the auger and power off the machine. **(Refer to Figure 9)**

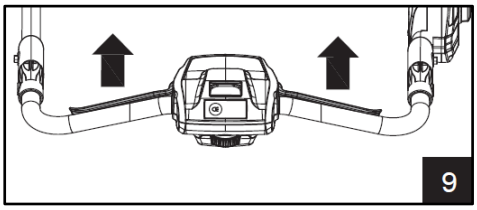

10. MAINTENANCE AND REPAIRS

⚠ **WARNING!**

Make sure to turn off the switch and remove the battery before performing any maintenance tasks on your snow thrower.

GENERAL INTRODUCTION

- Do not attempt to repair the machine unless you have the proper tools and instructions for disassembly and repair of the machine.
- Check bolts and screws at frequent intervals for proper tightness to ensure that the equipment is in safe working conditions.
- After each snow removal session, run the snow thrower for a few minutes to prevent the collector/impeller from freezing. Shut off the motor, wait for all revolving parts to stop completely, and wipe residual ice and snow off the unit. Rotate the chute crank several times to remove any excess snow.
- Only use a cloth soaked with hot water and a soft brush to clean the snow thrower; never wet or spray water on the machine!
- Do not use detergents or solvents, as these could cause irreparable damage to the snow thrower.
- Chemicals can destroy plastic parts.
- To protect the snow thrower from corrosion when storing for long periods, lightly oil the metal parts.
- Store the appliance in a dry area out of reach of children.
- For the user's safety, worn or damaged parts must be replaced. Replace with original replacement parts only. Parts from another snow thrower may not fit properly, causing an unsafe situation.

1. REPLACING THE SCRAPER BAR

The Scraper Bar **(8)** is located at the base of the snow thrower beneath the rotor housing.

1. Detach the worn Scraper Bar from the snow thrower by removing the five nuts and bolts that hold it in place.
2. Install the new Scraper Bar and refasten it securely to the snow thrower with the five nuts and bolts.
   (Refer to Figure 10)

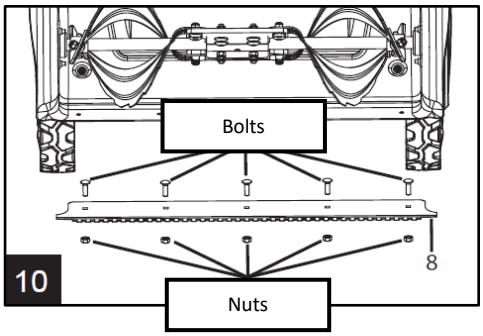

10

2. REPLACING THE BELT AND PULLEY

⚠ **NOTE:**

Determine the left and right-hand side of the snow thrower by standing behind the unit in the normal operating position.

1. Remove the screws from the left panel of the snow thrower and remove the left panel. **(Refer to Figure 11a)**
2. Remove the spring and lift the belt tension pulley, and roll the worn belt up and of big pulley from the top of the big pulley. **(Refer to Figure 11b)**
3. To replace the big pulley and remove the screw and washer from the middle of the pulley. While securing the auger so it does not spin, use a socket to turn the outer nut of the pulley anticlockwise. Once the old pulley is removed, replace the big pulley and tighten the outer nut clockwise with the socket. Replace and tighten the screw and washer. **(Refer to Figure 11c)**

⚠ **NOTE:**

Heavy wet snow puts a load on belts, thus requiring more frequent belt replacement.

4. To install the new belt, remove the spring and lift the belt tension pulley, and roll the new belt onto the small pulley at an angle. Then roll the belt onto the top of the big pulley by rotating the big pulley counterclockwise as the belt grips the top of the big pulley. After installing the belt, replace the spring. **(Refer to Figure 11d)**
5. Replace the left panel of the snow blower with all screws.

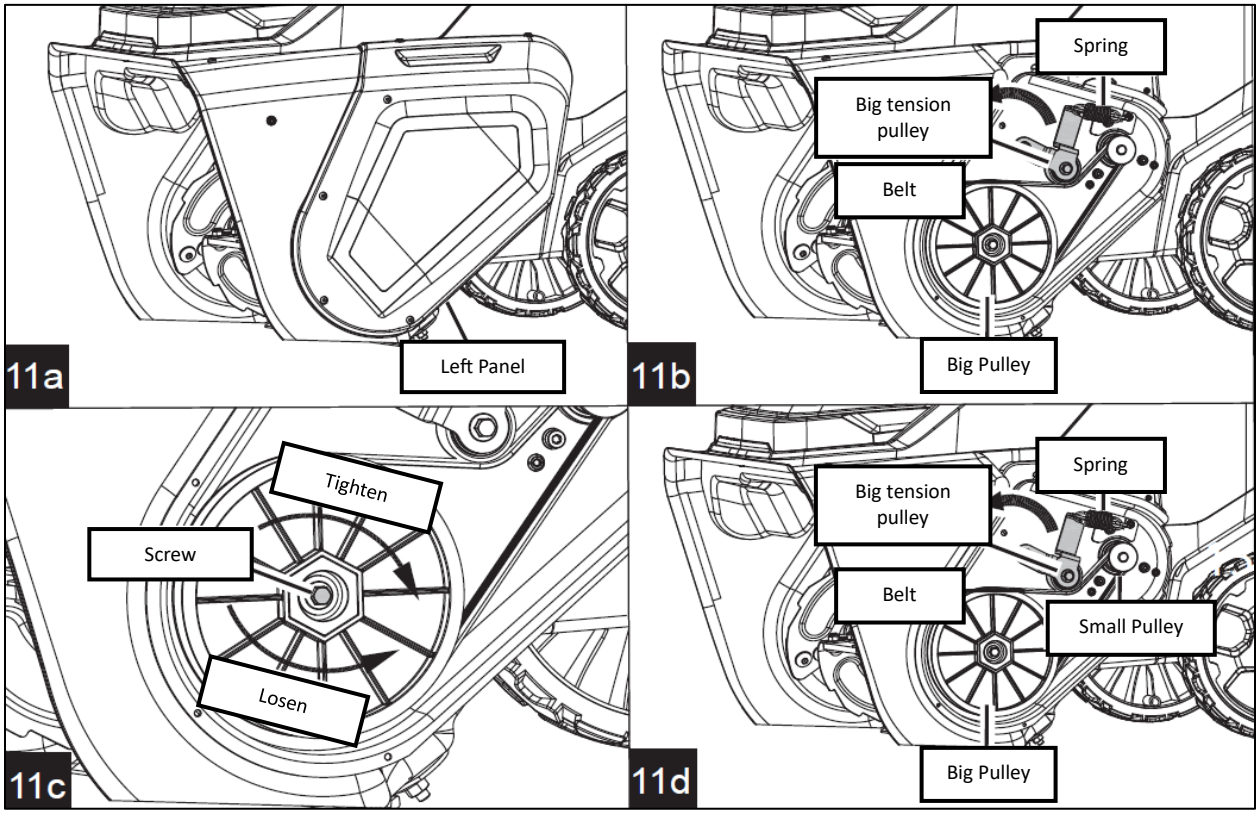

3. REPLACING THE RUBBER PLATES AND BLADE

⚠ **WARNING!**

To prevent accidental start, switch off the machine, remove the battery, and wait a minimum 5 seconds. Be aware that the auger can still be moved even though the power source is switched off.

1. Remove the four nuts and bolts securing the blade on the auger assembly, remove the old blade, replace the new blade, and secure the four nuts and bolts. **(Refer to Figure 12)**

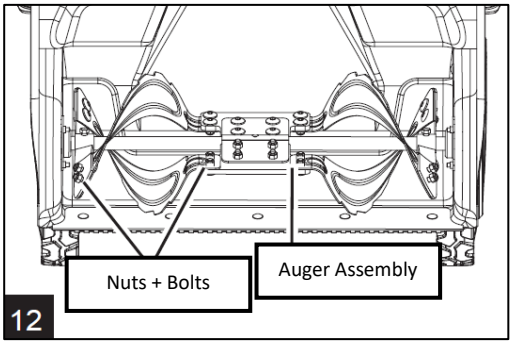

2. Remove the six nuts and bolts, remove the old rubber plates, replace the new rubber plates, and secure the six nuts and bolts. **(Refer to Figure 13)**

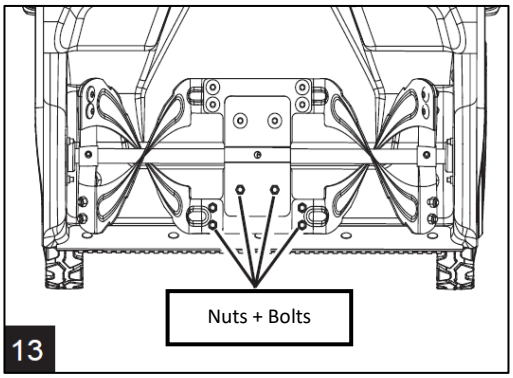

4. SERVICING THE BATTERY.

- If the battery has a malfunction or is damaged: Replace the battery. The battery requires no
- service and cannot be repaired.
- To avoid injury and risk of fire, explosion, or electric shock, and to avoid damage to the
- environment: Cover the battery's terminals with heavy-duty adhesive tape.
- DO NOT attempt to remove or destroy any of the battery pack components. DO NOT attempt to open the battery pack.
- If a leak develops, the released electrolytes are corrosive and toxic. DO NOT get the solution in the eyes or on the skin, and do not swallow it.
- DO NOT place these batteries in your regular household trash. DO NOT incinerate.
- DO NOT place them where they will become part of any waste landfill or municipal solid waste stream.
- Take them to a certified recycling or disposal center.

DO NOT ATTEMPT TO REPAIR THE BATTERY!

⚠ **WARNING!**

If the battery pack cracks or breaks, with or without leaks, do not recharge it and do not use it. Dispose of it and replace it with a new battery pack.

5. SERVICING AND REPAIRING THE CHARGER

- The charger requires no service and cannot be repaired.
- If the charger has a malfunction or is damaged: Replace the charger.
- If the connecting cable has a malfunction or is damaged: DO NOT use the charger and contact PRORUN customer service.

6. LIMITATIONS

- The manufacturer disclaims any responsibility if the device has not been used for its intended purpose or if the user has not followed the safety instructions for use.
- Read the instructions carefully before each use of the machine.
- Keep your receipt; this is necessary for a guarantee.

11. TRANSPORTING AND STORAGE

1. TRANSPORTING THE MACHINE

The Dangerous Goods Legislation requirements apply to the contained Li-ion batteries. When transporting the machine:

- Switch off the machine and remove the battery pack.
- When transporting the machine in a vehicle, secure and position the machine to prevent it from slipping, falling over, impacting, and damage.

2. TRANSPORTING THE BATTERY

Transporting the machine or battery may require that you meet certain requirements specific to your country. Please make sure to respect them by contacting the authorities of your country, in order to respect them all.

Switch off the machine and remove the battery. Make sure the battery is in safe condition.

- Observe the following points when packing the battery: The packaging must be non-conductive.
- Make sure the battery cannot shift inside the packaging. Secure the packaging so that it cannot move.

3. STORING THE MACHINE

When storing the snow thrower:

- Always allow the machine to cool down before storing.
- Switch off the machine and remove the battery pack.
- Conduct thorough cleaning and maintenance for the machine.
- Store the machine indoors in a dry and secure location, out of the reach of children.
- Protect the machine against dampness and corrosive agents such as garden chemicals and deicing salts.
- Remove ice and snow from the machine before storage.
- Do not expose the product to sunlight.
- Clean the product and do complete servicing before you put the product in storage for a long time.

4. STORING THE BATTERY

We recommend that you store the battery with a charge between 40% and 60%. Observe the following points when storing the battery:

- Battery is out of the reach of children.
- Battery is clean and dry.
- Battery is in an enclosed space.
- Battery is stored separately, away from the machine and charger.
- Battery is in non-conductive packaging.
- Do not keep the battery where static electricity can occur. Do not keep the battery in a metal box.
- Store the battery where the temperature is between 5 °C (41 °F) and 25 °C (77 °F) and never in direct sunlight.

5. STORING THE CHARGER

- Disconnect the charger from the wall outlet. Remove the battery from the charger.
- Store the charger indoors in a dry and secure location.
- Keep it out of the reach of children.
- Keep the battery charger where the temperature is between 41 °F (5 °C) and 113 °F (45 °C) and out of sunlight.

12. TROUBLESHOOTING

Problem	Possible Cause	Solution
Motor fails to start when the power switch is depressed.	The battery is not secure. The battery is not charged. Faulty with the machine.	To secure the battery pack, make sure the latches on the top of the battery pack snap into place. Charge the battery pack according to the instructions included with your model. Contact PRORUN Customer Service.
Motor runs, but the impeller does not turn.	The belt is damaged.	Replace the belt.
Machines stop unintentionally during operation.	The battery pack is too hot. Electrical malfunction.	Allow the battery to cool down gradually at ambient temperatures. Contact PRORUN Customer Service.
Machine runtime is too short.	Battery not fully charged. The useful life of the battery has been reached or exceeded.	Fully charge the battery. Contact PRORUN Customer Service for replacement.
A thin layer of snow stays behind.	The scraper is damaged.	Replace the scraper.

13. DISPOSAL

All toxic materials must be disposed of in a specified manner to prevent contamination of the environment. Before disposing of damaged or worn-out Lithium-Ion battery packs, contact your local waste disposal agency or the local Environmental Protection Agency for information and specific instructions. Take the batteries to a local recycling and/or disposal center certified for lithium-ion disposal.

14. EXPLODED VIEW AND PARTS LIST

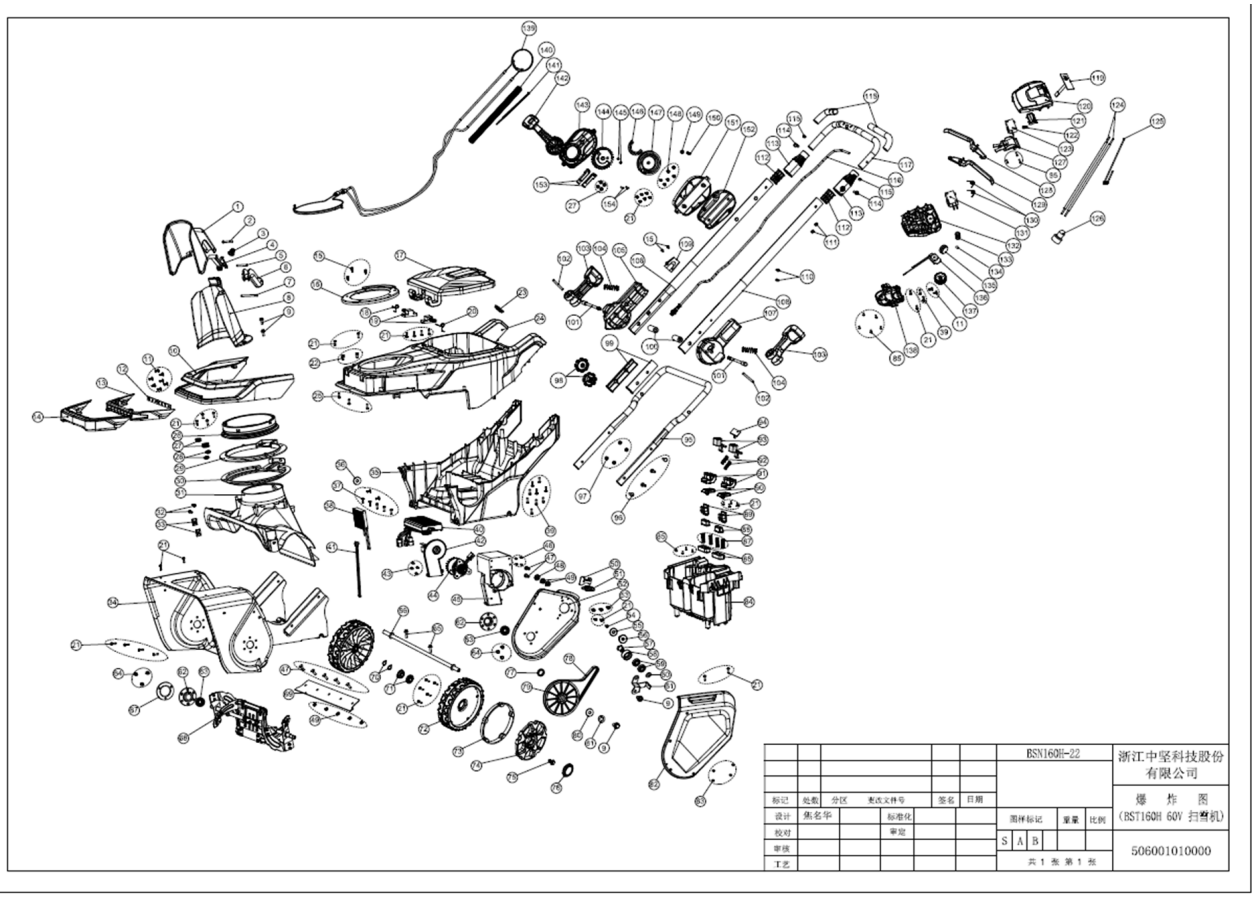

PRORUN

No.	Description	Qty	Part #
1	SNOW THROWING CAP	1	20087483
2	FLAT ROUND HEAD SEMI-HOLLOW RIVETS	1	20087464
3	HANDLE PRESSURE SPRING	1	20087505
4	POSITIONING RODS	1	20087479
5	POSITIONING PINS	1	20087506
6	HANDLE CAPS	1	20087457
7	RETAINING PINS	1	20087459
8	SNOW THROWING BUCKET	1	20087529
9	HEXAGONAL FLANGE BOLTS	4	20061200
10	DECORATIVE COVER	1	20087502
11	SCREWS ST2.9x8F	9	20051780
12	LAMP PLATE ASSEMBLY	1	20087485
13	LED LAMP CUP	1	20087486
14	LED LAMPSHADE	1	20087462
15	SCREWS ST3.5x9-C,	3	20055740
16	SNOW THROWER BUCKET FIXING COVER	1	20087520
17	BATTERY DOOR	1	20087511
18	BATTERY DOOR TORSION SPRING LEFT	1	20087537
19	BATTERY DOOR PIVOT	2	20087476
20	BATTERY DOOR TORSION SPRING RIGHT	1	20087536
21	SCREWS	42	20060969
22	SCREWS ST4x10	4	20062789
23	WIRE PROTECTION SLEEVE	1	20087508
24	COVER	1	20087469
25	SCREWS ST4x10	3	20054543
26	SNOW THROWER	1	20087523
27	PULLEY	6	20087522
28	BEARING CLAMP RETAINING RING BST160H	2	20088506
29	FIXING RING	1	20087503
30	SNOW BUCKET HOLDER	1	20089520
31	SNOW COLLECTION BUCKET	1	20087509
32	SCREWS M5x18	2	20060954
33	NUT SNAP M5	2	20062763
34	HOUSING COMPONENTS	1	20093753
35	BASE	1	20087458
36	LARGE WASHERS	1	20054562
37	SCREWS ST4.2x16	7	20055744
38	DOUBLE PACK SWITCHING CONTROLLER BST160H	1	20088098
39	SCREWS ST4.2x28-F	11	20060965
40	MAIN CONTROLLER	1	20093025
41	6P CABLE	1	20088525
42	SHIELD COVER	1	20087450
43	SCREWS ST3.5x13	4	20051732
44	MOTOR 6435	1	20087497
45	MOTOR COVER	1	20087495
46	SCREWS	4	20051768
47	SEMICIRCULAR HEAD SQUARE NECK BOLTS	7	20061289
48	SPACER	1	20087480

49	M6 NUTS	7	20061422
50	SPRING HOLDER PLATE	1	20087491
51	TENSION SPRING	1	20087498
52	MOTOR FIXING PLATE	1	20089519
53	SCREWS M5x18	3	20061151
54	SCREW ST4*12	1	20094399
55	PULLEY COVER	1	20087477
56	SMALL PULLEY	1	20087492
57	PIN	1	20087496
58	TENSION PULLEY	1	20087481
59	BEARING 6902Z, 28x15x7	2	20088101
60	FLAT WASHER 10, GB/T97.1	1	20061497
61	TENSION PULLEY BRACKET	1	20087487
62	BEARING HOUSINGS	2	20087463
63	BEARING 6002-2Z.	2	20061618
64	HEXAGONAL FLANGE FACE BOLTS M5x12	6	20061195
65	FLANGE FACE BOLTS	2	20061241
66	WHEEL AXLES	1	20087465
67	PROTECTIVE COVER PLATE	1	20087517
68	SNOWPLOW PADDLE ASSEMBLY	1	20087493
69	SNOWPLOW BLADE	1	20087471
70	WAVE ELASTIC WASHERS	2	20061469
71	LOW SPEED BEARING L221A	4	20062133
72	FRONT WHEEL ASSEMBLY	2	20084657
73	FRONT WHEEL RIM	2	20083146
74	FIVE-SPOKE FRONT WHEEL COVER	2	20083127
75	HEXAGONAL FLANGE FACE BOLTS	2	20061274
76	SMALL WHEEL COVER	2	20075242
77	LIMIT BUSHING	1	20088536
78	CLEVIS BELT	1	20087478
79	LARGE PULLEY	1	20087468
80	FLAT WASHERS 6x18x1.5	1	20061460
81	SPRING WASHERS 6	1	20061487
82	SIDE COVER	1	20087524
83	SCREWS M4X10	4	20077884
84	BATTERY BOX	1	20087241
85	SCREWS ST2.9x12F	12	20051769
86	EJECTOR KNOB LIMIT PLATE	2	20079676
87	BATTERY PACK EJECTOR SPRING	4	20090637
88	EJECTOR KNOB	2	20079677
89	TAB HOLDER COMPONENTS	2	20088669
90	CARABINER	2	20087246
91	CLIP HOLDER	2	20087245
92	BATTERY PACK RELEASE BUTTON	2	20079696
93	BATTERY PACK RELEASE BUTTON	2	20087242
94	KEYHOLE COVER	1	20087243
95	LOWER PUSHER	1	20087482
96	SEMICIRCULAR HEAD SQUARE NECK BOLT	4	20088099

97	HEXAGONAL THICK NUTS M6	4	20061347
98	LOCKING KNOB	2	20060728
99	LOWER PUSHROD PLUG	2	20087519
100	LOCKING SLEEVE	2	20088585
101	LIMIT PIN	2	20087454
102	CYLINDRICAL PIN ¢6x50 GB/T119.2	2	20061576
103	PUSH ROD LOCK TWIST	2	20087473
104	RESET COMPRESSION SPRING	2	20087474
105	RIGHT FIXING COVER	1	20087484
106	RIGHT PUSH ROD	1	20087467
107	LEFT FIXING COVER	1	20087475
108	LEFT PUSHER	1	20087510
109	CRIMP COVER	1	20087460
110	SCREWS ST4x8	2	20051786
111	NUT M5	2	20061377
112	UPPER ACTUATOR CONNECTING BLOCK	2	20087507
113	CONNECTING SLEEVE	2	20083078
114	SCREW M5*22	2	20061028
115	CLOSED END FLAT ROUND HEAD ALUMINUM BLIND RIVETS	2	20061661
116	SWITCH BOX WIRE 6PIN WATERPROOF WIRE	1	20087515
117	UPPER PUSH ROD (20087528)	1	20087528
118	SLEEVE	2	20088097
119	MEMBRANE SWITCH BST160H	1	20087453
120	SWITCH BOX TOP COVER	1	20083117
121	SWITCH BOX PUSH BUTTON	1	20083101
122	LOCK BUTTON SPRING BLM160H	1	20060718
123	MICROSWITCH	1	20051515
124	WIRE UL1007,22AWG BLACK	2	20088528
125	2P CONNECTION CABLE	1	20088526
126	CLOSED END CE2	1	20050395
127	CRIMP PLATE	1	20083124
128	RIGHT SELF-PROPELLED TRIGGER	1	20085994
129	LEFT SELF-PROPELLED TRIGGER	1	20085996
130	TRIGGER TORSION SPRING BLM160-21	2	20086891
131	MICROSWITCH	1	20082041
132	SWITCH BOX LOWER COVER	1	20083130
133	STEEL BALL STRING	1	20083093
134	STEEL BALL	1	20072253
135	GUIDEPOST	1	20087527
136	SPEED CONTROL PCB	1	20088527
137	KNOB	1	20088100
138	SELF-PROPELLED BOX COVER	1	20083148
139	PULL LOCKS	2	20087490

140	BELLOWS	1	20088520
141	CABLE TIE 4x300, Black	1	20051909
142	STEERING HANDLE	1	20087500
143	CONTROL BOX TOP COVER	1	20087514
144	LARGE GEAR	1	20087521
145	SCREWS ST2.9x6	2	20077891
146	GRADUATED DIAL	1	20087466
147	WINDING WHEEL	1	20087470
148	SCREWS ST4x12	6	20060958
149	POSITIONING BUSHINGS	1	20087525
150	POSITIONING SLEEVE COMPRESSION SPRINGS	1	20087488
151	CONTROL BOX	1	20087516
152	CONTROL BOX FIXING COVER	1	20087451
153	PULLEY BRACKET	2	20087513
154	PULLEY SHAFT	2	20087456

PRORUN regularly improves our products, and you may find slight differences between your machine and the descriptions contained within this operator's manual. Modifications can be made to the machine without notice and without the obligation to update the manual, provided that the essential safety and functional characteristics remain unaltered. Contact PRORUN Customer Service with any questions and for current specifications.

PRORUN / TOPSUN USA
10130 Perimeter Parkway
Suite 140
Charlotte, NC 28216
Customer Service: (844) 905-0882 Email: info@proruntech.com Website: www.proruntools.com

Zhejiang Zhongjian Technology Co., Ltd Web: www.topsunpower.cc
E-mail: sales@topsunpower.cc
ADD: No.155 Mingyuan North AVE, Economic Development Zone, Yongkang, Zhejiang, 321300, P.R. CHINA
Made in China