Goodman
Air Conditioning & Heating

GXV9S

UP TO 19 SEER2
2 TO 5 TONS

HIGH-EFFICIENCY, VARIABLE-SPEED, INVERTER DRIVEN R-32 SPLIT SYSTEM AIR CONDITIONER

Contents

Nomenclature....2
Product Specifications....3
Expanded Cooling Data....4
Performance Data....12
Standard Mode....12
Sound Data....14
Sound Power Levels....14
Sound Pressure....15
AHRI Ratings (see note)....16
Wiring Diagram....17
Dimensions....20
Accessories....23



R32

Standard Features

- Variable-speed swing compressors
- Quiet digitally commutated fan motor
- High-density compressor sound blanket
- Compatible with Goodman connected thermostat and other Goodman communicating equipment
- Propietary control algorithmic logic
- In communicating mode, only two low-voltage wires to outdoor unit required
- Diagnostic indicator lights, seven-segment
- LED display, and fault code storage
- Propietary Inside intelligence for diagnostics
- Quiet-mode- provides enhanced acoustical comfort, up to 3 different sound levels (as low as 45 dBA)
- Field-selectable boost mode increases compressor speed during unusually high loads
- Field-installed filter drier
- Coil and ambient temperature sensors
- Suction pressure transducer
- Sweat connection service valves with easy access to gauge ports
- AHRI Certified; ETL Listed

Cabinet Features

- Heavy-gauge galvanized steel cabinet with grille-style sound control side design
- Custom Ivory white powder-paint finish
- High corrosion-resistant (ZAM®), unpaintedsteel bottom frame and legs
- 500-hour salt-spray tested
- Wire fan discharge grille
- Top and side maintenance access
- When properly anchored, meets the 2023 Florida Building Code unit integrity requirements for hurricane-type winds (Anchor bracket kits available.)

10 YEAR PARTS LIMITED WARRANTY* | 10 YEAR UNIT REPLACEMENT LIMITED WARRANTY*

ONE-TIME COMPRESSOR REPLACEMENT IN YEARS 11-99‡ OFFERED BY ASURE

ETL Listed Intertek | AHRI CERTIFIED | COMPANY WITH QUALITY SYSTEM CERTIFIED BY DNV GL ISO 9001 | COMPANY WITH ENVIRONMENTAL SYSTEM CERTIFIED BY DNV GL ISO 14001 | BBB ACCREDITED BUSINESS

* Complete warranty available from your local dealer or at www.goodmanmfg.com. To receive the 10-Year Unit Replacement Limited Warranty (good for as long as you own your home) and 10-Year Parts Limited Warranty, online registration must be completed within 60 days of installation. Online registration is not required in California, Florida, or Québec. The duration of warranty coverages in Texas and Florida differs in some cases. Changes in law, regulations, or technology may result in an equivalent unit not being available. Other limitations and exclusions apply, refer to complete warranty details for full list of limitations and exclusions, as well as rights and obligations should an equivalent unit not be available.

‡ One-time Compressor Replacement coverage is available to the original homeowner for years 11-99 after the installation date through an ***ASURE*** Extend Service Plan. Complete details about the Extended Service Plan options available from your ***ASURE*** dealer.

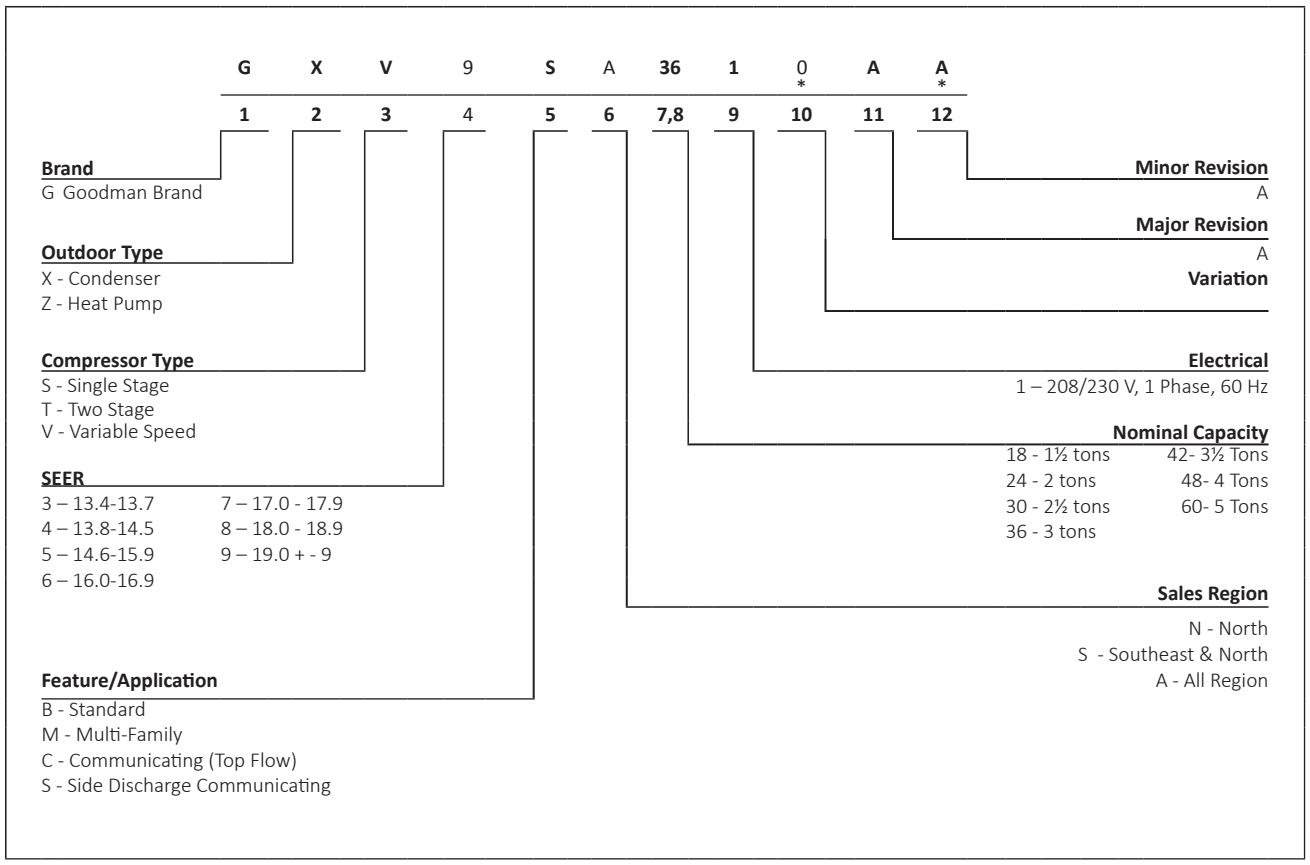
G X V 9 S A 36 1 0* A A*
1 2 3 4 5 6 7,8 9 10 11 12
Brand
G Goodman Brand
Outdoor Type
X - Condenser
Z - Heat Pump
Compressor Type
S - Single Stage
T - Two Stage
V - Variable Speed
SEER
3 – 13.4-13.7
4 – 13.8-14.5
5 – 14.6-15.9
6 – 16.0-16.9
7 – 17.0 - 17.9
8 – 18.0 - 18.9
9 – 19.0 + - 9
Feature/Application
B - Standard
M - Multi-Family
C - Communicating (Top Flow)
S - Side Discharge Communicating
Sales Region
N - North
S - Southeast & North
A - All Region
Nominal Capacity
18 - 1½ tons
24 - 2 tons
30 - 2½ tons
36 - 3 tons
42- 3½ Tons
48- 4 Tons
60- 5 Tons
Electrical
1 – 208/230 V, 1 Phase, 60 Hz
Variation
Major Revision
A
Minor Revision
A

	GXV9S A2410A*	GXV9S A3610A*	GXV9S A4810A*	GXV9S A6010A*
CAPACITIES (AHRI RATED)				
Max. Cooling (BTU/h)	23,200	35,000	46,500	57,000
AMBIENT OPERATION RANGE COOLING (°FDB(°CDB))	0 to 115 (-17.8 to 46.1)			
COMPRESSOR				
Type	Swing	Swing	Swing	Swing
CONDENSER FAN MOTOR				
Horsepower	0.20	0.36	0.36	2 x 0.32
REFRIGERATION SYSTEM				
Refrigerant Line Size[1]				
Liquid Line Size ("O.D.)	⅜"	⅜"	⅜"	⅜"
Suction Line Size ("O.D.)	⅞"	1⅛"	1⅛"	1⅛"
Refrigerant Connection Size				
Liquid Valve Size ("O.D.)	⅜"	⅜"	⅜"	⅜"
Suction Valve Size ("O.D.)	⅞"	⅞"	⅞"	⅞"
Valve Connection Type	Front Sealing	Front and Back Sealing	Front and Back Sealing	Front and Back Sealing
Refrigerant Charge (oz.)	76	100	118	162
Expansion Device	EEV	EEV	EEV	EEV
Superheat at Service Valve	Auto-control	Auto-control	Auto-control	Auto-control
Subcooling at Service Valve	14±1°F	8±1°F	9±1°F	11±1°F
ELECTRICAL DATA				
Voltage / Phase (60 Hz)	208-230/1	208-230/1	208-230/1	208-230/1
Fan/Compressor Inverter Drive Input	17.6	25.4	30	24.5
Minimum Circuit Ampacity[2]	22.4	31.8	37.5	34.4
Max. Overcurrent Protection[3]	25	35	40	40
Min / Max Volts	197/253	197/253	197/253	197/253
Electrical Conduit Size	½"	½" or ¾"	½" or ¾"	½" or ¾"
EQUIPMENT WEIGHT (LBS)	129	163	174	236
SHIP WEIGHT (LBS)	143	183	196	271

[1] Tested and rated in accordance with ANSI/AHRI Standard 210/240

[2] Wire size should be determined in accordance with National Electrical Codes; extensive wire runs will require larger wire sizes

[3] Must use time-delay fuses or HACR-type circuit breakers of the same size as noted.

NOTES

- Always check the S&R plate for electrical data on the unit being installed.
- Installer will need to supply ⅞" to 1⅛" adapters for suction line connections.
- Unit is charged with refrigerant for 15' of ⅜" liquid line. System charge must be adjusted per Installation Instructions Final Charge Procedure.

(See table below for allowable line set diameter)

UNIT TONS	ALLOWABLE LINE SET DIAMETER						
	LIQUID			SUCTION			
	¼	5/16	⅜	⅝	¾	⅞	1⅛
2.0		x	x	x	x*1	x	
3.0			x	x		x	x
4.0			x	x		x	x
5.0			x			x	x

x Allowable combination

*1:For marked combinations, if normal ambient operation temperature is less than 14°F, limit line set length to 50 ft. max.

OUTDOOR UNIT	GXV9S*481*A*/ GXV9S*601*A*	TRIM MORE THAN 5% SETTINGS ARE INVALID. TRIMMED UP CFM MAKES MISS MATCHING ERROR.
INDOOR UNIT	G*VT960804C G*VM970804C G*VT800804C	

			OUTDOOR AMBIENT TEMPERATURE																							
			65ºF				75ºF				85ºF				95ºF				105ºF				115ºF			
			ENTERING INDOOR WET BULB TEMPERATURE																							
IDB	AIRFLOW		59	63	67	71	59	63	67	71	59	63	67	71	59	63	67	71	59	63	67	71	59	63	67	71
70	680	MBh	25.2	25.6	26.3		24.4	24.7	25.5		23.1	23.5	24.2		21.5	21.8	22.5		19.6	20.0	20.6		18.0	18.3	19.0	
		S/T	0.58	0.50	0.37		0.59	0.51	0.38		0.62	0.54	0.41		0.64	0.56	0.43		0.66	0.59	0.45		1.01	0.64	0.51	
		ΔT	21	19	15		20	18	15		20	18	15		19	17	14		18	16	13		18	16	14	
		kW	1.54	1.54	1.53		1.71	1.71	1.71		1.90	1.90	1.90		2.10	2.10	2.10		2.32	2.32	2.32		2.58	2.58	2.58	
		Amps	5.5	5.5	5.5		6.2	6.2	6.2		6.9	6.9	6.9		7.7	7.7	7.7		8.5	8.5	8.5		9.5	9.4	9.4	
		Hi PR	260	262	263		302	303	305		345	346	348		391	392	394		441	443	444		495	496	498	
		Lo PR	120	123	130		126	129	136		131	134	141		135	138	145		138	142	149		143	147	154	
	800	MBh	25.6	26.0	26.7		24.8	25.1	25.8		23.5	23.8	24.6		21.8	22.2	22.9		20.0	20.3	21.0		18.3	18.6	19.3	
		S/T	0.65	0.58	0.45		0.66	0.59	0.45		0.69	0.62	0.48		0.71	0.64	0.50		0.74	0.66	0.53		1.01	0.72	0.58	
		ΔT	19	17	14		19	17	13		18	17	13		17	16	12		17	15	12		17	15	12	
		kW	1.55	1.55	1.55		1.72	1.72	1.72		1.91	1.91	1.91		2.11	2.11	2.11		2.34	2.33	2.33		2.59	2.59	2.59	
		Amps	5.6	5.5	5.5		6.2	6.2	6.2		7.0	7.0	6.9		7.7	7.7	7.7		8.6	8.5	8.5		9.5	9.5	9.5	
		Hi PR	263	264	266		304	305	307		348	349	350		394	395	397		444	445	447		498	499	501	
		Lo PR	122	125	132		128	131	138		133	136	143		137	140	147		140	144	151		145	149	156	
	920	MBh	26.1	26.5	27.2		25.2	25.6	26.3		24.0	24.3	25.0		22.3	22.6	23.3		20.4	20.8	21.4		18.8	19.1	19.7	
		S/T	0.69	0.62	0.48		0.70	0.63	0.49		0.73	0.65	0.52		0.75	0.68	0.54		0.78	0.70	0.57		1.01	0.76	0.62	
		ΔT	18	16	13		18	16	12		17	15	12		16	15	11		16	14	11		16	14	11	
		kW	1.56	1.56	1.56		1.73	1.73	1.73		1.92	1.92	1.92		2.12	2.12	2.12		2.34	2.34	2.34		2.60	2.60	2.60	
		Amps	5.6	5.6	5.6		6.3	6.3	6.3		7.0	7.0	7.0		7.8	7.8	7.7		8.6	8.6	8.6		9.5	9.5	9.5	
		Hi PR	266	267	269		307	308	310		350	351	353		397	398	400		447	448	450		500	501	503	
		Lo PR	124	127	134		130	134	141		135	139	146		139	142	150		143	146	154		148	151	159	
75	680	MBh	25.2	25.6	26.4	27.5	24.4	24.7	25.5	26.6	23.1	23.5	24.2	25.3	21.5	21.8	22.5	23.6	19.7	20.0	20.7	21.7	18.0	18.3	19.0	20.0
		S/T	0.71	0.63	0.50	0.36	0.72	0.64	0.51	0.37	0.74	0.67	0.53	0.39	1.00	0.69	0.56	0.41	1.01	0.72	0.58	0.44	1.01	0.77	0.64	0.49
		ΔT	25	23	20	16	24	22	19	15	24	22	18	15	22	21	18	14	21	20	17	13	22	20	17	14
		kW	1.54	1.54	1.53	1.55	1.71	1.71	1.71	1.72	1.90	1.90	1.90	1.91	2.10	2.10	2.10	2.11	2.32	2.32	2.32	2.33	2.58	2.58	2.57	2.59
		Amps	5.5	5.5	5.5	5.5	6.2	6.2	6.2	6.2	6.9	6.9	6.9	6.9	7.7	7.7	7.7	7.7	8.5	8.5	8.5	8.5	9.4	9.4	9.4	9.5
		Hi PR	261	262	264	268	302	303	305	309	345	346	348	353	392	393	394	399	442	443	445	449	495	496	498	503
		Lo PR	120	123	130	141	126	129	136	148	131	134	141	153	135	138	145	157	138	142	149	161	143	147	154	166
	800	MBh	25.6	26.0	26.7	27.9	24.8	25.1	25.9	27.0	23.5	23.9	24.6	25.7	21.8	**22.2**	22.9	23.9	20.0	20.3	21.0	22.0	18.3	18.7	19.3	20.3
		S/T	0.78	0.71	0.57	0.43	0.79	0.72	0.58	0.44	0.82	0.74	0.61	0.47	1.00	**0.77**	0.63	0.49	1.01	0.79	0.66	0.51	1.01	0.85	0.71	0.57
		ΔT	24	22	18	14	23	21	17	14	22	20	17	14	21	**19**	16	13	20	18	15	12	20	19	16	13
		kW	1.55	1.55	1.54	1.56	1.72	1.72	1.72	1.73	1.91	1.91	1.91	1.92	2.11	**2.11**	2.11	2.12	2.33	2.33	2.33	2.34	2.59	2.59	2.59	2.60
		Amps	5.5	5.5	5.5	5.6	6.2	6.2	6.2	6.3	7.0	7.0	6.9	7.0	7.7	**7.7**	7.7	7.8	8.5	8.5	8.5	8.6	9.5	9.5	9.5	9.5
		Hi PR	263	265	266	271	305	306	308	312	348	349	351	355	394	**395**	397	402	444	445	447	452	498	499	501	505
		Lo PR	122	125	132	143	128	131	138	150	133	136	143	155	137	**140**	147	159	140	144	151	163	145	149	156	168
	920	MBh	26.1	26.5	27.2	28.4	25.2	25.6	26.3	27.5	24.0	24.3	25.0	26.1	22.3	22.6	23.3	24.4	20.4	20.8	21.4	22.5	18.8	19.1	19.7	20.8
		S/T	0.82	0.74	0.61	0.47	0.83	0.75	0.62	0.48	1.00	0.78	0.65	0.51	1.00	0.80	0.67	0.53	1.01	0.83	0.69	0.55	1.01	0.89	0.75	0.61
		ΔT	22	21	17	13	22	20	16	13	21	19	16	13	20	18	15	12	19	18	14	11	19	18	15	12
		kW	1.56	1.56	1.55	1.57	1.73	1.73	1.73	1.74	1.92	1.92	1.92	1.93	2.12	2.12	2.12	2.13	2.34	2.34	2.34	2.35	2.60	2.60	2.60	2.61
		Amps	5.6	5.6	5.6	5.6	6.3	6.3	6.2	6.3	7.0	7.0	7.0	7.0	7.8	7.8	7.7	7.8	8.6	8.6	8.6	8.6	9.5	9.5	9.5	9.6
		Hi PR	266	267	269	273	307	308	310	315	350	351	353	358	397	398	400	404	447	448	450	454	500	502	503	508
		Lo PR	124	128	134	146	130	134	141	152	135	139	146	158	139	143	150	162	143	146	154	166	148	151	159	171

IDB = Entering Indoor Dry Bulb Temperature

Shaded area is ACCA (TVA) conditions.

kW = Total system power

High and low pressures are measured at the liquid and suction service valves.

Amps = outdoor unit amps (comp.+fan)

Airflow may vary depending on actual ambient conditions and system operation modes.

			OUTDOOR AMBIENT TEMPERATURE																							
			65ºF				75ºF				85ºF				95ºF				105ºF				115ºF			
			ENTERING INDOOR WET BULB TEMPERATURE																							
IDB	AIRFLOW		59	63	67	71	59	63	67	71	59	63	67	71	59	63	67	71	59	63	67	71	59	63	67	71
80	680	MBh	25.4	25.7	26.5	27.6	24.5	24.9	25.6	26.7	23.3	23.6	24.3	25.4	21.6	21.9	22.6	23.7	19.8	20.1	20.8	21.8	18.1	18.4	19.1	20.1
		S/T	0.83	0.75	0.62	0.48	0.99	0.76	0.63	0.49	1.00	0.79	0.66	0.52	1.00	0.82	0.68	0.54	1.01	0.84	0.71	0.56	1.01	1.01	0.76	0.62
		ΔT	29	27	24	20	28	26	23	19	27	26	22	19	26	24	21	18	25	23	20	17	25	23	21	17
		kW	1.54	1.54	1.53	1.55	1.71	1.71	1.71	1.72	1.90	1.90	1.90	1.91	2.10	2.10	2.10	2.11	2.32	2.32	2.32	2.33	2.58	2.58	2.58	2.59
		Amps	5.5	5.5	5.5	5.5	6.2	6.2	6.2	6.2	6.9	6.9	6.9	7.0	7.7	7.7	7.7	7.7	8.5	8.5	8.5	8.5	9.5	9.4	9.4	9.5
		Hi PR	261	262	264	269	302	304	305	310	346	347	348	353	392	393	395	400	442	443	445	450	496	497	499	503
		Lo PR	120	124	130	142	126	130	137	148	131	135	142	153	135	139	146	158	139	142	150	162	144	147	155	167
	800	MBh	25.8	26.1	26.9	28.0	24.9	25.2	26.0	27.1	23.6	24.0	24.7	25.8	22.0	22.3	**23.2**	24.1	20.1	20.4	21.1	22.2	18.5	18.8	19.4	20.4
		S/T	0.90	0.83	0.70	0.56	0.99	0.84	0.71	0.56	1.00	0.87	0.73	0.59	1.00	0.89	**0.75**	0.61	1.01	0.92	0.78	0.64	1.01	1.01	0.84	0.69
		ΔT	28	26	22	19	27	25	22	18	26	24	21	18	25	23	**21**	17	24	22	19	16	24	22	19	16
		kW	1.55	1.55	1.55	1.56	1.72	1.72	1.72	1.73	1.91	1.91	1.91	1.92	2.11	2.11	**2.11**	2.12	2.34	2.33	2.33	2.34	2.59	2.59	2.59	2.60
		Amps	5.6	5.5	5.5	5.6	6.2	6.2	6.2	6.3	7.0	7.0	6.9	7.0	7.7	7.7	**8.3**	7.8	8.6	8.5	8.5	8.6	9.5	9.5	9.5	9.5
		Hi PR	264	265	267	271	305	306	308	313	348	349	351	356	395	396	**395**	402	445	446	448	452	498	499	501	506
		Lo PR	122	126	133	144	128	132	139	150	133	137	144	156	137	141	**150**	160	141	144	152	164	146	149	157	169
	920	MBh	26.3	26.6	27.4	28.5	25.4	25.7	26.5	27.6	24.1	24.4	25.2	26.3	22.4	22.7	23.4	24.5	20.6	20.9	21.6	22.6	18.9	19.2	19.9	20.9
		S/T	0.99	0.87	0.73	0.59	0.99	0.88	0.74	0.60	1.00	0.91	0.77	0.63	1.00	0.93	0.79	0.65	1.01	1.01	0.82	0.68	1.01	1.01	0.88	0.73
		ΔT	27	25	21	18	26	24	20	17	25	23	20	17	24	22	19	16	23	21	18	15	23	21	18	15
		kW	1.56	1.56	1.56	1.57	1.73	1.73	1.73	1.74	1.92	1.92	1.92	1.93	2.12	2.12	2.12	2.13	2.34	2.34	2.34	2.35	2.60	2.60	2.60	2.61
		Amps	5.6	5.6	5.6	5.6	6.3	6.3	6.3	6.3	7.0	7.0	7.0	7.0	7.8	7.8	7.7	7.8	8.6	8.6	8.6	8.6	9.5	9.5	9.5	9.6
		Hi PR	266	268	269	274	308	309	311	315	351	352	354	358	397	398	400	405	447	449	450	455	501	502	504	508
		Lo PR	125	128	135	147	131	134	141	153	136	139	146	158	140	143	150	162	143	147	154	166	148	152	159	171
85	680	MBh	25.8	26.2	26.9	28.1	24.9	25.3	26.0	27.1	23.7	24.0	24.7	25.8	22.0	22.3	23.0	24.1	20.2	20.5	21.2	22.2	18.5	18.8	19.5	20.5
		S/T	0.99	0.85	0.72	0.58	0.99	0.86	0.73	0.59	1.00	1.00	0.76	0.62	1.00	1.00	0.78	0.64	1.01	1.01	0.81	0.66	1.01	1.01	0.86	0.72
		ΔT	33	31	27	24	32	30	26	23	31	29	26	22	30	28	25	21	28	27	24	20	28	27	24	21
		kW	1.54	1.54	1.54	1.55	1.71	1.71	1.71	1.72	1.90	1.90	1.90	1.91	2.11	2.10	2.10	2.12	2.33	2.33	2.32	2.34	2.58	2.58	2.58	2.59
		Amps	5.5	5.5	5.5	5.6	6.2	6.2	6.2	6.2	6.9	6.9	6.9	7.0	7.7	7.7	7.7	7.7	8.5	8.5	8.5	8.6	9.5	9.5	9.4	9.5
		Hi PR	262	264	265	270	304	305	307	311	347	348	350	354	393	394	396	401	443	444	446	451	497	498	500	504
		Lo PR	122	125	132	144	128	131	138	150	133	136	144	155	137	140	148	160	141	144	151	163	146	149	157	169
	800	MBh	26.2	26.5	27.3	28.5	25.3	25.7	26.4	27.5	24.0	24.4	25.1	26.2	22.4	22.7	23.4	24.5	20.5	20.8	21.5	22.5	18.8	19.1	19.8	20.8
		S/T	0.99	0.93	0.80	0.65	0.99	0.94	0.81	0.66	1.00	1.00	0.83	0.69	1.00	1.00	0.86	0.71	1.01	1.01	0.88	0.74	1.01	1.01	1.01	0.80
		ΔT	31	30	26	22	30	29	25	22	30	28	25	21	28	27	23	20	27	25	22	19	27	25	22	19
		kW	1.55	1.55	1.55	1.56	1.73	1.73	1.72	1.74	1.92	1.92	1.91	1.93	2.12	2.12	2.11	2.13	2.34	2.34	2.33	2.35	2.59	2.59	2.59	2.60
		Amps	5.6	5.6	5.5	5.6	6.2	6.2	6.2	6.3	7.0	7.0	7.0	7.0	7.7	7.7	7.7	7.8	8.6	8.6	8.5	8.6	9.5	9.5	9.5	9.5
		Hi PR	265	266	268	273	306	307	309	314	349	351	352	357	396	397	399	403	446	447	449	454	500	501	502	507
		Lo PR	124	127	134	146	130	134	141	152	135	139	146	158	139	142	150	162	143	146	154	166	148	151	159	171
	920	MBh	26.7	27.0	27.8	28.9	25.8	26.1	26.9	28.0	24.5	24.8	25.6	26.7	22.8	23.1	23.8	24.9	20.9	21.3	22.0	23.0	19.3	19.6	20.2	21.2
		S/T	0.99	0.97	0.83	0.69	0.99	0.99	0.84	0.70	1.00	1.00	0.87	0.73	1.00	1.00	0.90	0.75	1.01	1.01	0.92	0.78	1.01	1.01	1.01	0.83
		ΔT	30	28	25	21	29	27	24	20	29	27	23	20	27	26	22	19	26	24	21	18	26	24	21	18
		kW	1.56	1.56	1.56	1.57	1.74	1.74	1.73	1.75	1.93	1.93	1.92	1.94	2.13	2.13	2.12	2.14	2.35	2.35	2.34	2.36	2.60	2.60	2.60	2.61
		Amps	5.6	5.6	5.6	5.7	6.3	6.3	6.3	6.3	7.0	7.0	7.0	7.1	7.8	7.8	7.8	7.8	8.6	8.6	8.6	8.6	9.5	9.5	9.5	9.6
		Hi PR	268	269	271	275	309	310	312	316	352	353	355	360	399	400	401	406	449	450	452	456	502	503	505	510
		Lo PR	127	130	137	149	133	136	143	155	137	141	148	160	141	145	152	164	145	149	156	168	150	153	161	173

IDB = Entering Indoor Dry Bulb Temperature

Shaded ares is AHRI contitions.

kW = Total system power

High and low pressures are measured at the liquid and suction service valves.

Amps = outdoor unit amps (comp.+fan)

Airflow may vary depending on actual ambient conditions and system operation modes.

			OUTDOOR AMBIENT TEMPERATURE																							
			65ºF				75ºF				85ºF				95ºF				105ºF				115ºF			
			ENTERING INDOOR WET BULB TEMPERATURE																							
IDB	AIRFLOW		59	63	67	71	59	63	67	71	59	63	67	71	59	63	67	71	59	63	67	71	59	63	67	71
70	1070	MBh	40.3	40.8	42.0		38.5	39.0	40.2		36.1	36.6	37.7		33.1	33.6	34.6		29.8	30.3	31.4		26.9	27.4	28.4	
		S/T	0.61	0.53	0.39		0.62	0.54	0.40		0.64	0.56	0.42		0.66	0.59	0.45		0.69	0.61	0.47		0.74	0.66	0.52	
		ΔT	23	21	17		22	20	17		22	20	16		21	19	15		20	18	14		20	18	15	
		kW	2.22	2.22	2.22		2.52	2.52	2.51		2.85	2.85	2.84		3.21	3.21	3.20		3.62	3.61	3.61		4.09	4.09	4.08	
		Amps	6.2	6.2	6.1		7.7	7.7	7.7		9.7	9.6	9.6		12.0	12.0	12.0		15.0	15.0	15.0		18.7	18.7	18.6	
		Hi PR	207	207	209		256	257	259		313	314	316		378	379	380		451	452	454		534	536	538	
		Lo PR	125	131	140		128	135	144		131	137	146		132	138	147		132	139	148		134	140	149	
	1260	MBh	40.9	41.5	42.7		39.1	39.6	40.8		36.7	37.2	38.3		33.6	34.1	35.2		30.4	30.9	31.9		27.4	27.9	28.9	
		S/T	0.69	0.61	0.47		0.70	0.62	0.48		0.72	0.64	0.50		0.74	0.66	0.52		0.77	0.69	0.55		0.82	0.74	0.60	
		ΔT	22	20	16		21	19	15		20	18	15		19	17	14		18	17	13		19	17	14	
		kW	2.24	2.24	2.24		2.54	2.54	2.53		2.87	2.87	2.86		3.23	3.23	3.22		3.63	3.63	3.63		4.11	4.11	4.10	
		Amps	6.2	6.2	6.2		7.8	7.8	7.7		9.7	9.7	9.7		12.1	12.1	12.1		15.1	15.1	15.0		18.8	18.7	18.7	
		Hi PR	209	210	211		259	260	261		315	316	318		380	381	383		454	455	457		537	539	541	
		Lo PR	127	133	142		130	137	146		133	139	148		134	140	149		134	141	150		136	142	151	
	1450	MBh	41.7	42.2	43.4		39.8	40.4	41.5		37.4	37.9	39.0		34.3	34.8	35.9		31.0	31.5	32.6		28.1	28.5	29.5	
		S/T	0.73	0.65	0.51		0.73	0.66	0.52		0.76	0.68	0.54		0.78	0.70	0.56		0.81	0.73	0.59		0.86	0.78	0.64	
		ΔT	20	18	14		20	18	14		19	17	14		18	16	13		17	15	12		18	16	13	
		kW	2.26	2.25	2.25		2.55	2.55	2.55		2.88	2.88	2.88		3.25	3.24	3.24		3.65	3.65	3.64		4.13	4.12	4.12	
		Amps	6.2	6.2	6.2		7.8	7.8	7.8		9.8	9.8	9.7		12.2	12.2	12.1		15.1	15.1	15.1		18.8	18.8	18.8	
		Hi PR	211	212	213		261	262	264		318	319	320		383	384	386		457	458	460		540	541	543	
		Lo PR	129	136	145		133	140	149		135	142	151		136	143	152		136	143	152		138	144	153	
75	1070	MBh	40.3	40.9	42.1	43.9	38.5	39.0	40.2	42.0	36.1	36.6	37.7	39.4	33.1	33.6	34.7	36.3	29.9	30.3	31.4	33.0	26.9	27.4	28.4	29.9
		S/T	0.74	0.66	0.52	0.38	0.75	0.67	0.53	0.38	0.78	0.70	0.56	0.41	0.80	0.72	0.58	0.43	0.82	0.74	0.60	0.45	1.00	0.80	0.66	0.51
		ΔT	28	26	22	18	27	25	21	17	26	24	21	17	25	23	20	16	24	22	19	15	24	22	19	15
		kW	2.22	2.22	2.22	2.24	2.52	2.52	2.51	2.53	2.85	2.85	2.84	2.86	3.21	3.21	3.20	3.22	3.61	3.61	3.61	3.63	4.09	4.09	4.08	4.11
		Amps	6.2	6.2	6.1	6.2	7.7	7.7	7.7	7.8	9.6	9.6	9.6	9.7	12.0	12.0	12.0	12.1	15.0	15.0	14.9	15.0	18.7	18.6	18.6	18.7
		Hi PR	207	208	209	213	257	258	259	263	313	314	316	320	378	379	381	385	452	453	455	459	535	536	538	543
		Lo PR	125	131	140	152	128	135	144	156	131	137	146	158	132	138	147	159	132	139	148	159	134	140	149	160
	1260	MBh	40.9	41.5	42.7	44.5	39.1	39.7	40.8	42.6	36.7	37.2	38.3	40.0	33.6	**34.1**	35.2	36.9	30.4	30.9	31.9	33.5	27.5	27.9	28.9	28.9
		S/T	0.82	0.74	0.60	0.46	0.83	0.75	0.61	0.46	0.86	0.78	0.64	0.49	1.00	**0.80**	0.66	0.51	1.00	0.82	0.68	0.53	1.00	0.88	0.73	0.60
		ΔT	26	24	20	16	25	23	20	16	25	23	19	15	24	**22**	18	14	22	21	17	14	23	21	18	14
		kW	2.24	2.24	2.23	2.26	2.54	2.53	2.53	2.55	2.87	2.87	2.86	2.88	3.23	**3.23**	3.22	3.24	3.63	3.63	3.63	3.65	4.11	4.11	4.10	2.76
		Amps	6.2	6.2	6.2	6.2	7.8	7.8	7.7	7.8	9.7	9.7	9.7	9.8	12.1	**12.1**	12.1	12.2	15.1	15.0	15.0	15.1	18.7	18.7	18.7	11.9
		Hi PR	209	210	211	215	259	260	261	265	316	317	318	322	380	**382**	383	388	454	455	457	462	538	539	541	539
		Lo PR	127	133	142	154	130	137	146	158	133	139	148	160	134	**140**	149	161	134	141	150	161	136	142	151	165
	1450	MBh	41.7	42.3	43.5	45.3	39.9	40.4	41.6	43.3	37.4	37.9	39.0	40.8	34.3	34.8	35.9	37.6	31.1	31.5	32.6	34.2	28.1	28.6	28.1	29.5
		S/T	0.86	0.78	0.64	0.49	0.87	0.79	0.65	0.50	1.00	0.82	0.68	0.53	1.00	0.84	0.70	0.55	1.00	0.86	0.72	0.57	1.00	0.91	0.80	0.65
		ΔT	25	23	19	15	24	22	18	14	24	22	18	14	22	21	17	13	21	19	16	13	22	20	16	13
		kW	2.26	2.25	2.25	2.27	2.55	2.55	2.54	2.57	2.88	2.88	2.88	2.90	3.24	3.24	3.24	3.26	3.65	3.65	3.64	3.66	4.12	4.12	2.75	2.77
		Amps	6.2	6.2	6.2	6.3	7.8	7.8	7.8	7.8	9.8	9.8	9.7	9.8	12.2	12.1	12.1	12.2	15.1	15.1	15.1	15.2	18.8	18.8	11.9	11.9
		Hi PR	211	212	213	217	261	262	264	268	318	319	321	325	383	384	386	390	457	458	460	465	540	542	537	542
		Lo PR	129	136	145	157	133	140	149	161	135	142	151	163	136	143	152	164	136	143	152	164	138	145	155	167

IDB = Entering Indoor Dry Bulb Temperature

Shaded area is ACCA (TVA) conditions.

kW = Total system power

High and low pressures are measured at the liquid and suction service valves.

Amps = outdoor unit amps (comp.+fan)

Airflow may vary depending on actual ambient conditions and system operation modes.

			Outdoor Ambient Temperature																							
			65ºF				75ºF				85ºF				95ºF				105ºF				115ºF			
			Entering Indoor Wet Bulb Temperature																							
IDB	Airflow		59	63	67	71	59	63	67	71	59	63	67	71	59	63	67	71	59	63	67	71	59	63	67	71
80		MBh	40.5	41.1	42.3	44.1	38.7	39.3	40.4	42.2	36.3	36.8	37.9	39.6	33.3	33.8	34.9	36.5	30.0	30.5	31.6	33.1	27.1	27.6	28.6	30.1
		S/T	0.99	0.79	0.65	0.51	0.99	0.80	0.66	0.51	1.00	0.83	0.69	0.54	1.00	0.85	0.71	0.56	1.00	0.87	0.73	0.58	1.00	0.93	0.79	0.64
		ΔT	33	30	27	22	31	29	26	22	31	29	25	21	29	27	24	20	28	26	23	19	28	26	23	19
	1070	kW	2.22	2.22	2.22	2.24	2.52	2.52	2.51	2.53	2.85	2.85	2.84	2.87	3.21	3.21	3.20	3.23	3.62	3.61	3.61	3.63	4.09	4.09	4.08	4.11
		Amps	6.2	6.2	6.1	6.2	7.7	7.7	7.7	7.8	9.7	9.6	9.6	9.7	12.0	12.0	12.0	12.1	15.0	15.0	14.9	15.0	18.7	18.7	18.6	18.7
		Hi PR	207	208	209	213	257	258	260	263	314	315	316	320	378	379	381	386	452	453	455	460	535	536	538	543
		Lo PR	125	132	140	152	129	135	144	156	131	138	147	158	132	139	148	159	133	139	148	160	134	141	150	161
		MBh	41.1	41.7	42.9	44.7	39.3	39.9	41.0	42.8	36.9	37.4	38.5	40.2	33.8	34.3	**35.0**	37.1	30.6	31.1	32.1	33.7	27.6	28.1	29.1	29.0
		S/T	0.99	0.87	0.73	0.58	0.99	0.88	0.74	0.59	1.00	0.91	0.77	0.62	1.00	0.93	**0.79**	0.64	1.00	0.95	0.81	0.66	1.00	1.00	0.87	0.74
		ΔT	31	29	25	21	30	28	24	20	29	27	23	20	28	26	**22**	19	26	25	21	18	27	25	21	18
	1260	kW	2.24	2.24	2.23	2.26	2.54	2.54	2.53	2.55	2.87	2.87	2.86	2.88	3.23	3.23	**3.33**	3.24	3.63	3.63	3.63	3.65	4.11	4.11	4.10	2.76
		Amps	6.2	6.2	6.2	6.2	7.8	7.8	7.7	7.8	9.7	9.7	9.7	9.8	12.1	12.1	**13.4**	12.2	15.1	15.1	15.0	15.1	18.8	18.7	18.7	11.9
		Hi PR	209	210	212	215	259	260	262	266	316	317	319	323	381	382	**397**	388	455	456	458	462	538	539	541	540
		Lo PR	127	134	143	155	131	138	147	159	133	140	149	161	134	141	**152**	162	135	141	150	162	136	143	152	165
		MBh	41.9	42.5	43.7	45.5	40.1	40.6	41.8	43.5	37.6	38.1	39.2	40.9	34.5	35.0	36.1	37.7	31.2	31.7	32.8	34.3	28.3	28.7	28.2	29.7
		S/T	0.99	0.91	0.77	0.62	0.99	0.92	0.78	0.63	1.00	0.95	0.81	0.66	1.00	0.97	0.83	0.68	1.00	0.99	0.85	0.70	1.00	1.00	0.93	0.78
		ΔT	30	28	24	20	29	27	23	19	28	26	22	18	27	25	21	17	25	24	20	17	25	24	20	17
	1450	kW	2.26	2.25	2.25	2.27	2.55	2.55	2.55	2.57	2.88	2.88	2.88	2.90	3.24	3.24	3.24	3.26	3.65	3.65	3.64	3.66	4.13	4.12	2.76	2.77
		Amps	6.2	6.2	6.2	6.3	7.8	7.8	7.8	7.8	9.8	9.8	9.7	9.8	12.2	12.2	12.1	12.2	15.1	15.1	15.1	15.2	18.8	18.8	11.9	11.9
		Hi PR	211	212	214	217	262	263	264	268	318	319	321	325	383	384	386	391	457	459	460	465	541	542	538	543
		Lo PR	130	136	145	158	133	140	149	161	136	142	151	163	136	143	152	164	137	144	153	164	138	145	156	168
85		MBh	41.2	41.8	43.0	44.8	39.4	39.9	41.1	42.8	36.9	37.4	38.6	40.3	33.9	34.4	35.5	37.1	30.6	31.1	32.1	33.7	27.7	28.1	29.1	29.1
		S/T	0.99	0.90	0.76	0.61	0.99	0.99	0.77	0.62	1.00	1.00	0.79	0.64	1.00	1.00	0.81	0.67	1.00	1.00	0.84	0.69	1.00	1.00	0.89	0.77
		ΔT	37	35	31	27	35	33	30	26	34	33	29	25	33	31	27	24	31	30	26	23	31	30	26	22
	1070	kW	2.23	2.23	2.22	2.24	2.52	2.52	2.52	2.54	2.86	2.85	2.85	2.87	3.22	3.21	3.21	3.23	3.62	3.62	3.61	3.64	4.10	4.10	4.09	2.75
		Amps	6.2	6.2	6.2	6.2	7.7	7.7	7.7	7.8	9.7	9.7	9.6	9.7	12.1	12.0	12.0	12.1	15.0	15.0	15.0	15.1	18.7	18.7	18.7	11.8
		Hi PR	208	209	210	214	258	259	261	265	315	316	317	322	380	381	382	387	453	454	456	461	537	538	540	538
		Lo PR	127	134	142	154	131	137	146	158	133	140	149	160	134	141	149	161	134	141	150	162	136	143	151	165
		MBh	41.8	42.4	43.6	45.4	40.0	40.5	41.7	43.4	37.5	38.0	39.1	40.9	34.4	34.9	36.0	37.7	31.2	31.6	32.7	34.3	28.2	28.7	29.6	29.6
		S/T	0.99	0.99	0.84	0.69	0.99	0.99	0.84	0.70	1.00	1.00	0.87	0.72	1.00	1.00	0.89	0.74	1.00	1.00	0.92	0.77	1.00	1.00	0.97	0.85
		ΔT	30	29	25	22	30	28	25	21	29	28	24	21	28	27	23	20	28	26	23	19	28	26	23	20
	1260	kW	2.25	2.25	2.24	2.26	2.54	2.54	2.54	2.56	2.87	2.87	2.87	2.89	3.24	3.23	3.23	3.25	3.64	3.64	3.63	3.66	4.12	4.11	4.11	2.76
		Amps	6.2	6.2	6.2	6.2	7.8	7.8	7.8	7.8	9.7	9.7	9.7	9.8	12.1	12.1	12.1	12.2	15.1	15.1	15.1	15.2	18.8	18.8	18.7	11.9
		Hi PR	210	211	213	216	260	261	263	267	317	318	320	324	382	383	385	389	456	457	459	464	539	541	543	541
		Lo PR	133	140	149	162	135	142	151	163	135	142	151	163	134	141	149	161	132	139	147	159	131	137	146	157
		MBh	42.6	43.2	44.4	46.2	40.7	41.3	42.4	44.2	38.2	38.7	39.9	41.6	35.1	35.6	36.7	38.4	31.8	32.3	33.3	34.9	28.8	27.8	28.8	29.3
		S/T	0.99	0.99	0.88	0.73	0.99	0.99	0.88	0.74	1.00	1.00	0.91	0.76	1.00	1.00	0.93	0.78	1.00	1.00	0.96	0.81	1.00	1.00	1.00	0.91
		ΔT	34	32	28	24	33	31	27	23	32	30	26	22	30	28	25	21	29	27	24	20	29	26	23	20
	1450	kW	2.26	2.26	2.26	2.28	2.56	2.56	2.55	2.57	2.89	2.89	2.88	2.90	3.25	3.25	3.24	3.27	3.66	3.65	3.65	3.67	4.13	2.76	2.76	2.61
		Amps	6.2	6.2	6.2	6.3	7.8	7.8	7.8	7.9	9.8	9.8	9.8	9.8	12.2	12.2	12.2	12.2	15.2	15.1	15.1	15.2	18.9	11.9	11.9	11.3
		Hi PR	212	213	215	218	263	264	265	269	320	321	322	326	385	386	387	392	459	460	462	466	542	537	539	540
		Lo PR	132	138	148	160	135	142	151	163	137	144	153	165	138	145	154	166	139	145	154	166	140	149	158	171

IDB = Entering Indoor Dry Bulb Temperature

Shaded ares is AHRI contitions.

kW = Total system power

High and low pressures are measured at the liquid and suction service valves.

Amps = outdoor unit amps (comp.+fan)

Airflow may vary depending on actual ambient conditions and system operation modes.

IDB	Airflow		Outdoor Ambient Temperature																							
			65ºF				75ºF				85ºF				95ºF				105ºF				115ºF			
			Entering Indoor Wet Bulb Temperature																							
			59	63	67	71	59	63	67	71	59	63	67	71	59	63	67	71	59	63	67	71	59	63	67	71
70	1170	MBh	26.7	40.2	51.5		35.1	48.8	50.2		46.0	46.7	48.1		43.1	43.8	45.2		39.8	40.5	41.9		32.5	33.1	34.3	
		S/T	0.65	0.51	0.36		0.60	0.49	0.36		0.59	0.51	0.39		0.60	0.53	0.40		0.63	0.55	0.43		0.69	0.61	0.48	
		ΔT	21	21	16		22	19	15		21	19	15		20	18	15		20	18	14		22	20	16	
		kW	1.48	2.28	3.26		2.27	3.69	3.69		4.17	4.16	4.15		4.67	4.67	4.66		5.23	5.22	5.22		4.98	4.98	4.97	
		Amps	6.0	9.1	12.8		9.1	14.4	14.4		16.2	16.2	16.2		18.2	18.1	18.1		20.3	20.3	20.3		19.3	19.3	19.3	
		Hi PR	257	270	285		307	328	330		374	375	377		424	425	427		478	480	481		522	524	526	
		Lo PR	119	119	124		120	122	130		119	127	135		123	130	139		126	134	143		132	139	149	
	1380	MBh	28.9	44.3	52.3		39.2	49.5	51.0		46.8	47.4	48.9		43.8	44.5	45.9		40.6	41.2	42.6		33.1	33.7	34.9	
		S/T	0.70	0.57	0.43		0.66	0.56	0.43		0.66	0.59	0.46		0.68	0.60	0.48		0.70	0.62	0.50		0.76	0.69	0.56	
		ΔT	20	19	14		21	18	14		19	18	14		19	17	14		18	16	13		21	19	15	
		kW	1.59	2.56	3.29		2.57	3.72	3.71		4.19	4.19	4.18		4.70	4.69	4.69		5.25	5.25	5.24		5.01	5.00	5.00	
		Amps	6.5	10.2	12.9		10.2	14.5	14.5		16.3	16.3	16.3		18.3	18.3	18.2		20.4	20.4	20.4		19.4	19.4	19.4	
		Hi PR	261	277	288		314	331	333		377	378	380		427	428	430		481	482	484		525	526	528	
		Lo PR	120	120	127		120	124	133		121	129	137		125	132	141		128	136	145		133	141	151	
	1590	MBh	33.3	51.7	53.2		45.5	50.4	51.9		47.7	48.4	49.8		44.8	45.4	46.8		41.4	42.1	43.5		33.9	34.5	35.7	
		S/T	0.71	0.59	0.46		0.68	0.60	0.47		0.69	0.62	0.49		0.71	0.64	0.51		0.73	0.66	0.53		0.80	0.72	0.59	
		ΔT	19	17	13		20	16	13		18	16	13		18	16	12		17	15	12		19	17	14	
		kW	1.81	3.32	3.31		3.09	3.74	3.74		4.22	4.21	4.21		4.72	4.72	4.71		5.28	5.27	5.27		5.03	5.02	5.02	
		Amps	7.4	13.0	13.0		12.1	14.6	14.6		16.4	16.4	16.4		18.4	18.3	18.3		20.5	20.5	20.5		19.5	19.5	19.4	
		Hi PR	267	289	291		324	334	336		379	381	383		430	431	433		484	485	487		528	529	531	
		Lo PR	120	120	129		119	126	135		123	131	140		127	135	144		130	138	147		135	144	153	
75	1170	MBh	26.7	40.2	51.5	53.8	35.1	48.8	50.2	52.5	46.0	46.7	48.1	50.3	43.1	43.8	45.2	47.4	39.9	40.5	41.9	44.0	32.5	33.1	34.3	36.1
		S/T	0.79	0.64	0.48	0.34	0.73	0.61	0.48	0.35	0.71	0.64	0.51	0.37	0.73	0.65	0.53	0.39	0.75	0.68	0.55	0.41	0.81	0.74	0.61	0.47
		ΔT	25	25	20	16	26	23	20	16	25	23	20	16	24	22	19	15	24	22	18	15	26	24	21	17
		kW	1.48	2.27	3.26	3.29	2.27	3.69	3.68	3.72	4.16	4.16	4.15	4.19	4.67	4.66	4.65	4.69	5.22	5.22	5.21	5.25	4.98	4.98	4.97	5.00
		Amps	6.0	9.1	12.8	12.9	9.1	14.4	14.4	14.5	16.2	16.2	16.2	16.3	18.1	18.1	18.1	18.2	20.3	20.3	20.3	20.4	19.3	19.3	19.3	19.4
		Hi PR	257	270	286	291	308	328	330	335	374	375	377	382	424	425	427	432	479	480	482	487	523	524	526	531
		Lo PR	119	119	124	135	120	122	130	141	119	127	135	146	123	130	139	150	126	134	143	154	132	139	149	160
	1380	MBh	28.9	44.3	52.3	54.5	39.2	49.5	51.0	53.2	46.8	47.5	48.9	51.1	43.9	**44.5**	45.9	48.1	40.6	41.2	42.6	44.7	33.1	33.7	34.9	36.7
		S/T	0.84	0.70	0.55	0.41	0.79	0.68	0.56	0.42	0.78	0.71	0.58	0.44	0.80	**0.73**	0.60	0.46	0.82	0.75	0.62	0.48	1.00	0.81	0.68	0.54
		ΔT	24	24	19	15	25	22	18	15	24	22	18	15	23	**21**	18	14	22	20	17	14	25	23	19	16
		kW	1.58	2.56	3.29	3.32	2.57	3.72	3.71	3.75	4.19	4.19	4.18	4.21	4.69	**4.69**	4.68	4.72	5.25	5.25	5.24	5.27	5.00	5.00	5.00	5.02
		Amps	6.5	10.2	12.9	13.0	10.2	14.5	14.5	14.6	16.3	16.3	16.3	16.4	18.3	**18.2**	18.2	18.3	20.4	20.4	20.4	20.5	19.4	19.4	19.4	19.5
		Hi PR	261	278	289	294	314	331	333	338	377	378	380	385	427	**428**	430	435	481	483	485	490	526	527	529	533
		Lo PR	120	120	127	137	120	124	133	143	121	129	137	148	125	**132**	141	152	128	136	145	156	133	141	151	162
	1590	MBh	33.3	51.8	53.2	55.5	45.6	50.5	51.9	54.1	47.7	48.4	49.8	52.0	44.8	45.4	46.8	49.0	41.5	42.1	43.5	45.6	33.9	34.5	35.7	37.5
		S/T	0.84	0.71	0.59	0.45	0.81	0.72	0.59	0.46	0.81	0.74	0.61	0.48	0.83	0.76	0.63	0.50	0.85	0.78	0.65	0.52	1.00	0.85	0.72	0.58
		ΔT	24	21	17	14	24	21	17	13	22	21	17	13	22	20	16	13	21	19	16	12	24	22	18	14
		kW	1.81	3.32	3.31	3.35	3.09	3.74	3.73	3.77	4.21	4.21	4.20	4.24	4.72	4.71	4.71	4.74	5.27	5.27	5.26	5.30	5.02	5.02	5.01	5.04
		Amps	7.4	13.0	13.0	13.1	12.1	14.6	14.6	14.7	16.4	16.4	16.4	16.5	18.3	18.3	18.3	18.4	20.5	20.5	20.5	20.6	19.5	19.5	19.4	19.5
		Hi PR	267	289	291	296	324	334	336	341	380	381	383	388	430	431	433	438	484	485	487	492	528	529	531	536
		Lo PR	120	120	129	140	120	126	135	146	123	131	140	151	127	135	144	155	130	138	147	159	135	144	153	165

IDB = Entering Indoor Dry Bulb Temperature

Shaded area is ACCA (TVA) conditions.

kW = Total system power

High and low pressures are measured at the liquid and suction service valves.

Amps = outdoor unit amps (comp.+fan)

Airflow may vary depending on actual ambient conditions and system operation modes.

			OUTDOOR AMBIENT TEMPERATURE																							
			65ºF				75ºF				85ºF				95ºF				105ºF				115ºF			
			ENTERING INDOOR WET BULB TEMPERATURE																							
IDB	AIRFLOW		59	63	67	71	59	63	67	71	59	63	67	71	59	63	67	71	59	63	67	71	59	63	67	71
80	1170	MBh	26.9	40.4	51.8	54.0	36.6	49.0	50.5	52.7	46.3	47.0	48.4	50.6	43.4	44.1	45.5	47.6	40.1	40.8	42.1	44.2	32.7	33.3	34.5	36.3
		S/T	0.92	0.76	0.60	0.46	0.84	0.73	0.60	0.47	0.83	0.75	0.63	0.49	1.00	0.77	0.64	0.51	1.00	0.79	0.67	0.53	1.00	0.86	0.73	0.59
		ΔT	29	30	24	21	31	28	24	20	29	27	24	20	28	27	23	20	28	26	22	19	31	29	25	21
		kW	1.48	2.28	3.26	3.30	2.37	3.69	3.69	3.72	4.17	4.16	4.15	4.19	4.67	4.66	4.66	4.69	5.23	5.22	5.22	5.25	4.98	4.98	4.97	5.00
		Amps	6.0	9.1	12.8	12.9	9.5	14.4	14.4	14.5	16.2	16.2	16.2	16.3	18.2	18.1	18.1	18.2	20.3	20.3	20.3	20.4	19.3	19.3	19.3	19.4
		Hi PR	258	271	286	291	310	329	331	336	374	376	378	383	425	426	428	433	479	480	482	487	523	524	526	531
		Lo PR	120	120	125	136	119	122	131	142	120	127	136	147	123	131	140	151	127	134	143	155	132	140	149	161
	1380	MBh	29.1	46.7	52.5	54.8	41.0	49.8	51.2	53.5	47.0	47.7	49.1	51.3	44.1	44.8	**46.5**	48.3	40.8	41.5	42.9	45.0	33.4	33.9	35.1	36.9
		S/T	0.97	0.81	0.67	0.53	0.90	0.80	0.67	0.54	0.90	0.83	0.70	0.56	1.00	0.84	**0.72**	0.58	1.00	0.86	0.74	0.60	1.00	0.93	0.80	0.66
		ΔT	29	29	23	19	30	26	22	19	28	26	22	19	27	25	**22**	18	26	24	21	18	29	27	24	20
		kW	1.59	2.73	3.29	3.32	2.71	3.72	3.71	3.75	4.19	4.19	4.18	4.22	4.70	4.69	**4.65**	4.72	5.25	5.25	5.24	5.28	5.01	5.00	5.00	5.02
		Amps	6.5	10.8	12.9	13.0	10.7	14.5	14.5	14.6	16.3	16.3	16.3	16.4	18.3	18.3	**18.8**	18.4	20.4	20.4	20.4	20.5	19.4	19.4	19.4	19.5
		Hi PR	262	280	289	294	317	332	334	339	377	379	381	385	428	429	**428**	436	482	483	485	490	526	527	529	534
		Lo PR	120	119	127	138	120	124	133	144	122	129	138	149	125	133	**143**	153	129	136	146	157	134	142	151	163
	1590	MBh	35.7	52.0	53.5	55.7	50.0	50.7	52.2	54.4	48.0	48.6	50.1	52.2	45.0	45.7	47.1	49.2	41.7	42.4	43.7	45.8	34.1	34.7	35.9	37.7
		S/T	0.96	0.83	0.70	0.57	0.91	0.84	0.71	0.57	1.00	0.86	0.73	0.60	1.00	0.88	0.75	0.62	1.00	0.90	0.77	0.64	1.00	0.97	0.84	0.70
		ΔT	28	25	22	18	27	25	21	18	27	25	21	18	26	24	21	17	25	23	20	16	28	26	22	19
		kW	1.94	3.32	3.31	3.35	3.75	3.74	3.74	3.77	4.22	4.21	4.20	4.24	4.72	4.71	4.71	4.74	5.28	5.27	5.27	5.30	5.02	5.02	5.02	5.04
		Amps	7.9	13.0	13.0	13.1	14.6	14.6	14.6	14.7	16.4	16.4	16.4	16.5	18.4	18.3	18.3	18.4	20.5	20.5	20.5	20.6	19.5	19.5	19.4	19.5
		Hi PR	270	290	292	297	333	335	337	341	380	381	383	388	430	432	434	439	485	486	488	493	529	530	532	537
		Lo PR	119	121	129	140	119	127	135	146	124	131	140	151	127	135	144	155	131	139	148	159	136	144	154	165
85	1170	MBh	29.1	44.6	52.6	54.9	41.0	49.9	51.3	53.5	47.1	47.8	49.2	51.4	44.2	44.8	46.2	48.4	40.9	41.5	42.9	45.0	33.4	34.0	35.2	37.0
		S/T	1.00	0.85	0.69	0.56	1.00	0.83	0.70	0.56	1.00	0.85	0.72	0.59	1.00	0.87	0.74	0.61	1.00	1.00	0.76	0.63	1.00	1.00	0.83	0.69
		ΔT	34	34	28	24	35	31	28	24	33	31	27	24	32	30	27	23	31	29	26	22	34	32	29	25
		kW	1.58	2.55	3.27	3.31	2.69	3.70	3.69	3.73	4.17	4.17	4.16	4.20	4.68	4.67	4.67	4.70	5.23	5.23	5.22	5.26	4.99	4.99	4.98	5.01
		Amps	6.4	10.1	12.8	12.9	10.7	14.4	14.4	14.6	16.3	16.2	16.2	16.3	18.2	18.2	18.1	18.3	20.3	20.3	20.3	20.4	19.3	19.3	19.3	19.4
		Hi PR	260	277	288	292	315	330	332	337	376	377	379	384	426	427	429	434	480	482	484	489	525	526	528	532
		Lo PR	120	120	127	137	119	124	133	144	121	129	138	149	125	133	142	153	128	136	145	156	134	142	151	162
	MBH	33.4	51.9	53.4	55.6	45.7	50.6	52.1	54.3	47.8	48.5	49.9	52.1	44.9	45.6	47.0	49.1	41.6	42.2	43.6	45.7	34.0	34.6	35.8	37.6	37.6
		S/T	1.00	0.89	0.76	0.63	1.00	0.90	0.77	0.63	1.00	0.92	0.79	0.66	1.00	0.94	0.81	0.68	1.00	1.00	0.83	0.70	1.00	1.00	0.90	0.76
		ΔT	33	30	27	23	34	30	26	23	31	30	26	22	31	29	25	22	30	28	25	21	33	31	27	24
		kW	1.80	3.31	3.30	3.33	3.08	3.73	3.72	3.76	4.20	4.20	4.19	4.22	4.70	4.70	4.69	4.73	5.26	5.26	5.25	5.28	5.01	5.01	5.00	5.03
		Amps	7.3	13.0	12.9	13.1	12.1	14.6	14.5	14.7	16.4	16.4	16.3	16.5	18.3	18.3	18.3	18.4	20.5	20.4	20.4	20.5	19.4	19.4	19.4	19.5
		Hi PR	267	288	290	295	323	333	335	340	379	380	382	387	429	430	432	437	483	485	486	491	527	529	530	535
		Lo PR	120	123	131	142	121	128	137	148	125	133	142	153	129	137	146	157	132	140	150	161	137	146	155	167
	1590	MBh	39.5	52.8	54.3	56.6	50.9	51.5	53.0	55.2	48.8	49.4	50.9	53.0	45.8	46.5	47.9	50.0	42.5	43.1	44.5	46.6	34.8	35.4	36.6	38.4
		S/T	1.00	0.93	0.80	0.66	1.00	0.93	0.80	0.67	1.00	0.96	0.83	0.69	1.00	1.00	0.85	0.71	1.00	1.00	0.87	0.73	1.00	1.00	0.94	0.80
		ΔT	33	29	26	22	31	29	25	21	30	28	25	21	30	28	24	21	29	27	24	20	32	30	26	22
		kW	2.15	3.33	3.32	3.36	3.76	3.75	3.74	3.78	4.22	4.22	4.21	4.25	4.73	4.72	4.72	4.75	5.28	5.28	5.27	5.31	5.03	5.03	5.02	5.05
		Amps	8.7	13.0	13.0	13.2	14.7	14.7	14.6	14.8	16.5	16.4	16.4	16.6	18.4	18.4	18.3	18.5	20.5	20.5	20.5	20.6	19.5	19.5	19.5	19.6
		Hi PR	274	291	293	298	335	336	338	343	381	383	385	390	432	433	435	440	486	487	489	494	530	531	533	538
		Lo PR	120	123	131	142	121	128	137	148	125	133	142	153	129	137	146	157	132	140	150	161	137	146	155	167

IDB = Entering Indoor Dry Bulb Temperature

Shaded ares is AHRI contitions.

kW = Total system power

High and low pressures are measured at the liquid and suction service valves.

Amps = outdoor unit amps (comp.+fan)

Airflow may vary depending on actual ambient conditions and system operation modes.

IDB	Airflow		Outdoor Ambient Temperature																							
			65ºF				75ºF				85ºF				95ºF				105ºF				115ºF			
			Entering Indoor Wet Bulb Temperature																							
			59	63	67	71	59	63	67	71	59	63	67	71	59	63	67	71	59	63	67	71	59	63	67	71
1390	MBh	36.4	43.9	53.4		45.4	52.0	58.5		53.4	56.0	57.7		53.2	54.0	55.7		50.5	51.4	53.1		44.0	44.8	44.4		-
		S/T	0.65	0.53	0.37		0.61	0.51	0.36		0.60	0.51	0.38		0.59	0.52	0.40		0.61	0.54	0.42		0.69	0.61	0.49	
		ΔT	20	19	16		21	19	16		22	20	16		21	20	16		21	19	15		21	19	16	
		kW	1.94	2.46	3.17		2.95	3.56	4.54		4.39	5.10	5.09		5.69	5.68	5.67		6.33	6.33	6.32		5.52	5.52	5.11	
		Amps	7.7	9.5	11.9		11.4	13.5	17.0		16.7	19.4	19.4		22.0	22.0	22.0		25.0	24.9	24.9		22.1	22.1	20.5	
		Hi PR	249	260	272		305	314	318		366	363	365		413	414	416		469	470	472		527	528	524	
		Lo PR	120	119	121		120	120	122		119	120	127		121	124	130		124	127	134		133	136	145	
	1640	MBh	40.6	46.7	59.8		49.8	55.9	59.4		56.6	56.8	58.6		54.1	54.9	56.6		51.4	52.3	54.0		42.9	43.6	45.2	
		S/T	0.71	0.60	0.44		0.67	0.58	0.43		0.66	0.58	0.45		0.66	0.59	0.47		0.68	0.61	0.49		0.77	0.69	0.56	
		ΔT	19	18	15		20	18	15		20	19	15		20	18	14		19	18	14		19	18	14	
		kW	2.22	2.66	3.81		3.34	3.94	4.57		4.80	5.13	5.12		5.72	5.72	5.71		6.37	6.36	6.35		5.15	5.14	5.14	
		Amps	8.7	10.1	14.1		12.7	14.8	17.1		18.3	19.5	19.5		22.2	22.1	22.1		25.1	25.1	25.0		20.6	20.6	20.6	
		Hi PR	258	265	282		313	322	321		373	366	368		416	417	419		472	473	475		524	525	527	
		Lo PR	120	120	119		120	120	124		120	122	129		122	126	132		126	129	136		136	140	147	
	1890	MBh	44.8	51.3	60.3		53.0	58.8	60.5		57.1	58.0	59.7		55.2	56.0	57.7		52.6	53.4	55.2		43.9	44.6	42.8	
		S/T	0.73	0.63	0.46		0.70	0.59	0.47		0.68	0.61	0.49		0.70	0.63	0.50		0.72	0.65	0.52		0.81	0.73	0.61	
		ΔT	18	17	14		19	17	14		19	17	14		19	17	13		18	16	13		18	17	13	
		kW	2.50	3.01	4.10		3.61	4.61	4.60		5.16	5.16	5.15		5.75	5.74	5.73		6.39	6.39	6.38		5.17	5.16	4.57	
		Amps	9.6	11.3	15.1		13.7	17.2	17.2		19.7	19.6	19.6		22.3	22.3	22.2		25.2	25.2	25.2		20.7	20.7	18.3	
		Hi PR	264	273	279		319	321	323		368	369	371		419	420	422		475	476	478		526	528	521	
		Lo PR	120	120	121		121	120	126		121	124	131		124	128	134		128	131	138		138	142	152	

1390	MBh	36.4	43.9	53.4	60.9	45.5	52.0	58.5	61.1	53.4	56.0	57.7	60.3	53.2	54.0	55.8	58.4	50.6	51.4	53.2	55.8	44.1	44.8	44.4	46.8	27.3
		S/T	0.79	0.67	0.50	0.34	0.74	0.64	0.48	0.35	0.72	0.63	0.50	0.37	0.71	0.64	0.52	0.39	0.73	0.66	0.54	0.40	0.81	0.74	0.61	0.48
		ΔT	24	23	21	17	25	24	21	17	26	25	21	17	26	24	20	16	25	23	20	16	25	23	20	16
		kW	1.94	2.46	3.17	4.07	2.95	3.56	4.53	4.57	4.38	5.09	5.08	5.12	5.68	5.68	5.67	5.71	6.33	6.33	6.32	6.36	5.52	5.51	5.11	5.14
		Amps	7.6	9.5	11.9	15.0	11.4	13.5	16.9	17.1	16.7	19.4	19.3	19.5	22.0	22.0	22.0	22.1	24.9	24.9	24.9	25.1	22.1	22.1	20.5	20.6
		Hi PR	250	260	272	278	305	315	318	323	366	363	365	370	414	415	417	421	469	470	472	477	527	528	524	529
		Lo PR	120	119	121	126	120	120	122	132	119	121	127	137	121	124	130	140	124	127	134	144	133	136	145	156
	1640	MBh	40.6	46.7	59.8	61.8	49.8	55.9	59.4	62.0	56.6	56.9	58.6	61.2	54.1	**54.9**	56.6	59.3	51.5	52.3	54.1	56.7	42.9	43.7	45.2	44.1
		S/T	0.84	0.73	0.56	0.41	0.80	0.70	0.55	0.42	0.79	0.70	0.57	0.44	0.78	**0.71**	0.59	0.46	0.80	0.73	0.60	0.47	0.99	0.82	0.69	0.56
		ΔT	23	22	19	16	24	23	19	15	25	23	19	15	24	**22**	19	15	24	22	18	14	23	22	18	14
		kW	2.22	2.66	3.81	4.11	3.34	3.94	4.57	4.61	4.80	5.13	5.12	5.16	5.72	**5.71**	5.70	5.74	6.36	6.36	6.35	6.39	5.15	5.14	5.14	4.57
		Amps	8.6	10.1	14.1	15.1	12.7	14.8	17.1	17.3	18.3	19.5	19.5	19.7	22.2	**22.1**	22.1	22.3	25.1	25.1	25.0	25.2	20.6	20.6	20.6	18.4
		Hi PR	258	266	282	281	313	322	321	326	373	366	368	373	416	**418**	420	424	472	473	475	480	524	525	527	523
		Lo PR	120	120	119	128	120	120	124	134	120	122	129	139	122	**126**	132	142	126	129	136	146	136	140	147	161
	1890	MBh	44.8	51.3	60.3	62.9	53.1	58.8	60.5	63.1	57.2	58.0	59.7	62.3	55.2	56.0	57.8	60.4	52.6	53.4	55.2	57.9	43.9	44.7	42.9	45.0
		S/T	0.86	0.76	0.58	0.45	0.82	0.71	0.59	0.45	0.81	0.73	0.61	0.47	0.82	0.75	0.62	0.49	0.83	0.76	0.64	0.51	0.99	0.86	0.74	0.60
		ΔT	23	21	18	14	23	22	18	14	24	22	18	14	23	21	18	14	23	21	17	13	22	21	17	13
		kW	2.50	3.00	4.09	4.14	3.61	4.60	4.59	4.64	5.16	5.15	5.14	5.19	5.74	5.74	5.73	5.77	6.39	6.39	6.38	6.42	5.16	5.16	4.56	4.59
		Amps	9.6	11.3	15.1	15.2	13.7	17.2	17.2	17.4	19.7	19.6	19.6	19.8	22.3	22.2	22.2	22.4	25.2	25.2	25.1	25.3	20.7	20.7	18.3	18.4
		Hi PR	265	273	279	284	319	322	324	328	368	369	371	376	419	420	422	427	475	476	478	483	527	528	521	526
		Lo PR	120	120	121	130	121	120	126	136	121	125	131	141	125	128	134	144	128	131	138	148	138	142	152	163

IDB = Entering Indoor Dry Bulb Temperature

Shaded area is ACCA (TVA) conditions.

kW = Total system power

High and low pressures are measured at the liquid and suction service valves.

Amps = outdoor unit amps (comp.+fan)

Airflow may vary depending on actual ambient conditions and system operation modes.

			OUTDOOR AMBIENT TEMPERATURE																							
			65ºF				75ºF				85ºF				95ºF				105ºF				115ºF			
			ENTERING INDOOR WET BULB TEMPERATURE																							
IDB	AIRFLOW		59	63	67	71	59	63	67	71	59	63	67	71	59	63	67	71	59	63	67	71	59	63	67	71
80	1390	MBh	39.2	44.1	56.8	61.2	45.7	52.3	58.8	61.4	53.7	56.3	58.0	60.6	53.5	54.3	56.1	58.7	50.9	51.7	53.5	56.1	44.3	45.1	44.7	43.6
		S/T	0.90	0.80	0.62	0.46	0.86	0.76	0.60	0.46	0.84	0.75	0.62	0.49	0.83	0.76	0.63	0.50	0.99	0.78	0.65	0.52	0.99	0.86	0.74	0.61
		ΔT	29	28	25	22	29	28	25	21	30	29	25	21	30	28	25	21	29	28	24	20	29	27	24	20
		kW	2.13	2.46	3.48	4.08	2.95	3.56	4.53	4.58	4.39	5.09	5.09	5.13	5.69	5.68	5.67	5.71	6.33	6.33	6.32	6.36	5.52	5.52	5.11	4.55
		Amps	8.3	9.5	12.9	15.0	11.4	13.5	17.0	17.1	16.7	19.4	19.4	19.5	22.0	22.0	22.0	22.1	24.9	24.9	24.9	25.1	22.1	22.1	20.5	18.3
		Hi PR	254	261	277	279	306	315	319	323	366	364	366	371	414	415	417	422	470	471	473	478	527	528	525	521
		Lo PR	119	120	119	127	121	121	123	132	120	121	127	137	121	124	131	141	124	128	134	144	133	137	145	159
	1640	MBh	43.0	46.9	60.1	62.1	52.3	56.2	59.7	62.3	56.4	57.2	58.9	61.5	54.4	55.2	**57.0**	59.6	51.8	52.6	54.4	57.0	43.2	43.9	45.5	44.4
		S/T	0.96	0.86	0.68	0.53	0.91	0.82	0.67	0.54	0.89	0.82	0.69	0.56	1.00	0.83	**0.70**	0.57	0.99	0.85	0.72	0.59	0.99	0.94	0.81	0.69
		ΔT	28	26	24	20	29	27	24	20	29	27	24	20	29	27	**23**	19	28	26	22	19	28	26	22	18
		kW	2.39	2.66	3.81	4.11	3.59	3.94	4.57	4.61	5.13	5.13	5.12	5.16	5.72	5.72	**5.70**	5.75	6.37	6.36	6.35	6.39	5.15	5.14	5.14	4.57
		Amps	9.2	10.1	14.1	15.1	13.6	14.8	17.1	17.3	19.5	19.5	19.5	19.7	22.2	22.1	**22.1**	22.3	25.1	25.1	25.0	25.2	20.6	20.6	20.6	18.4
		Hi PR	261	266	283	281	317	323	321	326	366	367	369	373	417	418	**420**	425	473	474	476	481	524	526	528	524
		Lo PR	119	121	120	129	119	121	125	134	119	123	129	139	123	126	**133**	143	126	130	136	146	137	141	147	161
	1890	MBh	47.2	53.9	60.6	63.2	56.5	59.1	60.8	63.4	57.5	58.3	60.0	62.6	55.5	56.3	58.1	60.7	52.9	53.7	55.5	58.2	44.2	44.9	43.1	45.3
		S/T	0.98	0.87	0.70	0.57	0.93	0.83	0.71	0.57	0.92	0.85	0.72	0.59	1.00	0.86	0.74	0.61	0.99	0.88	0.76	0.62	0.99	0.98	0.87	0.72
		ΔT	27	26	23	19	28	26	23	19	28	26	23	19	28	26	22	18	27	25	21	18	26	25	21	17
		kW	2.68	3.23	4.10	4.14	3.97	4.61	4.60	4.64	5.16	5.16	5.15	5.19	5.75	5.74	5.73	5.77	6.39	6.39	6.38	6.42	5.17	5.16	4.57	4.59
		Amps	10.2	12.1	15.1	15.3	14.9	17.2	17.2	17.4	19.7	19.6	19.6	19.8	22.3	22.3	22.2	22.4	25.2	25.2	25.1	25.3	20.7	20.7	18.3	18.4
		Hi PR	268	276	279	284	324	322	324	329	368	369	371	376	420	421	423	428	475	477	479	483	527	528	522	526
		Lo PR	120	119	121	131	119	121	127	137	122	125	131	141	125	128	135	145	128	132	138	148	139	143	152	163
85	1390	MBh	40.9	47.0	60.2	62.2	50.1	56.2	59.8	62.4	56.4	57.3	59.0	61.6	54.5	55.3	57.0	59.7	51.9	52.7	54.4	57.1	45.3	44.0	45.5	44.4
		S/T	1.00	0.89	0.71	0.56	1.00	0.85	0.69	0.56	1.00	0.84	0.71	0.58	1.00	0.85	0.73	0.60	0.99	0.87	0.74	0.61	0.99	0.99	0.83	0.71
		ΔT	33	32	29	26	34	32	29	25	35	33	29	25	34	32	28	25	33	31	28	24	33	31	27	23
		kW	2.21	2.64	3.79	4.09	3.33	3.92	4.54	4.59	5.11	5.10	5.10	5.14	5.70	5.69	5.68	5.72	6.34	6.34	6.33	6.37	5.53	5.13	5.12	4.56
		Amps	8.6	10.1	14.0	15.0	12.7	14.8	17.0	17.2	19.5	19.4	19.4	19.6	22.1	22.0	22.0	22.2	25.0	25.0	24.9	25.1	22.1	20.6	20.5	18.3
		Hi PR	257	265	281	280	312	321	320	325	364	365	367	372	415	417	418	423	471	472	474	479	529	524	526	522
		Lo PR	120	120	119	128	120	120	124	134	119	123	129	139	123	126	132	142	126	129	136	146	135	140	147	161
	1640	MBh	44.9	51.4	60.5	63.0	53.2	59.0	60.7	63.3	57.3	58.1	59.9	62.5	55.4	56.2	57.9	60.6	52.8	53.6	55.4	58.0	44.1	44.8	46.3	45.2
		S/T	1.00	0.94	0.76	0.63	1.00	0.89	0.76	0.63	1.00	0.91	0.78	0.65	1.00	0.92	0.80	0.67	0.99	0.94	0.81	0.68	0.99	0.99	0.91	0.79
		ΔT	32	31	28	24	33	32	28	24	33	31	28	24	33	31	27	23	32	30	26	23	31	29	26	22
		kW	2.49	2.99	4.08	4.12	3.60	4.59	4.58	4.62	5.14	5.14	5.13	5.17	5.73	5.73	5.72	5.76	6.38	6.37	6.36	6.40	5.15	5.15	5.14	4.58
		Amps	9.6	11.3	15.0	15.2	13.7	17.2	17.1	17.3	19.6	19.6	19.5	19.7	22.2	22.2	22.1	22.3	25.1	25.1	25.1	25.2	20.7	20.7	20.6	18.4
		Hi PR	264	272	278	283	318	321	323	327	367	368	370	375	418	419	421	426	474	475	477	482	526	527	529	525
		Lo PR	120	120	121	130	121	120	126	136	121	124	131	141	124	128	134	144	128	131	138	148	138	142	149	163
	1890	MBh	47.9	54.8	61.6	64.1	59.9	60.1	61.8	64.3	58.4	59.3	61.0	63.6	56.5	57.3	59.0	61.7	53.9	54.7	56.5	59.2	45.1	42.5	43.9	46.1
		S/T	1.00	0.97	0.80	0.66	1.00	0.93	0.80	0.67	1.00	0.95	0.82	0.69	1.00	0.96	0.83	0.70	0.99	0.97	0.85	0.72	0.99	0.99	0.97	0.82
		ΔT	31	30	27	23	32	30	27	23	32	30	26	23	31	29	26	22	31	29	25	21	30	28	24	21
		kW	2.69	3.23	4.11	4.15	4.33	4.62	4.61	4.65	5.17	5.17	5.16	5.20	5.76	5.75	5.74	5.78	6.40	6.40	6.39	6.43	5.17	4.58	4.57	4.60
		Amps	10.3	12.1	15.1	15.3	16.2	17.3	17.3	17.4	19.7	19.7	19.6	19.8	22.3	22.3	22.3	22.4	25.2	25.2	25.2	25.4	20.7	18.4	18.4	18.5
		Hi PR	269	277	281	285	329	323	325	330	370	371	373	377	421	422	424	429	477	478	480	485	528	521	523	528
		Lo PR	121	121	123	133	119	122	128	138	123	127	133	143	127	130	137	147	130	133	140	150	141	147	154	165

IDB = Entering Indoor Dry Bulb Temperature

Shaded ares is AHRI contitions.

kW = Total system power

High and low pressures are measured at the liquid and suction service valves.

Amps = outdoor unit amps (comp.+fan)

Airflow may vary depending on actual ambient conditions and system operation modes.

GXV9SA2410A* / AHVE36CP1300A* Design Subcooling @ AHRI 95 °F Conditions, 13-15 °F - 100 % Demand				
Outdoor Temp. °F	**Total BTU/h**	**Sensible BTU/h**	**Latent BTU/h**	**Total Watts**
75°	26,000	18,500	7,500	1,720
80°	25,400	18,300	7,100	1,815
85°	24,700	18,000	6,700	1,910
90°	24,000	17,700	6,300	2,010
95°	**23,200**	**17,400**	**5,800**	**2,110**
100°	22,200	17,000	5,200	2,220
105°	21,100	16,500	4,600	2,330
110°	20,300	16,400	3,900	2,460
115°	19,400	16,300	3,100	2,590
TVA Conditions @ 95° OD DB, 75° ID, 63° ID WB				
95°	**22,200**	**17,100**	**5,100**	**2,110**

GXV9SA2410A* / AHVE36CP1300A* Design Subcooling @ AHRI 95 °F Conditions, 13-15 °F - Boost Mode				
Outdoor Temp. °F	**Total BTU/h**	**Sensible BTU/h**	**Latent BTU/h**	**Total Watts**
75°	33,600	22,200	11,400	2,200
80°	32,800	22,100	10,700	2,300
85°	31,900	22,000	9,900	2,450
90°	30,800	21,600	9,200	2,600
95°	**29,700**	**21,100**	**8,600**	**2,700**
100°	28,500	20,700	7,800	2,900
105°	27,300	20,200	7,100	3,000
110°	26,200	20,000	6,200	3,200
115°	25,100	19,800	5,300	3,350
TVA Conditions @ 95° OD DB, 75° ID, 63° ID WB				
95°	**28,700**	**20,700**	**8,000**	**2,700**

GXV9SA3610A* / AHVE48DP1300A* Design Subcooling @ AHRI 95 °F Conditions, 8-10 °F - 100 % Demand				
Outdoor Temp. °F	**Total BTU/h**	**Sensible BTU/h**	**Latent BTU/h**	**Total Watts**
75°	41,000	30,300	10,700	2,530
80°	39,800	30,000	9,800	2,695
85°	38,500	29,600	8,900	2,860
90°	36,800	28,700	8,100	3,095
95°	**35,000**	**27,700**	**7,300**	**3,330**
100°	33,600	26,900	6,700	3,480
105°	32,100	26,000	6,100	3,630
110°	30,600	25,700	4,900	3,865
115°	29,100	25,300	3,800	4,100
TVA Conditions @ 95° OD DB, 75° ID, 63° ID WB				
95°	**34,100**	**27,300**	**6,800**	**3,230**

GXV9SA3610A* / AHVE48DP1300A* Design Subcooling @ AHRI 95 °F Conditions, 8-10 °F - Boost Mode				
Outdoor Temp. °F	**Total BTU/h**	**Sensible BTU/h**	**Latent BTU/h**	**Total Watts**
75°	59,100	38,400	20,700	3,600
80°	57,300	37,800	19,500	3,900
85°	55,500	37,200	18,300	4,150
90°	53,200	36,200	17,000	4,400
95°	**50,900**	**35,100**	**15,800**	**4,700**
100°	48,500	34,200	14,300	5,000
105°	46,100	33,200	12,900	5,350
110°	37,600	29,200	8,400	4,800
115°	29,000	25,200	3,800	4,200
TVA Conditions @ 95° OD DB, 75° ID, 63° ID WB				
95°	**49,100**	**34,400**	**14,700**	**4,700**

GXV9SA4810A* / AHVE60DP1300A*
Design Subcooling @ AHRI 95 °F Conditions, 8-10 °F - 100 % Demand

Outdoor Temp. °F	Total BTU/h	Sensible BTU/h	Latent BTU/h	Total Watts
75°	51,200	34,300	16,900	3,710
80°	50,200	34,400	15,800	3,945
85°	49,100	34,400	14,700	4,180
90°	47,800	34,000	13,800	4,415
95°	**46,500**	**33,500**	**13,000**	**4,650**
100°	44,700	32,600	12,100	4,945
105°	42,900	31,700	11,200	5,240
110°	39,000	29,900	9,100	5,120
115°	35,100	28,100	7,000	5,000
TVA Conditions @ 95° OD DB, 75° ID, 63° ID WB				
95°	**44,500**	**32,500**	**12,000**	**4,690**

GXV9SA4810A* / AHVE60DP1300A*
Design Subcooling @ AHRI 95 °F Conditions, 8-10 °F - Boost Mode

Outdoor Temp. °F	Total BTU/h	Sensible BTU/h	Latent BTU/h	Total Watts
75°	61,800	38,900	22,900	5,400
80°	61,200	38,900	22,300	5,850
85°	60,600	38,800	21,800	6,300
90°	58,800	38,300	20,500	6,800
95°	**55,900**	**37,500**	**18,400**	**6,850**
100°	50,100	35,800	14,300	6,250
105°	44,300	34,000	10,300	5,650
110°	39,700	31,000	8,700	5,300
115°	35,100	28,000	7,100	5,000
TVA Conditions @ 95° OD DB, 75° ID, 63° ID WB				
95°	**53,700**	**36,500**	**17,200**	**6,900**

GXV9SA6010A* / AHVE60DP1300A*
Design Subcooling @ AHRI 95 °F Conditions, 15-17 °F - 100 % Demand

Outdoor Temp. °F	Total BTU/h	Sensible BTU/h	Latent BTU/h	Total Watts
75°	59,700	40,000	19,700	4,570
80°	59,300	40,300	19,000	4,845
85°	58,900	40,600	18,300	5,120
90°	58,000	40,300	17,700	5,410
95°	**57,000**	**39,900**	**17,100**	**5,700**
100°	55,700	39,600	16,100	6,025
105°	54,400	39,200	15,200	6,350
110°	50,000	38,100	11,900	5,745
115°	45,500	36,900	8,600	5,140
TVA Conditions @ 95° OD DB, 75° ID, 63° ID WB				
95°	**54,900**	**39,000**	**15,900**	**5,710**

GXV9SA6010A* / AHVE60DP1300A*
Design Subcooling @ AHRI 95 °F Conditions, 15-17 °F - Boost Mode

Outdoor Temp. °F	Total BTU/h	Sensible BTU/h	Latent BTU/h	Total Watts
75°	62,900	42,600	20,300	4,600
80°	62,600	43,000	19,600	4,900
85°	62,000	43,200	18,800	5,100
90°	61,100	43,100	18,000	5,400
95°	**60,000**	**43,100**	**16,900**	**6,000**
100°	58,600	43,700	14,900	6,700
105°	57,200	41,700	15,500	6,400
110°	53,600	40,400	13,200	6,300
115°	45,500	36,800	8,700	5,200
TVA Conditions @ 95° OD DB, 75° ID, 63° ID WB				
95°	**57,800**	**41,700**	**16,100**	**5,700**

Tonnage	Total Unit Sound Rating (dBA)	Octave Band Spectrum Frequency (Hz) Analysis (dBs)						
		125	250	500	1000	2000	4000	8000
2-ton	67	57.9	58.4	62.9	61.1	55.1	48.3	41.2
3-ton	71	60.3	64.5	65.2	65.8	60.9	54.4	48.1
4-ton	73	62.9	66.4	67.0	67.4	63.0	58.9	50.6
5-ton	77	79.6	76.8	75.5	71.8	67.2	59.0	53.6

Note: Tested in accordance with AHRI Standard 270.

Quiet mode_Cooling

Tonnage	Sound suppression level	Sound Power Level (dBA)[1]	Sound Pressure Level (dBA)[2]	Capacity Decrease
2-ton	LV.1	65	51	~5%
	LV.2	62	48	~15%
	LV.3	59	45	~35%
3-ton	LV.1	67	55	~5%
	LV.2	62	50	~30%
	LV.3	57	45	~35%
4-ton	LV.1	68	55	~5%
	LV.2	63	50	~30%
	LV.3	58	45	~45%
5-ton	LV.1	72	56	~5%
	LV.2	69	53	~25%
	LV.3	66	45	~50%

[1] Quiet Mode Sound Power and Sound Pressure levels determined at a distance of 3 [ft].

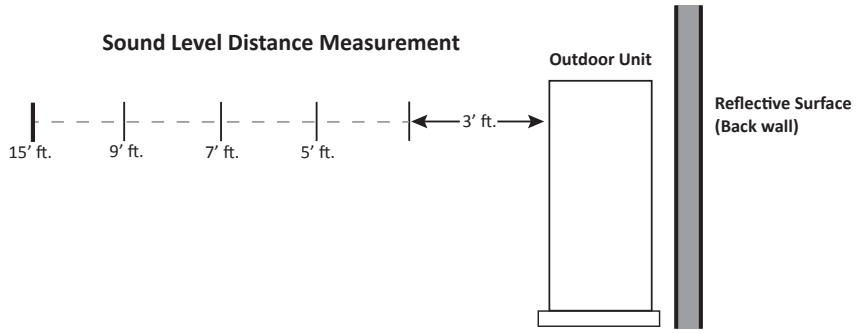

		Sound Pressure (dBA) Cooling Mode[1]				
		Distance From Property Line				
Tonnage	**Reflective Surface Qty.**	**3'**	**5'**	**7'**	**9'**	**15'**
2.0 Ton	0	60	55	52	50	46
	1	63	58	55	53	49
	2	66	61	58	56	52
3.0 Ton	0	64	59	56	54	50
	1	67	62	59	57	53
	2	70	65	62	60	56
4.0 Ton	0	66	61	58	56	52
	1	69	64	61	59	55
	2	72	67	64	62	58
5.0 Ton	0	70	65	62	60	56
	1	73	68	65	63	59
	2	76	71	68	66	62

[1] Compliant with AHRI 275 utilizing standard mode, total sound levels

All AHRI system ratings are accessible in the System Configurator tool via PartnerLink.

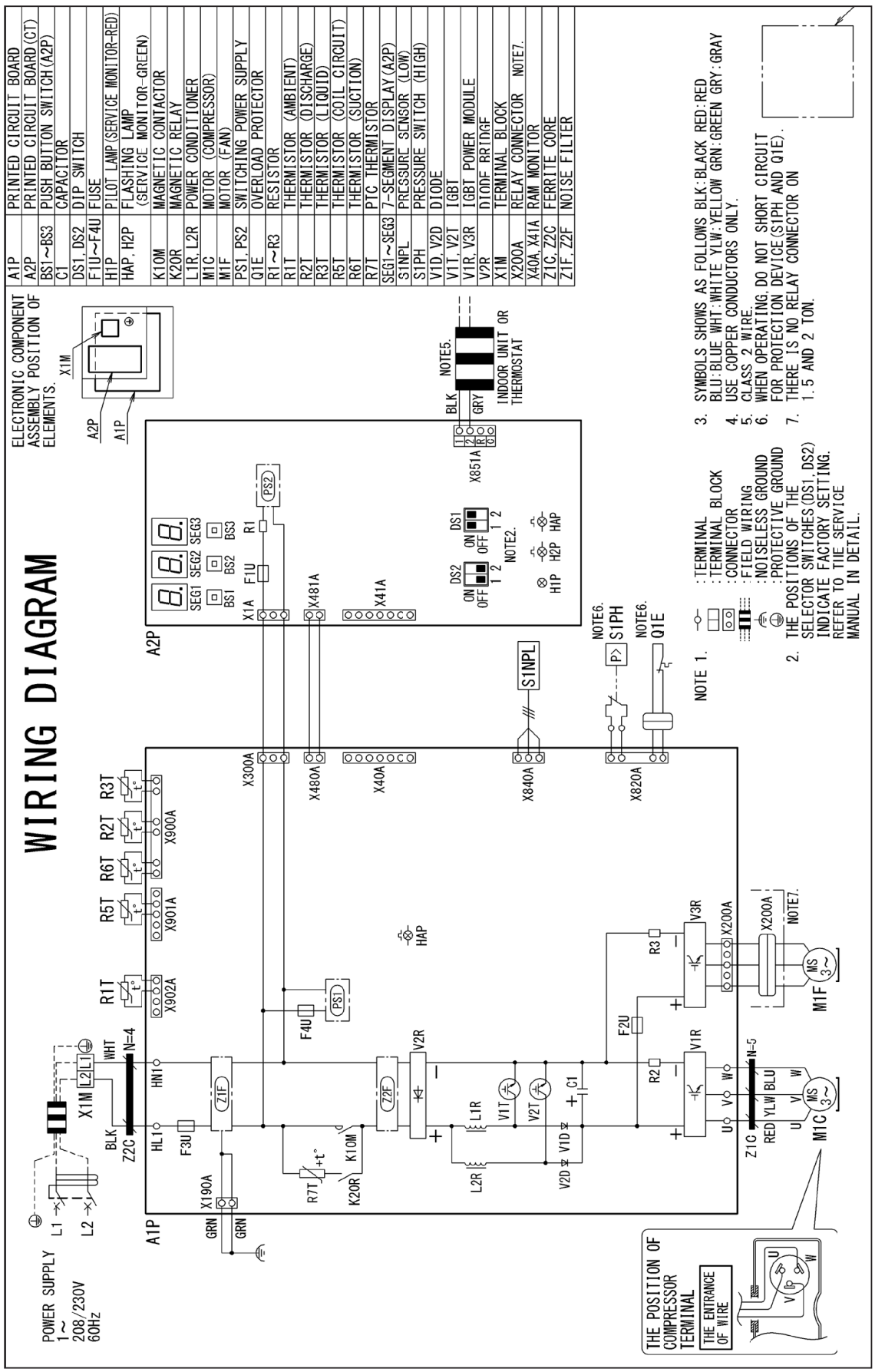

Wiring is subject to change. Always refer to the wiring diagram or the unit for the most up-to-date wiring.

WARNING

High Voltage: Disconnect all power before servicing or installing this unit. Multiple power sources may be present. Failure to do so may cause property damage, personal injury, or death.

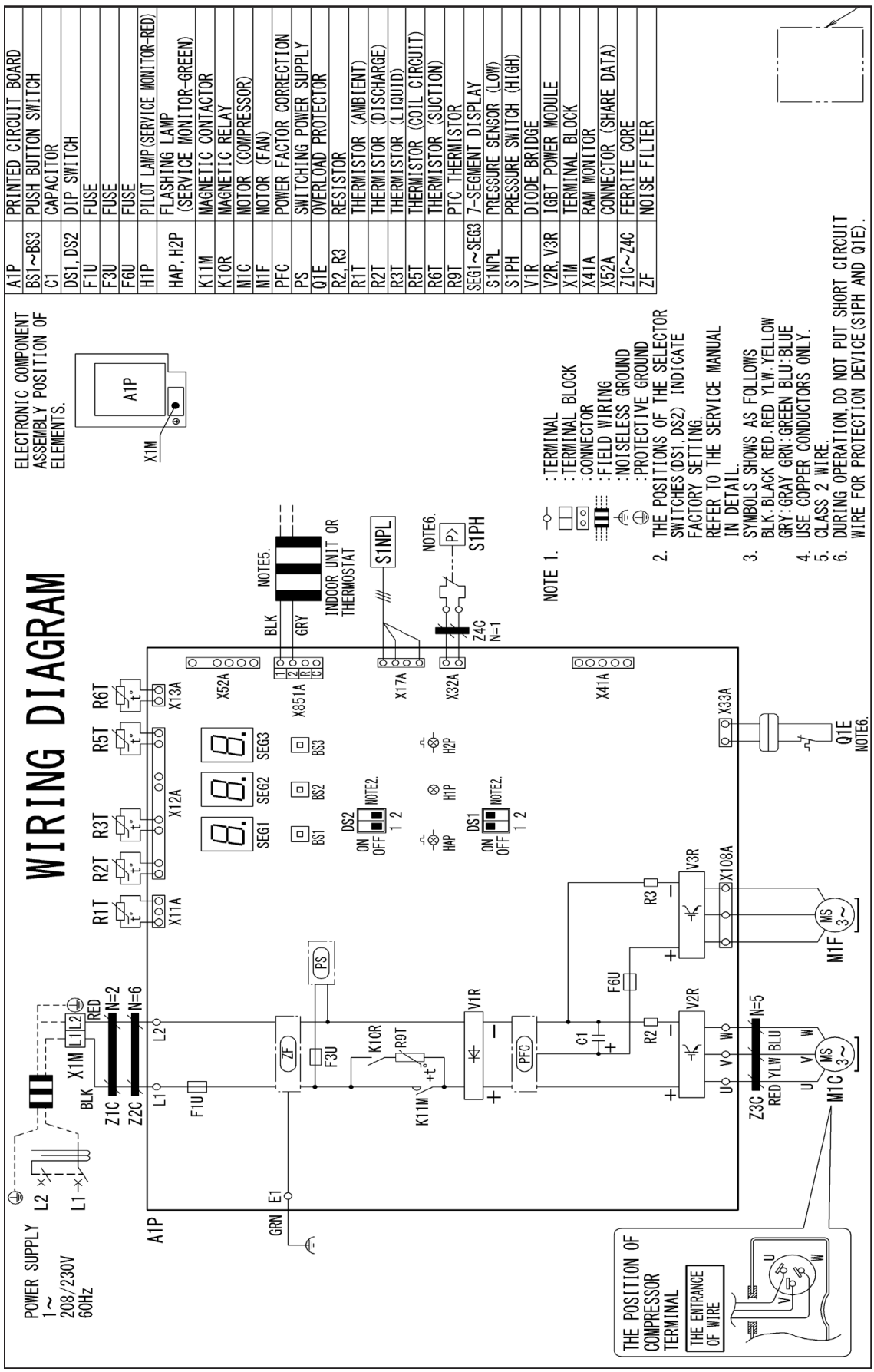

Wiring is subject to change. Always refer to the wiring diagram or the unit for the most up-to-date wiring.

WARNING

High Voltage: Disconnect all power before servicing or installing this unit. Multiple power sources may be present. Failure to do so may cause property damage, personal injury, or death.

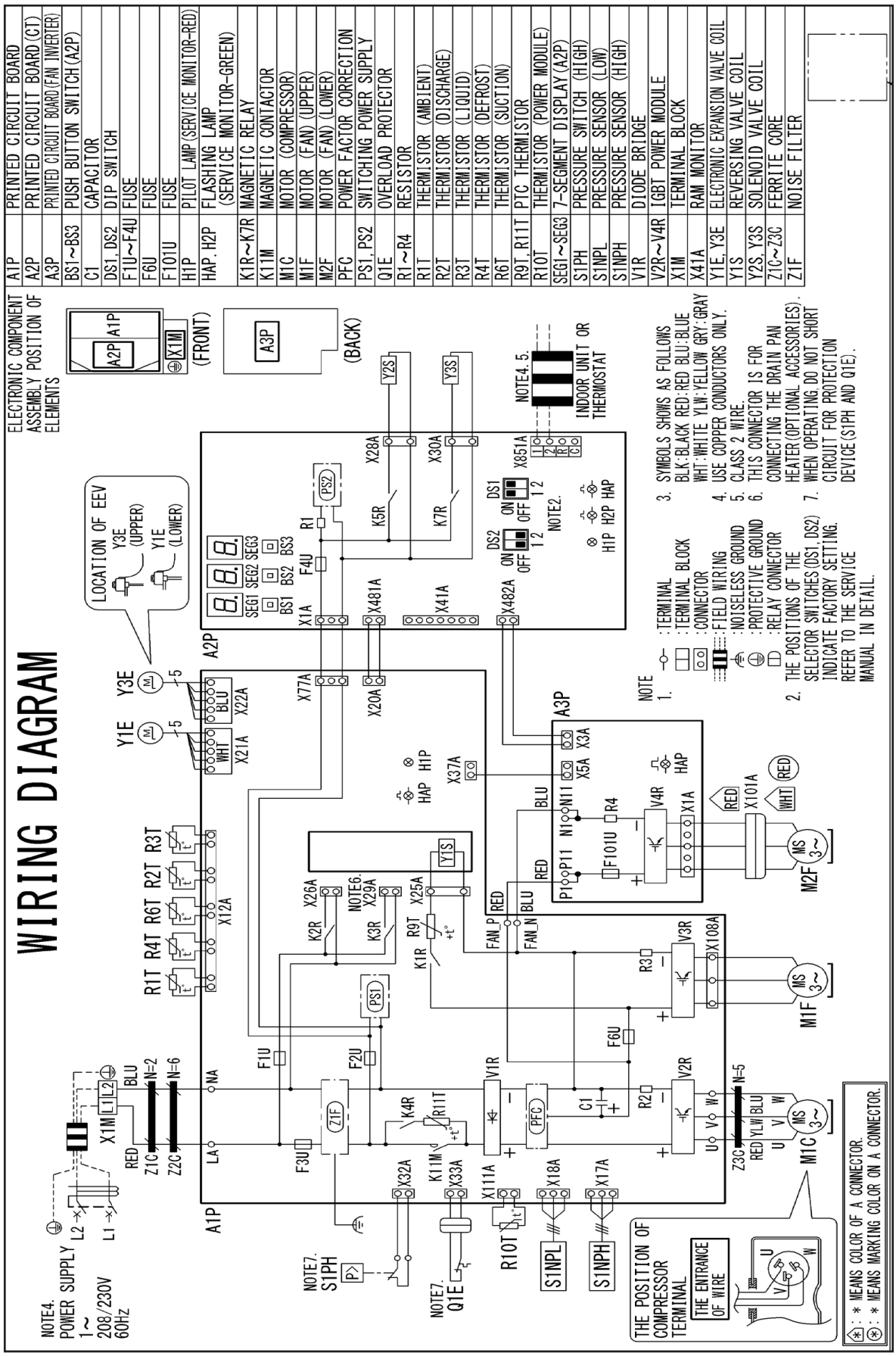

Wiring is subject to change. Always refer to the wiring diagram on the unit for the most up-to-date wiring.

WARNING — ***High Voltage:*** Disconnect all power before servicing or installing this unit. Multiple power sources may be present. Failure to do so may cause property damage, personal injury, or death.

MODEL	DIMENSIONS		
	W"	D"	H"
GXV9SA2410A*	36⅝	13¾	27⅞

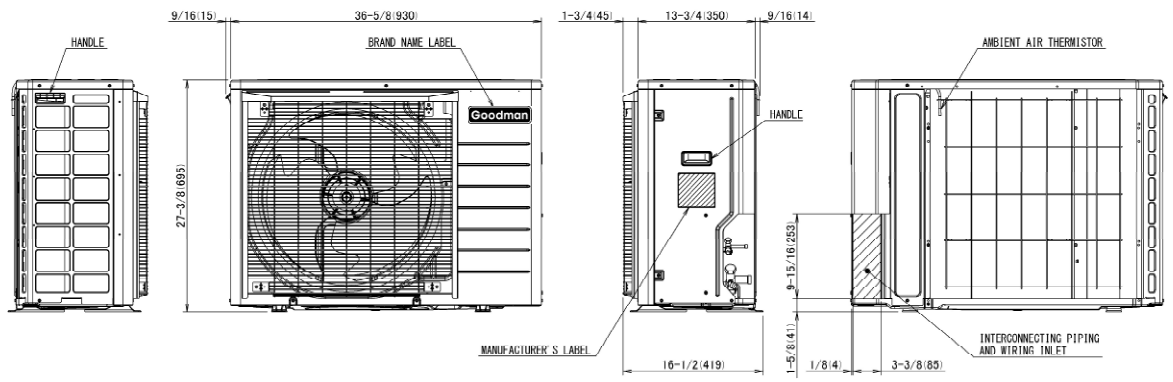

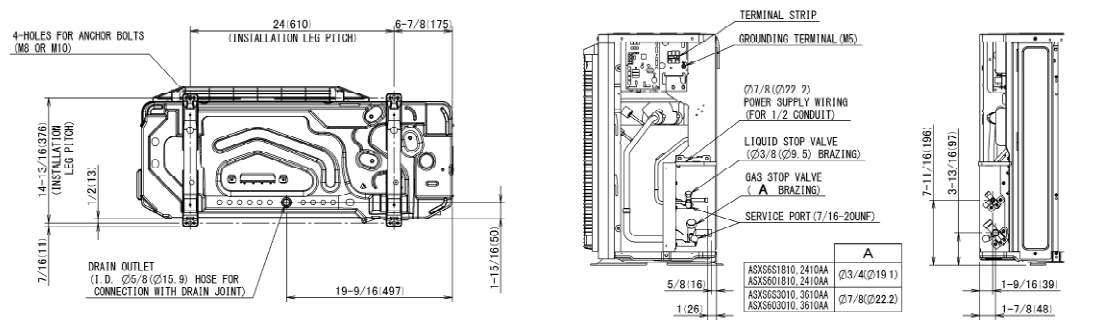

UNIT: inch(mm)

MODEL	DIMENSIONS		
	W"	D"	H"
GXV9SA3610A*	37	12⅝	39
GXV9SA4810A*	37	12⅝	39

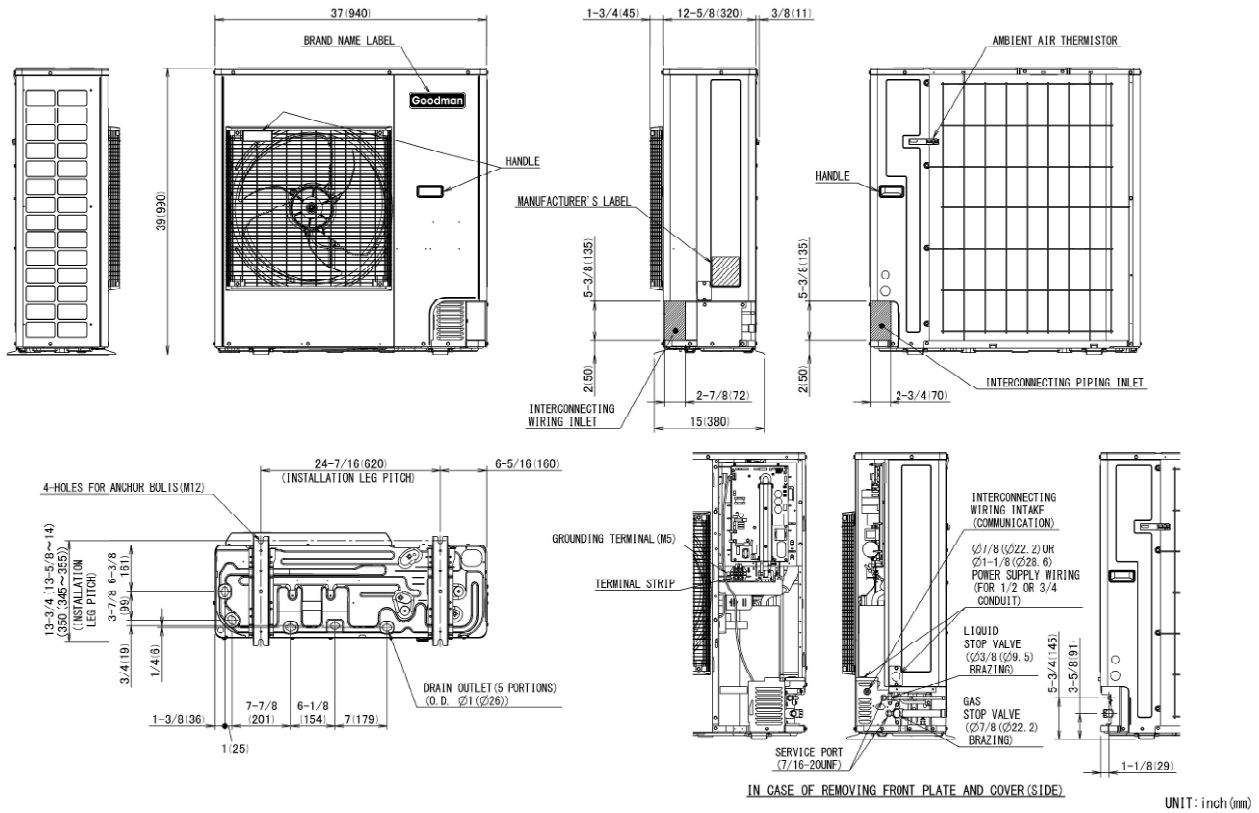

MODEL	DIMENSIONS		
	W"	D"	H"
GXV9SA6010A*	37	12⅞	56 5/16

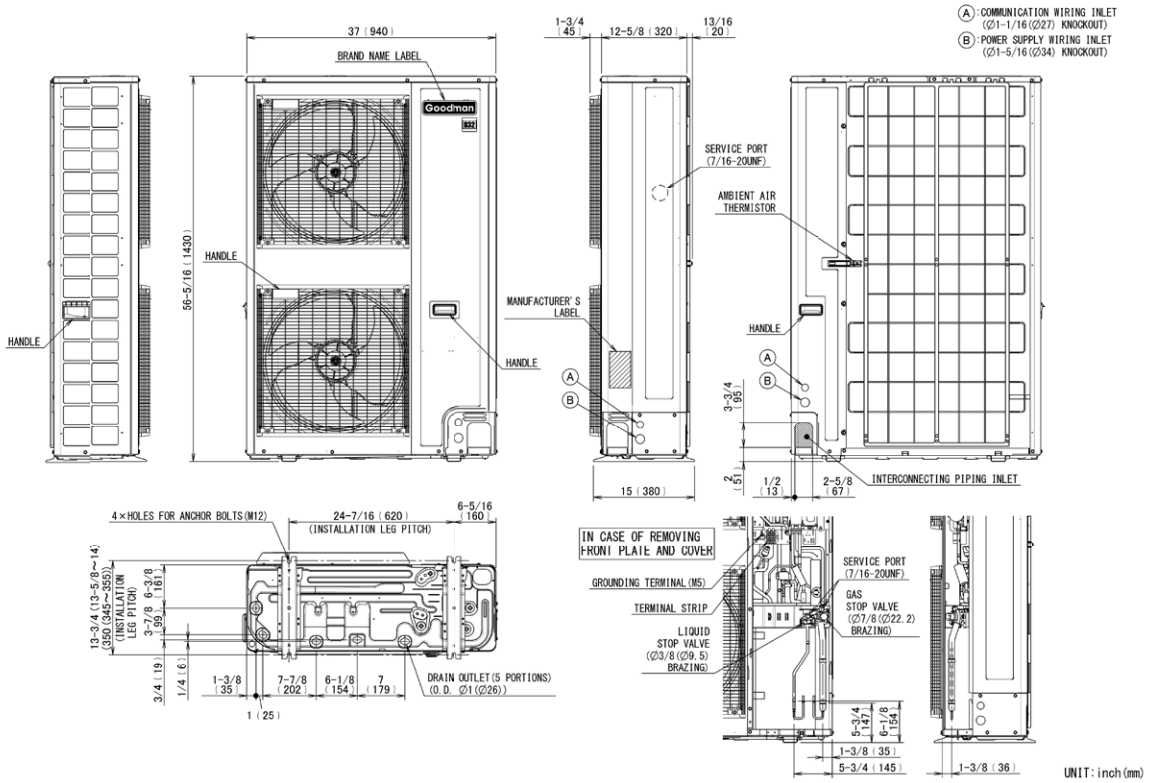

MODEL	DESCRIPTION	GXV9S A2410A*	GXV9S A3610A*	GXV9S A4810A*	GXV9S A6010A*
KPW5G112	Wind Baffle	X	X	X	X[1] (2)
130-DK-006	Hail Guard	X			
130-DK-008	Hail Guard		X	X	
DACA-WB-3	Powder Coated Wall-Mounted Bracket	X	X	X	
0270R02063 (130-DK-017)	Hail Guard				X
DSEN-HAQA	Daikin One Home Air Monitor				X

[1] Please ensure that 2 nos (KPW5G112) are ordered for each model when placing the order.

Our continuing commitment to quality products may mean a change in specifications without notice.
©2025 DAIKIN COMFORT TECHNOLOGIES MANUFACTURING, INC. • Houston, Texas • Printed in the USA.