PR-D12

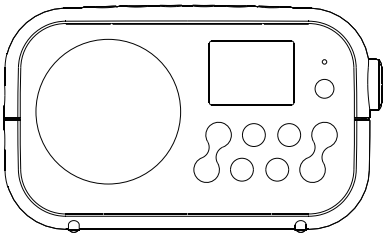

GB

Version 1

Important safety instructions

1. Please read all instructions carefully.
2. Please keep these instructions for future reference.
3. Heed all warnings.
4. Follow all instructions.
5. Do not use this apparatus near water.
6. Clean only with clean dry cloth.
7. Do not block any ventilation openings. Install in accordance with the manufacturers instructions.
8. Do not install near any heat sources such as radiators, heat registers, stoves, or other apparatus (including amplifiers) that produce heat.
9. Do not defeat the safety purpose of the polarized or grounding type plug. A polarized plug has two blades with one wider than the other. A grounding type plug has two blades and a third grounding prong. The wide blade or the third prong is provided for your safety. If the provided plug does not fit into your outlet. Consult an electrician for replacement of the obsolete outlet.
10. Protect the power cord from being walked on or pinched particularly at plugs, convenience receptacles, and the point where they exit from the apparatus.
11. Only use attachments/accessories specified by the manufacturer.
12. Use only with the cart, stand, tripod, bracket, or table specified by the manufacturer, or sold with the apparatus. When a cart is used, use caution when moving the cart / apparatus combination to avoid injury from tip-over.
13. Unplug this apparatus during lightning storms or when unused for long periods of time.
14. Refer all servicing to qualified service personnel. Servicing is required when the apparatus has been damaged in any way, such as power-supply cord or plug is damaged, liquid has been spilled or objects have fallen into the apparatus, the apparatus has been exposed to rain or moisture, does not operate normally or has been dropped.
15. To Reduce the Risk of Fire or Electric Shock, Do not Expose This Appliance To Rain or Moisture.
16. The Shock Hazard Marking and Associated Graphical Symbol is provided on the rear of unit.
17. Apparatus shall not be exposed to dripping or splashing and no objects filled with liquids, shall be placed on the apparatus.
18. Long term exposure to loud music may cause hearing damage or hearing loss. It is best to avoid long term extreme volume listening while using Earbuds or headphones with this device.
19. The power plug should be close to the radio, and easy to unplug in case of an emergency. To disconnect the power from the radio, just unplug the power plug from the AC power outlet.

For United States:

Cautions to the user

The changes or modifications not expressly approved by the party responsible for compliance could void the users authority to operate the equipment.

The equipment has been tested and found to comply with the limits for a Class B Digital Device, pursuant to part 15 of the FCC Rules. These limits are designed to provide reasonable protection against harmful interference in a residential installation. This equipment generates, uses and can radiate radio frequency energy and, if not installed and used in accordance with the instruction, may cause harmful interference to radio communication. However, there is no guaranty that interference will not occur in a particular installation. If this equipment does cause harmful interference to radio or television reception, which can be determined by turning the equipment off and on, the user is encouraged to try to correct the interference by one or more of the following measures:

- Reorient or relocate the receiving antenna.
- Increase the separation between the equipment and receiver.
- Connect the equipment into an outlet on a circuit different from that to which the receiver is connected.
- Consult the dealer or an experienced radio / TV technician for help.

⚠ CAUTION

These servicing instructions are for use by qualified service personnel only. To reduce the risk of the electric shock, do not perform any servicing other than that contained in the operating instructions unless you are qualified to so.

VERY IMPORTANT PLEASE READ

Sangean suggest that you keep your AC Adapter at least 12 inches away from the radio while listening to the AM Band.

Your Sangean Radio is powered by an AC adapter which is a “switching” or “switch-mode” type. The DOE (Department Of Energy) has a Federal mandate; requiring all manufactures to use this type of power supply.

This newer power saving technology has the unfortunate side effect of causing interference to the AM radio band.

Therefore, we recommend that customers keep at least a 1 foot distance between the AC adapter and the radio. This interference will not affect the FM Band. If you have any questions please contact customer service at (888)726-4326, (562)941-9900 or service@sangean.com

If an AC adapter isn’t included in this model and if you wish to purchase an AC Adapter separately, please refer to the specifications for the AC Adapter stated on the final page of the manual, or please contact Sangean for the correct AC Adapter and specifications.

To learn more about the DOE mandate please visit:

http://www1.eere.energy. gov/buildings/appliance_standards/product.aspx/productid/23

Please note not all AC adapters are alike.

The AC adapter that is included with this radio is designed to be used exclusively with this device. Do not use an AC adapter that differs from the specifications on the AC adapter that is included.

If an AC adapter is NOT included with your radio and in order not to damage the unit and void your warranty, specifications for the AC Adapter are stated on the final page of the manual, or please contact Sangean for the correct AC Adapter and specifications. For customers in the US and Canada, please call 562-941-9900 or 888-726-4326. For all other areas, please contact us via contact@sangean.com

Do not use an AC adapter that does not meet the correct specifications.

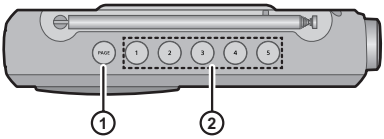
PAGE
1
2
3
4
5
1
2

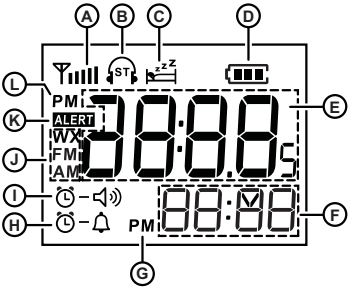
A
B
C
D
E
F
G
H
I
J
K
L
ST
PM
ALERT
WX
FM
AM
PM

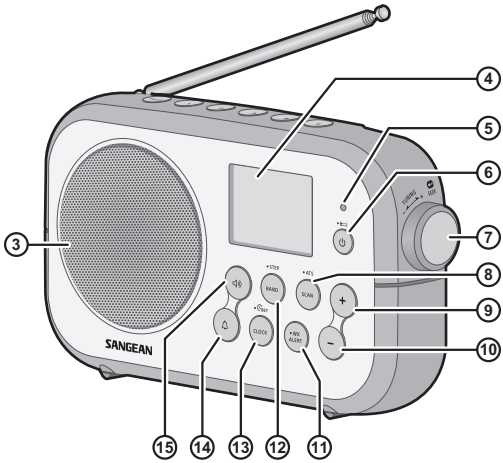
3
4
5
6
7
8
9
10
11
12
13
14
15
SANGEAN
BAND
SCAN
CLOCK
WX ALERT

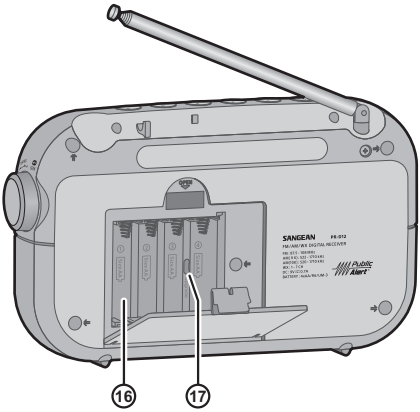
16
17
SANGEAN
PR-D12
Public Alert

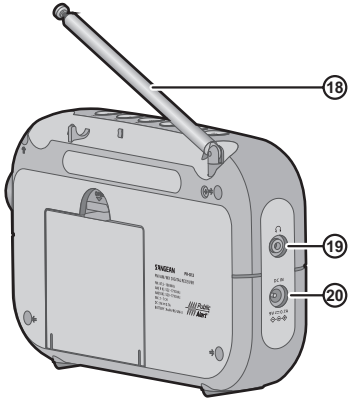
18
19
20
SANGEAN
Public Alert

GB

F

E

Controls

1	Page button
2	Preset buttons
3	Speaker
4	LCD display
5	Weather Alert LED indicator
6	Power / Standby / Sleep button
7	Tuning control knob / Select / Seek button
8	Scan / ATS button
9	Volume up button
10	Volume down button

11	WX Alert button (Weather Alert button)
12	Band / Tuning step button
13	Clock / Time setting button
14	Buzzer alarm button
15	Radio alarm button
16	Battery compartment
17	USB socket for software upgrade (for customer service only)
18	Telescopic antenna
19	Headphone socket
20	DC IN socket

Display icons

A	Signal strength meter
B	FM stereo indicator (for Headphone)
C	Sleep / Snooze indicator
D	Battery power indicator
E	Frequency / Clock / Volume level display
F	Clock display / Preset number display

G	PM indicator
H	Buzzer alarm indicator
I	Radio alarm indicator
J	Indicates Band in use
K	Weather alert indicator
L	PM indicator

Battery operation

1. Open the battery cover on the rear of the unit by lifting the latch.
2. Insert four UM-3 (AA size) batteries into the spaces in the compartment.
3. Make sure all batteries are inserted with correct polarity as shown in the battery compartment. Replace the battery cover.
4. Reduced power, distortion, “stuttering sound” and the symbol “E” flashing or empty battery icon flashing on the display are all signs that the batteries need replacing.
5. If the radio is not to be used for an extended period of time, it is recommended that the batteries are removed from the radio.

Using the AC power adaptor

The AC power adaptor included with this unit is 9 volts DC at 0.7A center pin positive.

Insert the adaptor plug into the DC socket on the left side of the radio. Plug the adaptor into a standard AC outlet.

Whenever the adaptor is used, the batteries are automatically disconnected. The AC adaptor should be disconnected from the main supply when not in use.

⚠ IMPORTANT

The AC adaptor is used as the means of connecting the radio to the power supply. The AC Adapter used for the radio must remain accessible during normal use in order to disconnect the radio from the power supply completely.

Setting clock time

Upon initial use of the radio after the batteries have been installed or the AC adaptor is plugged in, the display will flash 12:00. Rotate the Tuning control knob to set the required hours. Press the Select button. The minute digits will flash. Rotate the Tuning control knob to set required minute. Press the Select button to complete the time setting. The display will then show the current time.

If you want to adjust the time, the clock can be set when the radio is in power on or standby mode. Press and hold the Time setting button until it beeps, the hour digits will flash on the display. Follow the above instructions to set hour / minute.

Seek and Scan Tuning – FM / AM

GB

F

E

1. Press the Power button to turn on the radio.
2. Select the required frequency band by pressing the Band button. For the FM band fully extend and rotate telescopic antenna to get best reception. For the AM band, rotate the radio to get the best signal. (Please note this radio has a built-in AM antenna.)
3. To seek up in frequency, rotate the Tuning control knob in a clockwise direction, then press the Seek button. Your radio will seek in an upwards direction (low frequency to high frequency) and stop automatically when it finds a station of sufficient strength.

   To seek down in frequency, rotate the Tuning control knob in an anti-clockwise direction, then press the Seek button. Your radio will seek in a downwards direction and stop automatically when it finds a station of sufficient strength.

   Scan Tuning: press the Scan button, the radio will search and stop automatically about 6 seconds when it finds a radio station. Press the Scan button again within 6 seconds to listen to the found station. If you do not press the Scan button when it finds a radio station, after 6 seconds the radio will continue to search for the next available stations.
4. If you want to view the current time, simply press the Clock button.
5. Press the Volume up / down button to set your required sound level.
6. To turn off the radio, press the Power button. The display will show “OFF”.

ATS tuning (Auto Tuning System) – FM / AM

The radio features an Auto Tuning System (ATS) that will automatically store radio stations into the memory presets on the FM and AM band upon the signal strength of the incoming stations. ATS FM / ATS AM can be operated only when the radio is on.

1. Turn on the radio. Select either the FM or AM band by pressing the Band button.
2. Press and hold the ATS button. The radio will start the Auto Tuning System (ATS), and store the found stations based upon the signal strength into the memory presets. The radio allows a maximum of 20 presets in 4 memory pages both on the FM and AM bands. The Weather band does not feature Auto Tuning System.

   All previously stored preset stations will be erased when ATS operation commences and stations are found.

   The station stored on P1M1 will be recalled after the ATS operation is completed.

M

Manual tuning – FM / AM

1. With your radio switched on, press the Band button to select the required frequency band.
2. Rotate the Tuning control knob to tune to a station. The frequency will change in steps of 50kHz / 100kHz / 200kHz in FM or 9kHz / 10kHz in AM.
3. When the frequency band end is reached the radio will recommence tuning from the opposite frequency band end.
4. Press the Volume up / down button to set your required sound level.

Presetting stations – FM / AM / WX

The radio has 20 memory presets each for FM and AM bands, 5 memory presets in weather (WX) band.

1. With your radio switched on, press the Band button to select the FM, AM or weather band.
2. Tune to the required radio station as previously described.
3. To store the FM / AM station as a preset, press the Page button to select the required preset page 1 to 4 and then press and hold the required preset button (1-5) until you hear a beep and the display will show the page and the memory pre-set you selected. e.g. "P1M1".

   The Weather band has no memory page. To store the Weather station as a preset, Press and hold the required Preset button (1-5) until the radio beeps and the preset number (e.g. M2) will show on the display.

Recalling a preset station – FM / AM / WX

1. With your radio switched on, press the Band button to select the FM, AM or weather band.
2. To recall a preset station for FM / AM band, press the Page button to select the required preset page (1-4) and momentarily press the required Preset button (1-5), your radio will tune to the station stored in the selected preset memory.

   ⚠ NOTE

   The display will flash "---" if no station has been stored to that preset.

   To recall a preset station for weather (WX) band, momentarily press the required Preset button (1-5) to tune to the station stored in the selected preset memory.

Weather alert system

The weather alert function on the radio can alert you to special weather related emergencies. During an emergency or weather related hazard, NOAA issues an emergency tone that will set off an audible and / or visual alarm on the radio.

⚠ NOTE

Hazard warnings are not available in all areas. There are 7 standard NOAA weather channels used in the US and Canada. The radio receives broadcasts up to 40 miles from transmitting stations.

1. To listen to the standard NOAA weather channels, turn on the radio. Press the Band button to select the weather (WX) band.
2. Rotate the Tuning control knob to select the programmed channel. There should be one or more weather service stations broadcasting in your local area. If there is a severe weather or weather related emergency, NOAA will update weather broadcast more frequently. If there is a weather emergency, NOAA will issue an alert tone.

   1ch to 7ch frequencies are:

162.400	162.425	162.450	162.475	162.500	162.525	162.550

Setting the weather alert

1. Follow the steps above to tune to the required weather station.
2. Press and hold the WX Alert button until the ALERT symbol appears on the display to activate the weather alert function. Continuously press and hold the WX Alert button, this will cycle through the required ON-2H-4H-8H-16H of alert time. “ON” indicates that the weather alert function is always on. Release the WX Alert button when the required alert time is chosen. The Weather Alert LED indicator will light red with 5 second interval. Then the radio will be put into weather alert standby mode.

> ⚠ **NOTE**
> When the radio is set to the weather alert mode, all the buttons on the panel will be invalid.

3. If NOAA issues a weather related emergency, the radio will automatically alert you with a siren continuing for 1 minute and the ALERT symbol and the weather alert red LED will both blink if you do not press any button. After 1 minute of siren, your radio will play the selected weather channel broadcast automatically for 12 minutes. Then the radio will be put into weather alert standby mode.
4. When the siren is active, pressing any button on the radio instantly turns the radio to the selected weather broadcasting and cancels the siren. The ALERT symbol and the weather alert red LED will stop flashing. To stop playing the selected weather broadcasting, press the Power button. Then the radio will be put into weather alert standby mode.

Turning off the weather alert function

Press and hold the WX Alert button until “OFF” is shown on the display to turn off the weather alert function. The ALERT symbol will disappear on the display.

GB

F

E

Setting the alarm

Your radio has two types of alarms which can be set to wake you with AM / FM radio or buzzer alarm. Ensure that the time setting is complete before setting the alarm time. The alarms can be set while the unit is off or while playing. Alarms will be retained in the event of a power failure.

Setting the radio alarm

1. Press and hold the radio alarm button until the radio alarm symbol flashes on the display followed by two beeps.
2. Rotate the Tuning control knob to select the desired hour and press the Select button to confirm the hour setting.
3. Rotate the Tuning control knob to select the desired minute and press the Select button to confirm the minute setting. The radio alarm setting is now completed. The active radio alarm symbol is shown on the display. The radio alarm is set to the station last listened to.

> ⚠ **NOTE**
> The radio alarm will automatically switch to buzzer alarm when the selected radio alarm station signal is too weak.

4. To quick change the On / Off status of the radio alarm, press and release the radio alarm button.

Setting the buzzer alarm

1. Press and hold the buzzer alarm button until the buzzer alarm symbol flashes on the display followed by two beeps.
2. Rotate the Tuning control knob to select the desired hour and press the Select button to confirm the hour setting.
3. Rotate the Tuning control knob to select the desired minute and press the Select button to confirm the minute setting. The buzzer alarm setting is now completed. The active buzzer alarm symbol is shown on the display.
4. To quick change the On / Off status of the buzzer alarm, press and release the buzzer alarm button.

M

When the alarm sounds

To cancel a sounding alarm, press the Power button.

When the buzzer alarm activates, the buzzer alarm symbol will flash on the display. The alarm will start softly and gradually increase in level (Humane Wake System). It will sound for 1 minute and silence for 1 minute in repetition for 60 minutes unless cancelled.

When the radio alarm is activated, the alarm will go off in Humane Waking System and the radio alarm symbol will flash on the display for 60 minutes.

Disabling / cancelling alarm setting

To cancel the radio / buzzer alarm setting before the alarm sounds, press the radio / buzzer alarm button. The display will show “OFF”. The radio / buzzer alarm symbol will disappear from the display.

Snooze function

When the radio alarm sounds, pressing any button other than the Volume buttons and Power button will silence the alarm for 5 minutes. When the buzzer alarm sounds, the buzzer alarm can be silenced for 5 minutes by pressing any button other than the Power button. The display will show the snooze symbol and “Z” will flash on the display. To cancel the Snooze timer while the alarm is suspended, press the Power button to cancel the alarm.

Sleep function

The sleep timer will automatically switch off the radio after a preset time has elapsed.

1. Press and hold the Power button until the radio beeps. Keep long pressing the Power button and the display will cycle through the available options of 60-45-30-15-120-90-60 minutes.
2. Release the Power button when the required sleep time appears on the display. The Sleep symbol will show on the display.
3. To cancel the sleep function, press the Power button. The Sleep symbol will disappear and the radio is switched off.

Software version / Setting the time format / tuning step

Software version

The software display cannot be altered and is just for your reference.

1. Press the Power button to turn off the radio.
2. Press and hold the Band button until the radio beeps. Software version number (e.g. Pxx) is shown on the display.

Setting the time format / tuning step

1. After the software version is shown on the display, keep long pressing the Band button until the time format (e.g. 12H) is shown the display. Rotate the Tuning control knob to select “12H” or “24H”.
2. Press the select button to confirm the time format setting and enter the AM tuning step setting.
3. Rotate the Tuning control knob to select “10” or “9” kHz. Press the select button to confirm the AM tuning step setting and enter the FM tuning step setting.
4. Rotate the Tuning control knob to select “100”, “200” or “50” kHz. Press the select button to confirm the FM tuning step setting.

⚠ NOTE

In Europe and other parts of the world the AM tuning step is 9kHz, in North America the AM tuning step is 10kHz. FM tuning steps also vary from country to country.

Change in the AM tuning step setting will result in the removal of the radio alarm settings and AM presets stored in the radio.

Factory reset

If you wish to completely reset your radio to its initial state this may be performed by the following procedure. By performing a factory reset, all user entered settings will be erased.

1. Turn off the radio.
2. Press and hold Preset 3 button and the Band button at the same time, the “dEF” will appear and flash on the display. Continue holding down these two buttons until all the icons appear on the screen. Now the factory reset is completed.

Headphone socket

A standard 3.5mm headphone socket located on the left side of your radio is provided for use with headphones. Inserting earbuds or headphones will automatically mute the internal speaker.

Please be aware that the sensitivity of headphones can vary widely. We therefore recommend setting the volume to a low level before connecting headphones to the radio.

IMPORTANT

1. Excessive sound pressure from Earbuds or Headphones can cause hearing loss.
2. To prevent possible hearing damage, do not listen at high volume levels for long periods of time.

Specifications

AC Power adaptor	DC 9V 0.7A center pin positive
Batteries	4 X UM-3 (AA size)
Battery Life	Approx. 35hours of listening with the speaker at normal volume level.
	Approx. 80hours of listening with headphones at normal volume level.
	Battery life depends on selected battery capacity.
Frequency Coverage	FM 87.50 – 108 MHz
	AM 522 – 1710 kHz (9kHz / step)
	AM 520 – 1710 kHz (10kHz / step)
	WX 162.4 – 162.55 MHz
Loudspeaker	3inches, 8Ω / 3W
Output Power	
Speaker	1W
Headphones	1mW + 1mW
Headphone socket	3.5mm diameter
Antenna System	FM / WX telescopic antenna
	AM built-in ferrite antenna
Operating temperature range	0°C to +35°C

※ The barcode label on the product is defined as below:

aH181200001

aH 18 12 00001

- Serial number
- Production month
- Production year
- Product code

Sangean reserves the right to amend the specifications without notice.

If at any time in the future you should need to dispose of this product please note that: Waste electrical products should not be disposed of with household waste. Please recycle where facilities exist. Check with your Local Authority or retailer for recycling advice. (Waste Electrical and Electronic Equipment Directive)

GB
F
E