YPOO

MOTORIZED TREADMILL USER MANUAL

(A) Product Model: T5



(A)

PLEASE READ ALL INSTRUCTION IN THE OWNER'S MANUALCAREFULLY
BEFORE ASSEMBLY AND USE THE TREADMILL.
AND KEEP IT FOR FUTURE REFERENCE.

Contents

01 Important Safety Instructions 04

02 Safety Notice 07

03 Product Introduction 09

04 Installation Steps 10

05 Function Menu 13

06 Remote Control Operation 14

07 Error Codes & Troubleshooting 15

08 APP User Manual 17

09 Care and Maintenance 19

10 Warranty 22

11 Workout Guide 24

Customer Service

Thank You for Your Purchase!

For any issues such as damaged or defective products, questions about replacement parts or any other service support, please contact our customer service department using the following methods:

support@ypoofitness.com

12-24 Hours

1-844-977-0007

To receive the quickest response, especially during peak business hours, emailing us with your Order ID and Description of Parts (Adding photos or videos would be helpful) is the best method.

Important:

Please do not return this product or submit a parts description without first contacting customer service.

Download and use of YPOOFIT

1. To download the YPOOFIT app, scan the QR code or search "YPOOFIT" in the Apple App Store or Google Play Store.

YPOOFIT APP Download

APP Connection Guide

2. Open the YPOOFIT app. Log In or Sign Up.
3. Please note: If your phone is Apple - iPhone, please refer to the path: Profile > Settings>Language after login to switch the desired language.
4. Follow the in-app instructions to set up your device.

01. Important Safety Instructions

DANGER -To reduce the risk of electric shock

Always unplug this appliance from the electrical outlet immediately after using and before cleaning.

WARNING -To reduce the risk of burns, fire, electric shock, or injury to persons

- Never leave electrical appliances unattended after plugging them into an outlet. Unplug the appliance when not in use, and before installing or removing any parts.
- Do not use this device under blankets or pillows. Overheating may cause fire, electric shock, or personal injury.
- Children, patients, or persons with disabilities must be supervised by an adult at all times when using this device.
- Use the device strictly according to the instructions in this manual.
  Do not use accessories not recommended by the manufacturer.
- Do not use the device if the power cord or plug is damaged, if the device malfunctions, or if it has been dropped, damaged, or submerged in water. Contact the after-sales service department for assistance.
- Do not carry the device by the power cord, nor use the power cord as a handle.
- Keep the cord away from heated surfaces.

- Never use this device with the ventilation openings blocked. Keep the ventilation openings clear and free of lint, hair, and other debris.
- Do not drop or insert any objects into any openings.
- Do not use outdoors.
- Do not operate in areas where aerosol (spray) products are being used or where oxygen is being administered.
- CAUTION: To reduce the risk of injury from moving parts, unplug before servicing.
- WARNING: To reduce the risk of electric shock, unplug before cleaning or servicing.
- WARNING: Risk of personal injury. Keep children under the age of 13 away from this walking treadmill.
- To disconnect, turn all controls to the OFF position, then remove the plug from the outlet.
- This appliance is not intended for use by persons with reduced physical, sensory or mental capabilities or lack of experience and knowledge, unless they have been given supervision or instruction concerning use of the appliance by a person responsible for their safety.

WARNING:

Keep young children away from thismachine at all times.
Contact with the moving surface may result in severe friction burns.

SAVE THESE INSTRUCTIONS

GROUNDING INSTRUCTIONS:

- **This product must be grounded.** If it malfunctions or breaks down, grounding provides a path of least resistance for electric current, which reduces the risk of electric shock.

- The plug must be connected to a properly installed and grounded outlet that complies with all local electrical codes and ordinances.

⚠ DANGER

- Risk of Electric Shock: Improper connection of the equipment grounding conductor can result in a risk of electric shock. If you are unsure whether this product is properly grounded, consult a qualified electrician or service technician.

- Do not modify the plug provided with this product. If the plug does not fit your outlet, have a qualified electrician install a proper outlet.

02. Safety Notice



DO NOT
use during the 5-second auto-calibration cycle (after power-on).



DO NOT
store upright.

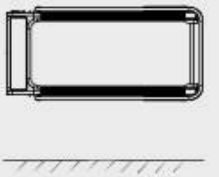

DO NOT
store sideways.



DO NOT
step on or off the walking treadmill while it is in operation.



DO NOT
use on uneven ground.



Please keep your gaze level to avoid dizziness.



Caution:
Extra care is required for elderly and pregnant users.



Please keep a rear clearance of at least 39 inches.



Children must be supervised at all times.

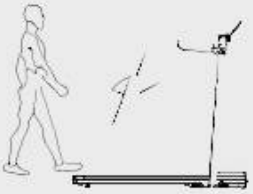

Please wear proper athletic footwear.

03. Product Introduction

Please inspect package contents on arrival.

If items are missing or damaged, please contact support@ypoofitness.com

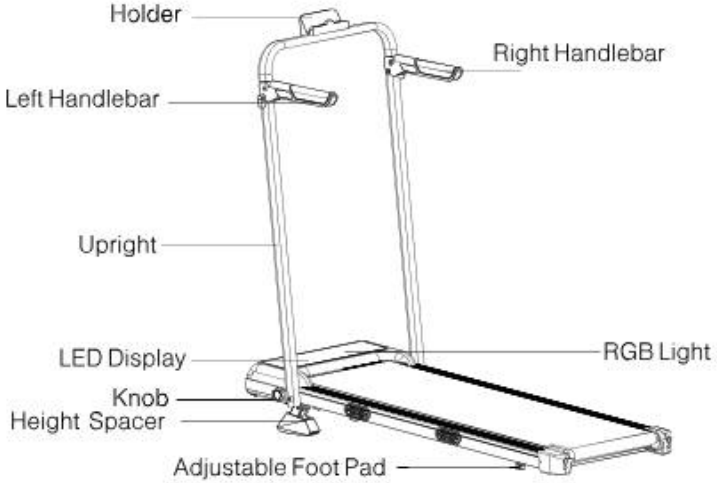

3.1 Accessories


Holder*1


pre-installed screw*2


Wrench*1


Power Cord*1


Pull-ring Pin*2


Height Spacer*2


Knob*2


User Manual*1


Remote Control*1


Lubricating Oil*1

3.2 Specification

Color:	Black
Speed:	0.6-6.2 MPH
Shock Absorption:	Air

04. Installation Steps

The main frame of the treadmill is pre-assembled at the factory. Please follow these instructions to complete the final assembly and secure all components.



01

Step 1: Unboxing and Placement

1. Two people are required to carefully remove the treadmill from its packaging and place it on a flat, stable surface.

2. Maintain a minimum clearance of 39 inches (100 cm) at the front and rear of the treadmill at all times, including before/ after folding, during upright installation, and when handling the power cord.

02

Step 2: Upright Installation

Lift the uprights upward in the direction indicated by the arrows.

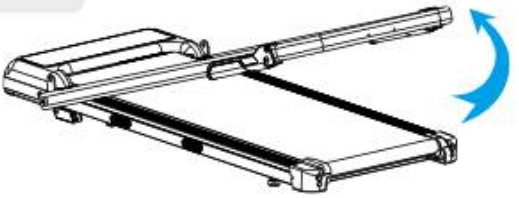

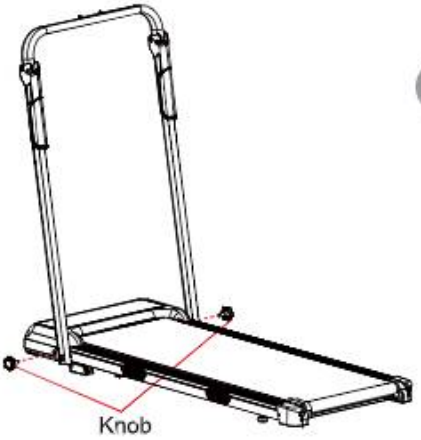

03

Step 3: Install the Locking Knobs

1. Locate the threaded holes on both the left and right uprights.
2. Insert the locking knobs and rotate clockwise until securely tightened.
3. Ensure both knobs are firmly secured before proceeding to the next step.

04

Step 4: Secure the Side Handlebars

Raise the side handlebars into the upright position.Lock them into place using the pull-ring pins.

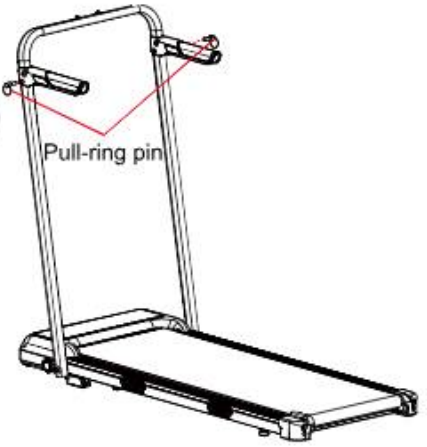

05

Step 5:Attach the Holder

1. Use the wrench to remove the 2 x pre-installed screws (4*15mm) from the upright.
2. Position the holder at the top of the upright. Secure it using the pre-installed screws.Tighten the screws firmly with the wrench.





06

Step 6: Incline Adjustment

1. Lift one side of the machine to access the bottom of the frame.
2. Then install the adjustment feet into the folding foot pads on both sides of the frame.
3. Ensure they are properly aligned and fully inserted.

Incline level sillustration
Figure A= Level1 (Lowest)
Figure B = Level 2(Medium)
Figure C = Level 3 (Highest)



Figure A Figure B Figure C

Manual Mode Operating Instructions

IMPORTANT SAFETY NOTE

For your safety, the treadmill must be connected to a properly grounded power outlet. Use a dedicated circuit do NOT share the outlet with other electrical appliances.
While this product is designed and manufactured with safety in mind, please follow all instructions carefully to ensure safe operation.

1.Place the treadmill on a level, open area.

2.Connect the power cord and turn on the power switch. The power indicator will illuminate, and the buzzer will beep once.

3.Check the display to ensure all data appears normal. Before pressing the Start button, make sure the support post knobs are securely tightened.

4.Press the Start button. The display will show "3-2-1," with the buzzer sounding once for each countdown. The motor will start automatically once the countdown completes.

05. Function Menu



12:38 / 2.2 / 16.3 / 226

TIME	SPEED	DIST	KCAL
Display Time 0-99.59	Display Speed 0.6-6.2 MPH	Display Distance 0-99.9 Mile	Display Calories 0-999

Setting Parameter	Initial Value	Display range
Time(Minutes: Seconds)	0:00	0-99:59
Speed (MPH)	0.6	0.6-6.2
Calories (Kcal)	0.00	0-999
Distance (Mile)	0.00	0.00-99.9

Tips: The workout datas (Speed, Time, Distance, Calorie) will be alternated display per 5 seconds.

06. Remote Control Operation

6.1 Remote Control Instructions

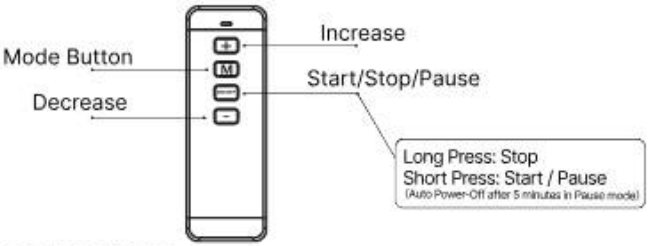

A.Manual Mode Function

In manual mode, press the " START " button to begin. The treadmill will start at 0.6MPH, and the time, distance, and calorie counters will start from 0. Press the "+"or "- " buttons to adjust the speed.

The display cycles through speed, calories, time, and distance every 5 seconds.

B.Countdown Mode Function

Press"M" and you can use the speed "+"or "-"to set the parameter value.

After setting, press the " START " button to run which will automatically stop when it reaches the set value.

- Time Countdown Mode: The window shows 30:00 minutes, set the time (5:00 to 99:59 minutes)with the speed keys.
- Distance Countdown Mode:The window shows 1 mile, set the distance (0.5 to 99.99 miles) with the speed keys.
- Calorie Countdown Mode: The window shows 50 kcal, set the target (10 to 999.9 kcal) with the speed keys.

6.2 Battery

2pcs AAA battery - 1.5V

07. Error Codes& Troubleshooting

Communication Error	Problem Description	Initial Actions & Support	
E01	Display panel not receiving real-time communication data	1. Check if the upper and lower control connection wires are properly plugged in. 2. Replace the connection wire.	If wires are damaged or the issue persists, please contact us.
E02	Motor phase loss or short circuit	Replace the motor	Please contact our customer support directly for further assistance.
E03	Hall sensor fault	Check if the Hall sensor wire is properly plugged in. If plugged in, power off and then power on again.	Issue unresolved? Please contact us.
E04	Controller has not received real-time communication data	1. Verify the upper/lower control connection wires are securely plugged in. 2. Replace the connection wires.	If wires are damaged or the issue persists, please contact us.
E05	Overcurrent protection	Power off and then power on again.	Issue unresolved? Please contact us.
E06	Stall protection	Check if any foreign objects are obstructing the motor, preventing rotation.	Issue unresolved? Please contact us.
E07	Safety Key	Verify the safety key is correctly positioned over the safety lock magnet.	/

E08	Display panel and keypad communication failure	1. Check if the display panel and keypad connection wire is properly plugged in. 2. Replace the connection wire.	If wires are damaged or the issue persists, please contact us.
E09	Undervoltage protection	Check if the input voltage matches the controller's rated voltage.	/
E0A	Overvoltage protection	1. User's grid voltage is unstable. 2. Replace the controller.	Issue unresolved? Please contact us.

Important Safety Notice:

Power off and unplug the device before performing any checks.
Do not disassemble core components or perform risky operations.
Our support team will provide you with professional solutions.

08. APP User Manual

Scan The QR Code
Download YPOO FIT APP

Connect the Device

Ensure Bluetooth is enabled on your mobile phone or tablet.

- 1. Download and install the YPOOFIT app on your device. You can search for "YPOOFIT" in the App Store/Google Play, or scan the QR code to download and install it.
- 2. Open the YPOOFIT app and follow the on-screen prompts to log in or create an account.
- 3.Open the app and tap the Bluetooth icon on the homepage. The app will automatically search for your treadmill.
- 4. Important: Please allow the app to handle the connection. Do not connect manually to any treadmill-related device via your phone's system settings.

  If the app cannot find your treadmill: Please try resetting the treadmill by turning it off and on again, then repeat the steps above.

  If you continue to experience issues, please contact us for further assistance.

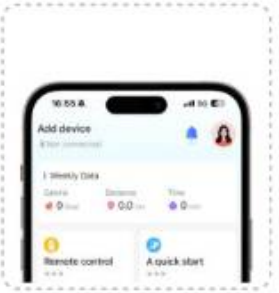



Multi-Course Library

Access a wide variety of workout courses in the app, so you can choose the programs that best align with your fitness goals.



Personalized Training Plans

Set workout plans in the app, and the treadmill automatically adjust speed and time for a smooth, rhythmic workout.



Simulated Outdoor Workouts

Experience immersive, real-world walking scenarios with vivid outdoor scenery, bringing the feeling of outdoor exercise into your home.



09. Care And Maintenance

Treadmill:Appropriate maintenance is the only way to keep your treadmill in optimum state
Wrong maintenance will damage or shorten the service life of treadmill.

Lubricating Oil (Manual Application)

- The treadmill is pre-lubricated at the factory, but regular inspection of the running belt lubrication is recommended to maintain optimal performance.
- Lubrication is required after 1 year of use or 100 hours of cumulative running.

Check Lubrication

1. After 30 hours of use or 30 days, lift one side of the running belt and touch the running platform surface.
2. If silicone oil is present, no lubrication is needed. If the surface is dry, proceed to lubricate as described below.



Lubrication Instructions

1. Gently lift one side of the running belt.
2. Squeeze a thin, continuous line of silicone oil onto the running deck.
3. After applying the oil, turn on the treadmill and run it at low speed for a few minutes to distribute the silicone oil evenly.

Important Notes

- Ensure the treadmill is stopped and the running belt is stationary during oiling.
- Use non-petroleum-based silicone oil only to avoid damage to the running platform and belt.
- Touch the deck surface: a slightly damp, non-sticky surface means the oil volume is appropriate; a greasy, slippery surface indicates excess oil.

Appliance cleaning.

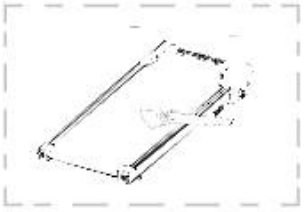

- Power Off & Unplug: Turn off the treadmill and unplug the power cord before cleaning.
- Wipe Down: Use a soft, damp cloth to wipe the treadmill frame and console. Do not use acidic or caustic detergents, as they can damage the surface.
- Cleaning Note: Do not clean the underside of the walking belt.
- The controller of treadmill shall not be directly exposed to sunlight or damp to prevent damage.Frequently inspect and lock all parts of treadmill and immediately replace the damaged parts.

09. Care And Maintenance

Running Belt Adjustment

The running belt can be adjusted for two purposes:

- **Adjust running belt**
- **Adjusting the belt alignment**

The running belt is factory-adjusted before shipment. After a period of use, the belt may stretch slightly and move away from the center.

Note:

This is normal during operation. If necessary, adjust the belt to restore the correct alignment.

A. Symptom Belt Tension Adjustment

If the running belt is slip or not smooth when you use the treadmill, you can improve it by adjusting degree of tightness of running belt

Tools Required: 5 mm Hex Wrench Adjustment Steps

1. Insert the hex wrench into the left adjustment screw. Turn clockwise 1/4 turn.
2. Repeat the same adjustment on the right side.
3. Ensure both sides are adjusted equally to keep the rear roller aligned.
4. Continue adjusting until the belt stops slipping during use.

Important：

· Do not overtighten the belt.

· Excessive tension may cause damage or abnormal noise.

B. Symptom : Walking Belt is Off-Center or Slipping

When using the treadmill, uneven foot pressure may cause the running belt to shift off-center. This is normal, and the belt will return to the center when the treadmill is not in use. Adjust the belt to the center only if it fails to realign automatically.

09. Care And Maintenance

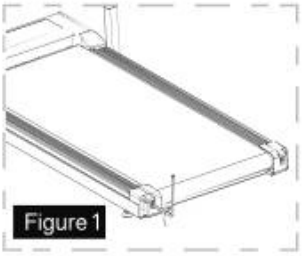
Figure 1

Walking Belt is Off-Center or Slipping:

1. Check Direction: Run the treadmill empty at low speed (2MPH). Observe which direction the belt drifts (left or right).
2. Power off appliance and unplug the power cord
3. Manual Centering:
   - If the belt drifts left, use the provided L-Wrench to turn the left idler roller screw clockwise ¼ of a turn (refer to Figure 1).
   - If the belt drifts right, use the provided L-Wrench to turn the right idler roller screw clockwise ¼ of a turn (refer to Figure 2).
4. Appliance MUST work 1-2mintutes. Repeat manual centering process untill the walk belt is centered.


Figure 2

Walking Belt Slipping Correction:

1. Power off appliance before operation.
2. Using the L-Wrench, turn both idler roller screws clockwise 1/2 of turn(refer to figure 3)
3. After corrected, please plug in the treadmill and walk on it at under 1 MPH for 1–2 minutes to check for slipping. Repeat the tightening process until the belt stays securely in place.

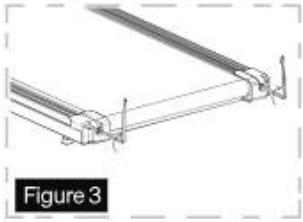
Figure 3

Attentions

1. Remove any debris around the treadmill before maintenance to prevent injury.
2. Always use the hex wrench provided with the treadmill.
3. Be careful during maintenance and avoid pinching your fingers.

10. Warranty

MANUFACTURER'S LIMITED WARRANTY

We warrant to the original purchaser that this product is free from defects in material and workmanship when used for its intended purpose, under the conditions that it has been installed and operated in accordance with the owner's manual.

LENGTH OF WARRANTY

1. Warranty Coverage
We offer a comprehensive **One-Year Limited Warranty** from the date of purchase.

2. Customer Support
Access **24/7 Online Customer Service** for immediate assistance.

Service Details During Warranty Period:

- We provide detailed troubleshooting and technical support or other remedies that do not require you to return the product.
- Should a defect arise from materials or workmanship, we will supply replacement parts free of charge.

EXCLUSIONS FROM WARRANTY COVERAGE

We does not warrant against, and shall not be responsible for any product failure, malfunction, or damage attributable to the following:

1. Improper installation and/or failure to follow the installation instructions.
2. Use of the product beyond normal home use, or use in an application for which it was not designed.
3. Cosmetic damage, including but not limited to scratches, scuffs, or discoloration.
4. Damage caused by normal wear and tear, vandalism, accidents, or acts of nature.
5. Acts of nature or environmental conditions, including but not limited to fire, flooding, snow, ice, hurricanes, earthquakes, lightning, corrosion, mold, mildew, or staining from foreign substances such as dirt, grease, or oil.
6. Normal weathering due to exposure to sunlight, weather, or atmospheric conditions, which may cause surfaces to fade, chalk, accumulate dirt, or stain.
7. Improper operation, alteration, handling, storage, abuse, or neglect of the product.

WARRANTY SERVICE STATEMENT

Under normal household use conditions, we will repair or replace any part found to be defective free of charge at our sole discretion.

Any repair or replacement does not extend or renew the original warranty period; coverage will apply only to the remaining portion of the original product warranty.

This warranty is valid only for the original purchaser and is non-transferable. Proof of original purchase is required to process all warranty claims.

INFORMATION REQUIRED FOR REPLACEMENT PARTS

When requesting replacement parts, please have the following information available:

1. Order ID;
2. Description of the part(s) (photos or videos are helpful);
3. Part number;
4. Date of purchase;

11. Workout Guide

This routine helps improve flexibility and reduce muscle tension. Remember to perform each stretch gently and avoid bouncing or pushing too hard.



1. Stretch Down:

Slightly bend your knees and slowly bend your body downward.Relax your back and shoulders, and try to extend your hands toward your toes.Hold for 10–15 seconds, then rest for a few seconds. Repeat 3 times.



2. Hamstring Stretch:

Sit on a clean mat. Straighten one leg, and bend the other leg inward so that the sole of the foot rests against the inner thigh of the straightened leg.

With the hand on the same side, reach toward the toes of the straightened leg.

Hold for 10–15 seconds, then rest for a few seconds. Switch legs and repeat.



3. Calf & Achilles Stretch:

Stand facing a wall with both hands placed against it.

Step one foot forward and keep the back leg straight, with both heels flat on the floor, while leaning toward the wall.

Hold for 10–15 seconds, then rest for a few seconds.

Repeat 3 times for each leg.



4. Quadriceps Stretch:

Hold your body steady by placing one hand against a wall.

With the other hand, reach back to grasp the ankle of the same leg and gently pull it toward your hip until you feel a stretch in the front of your thigh.

Hold for 10–15 seconds, then rest for a few seconds. Switch legs and repeat.



5. Inner thigh stretch:

Sit on the floor with the soles of your feet pressed together and your knees gently lowered toward the floor.

Hold for 10–15 seconds, then rest for a few seconds.

Repeat 3 times.

Sport makes me different

IMPORTANT: Read all instructions carefully before using this product. Retain this owner's manual for future reference. The specifications of this product may vary from this photo, subject to change without notice.

Email: support@ypoofitness.com
Hot line: 1-844-977-0007

support@ypoofitness.com