Form No. 3466-804 Rev A

Electric Deck Lift Kit

Z Master® 4000 Series

Model No. 161-3550

Installation Instructions

Installation

Loose Parts

Use the chart below to verify that all parts have been shipped.

Procedure	Description	Qty.	Use
1	No parts required	–	Prepare the machine.
2	No parts required	–	Remove the left side pod and fuel-tank cap.
3	No parts required	–	Remove the existing left motion-control lever.
4	No parts required	–	Remove the deck-lift spring.
5	Left motion-control lever	1	Install the new left motion-control lever.
6	Drilling template	1	Drill holes into the frame using the provided template.
7	Button-head cap screws Locknuts Bracket Actuator pivot pin	3 2 1 1	Install the actuator brackets and rear-lift hardware.
8	Deck lift wire harness Push-mount fastener Relay Taptite screw	1 1 2 1	Route the wire harness and install the relays.
9	No parts required	–	Install the left side pod and fuel-tank cap.
10	No parts required	–	Connect the wire harness.
11	Actuator Pin clip Shoulder screw	1 1 1	Install the actuator.
12	No parts required	–	Remove the transport lock.
13	No parts required	–	Check the mower deck height of cut and rake.

Note: Determine the left and right sides of the machine from the normal operating position.

© 2023—The Toro® Company
8111 Lyndale Avenue South
Bloomington, MN 55420

Register at www.Toro.com.

Original Instructions (EN)
Printed in the USA
All Rights Reserved

3466-804

1

Preparing the Machine

No Parts Required

Procedure

1. Park the machine on a level surface.
2. Disengage the blade-control switch.
3. Move the motion-control levers outward to the NEUTRAL-LOCK position.
4. Engage the parking brake.
5. Shut off the engine and remove the key.
6. Disconnect the negative battery cable.
7. Push the deck-lift pedal fully forward to lock the mower deck in the TRANSPORT position (Figure 1).

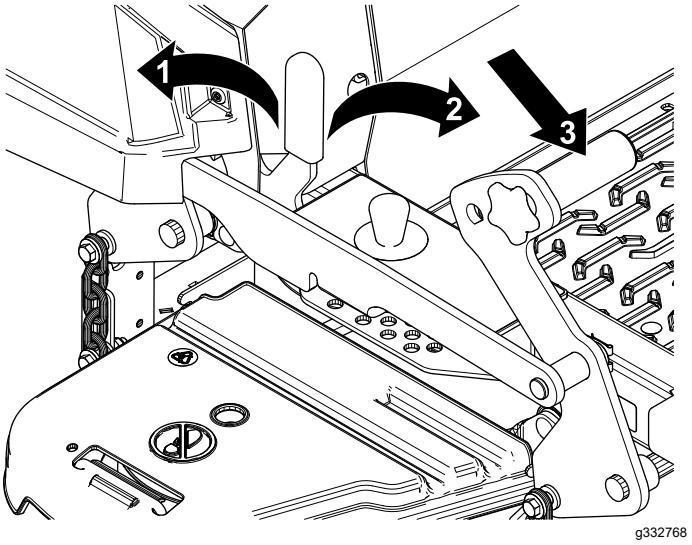

Figure 1

1. LOCK position—the mower deck locks into the transport position.
2. UNLOCK position—the mower deck does not lock into the transport position.
3. Push on the deck-lift pedal using your foot to raise the mower deck.

8. Support the mower deck using 4x4 blocks of wood.
9. Remove the height-of-cut pin from the height-of-cut bracket (Figure 2).

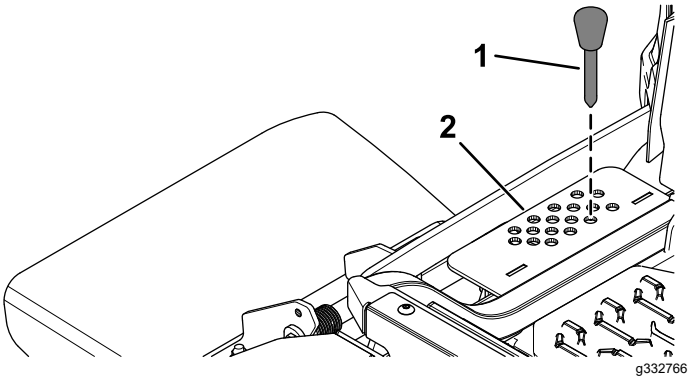

Figure 2

1. Height-of-cut pin
2. Height-of-cut bracket

2

Removing the Left Side Pod and Fuel-Tank Cap

No Parts Required

Procedure

1. Remove the fuel-tank cap from the left side pod (Figure 3).

   Retain the fuel-tank cap for later installation.

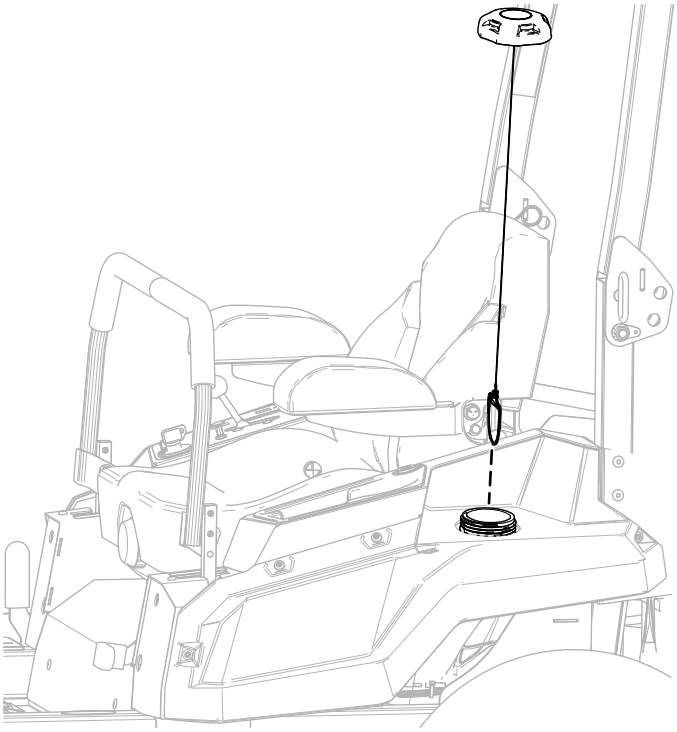

g345966

Figure 3

2. Remove the 4 shoulder screws securing the left side pod and remove the left side pod (Figure 4).

   Retain the left side pod and 4 shoulder screws for later installation.

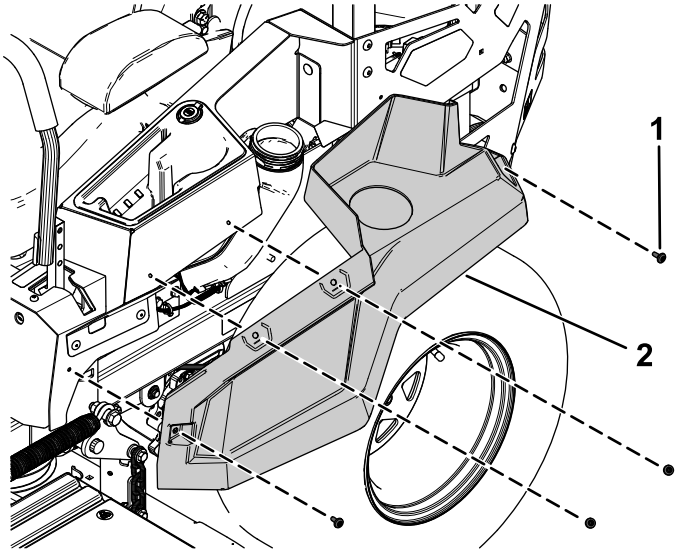

g345968

Figure 4

1. Shoulder screw
2. Left side pod

3. Install the fuel-tank cap (Figure 3).

3

Removing the Existing Left Motion-Control Lever

No Parts Required

Procedure

Remove the 2 flange-head bolts (3/8 x 1 inch) securing the existing left motion-control lever and remove the left motion-control lever (Figure 5).

Retain the 2 flange-head bolts (3/8 x 1 inch) for later installation.

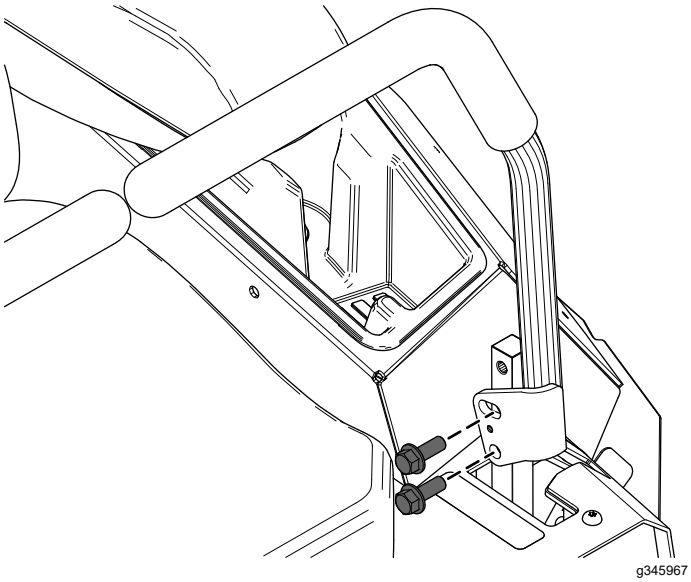

Figure 5

4

Removing the Deck-Lift Spring

No Parts Required

Procedure

1. Remove the spring bolt securing the front of the deck-lift spring (Figure 6).
2. Remove the shoulder bolt and locknut (1/2 inch) securing the rear of the deck-lift spring (Figure 6).
3. Remove the deck-lift spring (Figure 6).

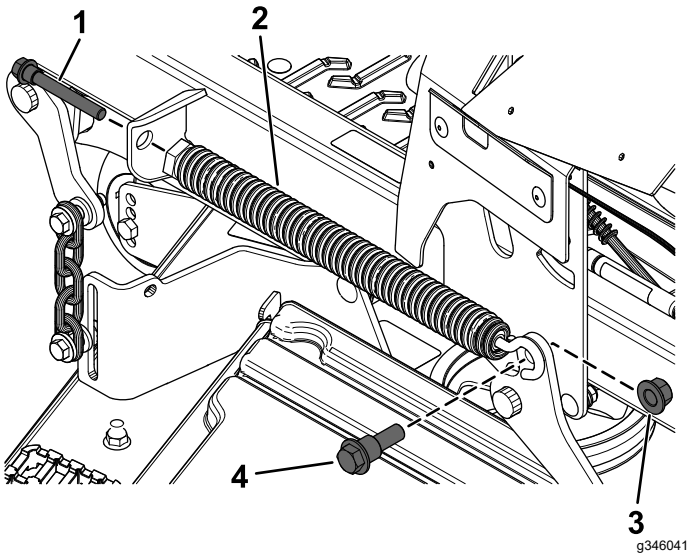

Figure 6

1. Spring bolt
2. Deck-lift spring
3. Locknut (1/2 inch)
4. Shoulder bolt

5

Installing the New Left Motion-Control Lever

Parts needed for this procedure:

1	Left motion-control lever

Procedure

1. Secure the new left motion-control lever using the previously removed 2 flange-head bolts (3/8 x 1 inch) as shown in Figure 7.

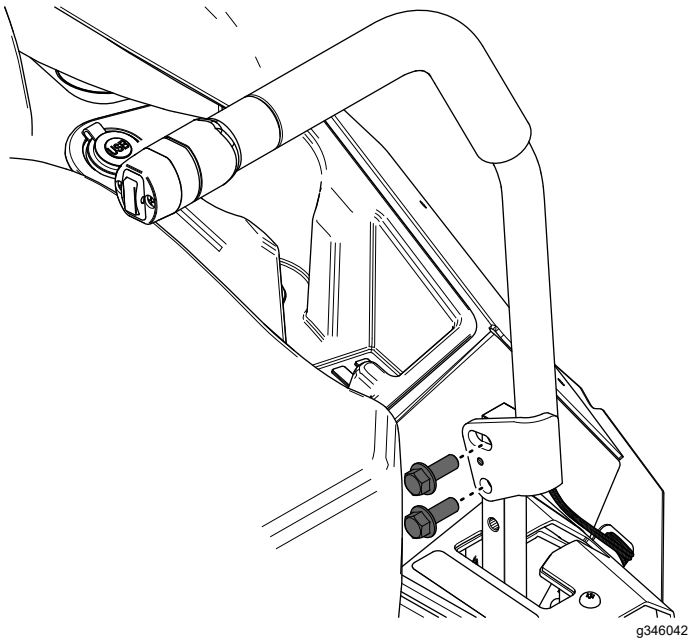

g346042

Figure 7

2. Route the wire harness on the motion-control lever through the hole in the left cover plate (Figure 8).
3. Secure the wire harness to the notch in the left motion-control plate (Figure 8).

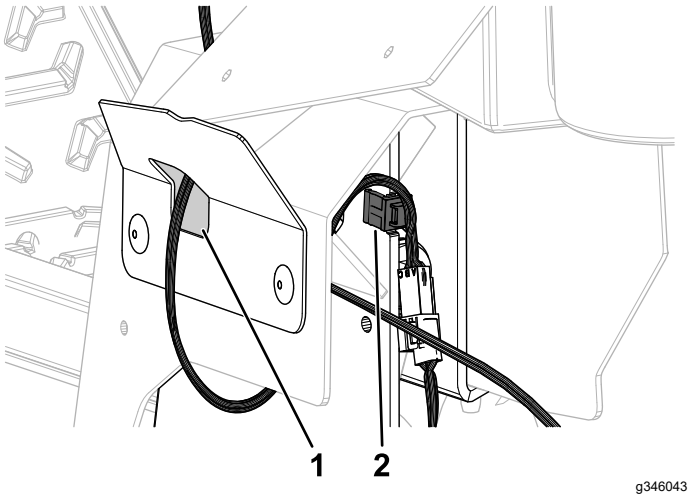

g346043

Figure 8

1. Route the harness through the opening in the left cover plate here.
2. Secure the wire harness to the notch here.

6

Drilling the Frame

Parts needed for this procedure:

1	Drilling template

Procedure

1. Install the drilling template onto the frame tube. Ensure the template is flush to the spring bracket.

   ⚠ WARNING

   Using a drill without proper eye protection may allow debris to enter the eye, causing injury.

   When drilling, always wear eye protection.

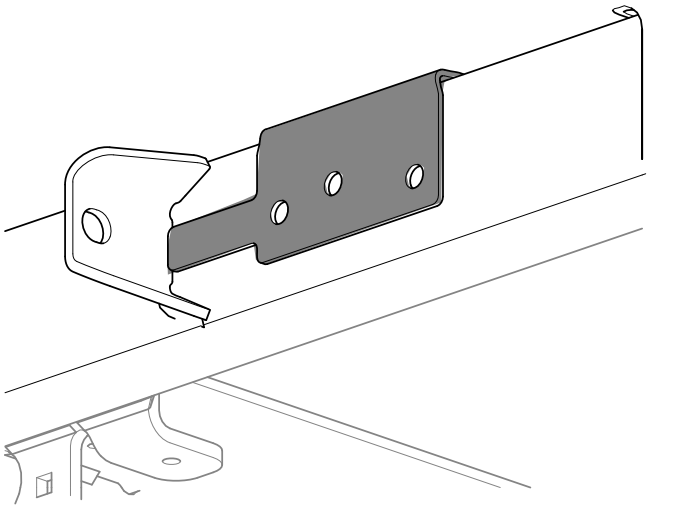

g469032

Figure 9

2. Drill holes into the frame using a Letter X drill bit.

   Important: **Do not drill completely through one side. Drill from one side and then finish drilling from the other side.**

3. Remove the drilling template from the frame tube.

7

Installing the Actuator Brackets

Parts needed for this procedure:

3	Button-head cap screws
2	Locknuts
1	Bracket
1	Actuator pivot pin

Procedure

1. Install the bracket with 3 button-head cap screws and 2 locknuts.

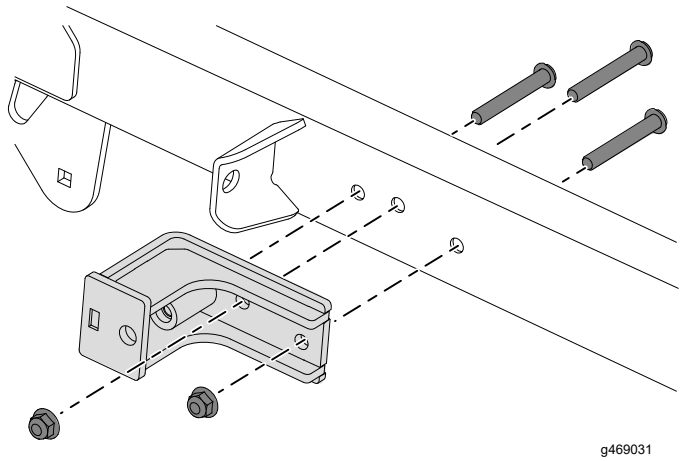

g469031

Figure 10

2. Install the actuator pivot pin.

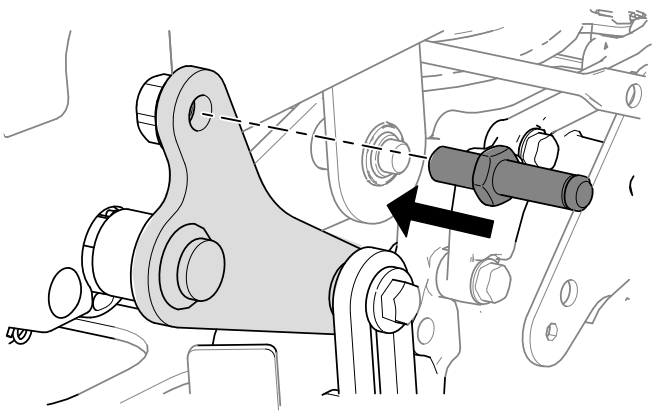

g469030

Figure 11

8

Routing the Wire Harness and Installing the Relays

Parts needed for this procedure:

1	Deck lift wire harness
1	Push-mount fastener
2	Relay
1	Taptite screw

Procedure

1. Install the front push-mount fastener into the parking-brake lever bracket (Figure 12).

   Note: The rear push-mount fastener is already installed.

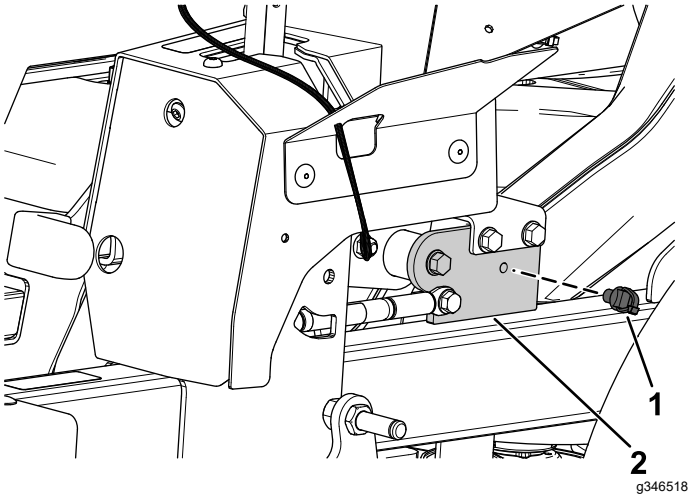

Figure 12

1. Push-mount fastener
2. Parking-brake lever bracket

2. Route the wire harness (Figure 13) along the left side of the frame, through the push-mount fastener you installed in step 1.

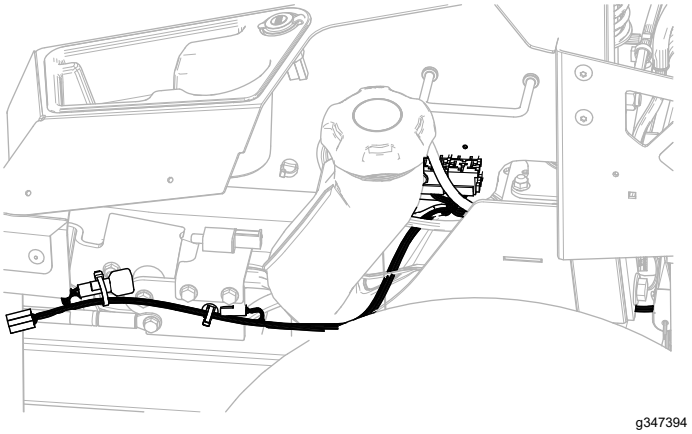

Figure 13

3. Install the second push-mount fastener into the rear fuel-tank bracket (Figure 14).

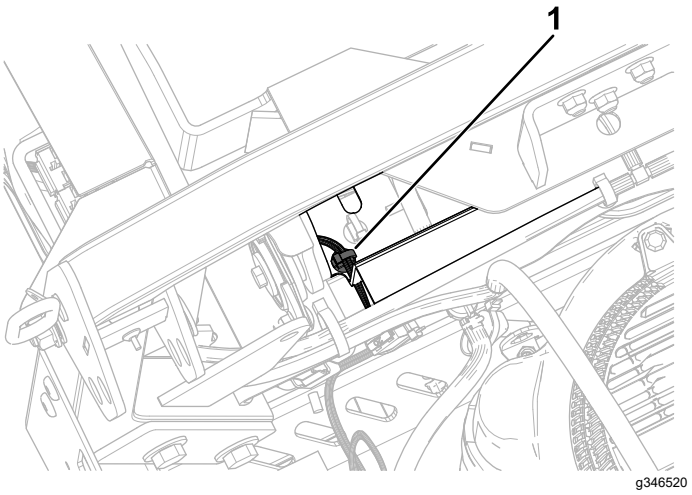

Figure 14

1. Push-mount fastener

4. Secure the wire harness near the relays using the taptite screw (Figure 15).

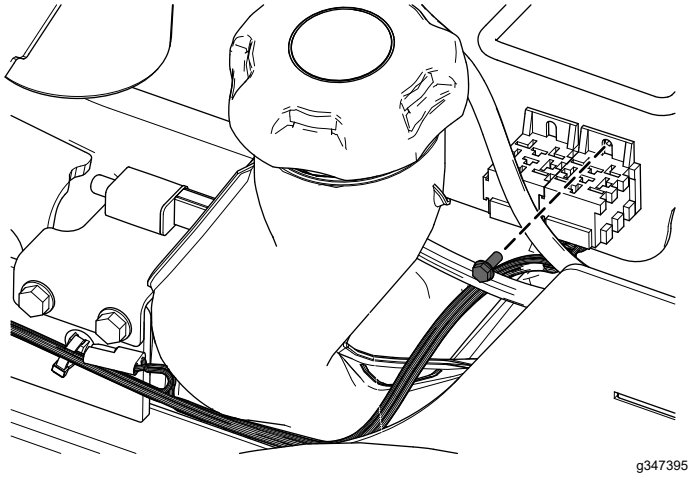

g347395

Figure 15

5. Install the 2 relays (Figure 16).

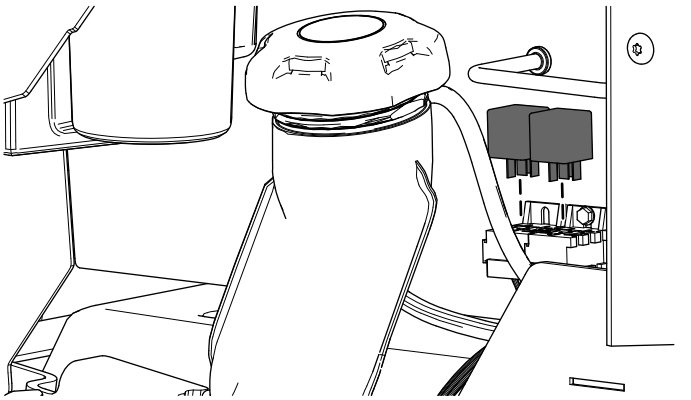

g347393

Figure 16

9

Install the Left Side Pod and Fuel-Tank Cap

No Parts Required

Procedure

1. Remove the fuel-tank cap (Figure 3).
2. Secure the left side pod using the previously removed 4 shoulder screws (Figure 4).
3. Install the fuel-tank cap (Figure 3).

10

Connecting the Wire Harness

No Parts Required

Procedure

1. Connect the kit wire harness to the machine wire harness connector labeled CONN-DECK LIFT.
2. Connect the kit wire harness connector to the new left motion-control lever connector (Figure 17).

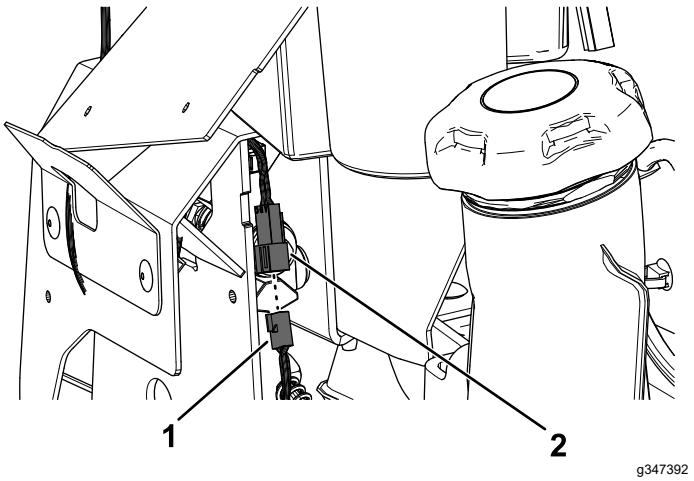

g347392

Figure 17

1. Kit wire harness connector
2. New left motion-control lever connector

3. Connect the kit wire harness to the actuator.

4. Pull the boot cover off the positive battery terminal.
5. Remove the nut from the positive battery terminal and install the kit wire harness positive terminal ring onto the bolt (Figure 18).
6. Secure the positive terminal ring using the previously removed nut (Figure 18).
7. Install the boot cover over the positive battery terminal.
8. Remove the nut from the negative battery terminal and install the kit wire harness negative terminal ring onto the bolt (Figure 18).
9. Secure the negative terminal ring using the previously removed nut (Figure 18).

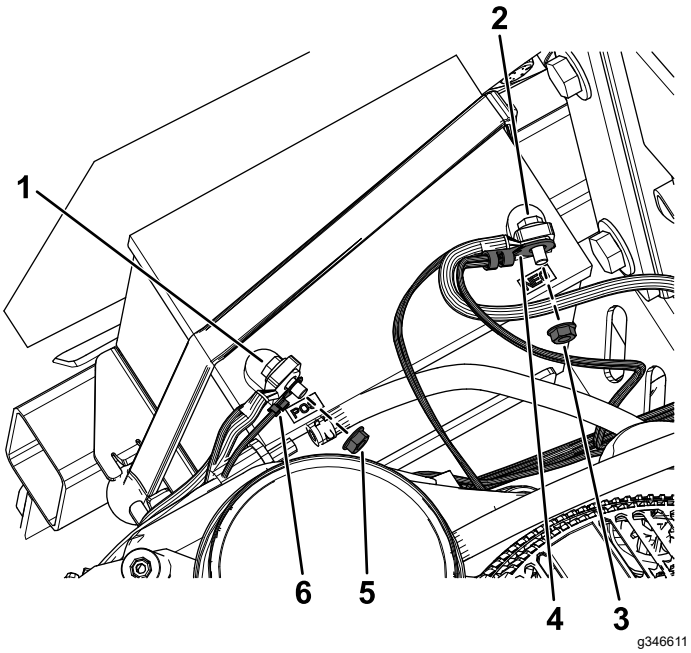

Figure 18

1. Positive terminal bolt
2. Negative terminal bolt
3. Negative terminal nut
4. Kit wire harness negative terminal ring
5. Positive terminal nut
6. Kit wire harness positive terminal ring

11

Installing the Actuator

Parts needed for this procedure:

1	Actuator
1	Pin clip
1	Shoulder screw

Procedure

1. Plug the actuator wire harness into the deck lift wire harness.

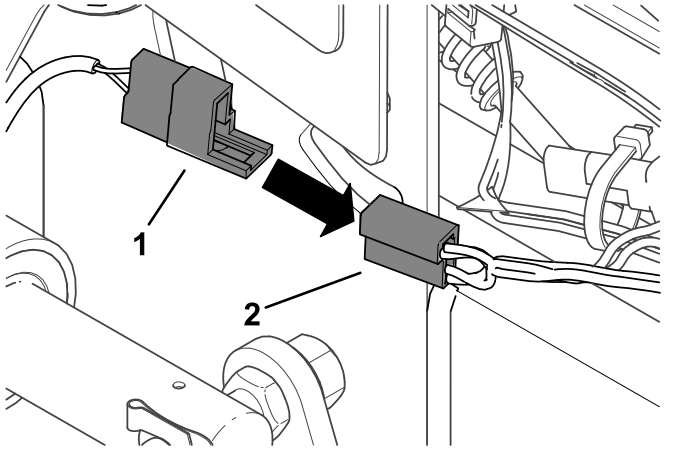

Figure 19

1. Actuator wire harness
2. Electric deck lift wire harness

2. Install the actuator.

   Note: If the actuator does not line up with the pin, power up the actuator and extend or retract as needed.

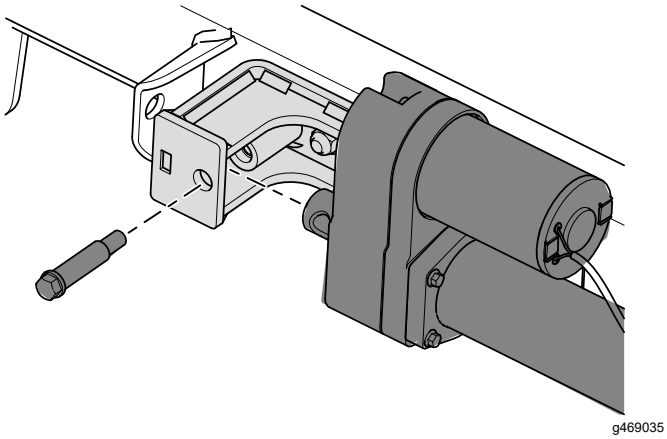

Figure 20

3. Secure the actuator to the rear deck-lift arm using the pin clip.

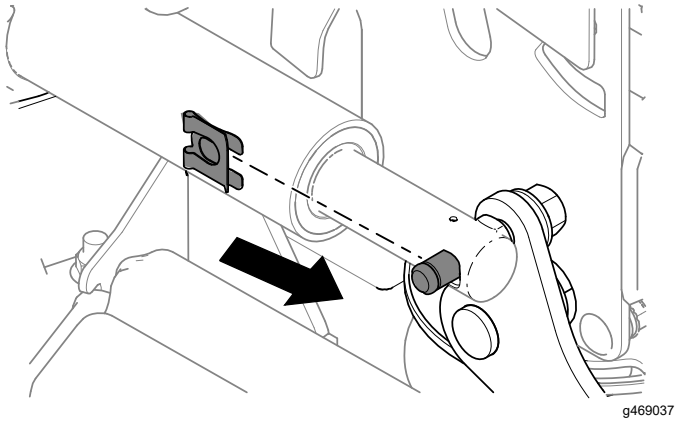

Figure 21

4. Rotate the actuator upward and align the actuator with the hole in the outer actuator bracket.

   If the holes **do not** align, turn the machine on, and carefully press the deck-lift switch on the motion-control lever up or down until the holes align.

12

Removing the Transport Lock

No Parts Required

Procedure

1. Push the deck-lift switch upward until you hear a ratcheting sound or clicking sound from the actuator.
2. Turn off the machine.
3. Remove the bolt, washer, and transport lock (Figure 22).

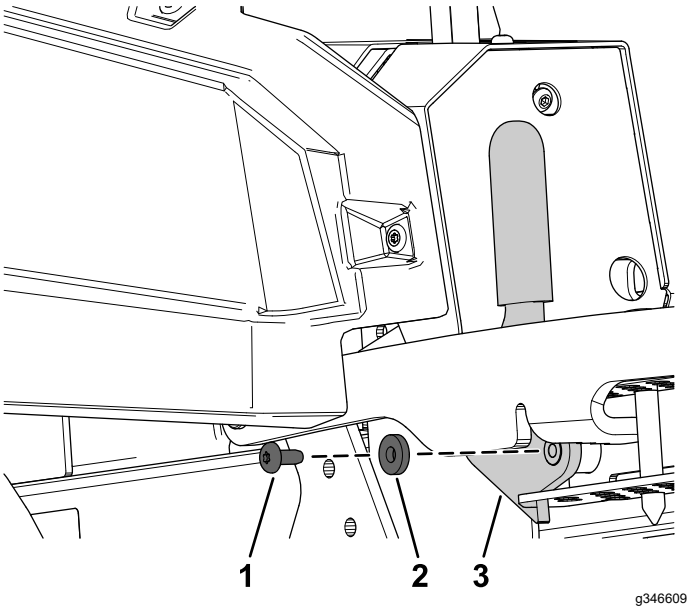

Figure 22

1. Bolt
2. Washer
3. Transport lock

13

Checking the Mower Deck Height of Cut and Rake

No Parts Required

Procedure

Refer to the Adjusting the Side-to-Side Leveling and the Blade Slope procedure in the *Operator's Manual*.

Operation

Machine Transport with Electric Deck Lift

1. Push up on the deck-lift switch until the deck is completely raised.
2. Insert the height-of-cut pin into the 140 mm (5-1/2 inches) height-of-cut position of the bracket.

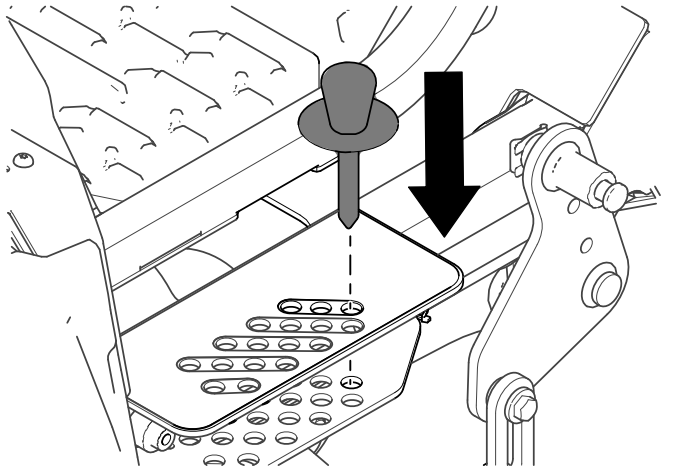

g469154

Figure 23

3. Push down on the deck-lift switch until the height-of-cut linage slightly contacts the height-of-cut pin.

   Important: **Transporting the machine without the deck resting on the height-of-cut pin will cause unnecessary damage to the deck lift actuator.**

Adjusting the Height of Cut

1. Push up on the deck-lift switch.

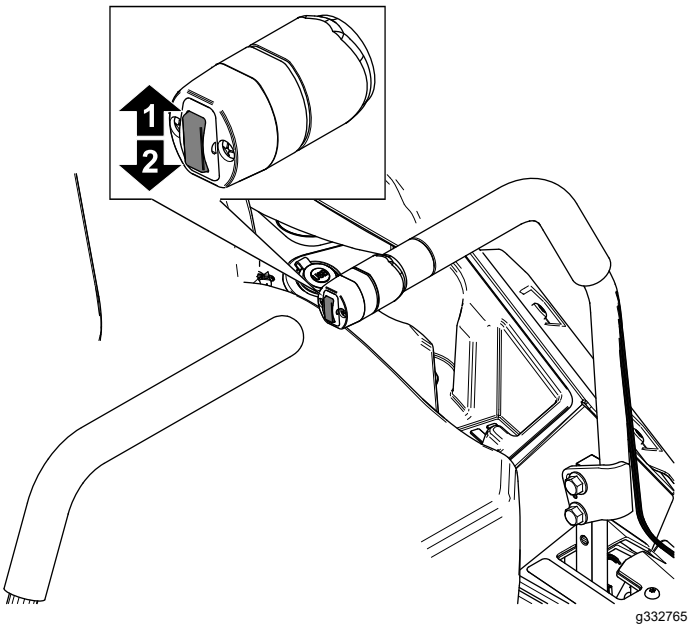

g332765

Figure 24

1. Push up to raise the deck.
2. Push down to lower the deck.

2. Select a hole in the height-of-cut bracket corresponding to the height of cut desired, and insert the pin.
3. Push down on the deck-lift switch until the height-of-cut linkage slightly contacts the height-of-cut pin.

   Note: Too much contact between the height-of-cut linkage and height-of-cut pin can negatively affect the mower deck height of cut and leveling.

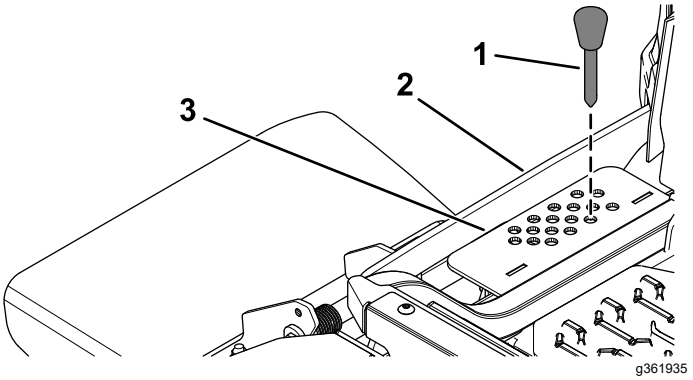

g361935

Figure 25

1. Height-of-cut pin
2. Height-of-cut linkage
3. Height-of-cut bracket