INTRODUCTION

Congratulations on your selection of a Honda lawn mower! We are certain you will be pleased with your purchase of one of the finest lawn mowers on the market.

We want to help you get the best results from your new mower and to operate it safely. This manual contains the information on how to do that; please read it carefully.

We suggest you read the *DISTRIBUTOR'S LIMITED WARRANTY* (page 19) and *EMISSION CONTROL SYSTEM WARRANTY* (page 20) to fully understand coverage and your responsibilities of ownership.

When your mower needs scheduled maintenance, keep in mind that an authorized Honda servicing dealer is specially trained in servicing Honda mowers and is supported by the parts and service divisions of American Honda. Your Honda dealer is dedicated to your satisfaction and will be pleased to answer your questions and concerns.

Keep this owner's manual handy so you can refer to it at any time. This owner's manual is considered a permanent part of the lawn mower and should remain with the lawn mower if resold.

The information and specifications included in this publication were in effect at the time of approval for printing. American Honda Motor Co., Inc. reserves the right, however, to discontinue or change specifications or design at any time without notice and without incurring any obligation whatever. No part of this publication may be reproduced without written permission.

SAFETY MESSAGES

Your safety and the safety of others are very important. We have provided important safety messages in this manual and on the mower. This information alerts you to potential hazards that could hurt you or others. Please read these messages carefully.

Of course, it is not practical or possible to warn you about all the hazards associated with operating or maintaining a lawn mower. You must use your own good judgment.

You will find important safety information in a variety of forms:

- **Safety Labels** – on the lawn mower.
- **Instructions** – how to use this mower correctly and safely.
- **Safety Messages** – preceded by a safety alert ⚠ symbol and one of three signal words: DANGER, WARNING, or CAUTION. These signal words mean:

⚠ **DANGER**	You WILL be KILLED or SERIOUSLY HURT if you don't follow instructions.
⚠ **WARNING**	You CAN be KILLED or SERIOUSLY HURT if you don't follow instructions.
⚠ **CAUTION**	You CAN be HURT if you don't follow instructions.

Each message tells you what the hazard is, what can happen, and what you can do to avoid or reduce injury.

- **Damage Prevention Messages** – You will also see other important messages that are preceded by the word NOTICE. This word means:

NOTICE	Your lawn mower or other property can be damaged if you don't follow instructions.

© 2003-2009 American Honda Motor Co., Inc.—All Rights Reserved

31VH7V23
00X31-VH7-V230

EM5 K2

POM31VH7V23
IPC.2,430.2009.02
PRINTED IN U.S.A.

HONDA

OWNER'S MANUAL
HRX217VKA



Click here to save this manual to your computer.

⚠ WARNING: ⚠

The engine exhaust from this product contains chemicals known to the State of California to cause cancer, birth defects, or other reproductive harm.

CONTENTS*

INTRODUCTION 1
SAFETY MESSAGES 1
LAWN MOWER SAFETY 2
IMPORTANT MESSAGE TO PARENTS 2
SAFETY LABEL LOCATIONS 2
SETTING UP YOUR MOWER 3
CONTROL LOCATIONS 4
BEFORE OPERATION 4
IS YOUR LAWN MOWER READY TO GO? 4
CHECK YOUR MOWING AREA 4
GET THE MOWER READY 5
OPERATION 7
SAFE OPERATING PRECAUTIONS 7
STARTING THE ENGINE 7
OPERATING THE CONTROLS FOR MOWING 7
STOPPING THE ENGINE 7
SAFE MOWING PRACTICES 8
SERVICING YOUR LAWN MOWER 8
MAINTENANCE SAFETY 8
MAINTENANCE SCHEDULE 9
BLADES 9
GRASS BAG CLEANING AND REPLACEMENT 10
ENGINE MAINTENANCE 11
REFUELING 13
TRANSPORTING 13
STORAGE 13
TAKING CARE OF UNEXPECTED PROBLEMS 15
TECHNICAL INFORMATION 16
SERIAL NUMBER LOCATIONS 16
CARBURETOR MODIFICATION FOR HIGH ALTITUDE OPERATION 16
EMISSION CONTROL SYSTEM 16
AIR INDEX 17
SPECIFICATIONS 17
CONSUMER INFORMATION 18
REPLACEMENT PARTS, OPTIONAL EQUIPMENT, AND SERVICE ITEMS 18
DEALER LOCATOR INFORMATION 18
CUSTOMER SERVICE INFORMATION 18
DISTRIBUTOR'S LIMITED WARRANTY 19
ACCESSORIES, REPLACEMENT PARTS, AND APPAREL WARRANTY 19
EMISSION CONTROL SYSTEM WARRANTY 20

* For more information regarding cable adjustment or how to mow your lawn, see FAQs at www.hondapowerequipment.com/faq

LAWN MOWER SAFETY

Most injuries or property damage with walk-behind mowers can be prevented if you follow all instructions in this manual and on the mower. The most common hazards are discussed below, along with the best way to protect yourself and others.

Avoid Rotating Blades

Rotating blades can cause serious cuts and even amputate fingers, hands, toes, or feet. Keep away from the mower deck whenever the engine is running. If you need to adjust the cutting height or work around the deck for any other reason, always shut off the engine. Wear heavy gloves and disconnect the spark plug cap when you need to clean the mower deck or handle the blades.

Clear Mowing Area

Mower blades can throw rocks and other objects with enough force to cause serious injury. Before mowing, carefully inspect the area and remove all sticks, stones, pieces of wire, and other loose objects. Never operate the blades over gravel.

Keep Shields in Place

Guards and shields are designed to protect you from being hit by thrown objects and from hot engine parts and moving components. For your safety and the safety of others, keep all shields in place when the engine is running.

Refuel with Care

Gasoline is extremely flammable and gasoline vapor can explode. Refuel only outdoors in a well-ventilated area with the engine OFF. Never smoke near gasoline and keep other flames and sparks away. Always store gasoline in an approved container.

Wear Protective Clothing

Wearing protective clothing will reduce your risk of injury. Long pants and eye protection reduce the risk of injuries from thrown objects. Sturdy shoes with aggressive soles will help protect your feet and give you better traction on slopes or uneven ground.

Turn Engine Off When Not Mowing

If you need to leave the mower for any reason, even just to inspect the lawn ahead, release the blade control lever to stop the engine.

IMPORTANT MESSAGE TO PARENTS

YOUR CHILD'S SAFETY IS VERY IMPORTANT to Honda. That's why we urge you to read this message before letting your child operate this lawn mower. Lawn mowers are tools, not toys. As with any equipment, bad judgments can result in serious injuries. You can help prevent injuries or property damage by making good decisions about if, when, and how your child operates this equipment.

The first question you'll need to ask is whether your child is capable of operating this mower safely. Remember, young people vary widely, and AGE IS NOT THE ONLY FACTOR.

Physically, a child must be LARGE ENOUGH AND STRONG ENOUGH to easily start the mower and control its direction. The child also needs enough size, strength, and coordination to comfortably reach and operate the controls.

A tougher question you need to ask is if your child has enough MATURITY AND RESPONSIBILITY to safely operate this mower. Does the young person think through problems and come to logical solutions? Be honest! Anyone who takes unnecessary risks and doesn't obey rules should not operate this lawn mower.

If you decide that your son or daughter can handle the mower safely, CAREFULLY READ THE OWNER'S MANUAL with your child. Make sure you both understand all instructions and safety information. Also, be sure your child wears sturdy shoes and other protective clothing when operating or handling the mower.

SUPERVISION is also very important. Walk with your child during the first few minutes of mowing. Even after he or she has become confident with the mower, do not let him or her use the mower without good adult supervision. An adult should also be present during refueling and maintenance. In fact, it's up to the adult owner to make sure that the mower is properly maintained and kept in safe operating condition.

By always placing safety first, your child will acquire useful skills and a sense of accomplishment. And you'll both get the best results from your lawn mower.

SAFETY LABEL LOCATIONS

These labels warn you of potential hazards that can cause serious injury. Read them carefully. If a label comes off or becomes hard to read, contact an authorized Honda servicing dealer for a replacement.

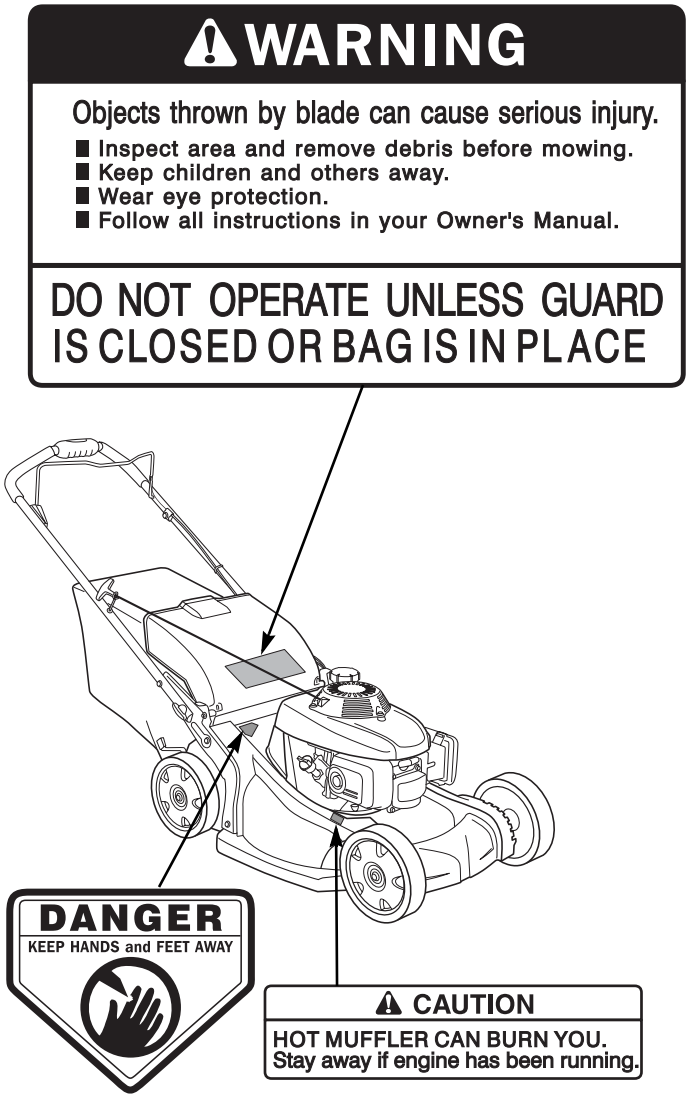

SETTING UP YOUR MOWER

Unpacking

Remove all the cardboard from around the handlebar.

Handlebar Setup

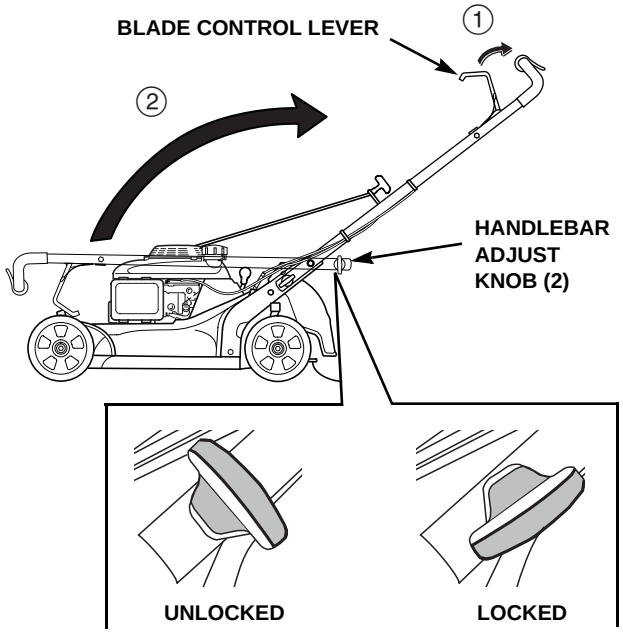

1. With the handlebar adjust knobs in the unlocked position, depress the blade control lever and raise the handlebar into the mowing position.
2. Align the adjust knobs with one of the three holes on the handle stay. Setting the adjust knobs in the lowest holes raises the handlebar to its highest position, and setting the adjust knobs in the highest holes lowers the handlebar to its lowest position.
3. Turn the adjusting knobs 90 degrees into the lock position, and the pins will spring into the holes and lock into position.

Grass Bag Assembly

1. Assemble the grass bag frame by pulling the support legs outward and sliding them into the eyelets as shown.
2. Install the assembled frame into the fabric grass bag, keeping the bag frame handle exposed.

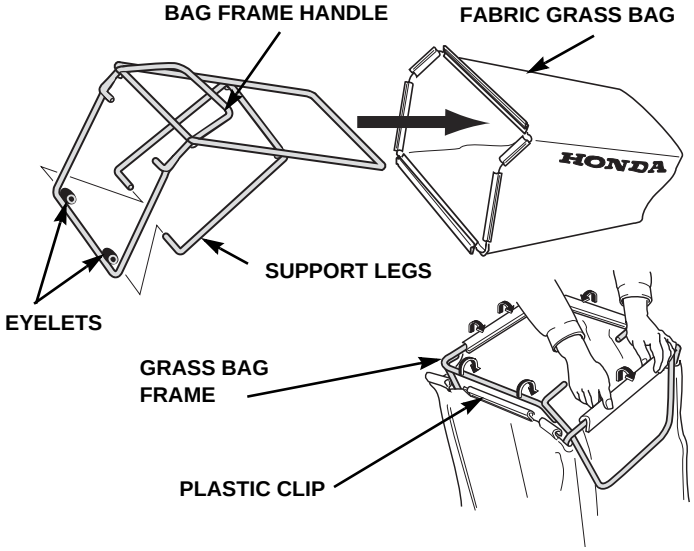

3. Install the plastic clips over the bag frame as shown.
4. Lift the discharge guard and install the grass bag.

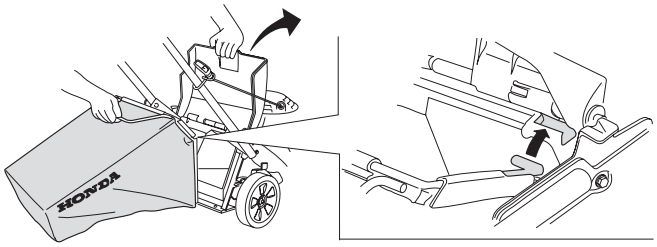

Engine Oil

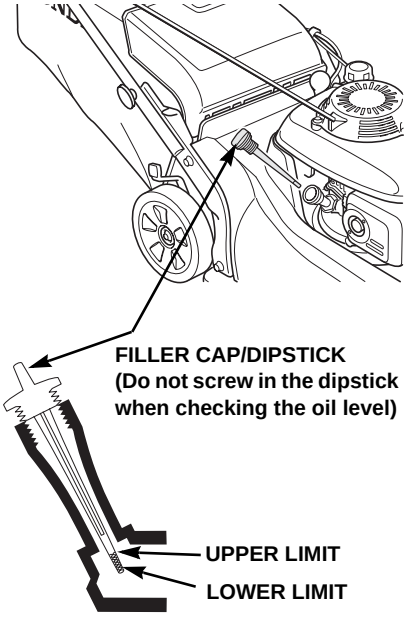

The mower is shipped **WITHOUT OIL** in the engine.

A bottle of oil is included in the box with your mower. Add the entire contents of the oil bottle into the oil filler opening.

All Honda engines are run at the factory prior to packaging. Most of the oil is removed prior to shipment; however, some oil remains in the engine. The amount of oil left in the engine varies.

If not using the supplied oil, add enough SAE 10W-30 API service category SJ or later oil to bring the oil level between the upper and lower limit marks on the dipstick as shown.

Do not overfill the engine with oil. If the engine is overfilled, the excess oil may get transferred to the air cleaner housing and air filter.

After filling the engine with oil, remove the hang tag near the recoil starter grip that says "*The engine has no oil. A container of oil is in the shipping box*."

Fuel

Refer to page 13.

Before Using Your Lawn Mower

Before using the lawn mower, all mower operators must read the following sections:

- **LAWN MOWER SAFETY** (page 2)
- **CONTROL LOCATIONS** (page 4)
- **BEFORE OPERATION** (page 4)
- **OPERATION** (page 7)
- **MAINTENANCE SCHEDULE** (page 9)

You can also find additional information on the Honda power equipment web site. Visit www.hondapowerequipment.com/faq/.

Please Register Your Lawn Mower

If your dealer did not collect registration information from you, please take a few minutes and register your purchase with Honda. This allows us to contact you with any important updates regarding your mower. Your information will remain confidential. It will not be released to any other company or organization. Please note, registration is not required to obtain warranty service.

You can register by completing and mailing the included registration card, or go online to www.hondapowerequipment.com and click on Product Registration.

CONTROL LOCATIONS

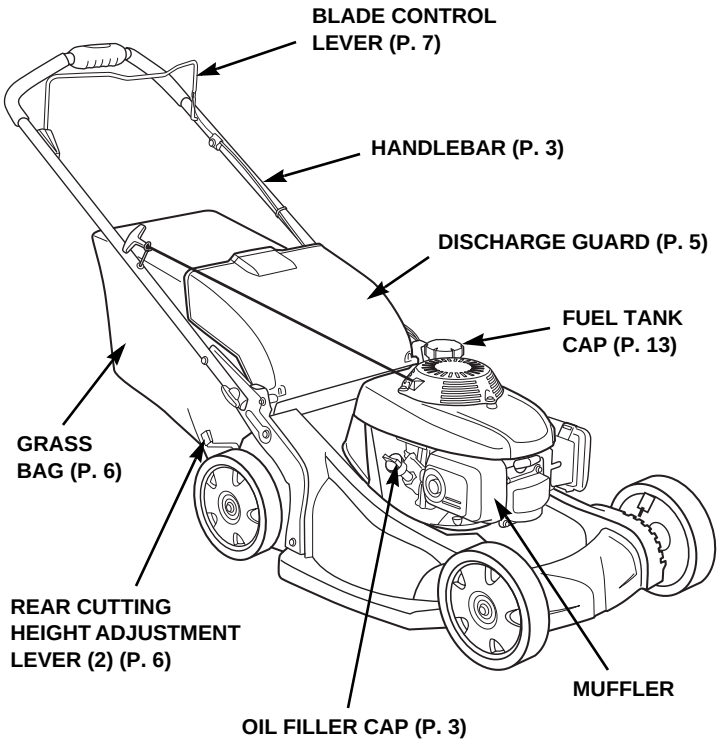

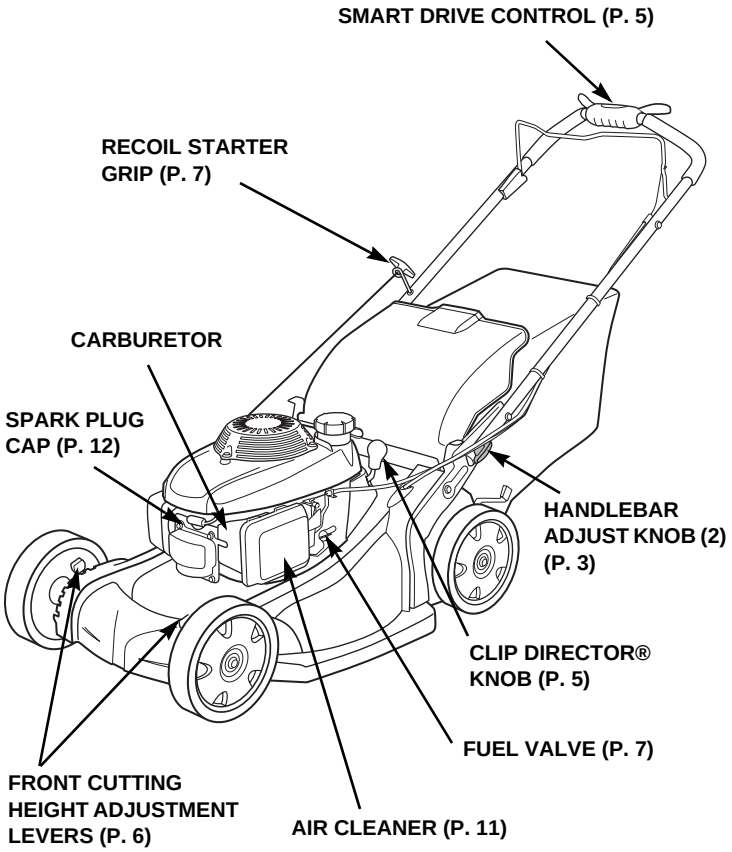

BEFORE OPERATION

Your safety is your responsibility. A little time spent in preparation will significantly reduce your risk of injury.

Read and understand this manual. Know what the controls do and how to operate them.

Familiarize yourself with the lawn mower and its operation before you begin using it. Know how to shut off the lawn mower quickly in case of an emergency.

IS YOUR LAWN MOWER READY TO GO?

For your safety, and to maximize the service life of your lawn mower, it is very important to take a few moments before you operate the lawn mower to check its condition. Be sure to take care of any problem you find or have your servicing dealer correct it before you operate the lawn mower.

⚠ WARNING

Improperly maintaining this lawn mower or failing to correct a problem before operation could cause a malfunction in which you could be seriously injured.

Always perform a pre-operation inspection before each operation and correct any problem.

Before beginning your pre-operation checks, be sure the lawn mower is on a level surface.

Check the General Condition of the Lawn Mower

- Look around and underneath the lawn mower for signs of oil or gasoline leaks.
- Look for signs of damage.
- Check each control for proper operation.
- Check the blades for wear. Replace as necessary (page 9).
- Check that the blade bolts are tight (page 10).
- Check that all nuts, bolts, and screws are tightened.

Check the Engine

- Check the air cleaner (page 11) and oil level (page 11).
- Check the fuel level (page 13). Starting with a full tank will help eliminate or reduce operating interruptions for refueling.

CHECK YOUR MOWING AREA

For your safety and the safety of others, always inspect the area before operating the lawn mower.

Objects

Anything that can be picked up by the blades and thrown is a potential hazard to you and others. Look for things like stones, sticks, nails, and wire, and remove them from the mowing area.

People and Pets

People and animals near the work area can move into your lawn mower's path or into a position where they could be struck by thrown objects. Clear the area of pets and people, especially children. Their safety is your responsibility.

Work Area

Check the condition of the grass. Adjust your lawn mower ground speed and mowing swath accordingly.

GET THE MOWER READY

Handlebar Height Adjustment

Adjust handlebar height for a comfortable operating position (page 3).

Smart Drive™ Control

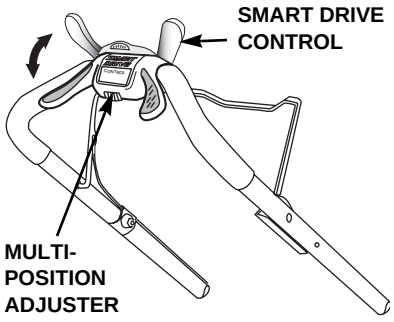

The Smart Drive control can be adjusted up or down into any one of five positions.

Do not attempt to adjust the position of the Smart Drive control while the mower is in motion.

Slide the multi-position adjuster to the left to unlock the control, move the Smart Drive control up or down into the most comfortable position, and then release the multi-position adjuster and allow it to engage.

Clip Director®

Adjust the Clip Director knob in any one of the ten positions to achieve the desired mowing results.

To adjust the Clip Director knob, pull the knob downward and towards the rear of the mower. The knob adjusts a sliding door from the fully open BAG position to the fully closed MULCH position.

Some grass accumulation in the discharge opening is normal when the Clip Director is fully closed. To remove this grass, close the discharge guard, fully open the Clip Director, engage the blade control lever, and start the engine.

If a high resistance is noticed when moving the Clip Director knob from side-to-side, excessive grass may have built up on top of the sliding door.

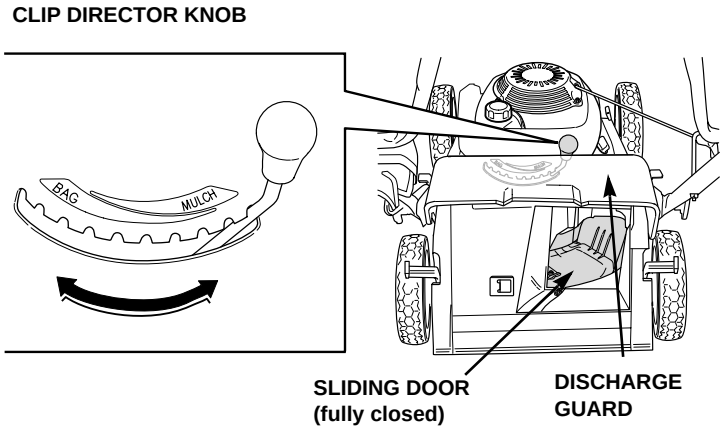

IMPORTANT SAFETY PRECAUTION

Always release the blade control lever and disconnect the spark plug cap (page 12) before lifting the discharge guard to view or clean around the sliding door. This will prevent contact with the rotating blades and prevent objects from being thrown into the discharge area.

Sliding Door Position

The sliding door can be positioned to produce different mowing results. If the preferred sliding door position is unknown, install the grass bag and begin mowing with the Clip Director knob all the way to the BAG position. Check the appearance of the lawn. As the knob is moved towards the MULCH position, more grass will be recycled back into the lawn. Adjust the Clip Director knob until the desired result is achieved.

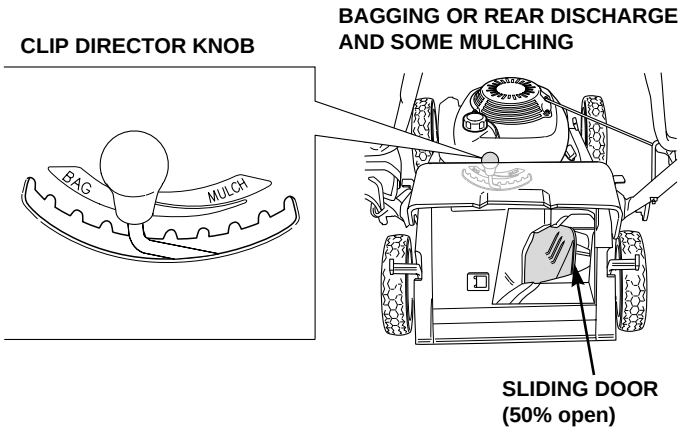

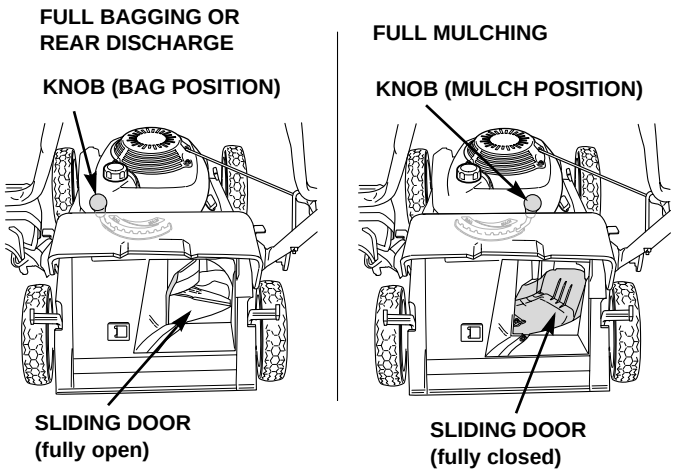

Rear Discharge

To discharge clippings to the rear, remove the grass bag and position the Clip Director knob in the BAG range. Maximum rear discharge will occur when the Clip Director knob is all the way to the left (BAG) position. As the Clip Director knob is moved toward the right (MULCH) position, less grass will be discharged through the rear discharge guard.



Fallen Leaves

Use the Clip Director to shred and collect fallen leaves for disposal. Set the front wheels so they are one or two settings higher than the rear. Set the Clip Director in position #9 (not quite full mulching), and adjust the setting from this point for best results.

Rear Shield

During normal use the rear shield is subject to deterioration and wear. Remove the grass bag and raise the discharge guard to check the rear shield for cracks or tears. If the rear shield is excessively worn, have it replaced by your authorized Honda servicing dealer.

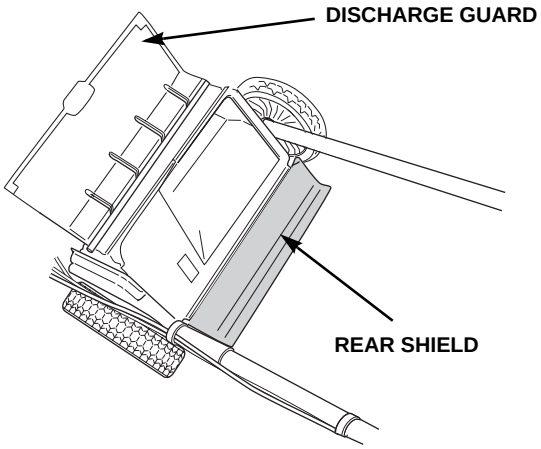

Grass Bag

A lawn mower works like a vacuum cleaner; it blows air through the bag, which traps the grass clippings. Always empty the grass bag before it becomes filled to the limit of its capacity. Bagging performance will diminish after the bag becomes about 90% filled. Also, the bag is easier to empty when it is not packed full.

You can leave the grass bag on the mower during mowing, even when full mulching is selected, to meet various mowing conditions.

Inspection

During normal use, the grass bag material is subject to deterioration and wear.

NOTICE

Frequently inspect the grass bag for tears, holes, and excessive wear. Check for necessary replacement. Make sure the new bag meets the original specifications.

Grass bag replacement is explained on page 10.

Installation

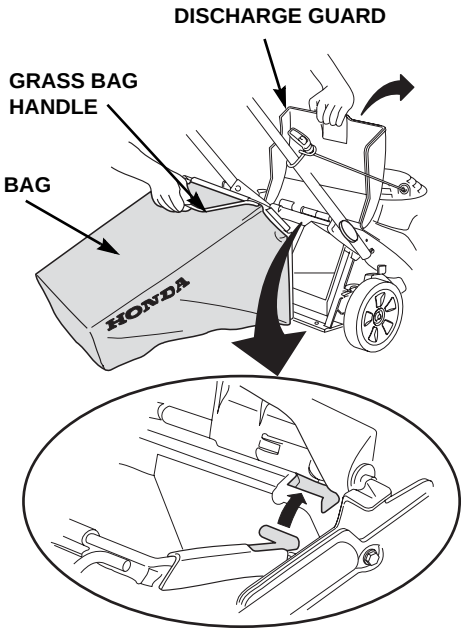

1. Raise the discharge guard and hook the grass bag onto the mower deck as shown.
2. Release the discharge guard to secure the grass bag.

Removal

1. Raise the discharge guard, grasp the grass bag handle, and remove the grass bag.
2. Release the discharge guard.
3. When the grass bag is clear of the discharge guard, you can lift it through the handlebar opening, or you can remove it to the rear of the mower below the handlebar.

Cutting Height Adjustment

Each wheel of the mower can be adjusted to one of seven settings. The cutting height figures are approximate. The actual height of cut grass will vary with lawn and soil conditions.

Move all four adjustment levers to the same position.

To adjust cutting height, pull each adjustment lever toward the wheel, and move it into another notch.

If you are not sure what cutting height to select, start with a high setting and check the appearance of the lawn after mowing a small area. Then readjust the cutting height if necessary.

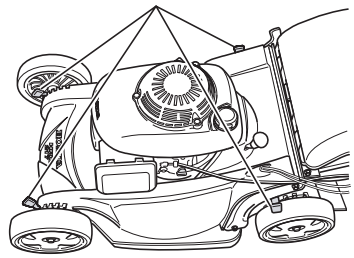

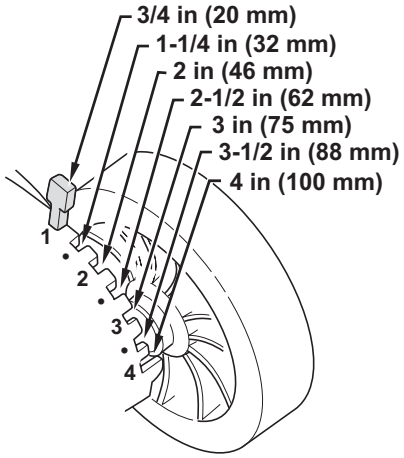

OPERATION

SAFE OPERATING PRECAUTIONS

Before operating the mower for the first time, please review *LAWN MOWER SAFETY* (page 2). Even if you have operated other mowers, take time to become familiar with how this mower works and practice in a safe area until you build up your skills. For your safety, avoid starting or operating the engine in an enclosed area, such as a garage. Your mower's exhaust contains poisonous carbon monoxide gas, which can collect rapidly in an enclosed area and cause illness or death.

STARTING THE ENGINE

Before starting, always release the Smart Drive control so that the mower will not move forward when you operate the starter.

1. Turn the fuel valve to the ON position.

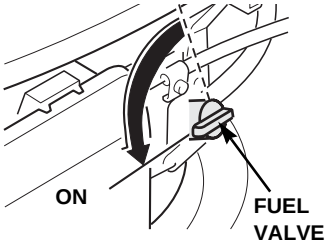

2. Pull back on the blade control lever and hold it against the handlebar.

   The lever must be against the handlebar to start the engine. The blades start to rotate when the lever is against the handlebar and the recoil starter grip is pulled.

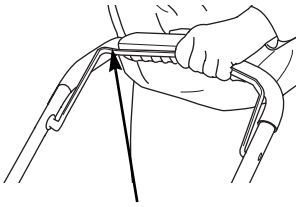

3. Pull the starter grip lightly until you feel resistance, then pull briskly. Return the starter grip gently.

   Keep your hands and feet away from the mower deck at all times when starting and running the engine.

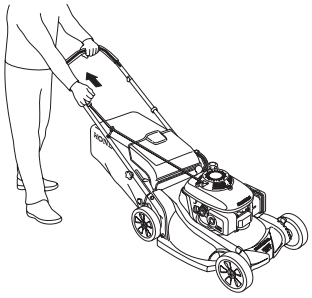

   Continue to hold the blade control lever against the handlebar; the engine will stop if you release the lever.

OPERATING THE CONTROLS FOR MOWING

Smart Drive Control

Control position adjustment is described on page 5.

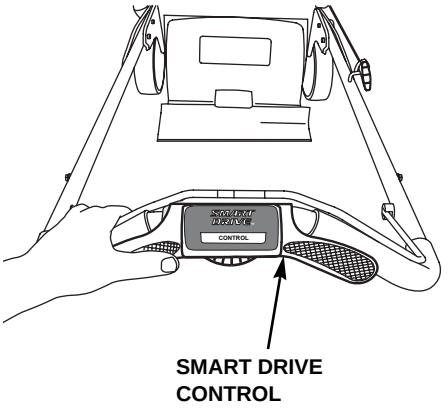

With the engine running and the blades rotating, slowly push the Smart Drive control to propel the mower forward.

Ground speed will increase as more pressure is applied to the Smart Drive control. After maximum ground speed is obtained, applying additional force will not further increase ground speed. Apply only enough pressure to achieve the desired speed.

Ground speed control sensitivity will vary with such factors as terrain, grass height, slope, and grass bag weight. For example, achieving a very slow ground speed on smooth level terrain requires very light force applied to the Smart Drive control. However, additional force may be required to achieve the same ground speed on slopes, in tall grass, or on uneven terrain. The Smart Drive control is designed to allow you to move the control to maintain the desired ground speed under constantly changing mowing conditions.

Release the Smart Drive control to disengage (stop) the rear wheels.

STOPPING THE ENGINE

1. Release the blade control lever to stop the engine.

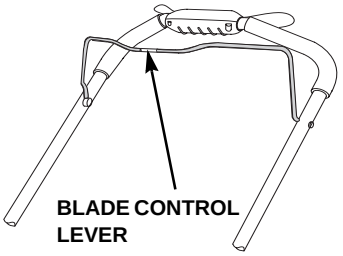

2. When the mower is not in use, turn the fuel valve to the OFF position.

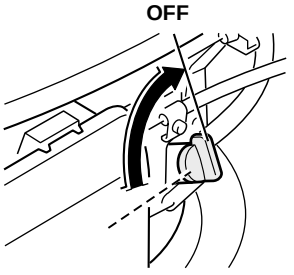

SAFE MOWING PRACTICES

For your safety, keep all four wheels on the ground and be careful to avoid losing your footing and your control of the mower. Keep a firm grip on the handlebar and walk, never run, with the mower. Be very careful when mowing uneven or rough ground.

If stuck, do not kick or shove the mower with your foot. Use the handlebar to control the mower.

⚠ WARNING

The blades are sharp and spin at high speed.

Spinning blades can cut you severely and can amputate fingers and toes.

- Wear protective footwear.
- Keep your hands and feet away from the mower deck while the engine is running.
- Stop the engine before performing any adjustment, inspection, or maintenance.

Slopes

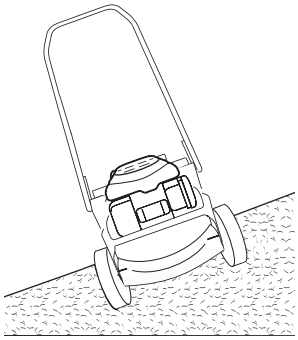

Mow across slopes, not up and down. Avoid steep slopes (more than 20°), and be careful when changing direction. Mowing on a slope when the grass is damp or wet could cause you to slip, fall, and lose control of the mower.

Obstacles

Use the side of the mower to cut close to large obstacles, such as fences or walls.

Release the Smart Drive control to disengage the drive when mowing around trees and other obstacles. Push the mower around obstacles for better directional control. Be careful when mowing over obstacles embedded in the lawn, such as sprinkler heads, paving, edging, raised tree roots, etc. Avoid anything that sticks up above the surface of the lawn.

If a blade hits something or the mower starts to vibrate, stop the engine immediately, disconnect the spark plug cap, and check for damage (page 9). Striking objects may damage the blades, bend the crankshaft, and/or break the mower deck or other components. Vibration usually indicates serious trouble.

⚠ WARNING

A worn, cracked, or damaged blade can break, and pieces of the damaged blade can become dangerous projectiles.

Thrown objects can cause serious injury.

Inspect the blades regularly, and do not operate the mower with a worn or damaged blade.

The *DISTRIBUTOR'S LIMITED WARRANTY* (page 19) does not cover parts damaged by collision.

Gravel and Loose Objects

Gravel, loose stones, and landscaping material can be picked up by the mower and thrown many feet with enough force to cause serious personal injury and/or property damage. The best way to prevent potential injury from thrown objects is to release the blade control lever to stop the engine, and then push the mower across areas with gravel, loose stones, or landscaping material.

SERVICING YOUR LAWN MOWER

Good maintenance is essential for safe, economical, trouble-free operation. It will also help reduce air pollution.

⚠ WARNING

Improper maintenance or failure to correct a problem before operation can cause a malfunction in which you can be seriously hurt or killed.

Always follow the inspection and maintenance recommendations and schedules in this owner's manual.

To help you properly care for your mower, the following pages include a maintenance schedule, routine inspection procedures, and simple maintenance procedures using basic hand tools. Other service tasks that are more difficult or require special tools are best handled by professionals and are normally performed by a Honda technician or other qualified mechanic.

The maintenance schedule applies to normal operating conditions. If you operate your mower under severe conditions, such as sustained high-load or high-temperature operation, or use in unusually wet or dusty conditions, consult your servicing dealer for recommendations applicable to your individual needs and use.

Remember that an authorized Honda servicing dealer knows your mower best and is fully equipped to maintain and repair it.

To ensure the best quality and reliability, use only new, Honda Genuine parts or their equivalents for repair and replacement.

Maintenance, replacement, or repair of the emission control devices and systems may be performed by any engine repair establishment or individual, using parts that are "certified" to EPA standards.

MAINTENANCE SAFETY

Some of the most important safety precautions follow. However, we cannot warn you of every conceivable hazard that can arise in performing maintenance. Only you can decide whether or not you should perform a given task.

⚠ WARNING

Failure to properly follow maintenance instructions and precautions can cause you to be seriously hurt or killed.

Always follow the procedures and precautions in this owner's manual.

Safety Precautions

- Make sure the engine is off before you begin any maintenance or repairs. This will eliminate several potential hazards:
  - **Carbon monoxide poisoning from engine exhaust**
    Be sure there is adequate ventilation whenever you operate the engine.
  - **Burns from hot parts**
    Let the engine and exhaust system cool before touching.
  - **Injury from moving parts**
    Do not run the engine unless instructed to do so.

- Read the instructions before you begin, and make sure you have the tools and skills required.
- To reduce the possibility of fire or explosion, be careful when working around gasoline. Use only a nonflammable solvent, not gasoline, to clean parts. Keep cigarettes, sparks, and flames away from all fuel-related parts.

MAINTENANCE SCHEDULE

Interval	Item
Before each use	Inspect the blades (page 9) Check the blade bolt torque (page 10) Check the rear shield (page 6) Check the grass bag (page 6) Check the engine oil level (page 11) Check the air cleaner (page 11) Check operation of the blade control cable (page 12)
First month or 5 hours	Change the engine oil (page 11)
First 25 hours	Clean the air filter element (page 11) [1] Adjust the Smart Drive cable [2]
Every 50 hours	Change the engine oil (page 11) [1] Clean the air filter element (page 11) [1] Adjust the Smart Drive cable [2]
Every 100 hours	Change the engine oil (page 11) [1] Clean the air filter element (page 11) [1] Check-adjust the spark plug (page 12) Clean the spark arrester (optional)(page 12) Grease the pinion gears [2] Check the flywheel brake pad [2] Adjust the Smart Drive cable [2]
Every 150 hours	Change the engine oil (page 11) [1] Replace the air cleaner filter (page 11) Replace the spark plug (page 12) Adjust the Smart Drive cable [2] Adjust the valve clearance [2] Adjust the idle speed [2] Clean the fuel tank [2]
After every 250 hours	Clean the combustion chamber [2]
Every 2 years	Check the fuel line and replace if necessary [2]

1. Service more frequently when used in dusty areas.
2. These items should be serviced by an authorized Honda servicing dealer unless you have the proper tools and are mechanically proficient. Refer to the Honda shop manual for service procedures.

Failure to follow this maintenance schedule could result in non-warrantable failures.

BLADES

Inspection

1. Move the fuel valve to the OFF position (page 7) and disconnect the spark plug cap from the spark plug (page 12).
2. Tilt the mower to the right so the fuel cap is up. This will help prevent fuel leakage, motor oil seeping into the air filter and hard starting.

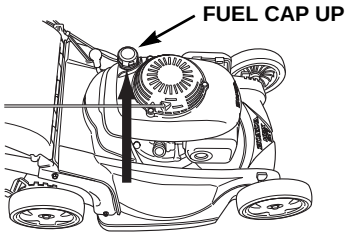

3. Inspect the blades for damage, cracks, and excessive wear, rust, or corrosion.

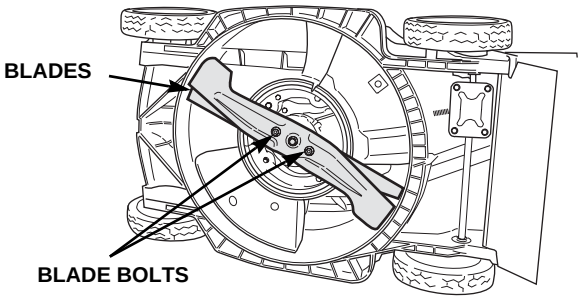

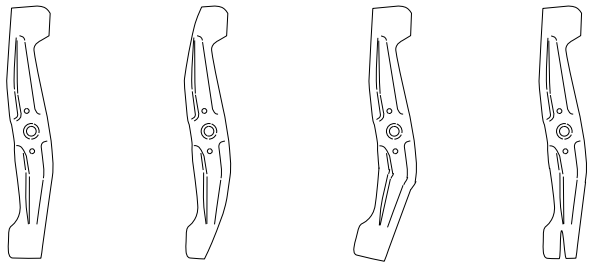

⚠ WARNING

A worn, cracked, or damaged blade can break, and pieces of the damaged blade can become dangerous projectiles.

Thrown objects can cause serious injury.

Inspect the blades regularly, and do not operate the mower with a worn or damaged blade.

A dull blade can be sharpened, but a blade that is excessively worn, bent, cracked, or otherwise damaged must be replaced. A worn or damaged blade can break, causing blade pieces to be thrown from the mower.

If a blade is bent, take the lawn mower to an authorized Honda servicing dealer for inspection.

4. Always use a torque wrench when installing the blades. Check that the blade bolts are tight.

Blade Removal and Installation

If you remove the blades for sharpening or replacement, you will need a torque wrench for installation. Wear heavy gloves to protect your hands.

BLADE SHARPENING: To avoid weakening the blades or causing imbalance or poor cutting, the blades should be sharpened by trained staff at an authorized Honda servicing dealer.

BLADE REPLACEMENT: Use Honda Genuine replacement blades or their equivalent (page 18).

Blade Removal

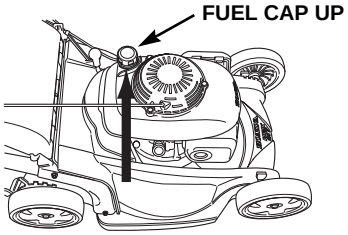

1. Turn the fuel valve OFF. Disconnect the spark plug cap (page 12), and then tilt the mower to the right side (from the operator's point of view) so the fuel filler cap is up. This will help prevent fuel leakage, motor oil seeping into the air filter, and hard starting.
2. Remove the two blade bolts with a 14 mm (6 point) socket wrench. Use a wooden block to prevent the blades from turning when removing the bolts. Remove the blades.

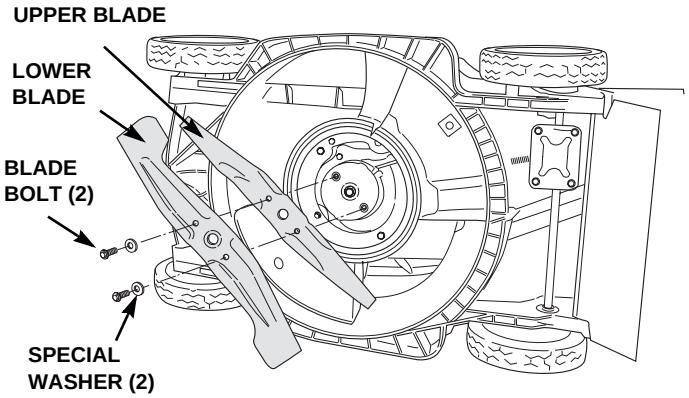

Blade Installation

1. Clean dirt and grass from around the blade mounting area.
2. Install both blades using the two blade bolts and special washers as shown. Be sure to install the special washers with the concave side toward the blades and the convex side toward the bolts.

⚠ WARNING

Operating this mower with only one blade will result in an improperly seated blade that can be thrown from the mower and seriously hurt or kill someone.

Always use both blades as a set.

The blade bolts and washers are specially designed for this application. When replacing bolts and washers, use only Honda Genuine replacement parts.

3. Tighten the blade bolts with a torque wrench. Use a wooden block to prevent the blades from turning when tightening the bolts.

   Blade bolt torque: 36 ~ 43 ft-lb (49 ~ 59 N·m)

   If you do not have a torque wrench, have an authorized Honda servicing dealer tighten the blade bolts before you use the mower. If the blade bolts are overtightened, they could break.

   If the blade bolts are not tightened enough, they could loosen or come out. In either case, it would be possible for the blades to fly off while you are operating the mower.

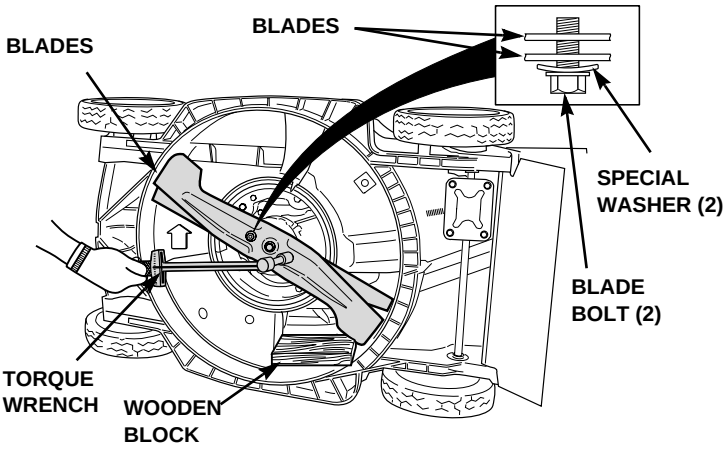

GRASS BAG CLEANING AND REPLACEMENT

Cleaning

Wash the bag with a garden hose and allow it to dry completely before use; a wet bag will clog quickly.

Replacement

Replace a worn or damaged bag with a Honda Genuine replacement bag or equivalent.

Removal

1. Unclip the plastic edges of the bag from the frame.
2. Remove the bag from the frame.

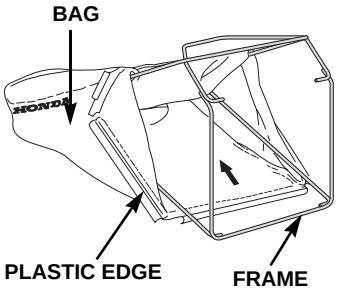

Installation

1. Insert the bag frame into the bag, as shown.
2. Clip the plastic edges of the bag onto the frame, as shown.

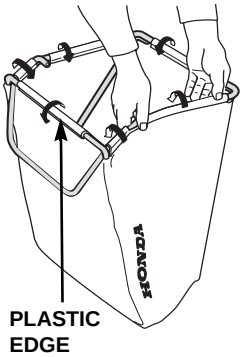

ENGINE MAINTENANCE

Engine Oil Level Check

1. Unscrew and remove the filler cap/dipstick and wipe it clean. Insert and remove the dipstick **without screwing it into the filler neck**. Check the oil level shown on the dipstick.

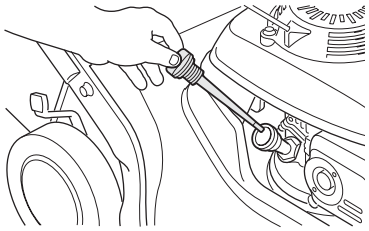

2. If the oil level is low, add oil to reach the upper limit mark on the dipstick. Do not overfill. If the engine is overfilled, the excess oil may get transferred to the air cleaner housing and air cleaner filter.

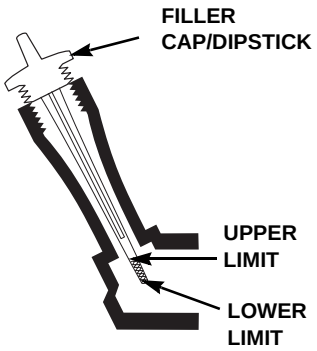

NOTICE

Running the engine with a low oil level can cause engine damage.

3. Screw in the filler cap/dipstick securely.

Engine Oil Recommendations

Oil is a major factor affecting performance and service life. Use 4-stroke automotive detergent oil.

Always change the oil in accordance with the maintenance schedule on page 9.

SAE 10W-30 is recommended for general use. Other viscosities shown in the chart may be used when the average temperature in your area is within the recommended range.

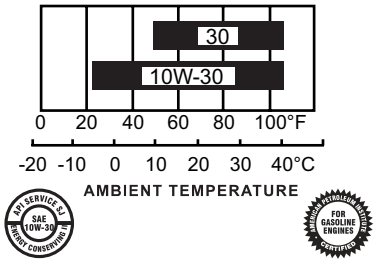

The SAE oil viscosity and service category are in the API label on the oil container. Honda recommends that you use API service category SJ or later oil.

Engine Oil Change

Drain the used oil while the engine is warm. Warm oil drains quickly and completely.

1. Turn the fuel valve OFF (page 7). This will reduce the possibility of fuel leakage.
2. Wipe the oil filler area clean, and then remove the oil filler cap/dipstick.
3. Place a suitable container next to the mower to catch the used oil, and then tilt the mower on its right side.

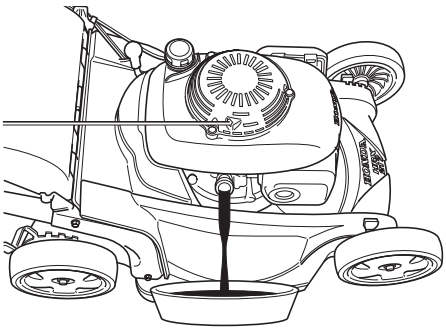

The used oil will drain through the filler neck. Allow the oil to drain completely.

Please dispose of used motor oil and the container in a manner that is compatible with the environment. We suggest you take it in a sealed container to your local recycling center or service station for reclamation. Do not throw it in the trash, pour it on the ground, or pour it down a drain.

4. Fill with the recommended oil. Do not overfill. Allow a couple of minutes for the oil to settle in the engine, then measure the oil level as shown previously.

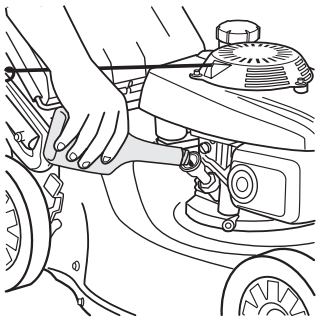

NOTICE

Using nondetergent oil can shorten the engine's service life, and using 2-stroke oil can damage the engine.

Air Cleaner Service

A dirty air filter restricts air flow to the carburetor, reducing engine performance. If you operate the mower in very dusty areas, clean the air filter more often than specified in the *MAINTENANCE SCHEDULE* (page 9).

NOTICE

Operating the engine without an air filter or with a damaged filter allows dirt to enter the engine, causing rapid engine wear. This type of damage is not covered by the DISTRIBUTOR'S LIMITED WARRANTY *(page 19).*

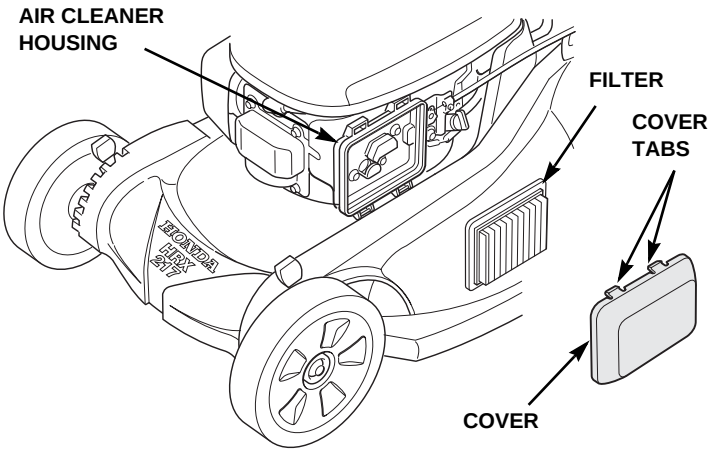

1. Press down on the cover tabs and remove the cover.
2. Remove the filter from the air cleaner housing.
3. Inspect the filter, and replace it if it is damaged.
4. Clean the filter by tapping it several times on a hard surface to remove dirt, or blow compressed air (not exceeding 30 psi [207 kPa]) through the filter from the inside. Never try to brush off dirt; brushing will force dirt into the fibers.
5. Use a moist rag to wipe dirt from the inside of the air cleaner housing and cover. Be careful to prevent dirt from entering the air duct that leads to the carburetor.
6. Reinstall the filter and cover.

Spark Plug Service

RECOMMENDED SPARK PLUG	NGK	BPR5ES

NOTICE

An incorrect spark plug can cause engine damage.

For good performance, the spark plug must be properly gapped and free of deposits.

1. Disconnect the spark plug cap, and remove any dirt from around the spark plug area.

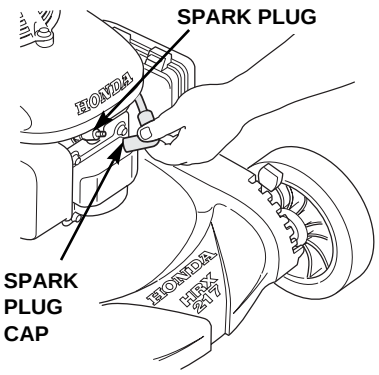

2. Remove the spark plug with a 13/16 in (21 mm) spark plug wrench.
3. Inspect the spark plug. Replace it if the electrodes are worn or if the insulator is cracked, chipped, or fouled.

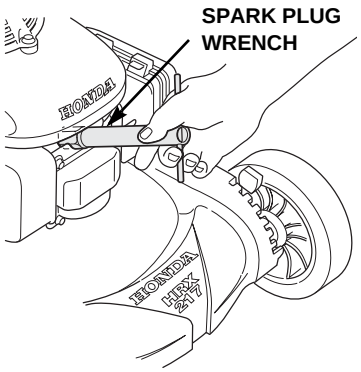

4. Measure the spark plug electrode gap with a suitable gauge. The gap should be 0.028 ~ 0.031 in (0.7 ~ 0.8 mm). Correct the gap, if necessary, by carefully bending the side electrode.

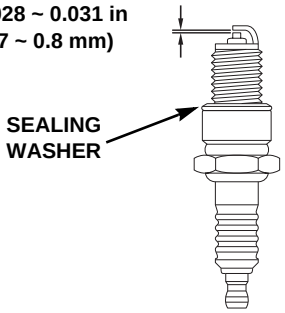

5. Install the spark plug carefully, by hand, to avoid cross-threading.
6. After the spark plug seats, tighten with a 13/16 in (21 mm) spark plug wrench to compress the washer.

   If reinstalling the old spark plug, tighten 1/8 to 1/4 turn after the spark plug seats.

   If installing a new spark plug, tighten 1/2 turn after the spark plug seats to compress the sealing washer.

   NOTICE

   A loose spark plug can overheat and damage the engine. Overtightening the spark plug can damage the threads in the cylinder head.
7. Install the spark plug cap on the spark plug.

Spark Arrester Service (optional equipment)

Your lawn mower engine is not factory-equipped with a spark arrester. In some areas, it is illegal to operate an engine without a spark arrester. Check local laws and regulations. An optional USDA approved spark arrester is available from an authorized Honda servicing dealer. See page 18 for part numbers.

The spark arrester must be serviced every 100 hours to keep it functioning as designed.

1. Allow the engine to cool and disconnect the spark plug cap.
2. Remove the three flange bolts and the heat shield. Remove the set screw and the spark arrester from the muffler.

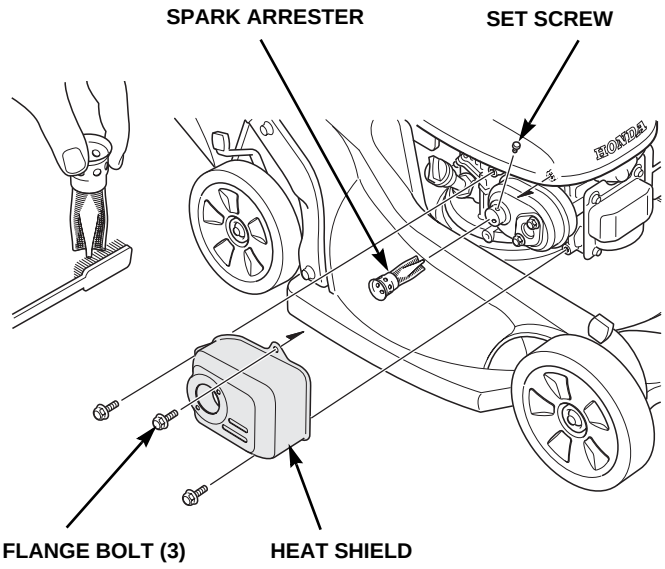

3. Inspect the spark arrester; replace it if the screen is damaged.
4. Check for carbon deposits on the spark arrester and the exhaust port. Brush carbon deposits away. Be careful to avoid damaging the spark arrester screen.
5. Installation is the reverse of removal. Tighten all hardware securely.
6. Reconnect the spark plug cap.

Blade Control Operation Check

Start the engine outdoors. Release the blade control lever; the engine should stop quickly. If the engine does not stop quickly, take the mower to an authorized Honda servicing dealer for repair.

REFUELING

Honda recommends using a No-Spill® gas can (page 18) that meets the stringent requirements of the California Air Resources Board.

This engine is certified to operate on unleaded gasoline with a pump octane rating of 86 or higher.

Refuel in a well-ventilated area with the engine stopped. If the engine has been running, allow it to cool first. Never refuel the engine inside a building where gasoline fumes may reach flames or sparks.

You may use regular unleaded gasoline containing no more than 10% ethanol (E10) or 5% methanol by volume. In addition, methanol must contain cosolvents and corrosion inhibitors. Use of fuels with content of ethanol or methanol greater than shown above may cause starting and/or performance problems. It may also damage metal, rubber, and plastic parts of the fuel system. Engine damage or performance problems that result from using a fuel with percentages of ethanol or methanol greater than shown above are not covered by warranty.

If your equipment will be used on an infrequent or intermittent basis, please refer to the fuel section of the *STORAGE* chapter (page 14) for additional information.

⚠ WARNING

Gasoline is highly flammable and explosive, and you can be burned or seriously injured when refueling.

- Stop the engine and keep heat, sparks, and flame away.
- Refuel only outdoors.
- Wipe up spills immediately.

Never use stale or contaminated gasoline or an oil/gasoline mixture. Avoid getting dirt or water in the fuel tank.

NOTICE

Fuel can damage paint and plastic. Be careful not to spill fuel when filling your fuel tank. Damage caused by spilled fuel is not covered by the DISTRIBUTOR'S LIMITED WARRANTY *(page 19).*

Adding Fuel

1. Remove the fuel tank cap.
2. Add fuel to the bottom of the fuel level limit in the neck of the fuel tank. Do not overfill. Wipe up spilled fuel before starting the engine.

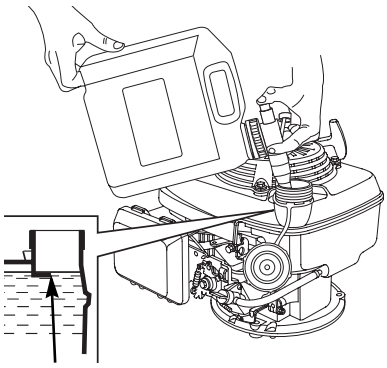

MAXIMUM FUEL LEVEL

3. Secure the fuel tank cap. Tighten the cap until it clicks.

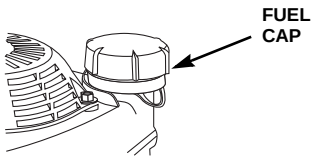

Move the mower at least 10 feet (3 meters) away from the fueling source and site before starting the engine.

TRANSPORTING

If the engine has been running, allow it to cool for at least 15 minutes before loading the mower onto the transport vehicle. A hot engine and exhaust system can burn you and ignite some materials.

1. Turn the fuel valve to the OFF position. This will prevent carburetor flooding and reduce the possibility of fuel leakage.
2. If installed, remove the grass bag.

If a suitable loading ramp is not available, two people should lift the mower onto and off the transport vehicle while holding the mower level.

Position the mower so all four wheels are on the bed of the transport vehicle. Tie the mower down with rope or straps and block the wheels. Keep the tie-down rope or straps away from the controls, adjustment levers, cables, and the carburetor.

The handlebar can be folded so the mower will take up less space.

STORAGE

PREPARING FOR STORAGE

Proper storage preparation is essential for keeping your lawn mower trouble free and looking good. The following steps will help keep rust and corrosion from impairing your lawn mower's function and appearance, and will make the engine easier to start when you use the lawn mower again.

Cleaning

Engine

Wash the engine by hand, and be careful to prevent water from entering the air cleaner.

NOTICE

Using a garden hose or pressure washing equipment can force water into the air cleaner. Water in the air cleaner will soak the paper filter and can enter the carburetor or engine cylinder, causing damage. Water contacting a hot engine can cause damage. If the engine has been running, allow it to cool for at least half an hour before washing.

Mower Deck

Wash the lawn mower, including the underside of the mower deck.

If using a garden hose or pressure washing equipment to clean the mower deck, be careful to avoid getting water into controls and cables, or anywhere near the engine air cleaner or muffler opening.

Before washing the underside of the mower deck, be sure the fuel valve is in the OFF position. Disconnect the spark plug cap. Rest the mower on its right side so the fuel filler cap is up. This will help prevent fuel leakage and hard starting due to carburetor flooding. Wear heavy gloves to protect your hands from the blades.

Grass Bag

Remove the bag from the mower, and wash it with a garden hose or pressure washing equipment. Allow the bag to dry completely before storage.

The grass bag can be stored flat when not in use by unhooking the plastic clips from the fabric bag and pushing the frame lower support legs outward from the eyelets.

Drying

1. After washing the lawn mower, wipe dry all accessible surfaces.
2. With the mower in an upright position, open the Clip Director, start the engine outdoors, and let it run until it reaches normal operating temperature to evaporate any water remaining on the engine.
3. Stop the engine and allow it to cool.
4. After the lawn mower is clean and dry, touch up any damaged paint (touch-up paint part numbers are on page 18) and coat other areas that may rust with a light film of oil.

Fuel

NOTICE

Depending on the region where you operate your equipment, fuel formulations may deteriorate and oxidize rapidly. Fuel deterioration and oxidation can occur in as little as 30 days and may cause damage to the carburetor and fuel system. Please contact your servicing dealer for local storage recommendations.

Gasoline will oxidize and deteriorate in storage. Old gasoline will cause hard starting, and it leaves gum deposits that clog the fuel system. If the gasoline in your mower deteriorates during storage, you may need to have the carburetor and other fuel system components serviced or replaced.

The length of time that gasoline can be left in your fuel tank and carburetor without causing functional problems will vary with such factors as gasoline blend, your storage temperatures, and whether the fuel tank is partially or completely filled. The air in a partially filled fuel tank promotes fuel deterioration. Very warm storage temperatures accelerate fuel deterioration. Fuel deterioration problems may occur within a few months, or even less if the gasoline was not fresh when you filled the fuel tank.

To prevent fuel related problems:

1. Add gasoline stabilizer following the manufacturer's instructions.

   When adding a gasoline stabilizer, fill the fuel tank with fresh gasoline. If only partially filled, air in the tank will promote fuel deterioration during storage.
2. After adding a gasoline stabilizer, run the engine outdoors for 10 minutes to be sure that treated gasoline has replaced the untreated gasoline in the fuel system.
3. Turn the fuel valve to the OFF position.
4. Continue to run the engine until it stops from lack of fuel in the carburetor fuel bowl. Running time should be less than 3 minutes.

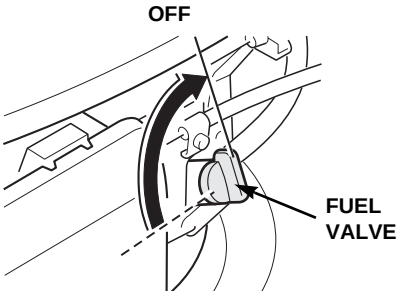

The *DISTRIBUTOR'S LIMITED WARRANTY* (page 19) does not cover fuel system damage or engine performance problems resulting from neglected storage preparation.

Engine Oil

Change the engine oil (page 11).

Engine Cylinder

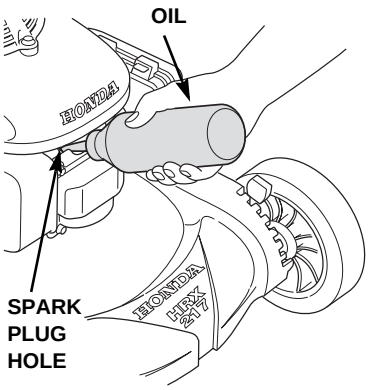

1. Remove the spark plug (page 12).
2. Pour a teaspoon (5 ~ 10 cc) of clean engine oil into the cylinder. This will prevent rust from developing inside the engine.
3. Press and hold the blade control lever; then pull the starter rope several times to distribute the oil in the cylinder.
4. Reinstall the spark plug.
5. Press and hold the blade control lever, pull the starter rope slowly until resistance is felt, and then return the starter grip gently. This will close the valves so moisture cannot enter the engine cylinder.

Handlebar Folding

The handlebar can be folded for storage or transport by unlocking the handlebar adjust knobs.

1. Remove the grass bag. You can place it on top of the engine, with the bag opening to the front.

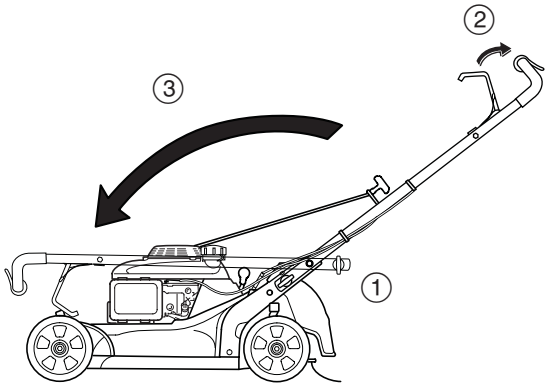

2. Unlock the handlebar adjust knobs [1] (page 3).
3. Press and hold the blade control lever [2].
4. Swing the handlebar forward [3]. Prevent the cables from getting pinched or kinked.

   When unfolding the handlebar, be sure to lock the adjust knobs to secure the handlebar in the mowing position.

PLACING IN STORAGE

Since your mower will be stored with gasoline in the fuel tank, it is important to reduce the hazard of gasoline vapor ignition. Select a well-ventilated storage area away from any appliance that operates with a flame, such as a furnace, water heater, or clothes dryer. Also avoid any area with a spark-producing electric motor or where power tools are operated.

If possible, avoid storage areas with high humidity because humidity promotes rust and corrosion.

Make sure the fuel valve is in the OFF position to reduce the possibility of fuel leakage.

Place the mower with its wheels on a level surface. Tilting can cause fuel or oil leakage.

The handlebar can be folded for compact storage.

With the engine and exhaust system cool, cover the mower to keep out dust. A hot engine and exhaust system can ignite or melt some materials. Do not use sheet plastic as a dust cover. A nonporous cover will trap moisture around the mower, promoting rust and corrosion. Honda recommends using the optional stretch fabric storage cover (page 18).

REMOVING FROM STORAGE

Check your mower as described in *BEFORE OPERATION* (page 4).

If the cylinder was coated with oil during storage preparation, the engine will smoke briefly at startup. This is normal.

TAKING CARE OF UNEXPECTED PROBLEMS

Engine Will Not Start

Possible Cause	Correction
Fuel valve OFF	Turn the fuel valve ON (page 7).
Out of fuel	Refuel (page 13).
Bad fuel, mower was stored without treating the gasoline, or refueled with bad gasoline	Refuel with fresh gasoline (page 13).
Spark plug faulty, fouled, or improperly gapped	Gap or replace the spark plug (page 12).
Spark plug wet with fuel (flooded engine)	Dry and reinstall the spark plug.
Fuel filter clogged, carburetor malfunction, ignition malfunction, valves stuck, etc.	Take the mower to an authorized Honda servicing dealer for repair.

Loss of Power

Possible Cause	Correction
Grass too tall or wet	Raise the cutting height (page 8), cut a narrower swath, use a slower ground speed, cut more frequently when the grass is dry, or move the Clip Director knob toward the BAG position (page 5).
Mower deck clogged	Clean out the mower deck.
Air filter clogged	Clean or replace the air filter (page 11).
Bad fuel, mower was stored without treating the gasoline, or refueled with bad gasoline	Refuel with fresh gasoline (page 13).
Fuel filter clogged, carburetor malfunction, ignition malfunction, valves stuck, etc.	Take the mower to an authorized Honda servicing dealer for repair.

Vibration

Possible Cause	Correction
Grass and debris lodged under the mower deck	Clean out the mower deck.
Blades loose, bent, damaged, or unbalanced by improper sharpening	Tighten loose blade bolts (page 10). If blades are found to be bent or damaged, take the lawn mower to an authorized Honda servicing dealer for inspection (page 9).
Mechanical damage, such as a bent crankshaft	Take the mower to an authorized Honda servicing dealer for repair.

Mowing and Bagging Problems

Possible Cause	Correction
Mower is moving too fast for lawn conditions	Reduce the pressure on the Smart Drive control to slow the mower (page 5).
Cutting height adjustment levers set at different positions	Set all levers at the same cutting height position (page 6).
Grass bag overfilled or clogged	Empty the grass bag. Wash the grass bag if it is clogged with dirt (page 10).
Mower deck clogged	Clean out the mower deck.
Blades dull, worn, or damaged	Sharpen or replace the blades if necessary (page 9).
Wrong blades installed	Install correct blades (page 9).

TECHNICAL INFORMATION

SERIAL NUMBER LOCATIONS

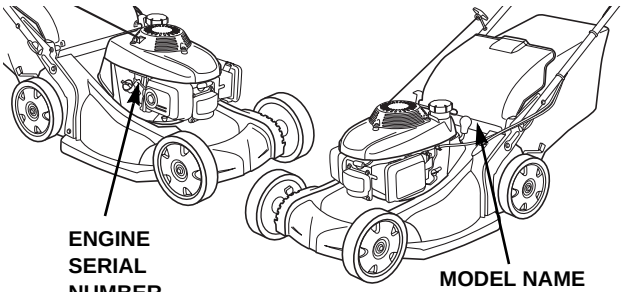



There are two serial numbers, one for the engine and one for the mower frame. Record the engine and frame serial numbers in the space below. You will need these serial numbers when ordering parts and when making technical or warranty inquiries (page 18).

Engine serial number: _____

Frame serial number: _____

Date of purchase: _____

CARBURETOR MODIFICATION FOR HIGH ALTITUDE OPERATION

At high altitude, the standard carburetor air-fuel mixture will be too rich. Performance will decrease, and fuel consumption will increase. A very rich mixture will also foul the spark plug and cause hard starting. Operation at an altitude that differs from that at which this engine was certified, for extended periods of time, may increase emissions.

High altitude performance can be improved by specific modifications to the carburetor. If you always operate your lawn mower at altitudes above 5,000 feet (1,500 meters), have your servicing dealer perform this carburetor modification. This engine when operated at high altitude with the carburetor modifications for high altitude use will meet each emission standard throughout its useful life.

Even with carburetor modification, engine horsepower will decrease about 3.5% for each 1,000-foot (300-meter) increase in altitude. The effect of altitude on horsepower will be greater than this if no carburetor modification is made.

NOTICE

When the carburetor has been modified for high altitude operation, the air-fuel mixture will be too lean for low altitude use. Operation at altitudes below 5,000 feet (1,500 meters) with a modified carburetor may cause the engine to overheat and result in serious engine damage. For use at low altitudes, have your servicing dealer return the carburetor to original factory specifications.

EMISSION CONTROL SYSTEM

Source of Emissions

The combustion process produces carbon monoxide, oxides of nitrogen, and hydrocarbons. Control of hydrocarbons and oxides of nitrogen is very important because, under certain conditions, they react to form photochemical smog when subjected to sunlight. Carbon monoxide does not react in the same way, but it is toxic.

Honda utilizes appropriate air/fuel ratios and other emissions control systems to reduce the emissions of carbon monoxide, oxides of nitrogen, and hydrocarbons. Additionally, Honda fuel systems utilize components and control technologies to reduce evaporative emissions.

The U.S., California Clean Air Act, and Environment Canada

EPA, California, and Canadian regulations require all manufacturers to furnish written instructions describing the operation and maintenance of emissions control systems.

The following instructions and procedures must be followed in order to keep the emissions from your Honda engine within the emissions standards.

Tampering and Altering

Tampering with or altering the emissions control system may increase emissions beyond the legal limit. Among those acts that constitute tampering are:

- Removing or altering any part of the intake, fuel, or exhaust systems.
- Altering or defeating the speed-adjusting mechanism to cause the engine to operate outside its design parameters.

Problems That May Affect Emissions

If you are aware of any of the following symptoms, have your engine inspected and repaired by your servicing dealer.

- Hard starting or stalling after starting
- Rough idle
- Misfiring or backfiring under load
- Afterburning (backfiring)
- Black exhaust smoke or high fuel consumption

Replacement Parts

The emissions control systems on your new Honda engine were designed, built, and certified to conform with EPA, California, and Canadian emissions regulations. We recommend the use of Honda Genuine parts whenever you have maintenance done. These original-design replacement parts are manufactured to the same standards as the original parts, so you can be confident of their performance. The use of replacement parts that are not of the original design and quality may impair the effectiveness of your emissions control system.

A manufacturer of an aftermarket part assumes the responsibility that the part will not adversely affect emissions performance. The manufacturer or rebuilder of the part must certify that use of the part will not result in a failure of the engine to comply with emissions regulations.

Maintenance

Follow the *MAINTENANCE SCHEDULE* on page 9. Remember this schedule is based on the assumption that your machine will be used for its designed purpose. Sustained high-load or high-temperature operation or use in unusually wet or dusty conditions will require more frequent service.

AIR INDEX

An Air Index Information hang tag/label is applied to engines certified to an emission durability time period in accordance with the requirements of the California Air Resources Board.

The bar graph is intended to provide you, our customer, the ability to compare the emissions performance of available engines. The lower the Air Index, the less pollution.

The durability description is intended to provide you with information relating the engine's emission durability period. The descriptive term indicates the useful life period for the engine's emission control system. See your *EMISSION CONTROL SYSTEM WARRANTY* (page 20) for additional information.

Descriptive Term	Applicable to Emissions Durability Period
Moderate	50 hours (0 ~ 80 cc) 125 hours (greater than 80 cc)
Intermediate	125 hours (0 ~ 80 cc) 250 hours (greater than 80 cc)
Extended	300 hours (0 ~ 80 cc) 500 hours (greater than 80 cc) 1000 hours (225 cc and greater)

SPECIFICATIONS

Mower Model

HRX217K2VKA	Honda rotary mower, grass bag, 21-inch mower deck, Clip Director, variable speed transmission, flywheel brake, fully automatic choke

Maintenance

Fuel	Unleaded gasoline with a pump octane rating of 86 or higher.	page 13
Engine oil	SAE 10W-30, API SJ or later	page 11
Spark plug type	NGK BPR5ES	page 12
Maximum governed speed	* 2,950 ~ 3,100 rpm	Shop manual
Blade bolt torque	36 ~ 43 ft-lb (49 ~ 59 N•m)	page 10

* Do not try to increase the engine speed above the maximum governed speed; the blades could fracture and come apart.

Tuneup

Spark plug gap	0.028 ~ 0.031 in (0.7 ~ 0.8 mm)	page 12
Valve clearance (cold)	Intake:0.15 ± 0.04 mm Exhaust:0.20 ± 0.04 mm	Shop manual
Other specifications	No other adjustments needed.	

Dimensions, Weights, and Capacities

Overall length	63.8 in (1621 mm)
Width at mower deck	23 in (585 mm)
Overall height	38.4 in (976 mm)
Dry weight	88.6 lb (40.2 kg)
Wheelbase [cutting height adjusters set to 1-1/4 in (32 mm)]	26.7 in (678 mm)
Cutting width	21 in (530 mm)
Approximate cutting height (7 adjustable positions)	3/4, 1-1/4, 2, 2-1/2, 3, 3-1/2, 4 in (20, 32, 46, 62, 75, 88, 100 mm)
Fuel tank capacity	0.25 US gal (0.93 ℓ)
Engine oil capacity	18.6 oz (0.55 ℓ) ** Refill amount: 12.0 ~ 13.5 oz (0.35 ~ 0.40 ℓ)
Grass bag capacity	23 US gal (2.5 bushels; 3.1 cu ft; 88 ℓ)

** Actual amount will vary based on residual oil in the engine. Always use the dipstick to confirm the actual level (see page 11).

Engine Design and Performance

Engine model	GCV190
Engine type	4-stroke, overhead-cam, single-cylinder, forced air-cooled
Displacement	11.4 cu in (187 cc)
Bore and stroke	2.71 x 1.97 in (69 x 50 mm)
Compression ratio	8.5:1
Ignition system	Transistorized magneto

Transmission Design and Performance

Transmission type	Variable speed, thumb or hand operation (twist grip) Smart Drive
Mower ground speed (engine at 3,100 rpm)	0 ~ 3.6 mph (0 ~ 1.6 m/s)

CONSUMER INFORMATION

REPLACEMENT PARTS, OPTIONAL EQUIPMENT, AND SERVICE ITEMS

Contact an authorized Honda servicing dealer to purchase any of these (or other) Honda Genuine items for your lawn mower.

Replacement Parts

Item	Part Number	Notes
Spark plug	98079-55846	NGK (brand) BPR5ES
Air filter	17211-ZL8-023	Paper
Lower blade	72511-VH7-000	Always use an upper and lower blade as a set.
Upper blade	72531-VH7-000	
Grass bag	81320-VH7-810	Fabric bag only, no frame
Wheel/tire	42710-VH7-000ZA	Rear
	44710-VH7-000ZA	Front

Optional Equipment

Item	Part Number	Notes
Spark arrester kit	06180-Z0J-000	Includes spark arrester, ID plate, and screw
Mower deck guard kit	06761-VH7-000AH	Protects the side of the mower deck when mowing against curbs
Universal lawn mower cover	08P59-VE2-000AH	Custom fitted, waterproof, and breathable

Service Items

Item	Part Number	Notes
SAE 10W-30 engine oil	08207-10W30	1 Quart
No-Spill® gas can	06176-1450	5 gallon
Fuel stabilizer	08732-0001	For long-term storage
Matte black touch-up paint (aerosol can)	08707-NH105	For handlebar only

DEALER LOCATOR INFORMATION

To find an Authorized Honda Servicing Dealer anywhere in the United States:

Visit our website:

www.hondapowerequipment.com and click on Dealer Locator.

CUSTOMER SERVICE INFORMATION

Honda Power Equipment dealership personnel are trained professionals. They should be able to answer any question you may have. If you encounter a problem that your dealer does not solve to your satisfaction, please discuss it with the dealership's management. The Service Manager or General Manager can help. Almost all problems are solved in this way.

If you are dissatisfied with the decision made by the dealership's management, contact the Honda Power Equipment Customer Relations Office. You can write:

American Honda Motor Co., Inc.
Power Equipment Division
Customer Relations Office
4900 Marconi Drive
Alpharetta, GA 30005-8847

Telephone: (770) 497-6400 M-F, 8:30 a.m. - 7:00 p.m. ET

When you write or call, please give us this information:

- Model and serial numbers (page 16)
- Name of the dealer who sold the lawn mower to you
- Name and address of the dealer who services your lawn mower
- Date of purchase
- Your name, address, and telephone number
- A detailed description of the problem

Honda Publications

These publications give you additional information for maintaining and repairing your lawn mower.

Shop Manual—This manual covers complete maintenance and overhaul procedures. It is intended to be used by a skilled technician. Available through your Honda dealer or through Helm Inc. at (888) 292-5395 or visit www.hondapowerequipment.com and click on Product Manuals.

Parts Catalog—This manual provides complete illustrated parts lists and is available through your Honda dealer.

Frequently Asked Questions—The Honda Power Equipment web site provides additional information for users of Honda equipment. Visit www.hondapowerequipment.com and click on FAQs.

DISTRIBUTOR'S LIMITED WARRANTY

This warranty is limited to the following Honda Power Equipment products when distributed by American Honda Motor Co., Inc., Power Equipment Division, 4900 Marconi Drive, Alpharetta, Georgia 30005-8847.

PRODUCTS COVERED BY THIS WARRANTY	LENGTH OF WARRANTY (from date of original retail purchase)	
	PRIVATE RESIDENTIAL (1)	COMMERCIAL/ RENTAL/INSTITUTIONAL
HRX Lawn mowers	36 months	3 months
HRX Mower decks	Limited lifetime (2)	3 months

(1) Private residential: Used in maintaining owner's primary and/or secondary residence. Any other use, including but not limited to informal "for hire" use, is considered commercial/rental/institutional use.

(2) Limited lifetime HRX mower deck warranty applies to lawn mowers purchased on or after November 1, 2006. Deck warranty is valid for the original purchaser only.

To Qualify for This Warranty:

The product must be purchased in the United States, Puerto Rico, or the U.S. Virgin Islands from American Honda or a dealer authorized by American Honda to sell those products. This warranty applies to the first retail purchaser and each subsequent owner during the applicable warranty time period.

What American Honda Will Repair or Replace Under Warranty:

American Honda will repair or replace, at its option, any part that is proven to be defective in material or workmanship under normal use during the applicable warranty time period. Warranty repairs and replacements will be made without charge for parts or labor. Anything replaced under warranty becomes the property of American Honda Motor Company, Inc. All parts replaced under warranty will be considered as part of the original product, and any warranty on those parts will expire coincident with the original product warranty.

To Obtain Warranty Service:

You must take the Honda Power Equipment product, accessory, replacement part, apparel, or the power equipment on which the accessory or replacement part is installed, and proof of purchase, at your expense, to any Honda Power Equipment dealer in the United States, Puerto Rico, or the U.S. Virgin Islands who is authorized to sell that product, during the dealer's normal business hours. If you are unable to obtain warranty service or are dissatisfied with the warranty service you receive, take the following steps: First, contact the owner of the dealership involved; normally this will resolve the problem. However, if you should require further assistance, write or call the Power Equipment Customer Relations Department of American Honda Motor Co., Inc.

American Honda Motor Co., Inc.
Power Equipment Customer Relations Dept.
4900 Marconi Drive
Alpharetta, GA 30005-8847 Telephone: (770) 497-6400

Exclusions:

This warranty does not extend to parts affected or damaged by collision, normal wear, fuel contamination or deterioration, use in an application for which the product was not designed or any other misuse, neglect, incorporation or use of unsuitable attachments or parts, unauthorized alteration, or any causes other than defects in material or workmanship of the product.

Any product that has ever been declared a total loss or sold for salvage by a financial institution or insurer.

The auger and paddle assemblies of snowthrowers, tiller tines of roto-tillers, mower blades and mower deck housings, are specifically not warranted against impact damage, including but not limited to, abrasive damage.

Disclaimer of Consequential Damage and Limitation of Implied Warranties:

American Honda disclaims any responsibility for loss of time or use of the product, transportation, commercial loss, or any other incidental or consequential damage. Any implied warranties are limited to the duration of this written limited warranty. Some states do not allow limitations on how long an implied warranty lasts and/or do not allow the exclusion or limitation of incidental or consequential damages, so the above exclusions and limitations may not apply to you. This warranty gives you specific legal rights, and you may also have other rights which vary from state to state.

ACCESSORIES, REPLACEMENT PARTS, AND APPAREL WARRANTY

This warranty is limited to Honda Power Equipment parts, accessories, and apparel when distributed by American Honda Motor Co., Inc., 4900 Marconi Drive, Alpharetta, Georgia 30005-8847.

PRODUCTS COVERED BY THIS WARRANTY	LENGTH OF WARRANTY (from date of original retail purchase)	
	PRIVATE RESIDENTIAL (1)	COMMERCIAL/ RENTAL/INSTITUTIONAL
Accessories	12 months	3 months
Replacement parts	6 months	3 months
Apparel	6 months	3 months

To Qualify for This Warranty:

1. The accessories, replacement parts, or apparel must be purchased from American Honda, or a dealer, distributor, or distributor's dealer authorized by American Honda to sell those products in the United States, Puerto Rico, and the U.S. Virgin Islands. Parts and Accessories must be purchased for installation on original Honda equipment or engines to be eligible for warranty coverage. Installing parts and accessories on non-Honda products or engines voids this warranty.
2. You must be the first retail purchaser. This warranty is not transferable to subsequent owners.

What American Honda Will Repair or Replace Under Warranty:

American Honda will repair or replace, at its option, any Honda Power Equipment accessories, replacement parts, or apparel that are proven to be defective in material or workmanship under normal use during the applicable warranty time period. Anything replaced under warranty becomes the property of American Honda Motor Company, Inc. All parts replaced under warranty will be considered as part of the original product, and any warranty on those parts will expire coincident with the original product warranty.

Accessories and replacement parts installed by a dealer, distributor, or distributor's dealer who is authorized by American Honda to sell them will be repaired or replaced under warranty without charge for parts or labor. If installed by anyone else, accessories and replacement parts will be repaired or replaced under warranty without charge for parts, but any labor charges will be the responsibility of the purchaser. Apparel will be repaired or replaced under warranty without any charge.

To Obtain Warranty Service:

You must take the Honda Power Equipment accessory, replacement part, apparel, or the Honda Power Equipment on which the accessory or replacement part is installed, and proof of purchase, at your expense, to any Honda Power Equipment dealer, distributor, or distributor's dealer in the United States, Puerto Rico, or the U.S. Virgin Islands who is authorized to sell that product, during the dealer's or distributor's normal business hours. If you are unable to obtain warranty service or are dissatisfied with the warranty service you receive, take the following steps: First, contact the owner of the dealership or distributorship involved; normally this will resolve the problem. However, if you should require further assistance, write or call the Power Equipment Customer Relations Department of American Honda Motor Co., Inc. Refer to adjacent column for contact information.

Exclusions:

This warranty does not extend to accessories, parts, or apparel affected or damaged by collision, normal wear, use in an application for which the product was not designed or any other misuse, neglect, incorporation or use of unsuitable attachments or parts, unauthorized alteration, improper installation, or any causes other than defects in material or workmanship of the product. Installing Parts and Accessories on non-Honda products or engines voids this warranty.

Disclaimer of Consequential Damage and Limitation of Implied Warranties:

American Honda disclaims any responsibility for loss of time or use of the product, or the power equipment on which the product is installed, transportation, commercial loss, or any other incidental or consequential damage. Any implied warranties are limited to the duration of this written warranty. Some states do not allow limitations on how long an implied warranty lasts and/or do not allow the exclusion or limitation of incidental or consequential damages, so the above exclusions and limitations may not apply to you. This warranty gives you specific legal rights, and you may also have other rights which vary from state to state.

EMISSION CONTROL SYSTEM WARRANTY

Your new Honda Power Equipment engine complies with the U.S. EPA, Environment Canada, and State of California emission regulations (models certified for sale in California only). American Honda Motor Co., Inc. provides the emission warranty coverage for engines in the United States, and its territories. Honda Canada Inc. provides the emission warranty for engines in the 13 provinces and territories of Canada. In the remainder of this Emission Control System Warranty, American Honda Motor Company Inc. and Honda Canada Inc. will be referred to as Honda.

YOUR WARRANTY RIGHTS AND OBLIGATIONS:

CALIFORNIA

The California Air Resources Board and Honda are pleased to explain the emission control system warranty on your Honda Power Equipment engine. In California, new spark-ignited small off-road equipment engines must be designed, built, and equipped to meet the State's stringent anti-smog standards.

OTHER STATES, U.S. TERRITORIES, AND CANADA

In other areas of the United States and in Canada, your engine must be designed, built, and equipped to meet the U.S. EPA and Environment Canada emission standards for spark-ignited engines at or below 19 kilowatts. Specific Honda products that do not meet the California emissions regulations can be identified by a “Not for sale in California” decal.

ALL OF THE UNITED STATES AND CANADA

Honda must warrant the emission control system on your power equipment engine for the period of time listed below, provided there has been no abuse, neglect, or improper maintenance of your power equipment engine. Where a warrantable condition exists, Honda will repair your power equipment engine at no cost to you including diagnosis, parts, and labor.

Your emission control system may include such parts as the carburetor or fuel injection system, the ignition system, and catalytic converter. Also included may be hoses, connectors, and other emission-related assemblies.

MANUFACTURER'S WARRANTY COVERAGE:

The 1995 and later power equipment engines are warranted for two years or the length of the Honda Distributor’s Warranty, whichever is longer. If any emission-related part on your engine is defective, the part will be repaired or replaced by Honda.

OWNER'S WARRANTY RESPONSIBILITY:

As the power equipment engine owner, you are responsible for the performance of the required maintenance listed in your owner's manual. Honda recommends that you retain all receipts covering maintenance on your power equipment engine, but Honda cannot deny warranty coverage solely for the lack of receipts or for your failure to ensure the performance of all scheduled maintenance.

As the power equipment engine owner, you should however be aware Honda may deny you warranty coverage if your power equipment engine or a part has failed due to abuse, neglect, improper maintenance, or unapproved modifications.

You are responsible for presenting your power equipment engine to a Honda Power Equipment dealer as soon as a problem exists. The warranty repairs should be completed in a reasonable amount of time, not to exceed 30 days.

If you have any questions regarding your warranty rights and responsibilities, you should contact the Honda Office in your region:

American Honda Motor Co., Inc.
Power Equipment Customer Relations
4900 Marconi Drive
Alpharetta, Georgia 30005-8847
Telephone: (770) 497-6400

or

Honda Canada Inc.
Power Equipment Customer Relations
Visit www.honda.ca for
contact information.
Telephone: (888) 946-6329

WARRANTY COVERAGE:

Honda power equipment engines manufactured after January 1, 1995 and sold in the State of California, U.S. EPA certified engines manufactured on or after September 1, 1996 and sold in all of the United States, and Canadian certified engines manufactured on or after January 1, 2005 are covered by this warranty for a period of two years from the date of delivery to the original retail purchaser or the length of the Honda Distributor’s Warranty, whichever is longer. This warranty is transferable to each subsequent purchaser for the duration of the warranty period.

Warranty repairs will be made without charge for diagnosis, parts, or labor. All defective parts replaced under this warranty become the property of Honda.

A list of warranted parts is in the table below. Normal maintenance items, such as spark plugs and filters, that are on the warranted parts list are warranted up to their required replacement interval only.

Honda will also replace other engine components damaged by a failure of any warranted part during the warranty period.

Only Honda approved replacement parts may be used in the performance of any warranty repairs and must be provided without charge to the owner. The use of replacement parts not equivalent to the original parts may impair the effectiveness of your engine emission control system. If such a replacement part is used in the repair or maintenance of your engine, and an authorized Honda dealer determines it is defective or causes a failure of a warranted part, your claim for repair of your engine may be denied. If the part in question is not related to the reason your engine requires repair, your claim will not be denied.

TO OBTAIN WARRANTY SERVICE:

You must take your Honda Power Equipment engine or the product on which it is installed, along with your sales registration card or other proof of original purchase date, at your expense, to any Honda Power Equipment dealer who is authorized by Honda to sell and service that Honda product during his normal business hours. Claims for repair or adjustment found to be caused solely by defects in material or workmanship will not be denied because the engine was not properly maintained and used.

If you are unable to obtain warranty service, or are dissatisfied with the warranty service you received, contact the owner of the dealership involved. Normally this should resolve your problem. However, if you require further assistance, write or call the Honda Power Equipment Customer Relations Department in your region.

EXCLUSIONS:

Failures other than those resulting from defects in material or workmanship are not covered by this warranty. This warranty does not extend to emission control systems or parts which are affected or damaged by owner abuse, neglect, improper maintenance, misuse, misfueling, improper storage, collision, the incorporation of, or any use of, any add-on or modified parts, unsuitable attachments, or the unauthorized alteration of any part.

This warranty does not cover replacement of expendable maintenance items made in connection with required maintenance services after the item's first scheduled replacement as listed in the maintenance section of the product owner's manual, such as: spark plugs and filters.

DISCLAIMER OF CONSEQUENTIAL DAMAGE AND LIMITATION OF IMPLIED WARRANTIES:

American Honda Motor Co., Inc. and Honda Canada Inc. disclaim any responsibility for incidental or consequential damages such as loss of time or the use of the power equipment, or any commercial loss due to the failure of the equipment; and any implied warranties are limited to the duration of this written warranty. This warranty is applicable only where the California, U.S. EPA, or Environment Canada emission control system warranty regulation is in effect.

EMISSION CONTROL SYSTEM WARRANTY PARTS:

SYSTEMS COVERED BY THIS WARRANTY:	PARTS DESCRIPTION:
Fuel Metering	Carburetor assembly, (includes starting enrichment system), Engine temperature sensor, Engine control module, Fuel regulator, Intake manifold
Evaporative	Fuel tank, Fuel cap, Fuel hoses, Vapor hoses, Carbon canister, Canister mounting brackets, Fuel strainer, Fuel cock, Fuel pump, Fuel hose joint, Canister purge hose joint
Exhaust	Catalyst, Exhaust manifold
Air Induction	Air filter housing, Air filter element*
Ignition	Flywheel magneto, Ignition pulse generator, Crankshaft position sensor, Power coil, Ignition coil assembly, Ignition control module, Spark plug cap, Spark plug*
Crankcase Emission Control	Crankcase breather tube, Oil filler cap
Miscellaneous Parts	Tubing, fittings, seals, gaskets, and clamps associated with these listed systems.

Note: This list applies to parts supplied by Honda and does not cover parts supplied by the equipment manufacturer. Please see the original equipment manufacturer’s emissions warranty for non-Honda parts.

* Covered up to the first required replacement only. See the *MAINTENANCE SCHEDULE* on page 9.

NOTES

NOTES

NOTES

HONDA

The Power of Dreams

Printed on
Recycled Paper